City of Torrance, Community Development Department Danny E. Santana, Director
BUILDING & SAFETY DIVISION
3031 Torrance Blvd., Torrance, CA 90503, Phone (310) 618-5910 Fax (310)618-5922

TYPE V SHEET

ONE STORY CONSTRUCTION ONLY

Type V construction is a classification of buildings by construction materials and methods. It is the least restrictive permitted by the Uniform Building Code and includes light, wood-frame construction. This sheet is for information and reference only and is not a substitute for accurate drawings prepared for each proposed construction project. City of Torrance's Type V-sheet is the same as the attached Type V sheet by LARUCP except hereby clarified with respect to note 5 on "Footings on Expansive Soils".

FOOTINGS ON EXPANSIVE SOILS

Footing systems on expansive soil shall be constructed in a manner that will minimize damage to the structure from movement of the soil.

1. Depth of footings below the natural and finished grades shall not be less than 18 inches for exterior and 18 inches for interior footings.
2. Exterior walls and interior bearing walls shall be supported on continuous footings.
3. Footings shall be reinforced with four 1/2-inch diameter deformed reinforcing bars. Two bars shall be placed 4 inches from the bottom of the footing and two bars within 4 inches from the top of the footing.
4. Concrete floor slabs on grade shall be placed on a 4-inch fill of coarse aggregate or on a moisture barrier membrane between (2) 2" layers of sand. The slabs shall be at least 3-12 inches thick and shall be reinforced with 3/8" diameter deformed reinforcing bars. Reinforcing bar shall be spaced at intervals not exceeding 18 inches each way.
5. The soil below an interior concrete slab shall be saturated with a moisture to a depth of 18 inches prior to placing the concrete.

LOS ANGELES REGIONAL UNIFORM CODE PROGRAM

TYPE V CONSTRUCTION - WOOD FRAME RESIDENTIAL BUILDINGS (CBC CHAPTER 23, DIV IV, SEC. 2320) ONE-STORY CONSTRUCTION

TYPE V CONSTRUCTION IS A CLASSIFICATION OF BUILDINGS BY CONSTRUCTION MATERIALS AND METHODS. IT IS THE LEAST RESTRICTIVE PERMITTED BY THE CALIFORNIA BUILDING CODE AND INCLUDES LIGHT, WOOD-FRAME CONSTRUCTION. THIS SHEET IS FOR INFORMATION AND REFERENCE ONLY AND IS NOT A SUBSTITUTE FOR ACCURATE DRAWINGS PREPARED FOR EACH PROPOSED CONSTRUCTION PROJECT.

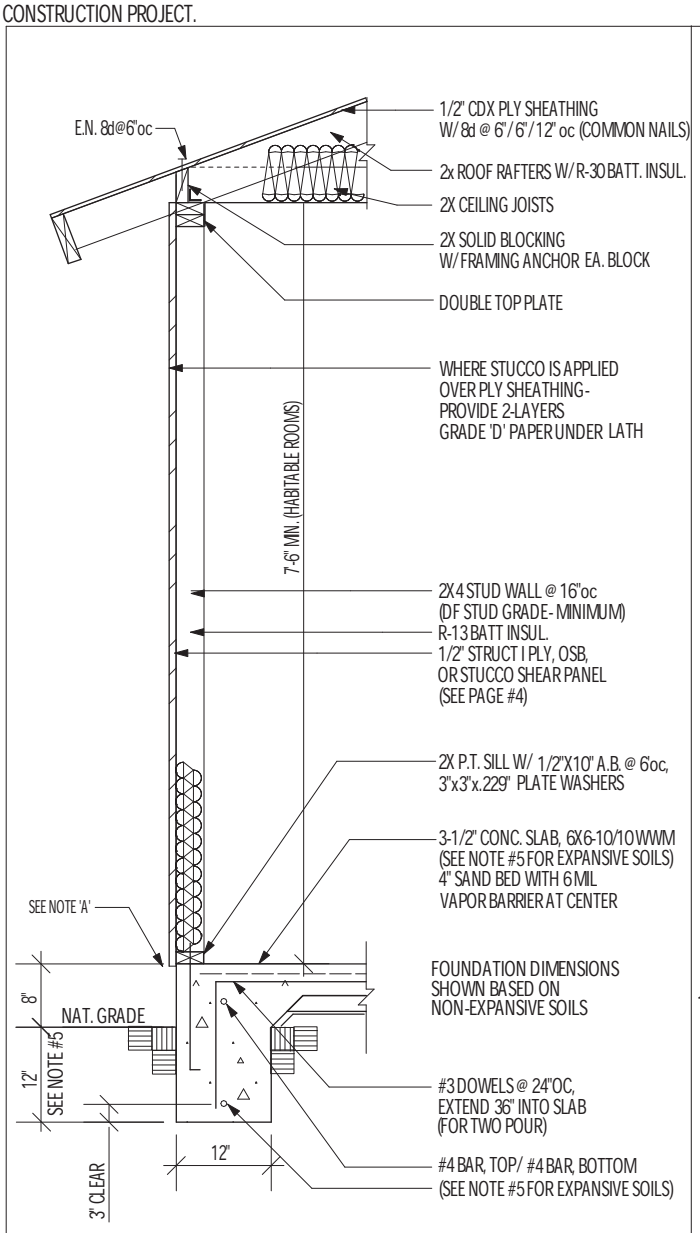

NOTES: 'A' - STUCCO SHALL BE PROVIDED WITH A CORROSION-RESISTANT WEEP SCREED, A MIN OF 4"/2" ABOVE GRADE/SLAB (CBC 2512.1.2)

WALL SECTION: SLAB-ON-GRADE CONSTRUCTION

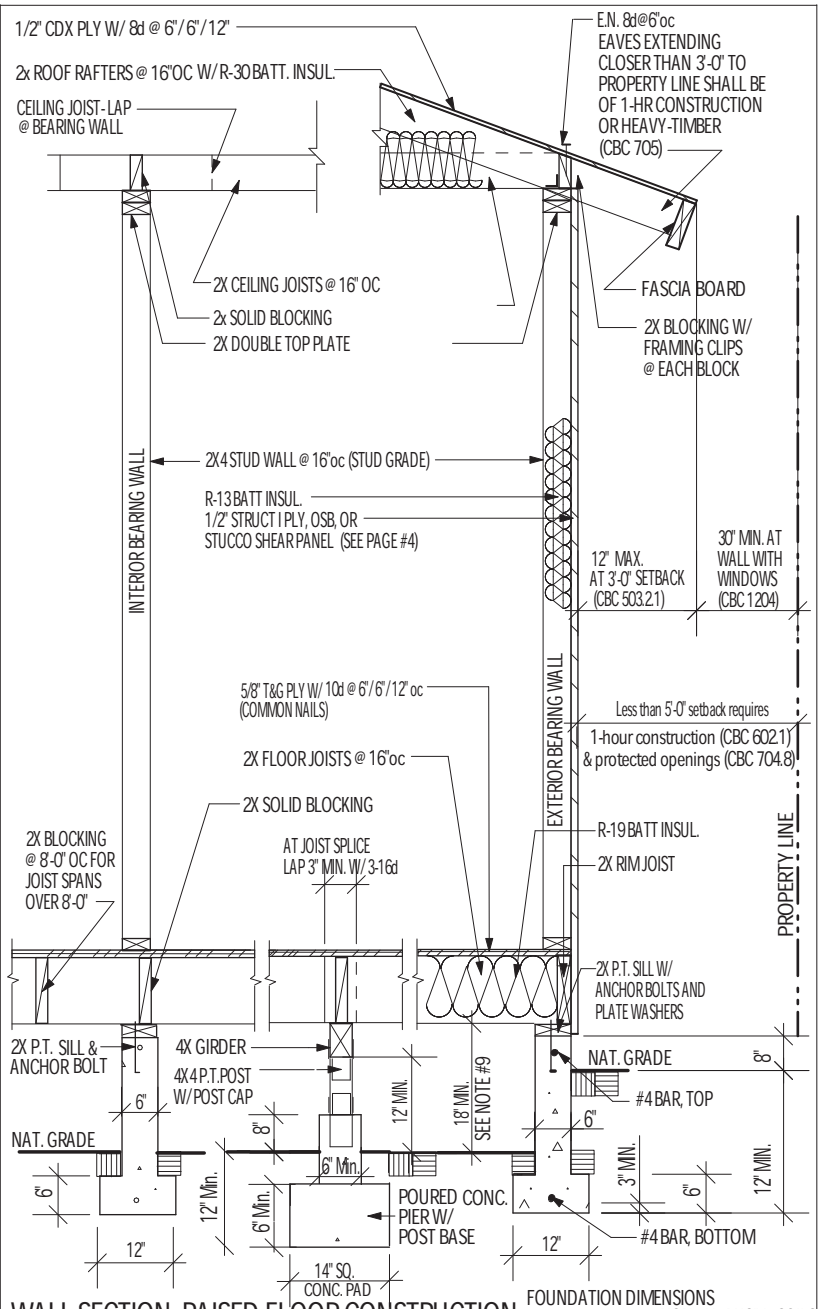

WALL SECTION: RAISED FLOOR CONSTRUCTION

FOUNDATION DIMENSIONS SHOWN BASED ON NON-EXPANSIVE SOILS

Notes:

1. Anchor bolts: 1/2"x10" embedded 7" and spaced 6'-0"oc with 3"x3"x.229" plate washers, with minimum 2 anchor bolts per piece, located not more than 12" or less than 7 bolt diameters from each end of the piece.
2. All foundation plates or sills and sleepers on a concrete or masonry slab, which is in direct contact with earth, and sills that rest on concrete or masonry foundations, shall be pressure treated wood.
3. Minimum Concrete Strength: 2500 psi.
4. Bearing walls and braced wall panels require continuous footings.
5. FOR EXPANSIVE SOIL: Refer to local jurisdiction requirements.
6. Where interior walls are shear wall panels, wall framing and sheathing shall extend to the roof sheathing.
7. Under floor areas shall be ventilated by approved mechanical means or by openings into the under-floor area walls. Such openings shall have a net area of not less than 1 square foot for each 150 square feet of under-floor area. Openings shall be located as close as possible to corners and provide cross ventilation. the openings shall be approximately equally distributed along the length of at least two sides. Corrosion resistant mesh w/ Minimum 1/4" openings.
8. Enclosed attics and enclosed rafter spaces shall have cross ventilation for each separate space. The net free ventilating area shall not be less than 1/150 of the area of the space ventilated. The openings may be 1/300 of the area provided 50% of the opening area is provided with ventilators in the upper portion at least 3' above the eave or cornice with the balance of the ventilators provided by eave or cornice vents. Provide baffles to prevent attic insulation from blocking eave vents. (CBC 1203.2)
9. For stem walls greater than 24" high: Refer to local jurisdiction requirements.

ALLOWABLE SPANS FOR DF #2 ROOF RAFTERS (DF-LARCH)

Light Dead Load (up to 15psf)/
Max. Roofing Load: 6psf (Asphalt Shingles)
Live Load: 20psf

RAFTER SIZE	SPACING	ALLOWABLE SPAN	
		ROOF LOAD ONLY	ROOF AND CEILING
2x6	24" 16" 12"	10'-0" 12'-3" 14'-1"	9'-4" 11'-5" 14'-1"
2x8	24" 16" 12"	13'-1" 16'-0" 18'-6"	12'-0" 15'-0" 17'-4"
2x10	24" 16" 12"	15'-10" 19'-5" 22'-5"	14'-10" 18'-2" 21'-0"
2x12	24" 16" 12"	18'-3" 22'-5" 25'-10"	17'-2" 21'-0" 24'-2"

ALLOWABLE SPANS FOR DF #2 CEILING JOISTS (DF-LARCH)

Dead Load: 5psf/Live Load: 10psf

JOIST SIZE	SPACING	ALLOWABLE SPAN
2x4	24" 16" 12"	9'-10" 11'-3" 12'-5"
2x6	24" 16" 12"	14'-9" 17'-8" 19'-6"
2x8	24" 16" 12"	19'-0" 23'-4" 25'-8"
2x10	12"	26'-0"

ALLOWABLE SPANS FOR DF #2 FLOOR JOISTS (DF-LARCH)

Light Dead Load (up to 10psf)
Max. Flooring Load: 1.5psf (Carpet or Vinyl)
Live Load: 40psf

JOIST SIZE	SPACING	ALLOWABLE SPAN
2x6	24"* 16" 12"	8'-2" 9'-9" 10'-9"
2x8	24"* 16" 12"	10'-2" 12'-7" 14'-2"
2x10	24"* 16" 12"	12'-8" 15'-0" 17'-4"
2x12	24"* 16" 12"	14'-4" 18'-0" 20'-6"

ALLOWABLE SPANS FOR DF #1 FLOOR GIRDERS (DF-LARCH)

Max. Floor Dead Load: 15psf Max. Tributary Width: 8'-0"

SPAN		GIRDER SIZE
PARTITIONS	NO PARTITIONS	
5'-3"	5'-8"	4x6
6'-10"	7'-4"	4x8

ALLOWABLE SPANS FOR DF#1 HEADERS (DF-LARCH)

Maximum span of tributary load: 20'-0"

SPAN	BEAM SIZE
Up to 4'-0"	4x4
4'-1" to 6'-0"	4x6
6'-1" to 8'-0"	4x8
8'-1" to 10'-0"	4x10
10'-1" to 12'-0"	4x12*

ALLOWABLE SPANS FOR PLYWOOD OR OSB FLOOR AND ROOF SHEATHING CONTINUOUS OVER TWO OR MORE SPANS-PERPENDICULAR TO SUPPORTS

NOTE: APPLIES TO PANELS 24" OR WIDER (UBC SEC. 2312)

SHEATHING GRADES		ROOF				FLOOR
SPAN RATING	SPAN THICKNESS	MAX. SPAN (IN)		LOADS (PSF)		MAX. SPAN (IN)
Floor/Roof Span		EDGE SUPPORT (2X BLOCKING)	NO EDGE SUPPORT FOR 1/2", MAX. SPAN +24"	TOTAL LOAD	LIVE LOAD	Panel edges with tongue and groove joints or with blocking
24/0	7/16, 1/2	24	20	40	30	
24/16	7/16, 1/2	24	24	50	40	16
32/16	15/32, 1/2, 5/8	32	28	40	30	16
40/20	19/32, 5/8, 3/4, 7/8	40	32	40	30	20
48/24	23/32, 3/4, 7/8	48	36	45	35	24

NAILING SCHEDULE (CBC TABLE 2304.9.1)

JOIST TO SILL OR GIRDER, TOE NAIL	3-8d
BRIDGING TO JOIST, TOENAIL EACH END	2-8d
SOLE PLATE TO JOIST OR BLOCKING, TYPICAL FACE NAIL	16d @ 16"oc
SOLE PLATE TO JOIST OR BLOCKING, AT BRACED WALL PANELS	3-16d per 16"
TOP PLATE TO STUD, END NAIL	2-16d
STUD TO SOLE PLATE	4-8d, TOENAIL, OR 2-16d, END NAIL
DOUBLE STUDS, FACE NAIL	16d @ 24" oc
DOUBLE TOP PLATES, TYPICAL FACE NAIL	16d @ 16" oc
DOUBLE TOP PLATES, LAP SPLICE	8-16d
BLOCKING BETWEEN JOISTS OT RAFTERS TO TOP PLATE, TOENAIL	3-8d
RIM JOIST TO TOP PLATE, TOENAIL	8d @ 6" oc
TOP PLATES, LAPS AND INTERSECTIONS, FACE NAIL	2-16d
CEILING JOISTS TO PLATE, TOENAIL	3-8d
CONTINUOUS HEADER TO STUD, TOENAIL	4-8d
CEILING JOISTS, LAPS OVER PARTITIONS, FACE NAIL	3-16d
CEILING JOISTS TO PARALLEL RAFTERS,FACE NAIL	3-16d
RAFTER TO PLATE, FACE NAIL	3-8d
BUILT-UP CORNER STUDS	16d @ 24" oc
2" PLANKS	2-16d @ EACH BEARING

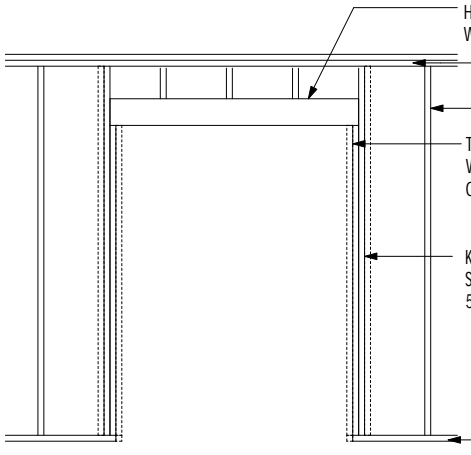

HEADER/LINTEL (CBC 2308.9.5)

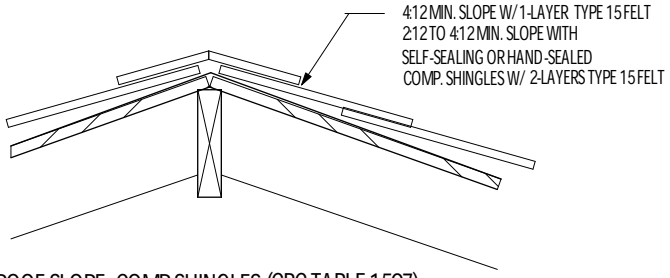

ROOF SLOPE- COMP SHINGLES (CBC TABLE 1507)

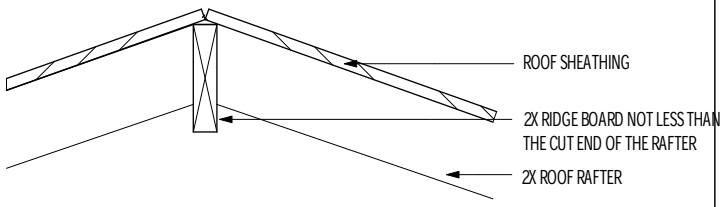

RIDGE (CBC 2308.10.4)

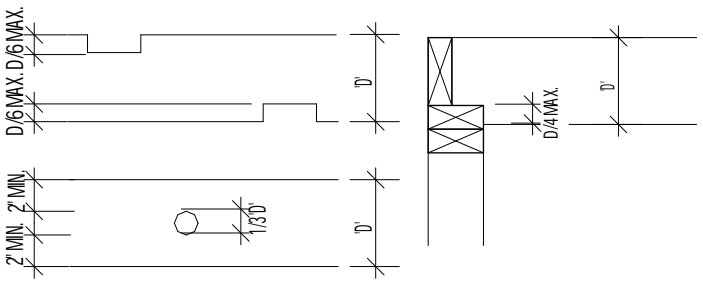

NOTCHING & BORING FLOOR JOISTS
(NOTCHING NOT PERMITTED IN MIDDLE 1/3 OF JOIST SPAN)

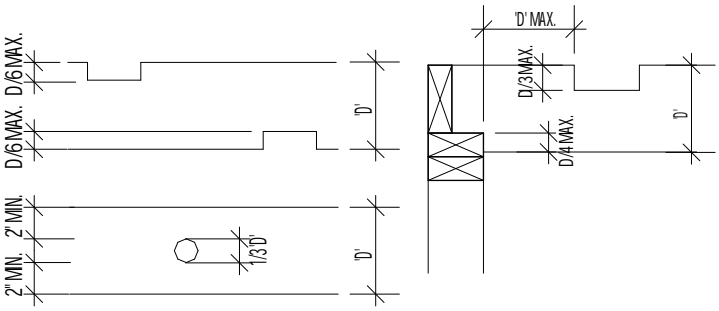

NOTCHING & BORING RAFTERS & CEILING JOISTS
(NOTCHING NOT PERMITTED IN MIDDLE 1/3 OF RAFTER OR JOIST SPAN)

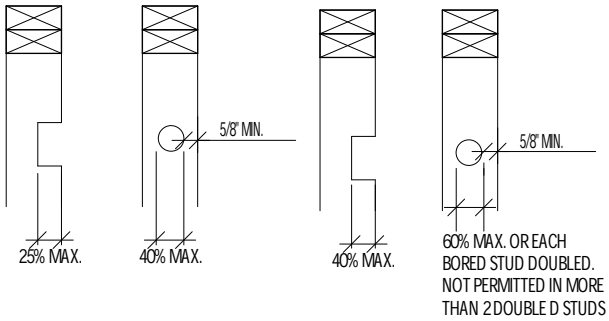

BEARING PARTITIONS

NON-BEARING PARTITIONS

NOTCHING & BORING:
WALL STUDS (CBC 2308.9.10/ 2308.9.11),
RAFTERS/CEILING JOISTS (CBC 2308.10.4.2)
FLOOR JOISTS (CBC 2308.8.2)

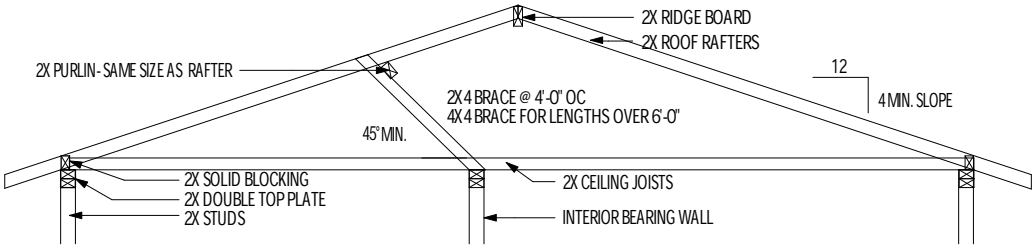

PURLINS (CBC 2308.10.5)

(FOR ROOF PITCH NOT LESS THAN 4 VERTICAL TO 12 HORIZONTAL)

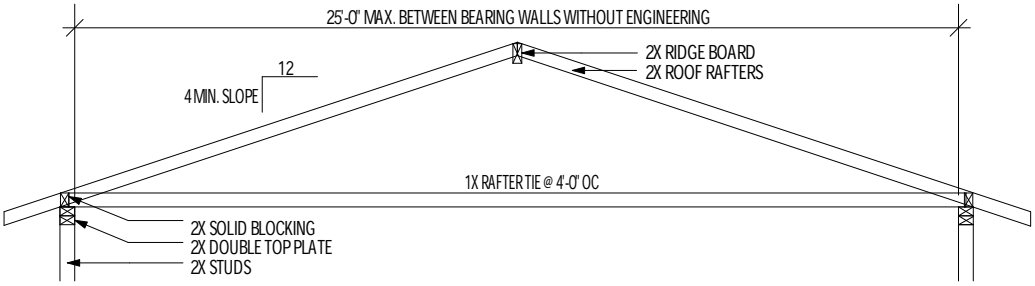

RAFTER TIES (CBC 2308.10.4.1)

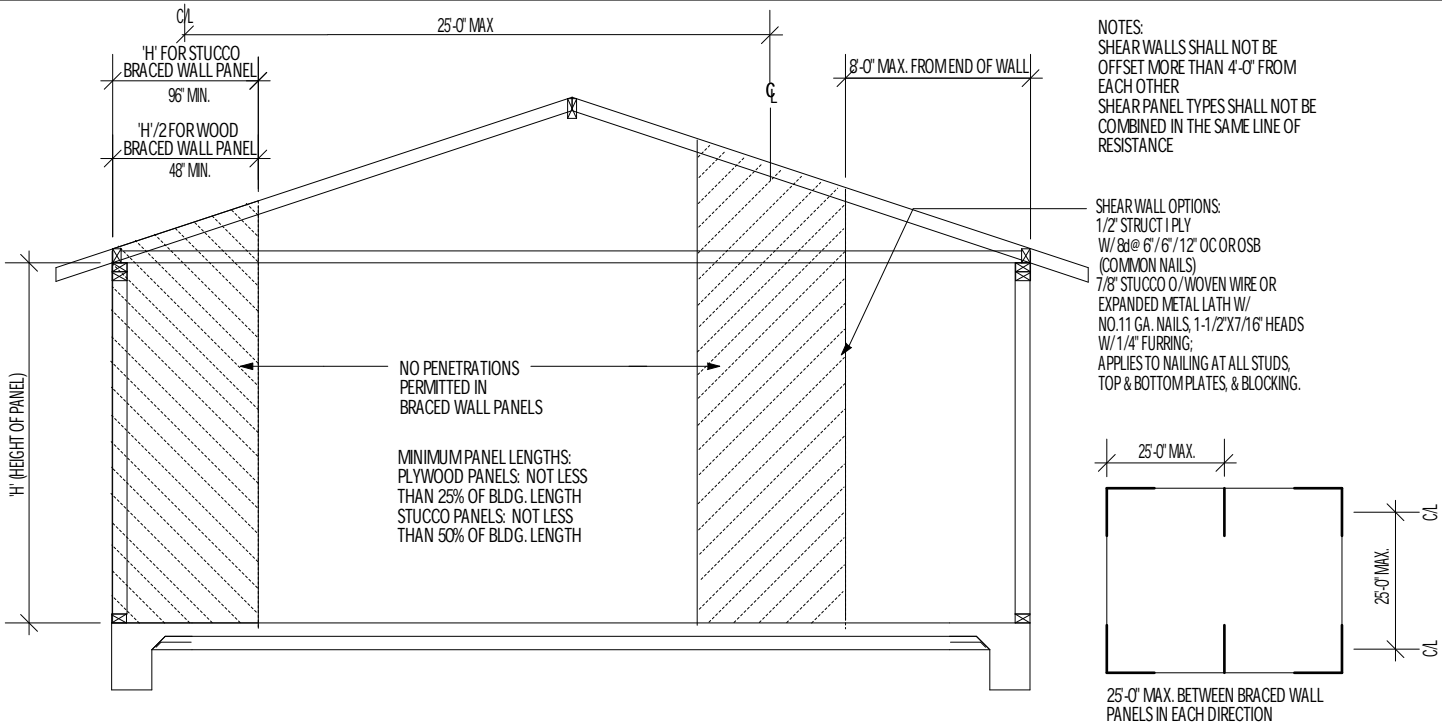

STANDARD BRACED WALL PANELS (CBC 2308.12.4)

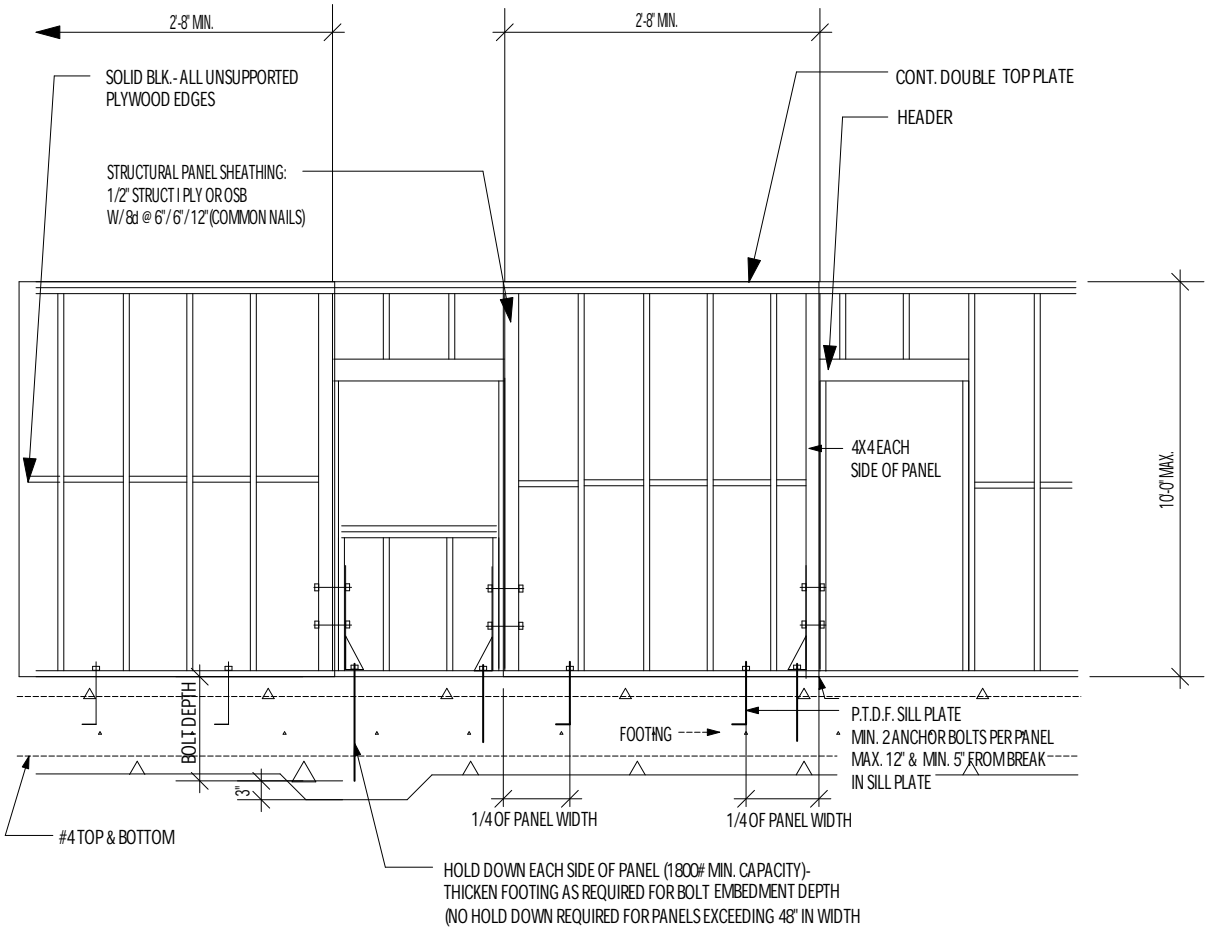

ALTERNATE BRACED WALL PANEL (CBC 2308.12.4)

1-STORY, 'U' OCCUPANCY ONLY (PRIVATE GARAGES, SHEDS, & AGRICULTURAL BUILDINGS)

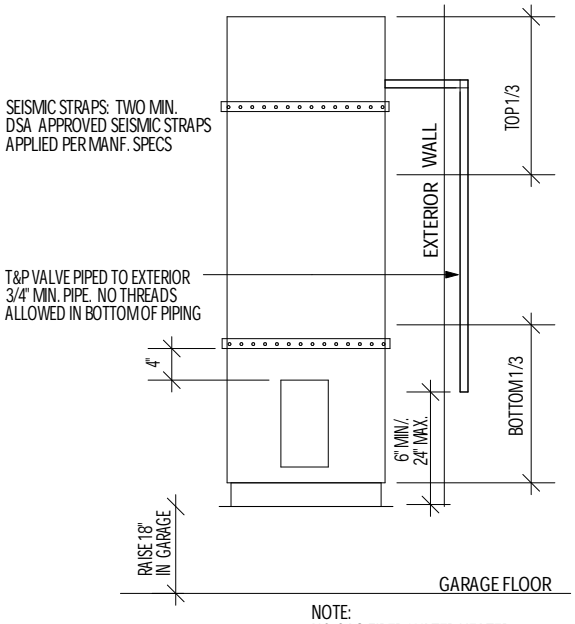

NOTE:
NO GAS-FIRED WATER HEATER
ALLOWED IN BEDROOMS,
BATHROOMS, CLOTHES CLOSETS,
OR ANY SPACE OPENING INTO
A BEDROOM OR BATHROOM.

WATER HEATERS

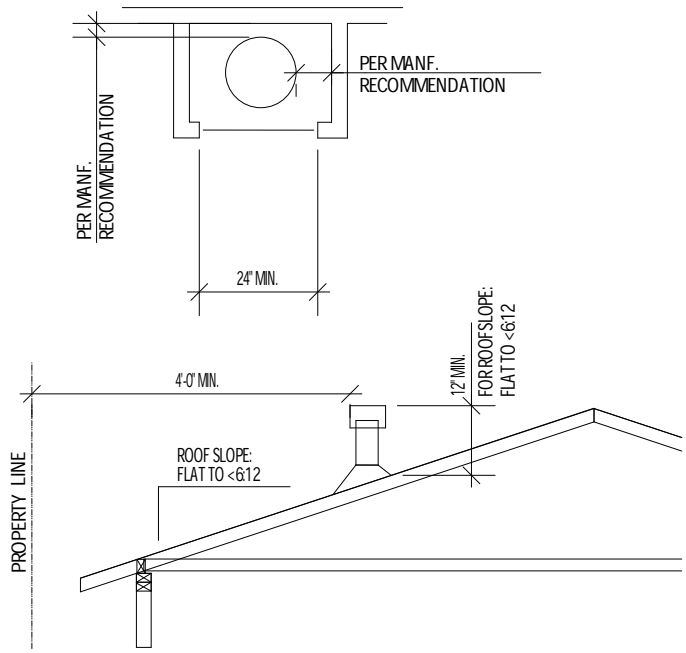

VENT

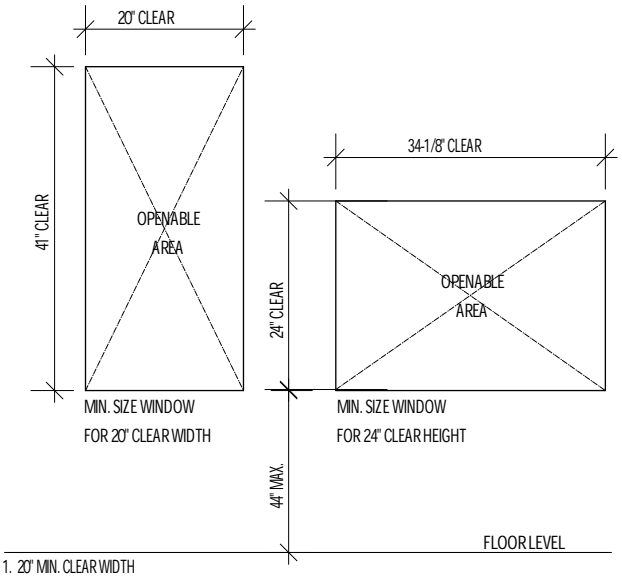

1. 20" MIN. CLEAR WIDTH
2. 24" MIN. CLEAR HEIGHT
3. 5.7 SF MIN. OPENABLE AREA

EMERGENCY ESCAPE/EXIT WINDOW (CBC 1026.2)

THE FOLLOWING WINDOW SIZES WILL BE THE MINIMUM ALLOWED FOR EGRESS UNLESS MANF. DATA IS SUPPLIED

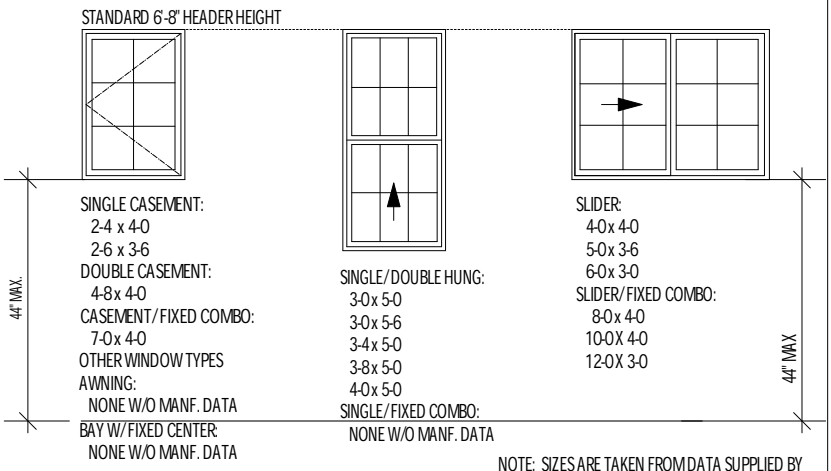

NOTE: SIZES ARE TAKEN FROM DATA SUPPLIED BY WINDOW MANUFACTURERS, HOWEVER THESE ARE GENERAL DIMENSIONS. IT IS THE OWNERS RESPONSIBILITY TO VERIFY THAT THE ACTUAL WINDOWS INSTALLED MEET THE MINIMUM EGRESS REQUIREMENTS.

EMERGENCY ESCAPE/EXIT WINDOW
(CBC 1026.2)

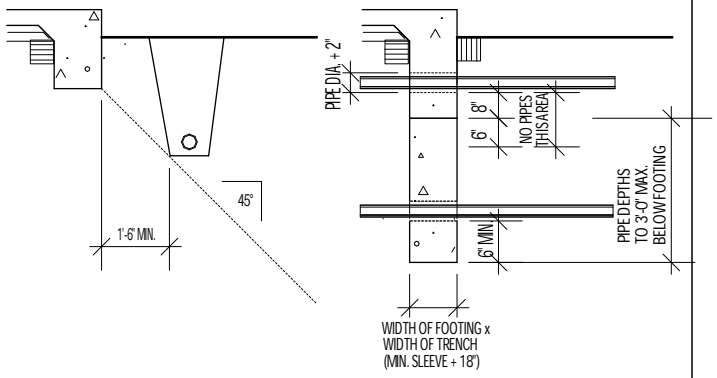

TRENCHES AT FOOTINGS

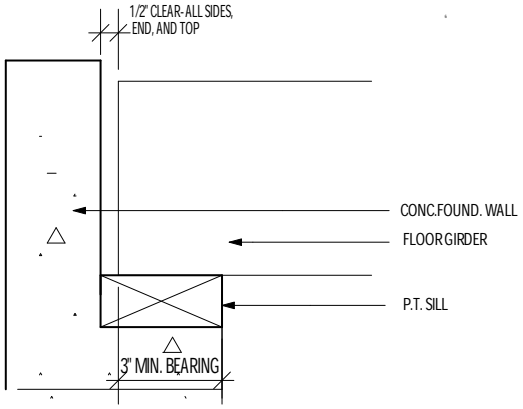

GIRDER (CBC 2304.11.2.5/2308.7)

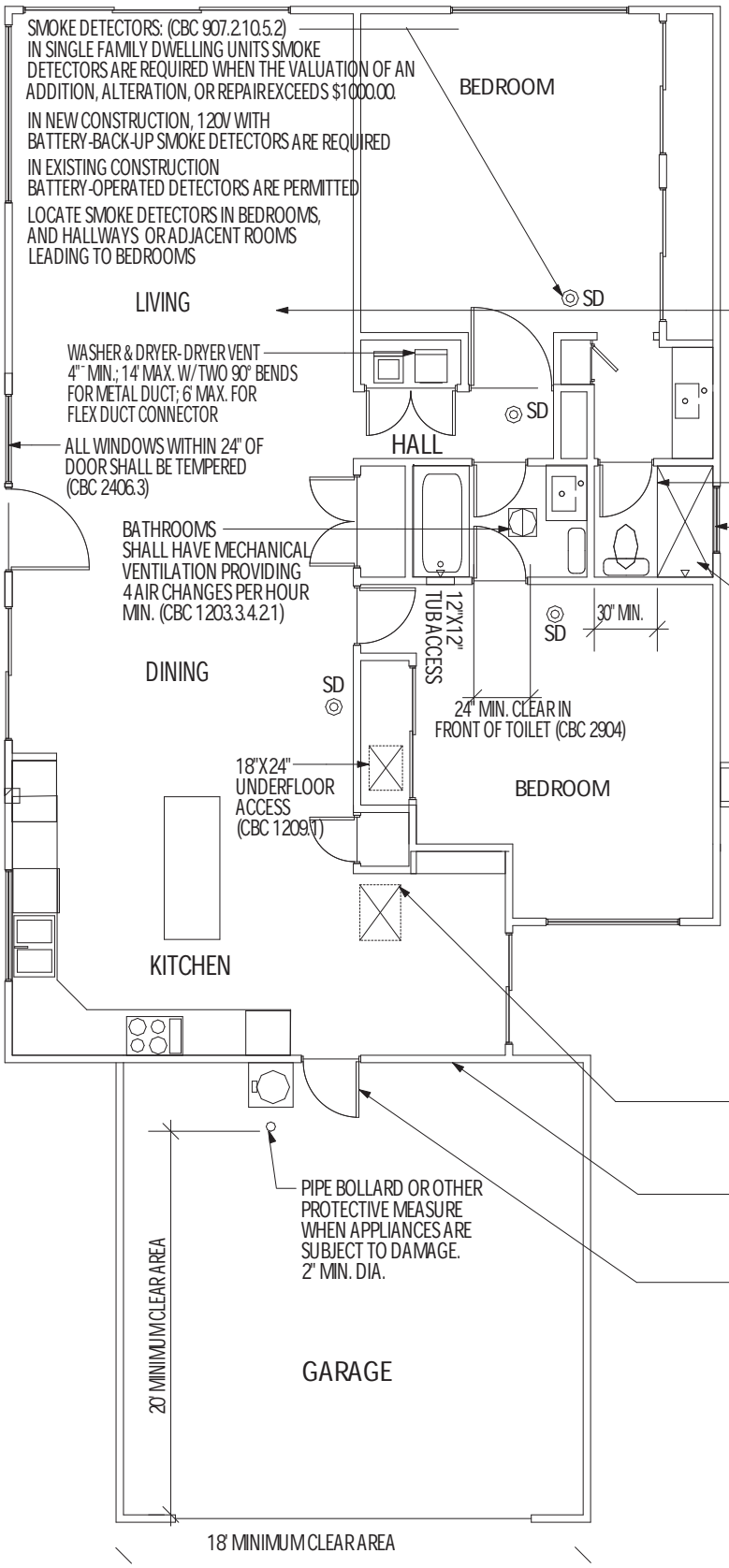

LIGHT : (CBC 1205.1)
ALL HABITABLE ROOMS REQUIRE NATURAL LIGHT BY MEANS OF EXTERIOR WINDOWS OR SKYLIGHTS @ 8% OF THE ROOM FLOOR AREA OR ARTIFICIAL LIGHT OF 10 FOOT CANDLES @ 30" ABOVE FLOOR.

50% OF KITCHEN LIGHTING WATTAGE MUST BE HIGH EFFICACY

LIGHTING IN BATHROOM, GARAGE, LAUNDRY AND UTILITY ROOMS MUST BE HIGH EFFICACY OR CONTROLLED BY AN OCCUPANCY SENSOR.

ALL OTHER HABITAL ROOMS MUST BE HIGH EFFICACY, CONTROLLED BY AN OCCUPANCY SENSOR OR DIMMER.

ALL OUTDOOR LIGHTING ATTACHED TO BUILDINGS MUST BE HIGH EFFICACY OR CONTROLLED BY A MOTION SENSOR WITH PHOTO CONTROL.

MINIMUM ROOM DIMENSIONS: (CBC 1208)
AT LEAST ONE ROOM 120 SF
ALL OTHER ROOMS EXCEPT KITCHEN 70 SF WITH A MIN. DIMENSION OF 7'-0"

SHOWER & TUB ENCLOSURES SHALL BE TEMPERED (CBC 2406.3)
WINDOWS AT SHOWERS & TUBS SHALL BE TEMPERED, IF LESS THAN 60" ABOVE A STANDING SURFACE AND DRAIN INLET (CBC 2406.3)

70" HIGH NON-ABSORBENT FINISH @ SHOWER WALL (CBC 1210.3)

ALTERNATE 18"X24" UNDERFLOOR ACCESS FROM EXTERIOR

VENTILATION: (CBC 1203.4.1)
ALL HABITABLE ROOMS REQUIRE NATURAL VENTILATION BY MEANS OF OPENABLE WINDOWS @ 4% OF THE ROOM FLOOR AREA. (NATURAL VENTILATION MAY BE SUBSTITUTED WITH MECHANICAL VENTILATION).

22"X30" ATTIC ACCESS, OR 30"X30" IF FURNACE IS IN ATTIC AND EQUIPMENT WILL NOT PASS THROUGH 22"X30" ACCESS. MIN. HEADROOM IS 30". (CBC 1209.2 & CMC 904.11)

WHERE GARAGES ARE ATTACHED TO THE RESIDENCE, THE WALL ON THE GARGE SIDE SHALL BE PROTECTED WITH 1/2" TYPE 'X' GYP. BD TO ROOF SHEATHING. (CBC 406.1.4)

THE DOOR SHALL BE A SELF-CLOSING, TIGHT-FITTING 1-3/8" SOLID CORE DOOR. (CBC 406.1.4
NOTE: THE GARAGE SHALL NOT OPEN INTO A SLEEPING ROOM.

RESIDENTIAL REQUIREMENTS