OPEN PATIO

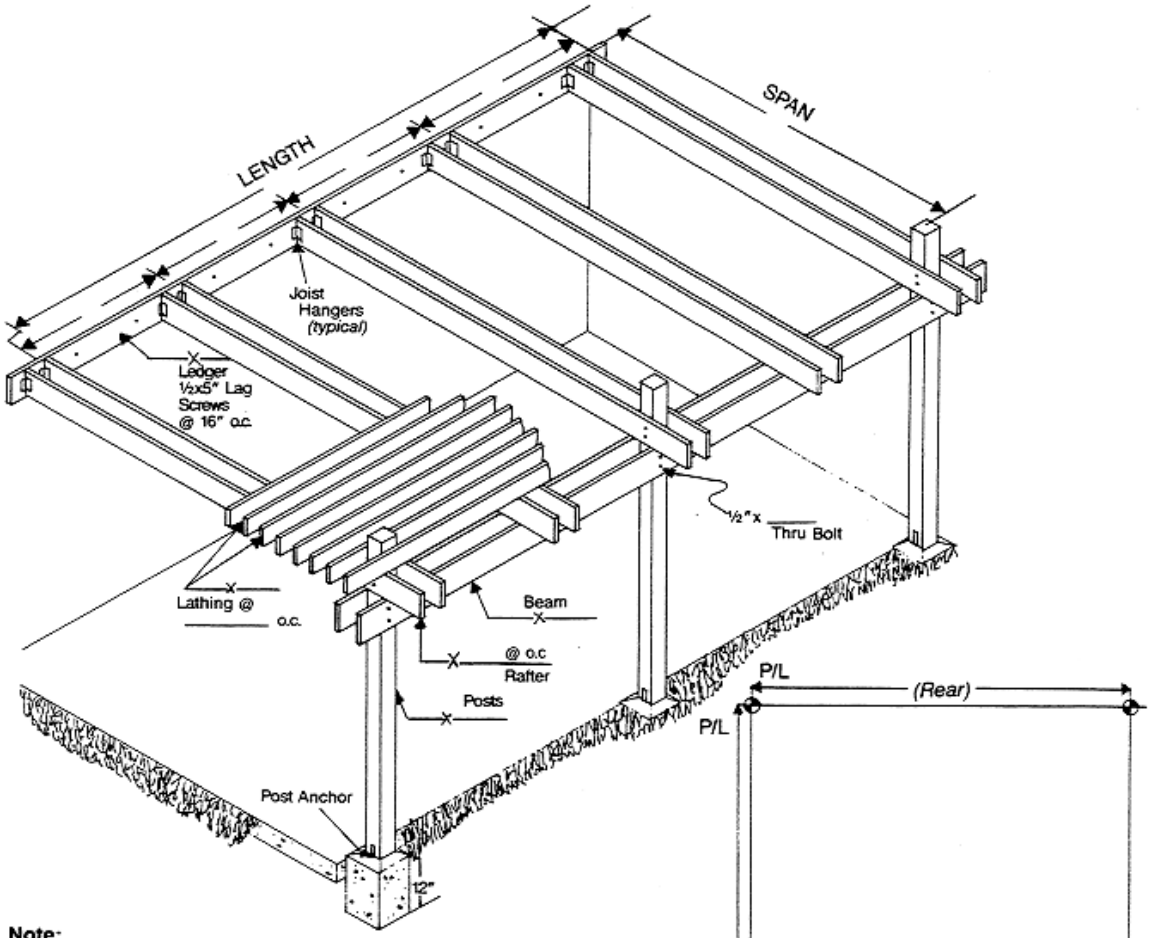

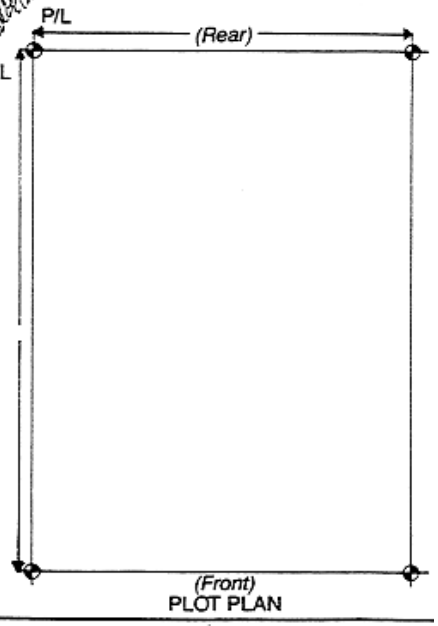

Note:
See STD. B-1 for Material Specifications

INSERT SIZES / DIMENSIONS APPLICABLE

RAFTER			BEAM & FOOTING					
SIZE	SPACE	SPAN	PROJ	4x4	4x6	4x8	4x10	SQ. FTG.
2x4	12"	10'6"	8'	7'0"	11'0	14'6"	18'6"	12"
	16"	9'0"	10'	6'4"	10'0	13'2"	16'9"	14"
	24"	7'4"						
2x6	12"	16'6"			9'2"	12'0"	15'5"	
	16"	14'3"	12'		8'6"	11'3"	14'4"	
	24"	11'8"	14'		8'0"	10'6"	13'6"	16"
2x8	12"	21'8"	16'		7'6"	10'0"	12'9"	
	16"	18'9"	18'			9'6"	12'4"	18"
	24"	15'4"	20'					

CITY OF TORRANCE
BUILDING AND SAFETY DEPARTMENT

1/92

B-3

open in browser PRO version Are you a developer? Try out the HTML to PDF API pdfcrowd.com