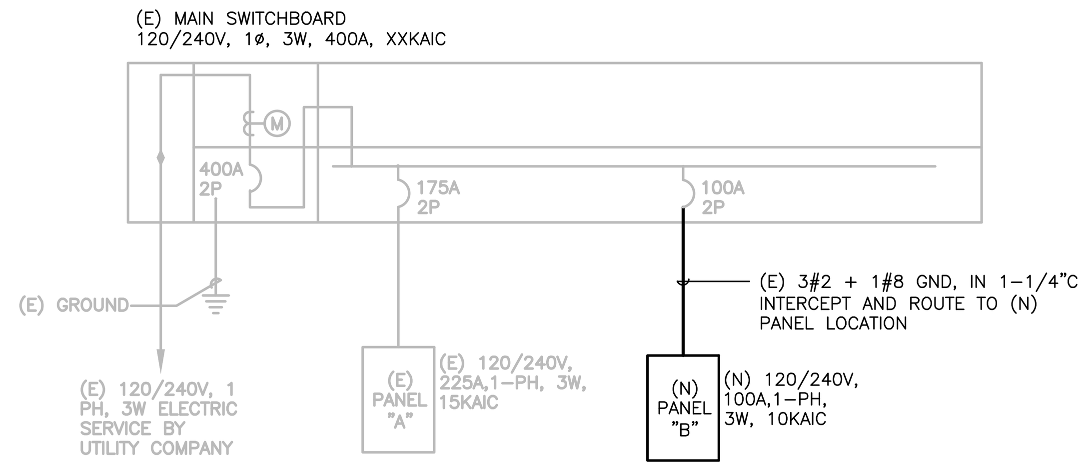

MAIN SERVICE LOAD CALCULATION		
(N) CONNECTED LOAD	19.32	KVA
25% LOAD GROWTH CAPACITY	4.83	KVA
TOTAL CONNECTED LOAD (KVA)	24.15	KVA
(AMP)	100.63	A

COMMUNITY CENTER SINGLE LINE DIAGRAM 1 / -

SCALE: NONE

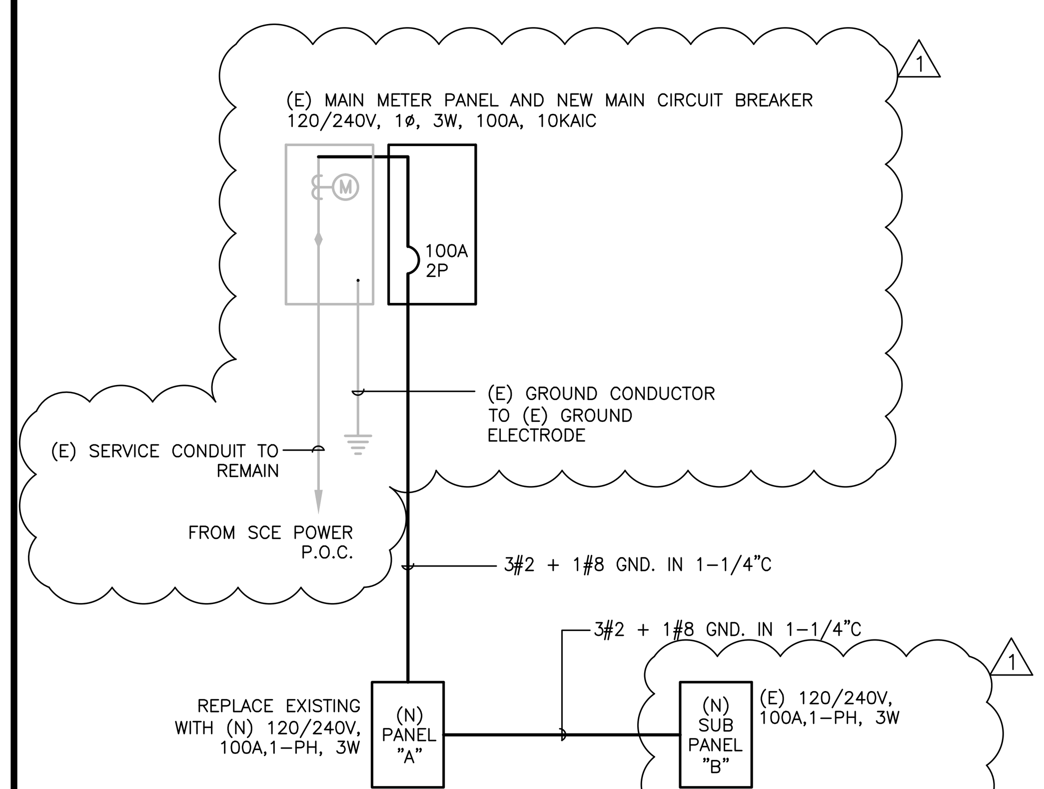

MAIN SERVICE LOAD CALCULATION		
(N) CONNECTED LOAD	18.73	KVA
25% LOAD GROWTH CAPACITY	4.7	KVA
TOTAL CONNECTED LOAD (KVA)	23.43	KVA
(AMP)	97.63	A

RECREATION CENTER SINGLE LINE DIAGRAM 2 / -

SCALE: NONE

ELECTRICAL LEGEND

LIGHTING

SYMBOL	DESCRIPTION
	RECESSED FLUOR. LUMINAIRE (SIZE/SHAPE VARIES)
	SURFACE FLUOR. LUMINAIRE (SIZE/SHAPE VARIES)
	SHADING OF ANY LUMINAIRE INDICATES CONNECTION TO ALTERNATE POWER SOURCE (EMERGENCY, UPS, STANDBY, ETC.) PER CIRCUITING INDICATED
	POINT SOURCE – SURFACE, RECESSED CEILING MTD.
	FLOOR OR GRADE MOUNTED BOLLARD
	TRACK LIGHTING WITH HEADS AS INDICATED.
	ADJUSTABLE POINT SOURCE – SURFACE CEILING, RECESSED CEILING MOUNTED.
	BATTERY POWER EMERGENCY UNIT EQUIPMENT (SEE LUMINARE SCHEDULE FOR QUANTITY OF HEADS) – WALL, CEILING MOUNTED.
	ILLUMINATED EXIT SIGN, SHADED QUADRANT INDICATES FACES, ARROWS AS SHOWN
	"FOOT" INDICATES WALL MOUNTED LUMINAIRE
	FLUORESCENT STRIPLIGHT – POWER FEED SECTION, FEED THROUGH SECTION. LENGTH AS SHOWN.
	UNDERCABINET FLUORESCENT STRIPLIGHT
	FLUSH GRADE POINT SOURCE – SHIELDED, UPLIGHT
PTA 3c / PTA 3A	LUMINAIRE MARKING CONVENTION LEGEND: PTA = LUMINAIRE TYPE IDENTIFICATION. SEE LUMINAIRE SCHEDULE. 3c = CIRCUIT NUMBER VIA LOCAL SWITCH (LOWERCASE LETTER) THAT SERVES THE LUMINIARE. 3A = CIRCUIT NUMBER/UPPERCASE LETTER COMBINATION INDICATES LOW VOLTAGE RELAY OR LIGHTING CONTACTOR THAT SERVES THE LUMINAIRE

SWITCHING CONTROLS

SYMBOL	DESCRIPTION
S^a	SINGLE POLE SWITCH (SUPERSCRIPT DENOTES SIMILARLY MARKED LUMINAIRES CONTROLLED TOGETHER)
S_2	TWO POLE SWITCH
S_3	THREE WAY SWITCH
S_4	FOUR WAY SWITCH
S_K	KEY OPERATED SWITCH
D	DIMMER SWITCH. NUMBER INDICATES WATTAGE RATING. IF NOT SHOWN THEN EQUAL TO LOAD.
S_P	SWITCH WITH PILOT LIGHT (PILOT IS "ON WHEN SWITCH IS "ON").
S_{PL}	SWITCH WITH PILOT LIGHT (PILOT IS "ON WHEN SWITCH IS "OFF").
S_{TS}	TIMER SWITCH
S^{5A}, $S^{5A,5B}$ S^{5C}	LOW VOLTAGE MOMENTARY CONTACT SWITCH, UPPER CASE LETTER SUPERSCRIPT INDICATES CONNECTION TO LOW VOLTAGE RELAY CONTROLLING SIMILARLY MARKED LUMINAIRES.
S_{WP}	WEATHERPROOF SWITCH
S_T	THERMAL OVERLOAD SWITCH
R	RELAY
TC	TIME CLOCK
	OCCUPANCY SENSOR SWITCH – WALL MOUNTED (PIR)
	360 DEGREE OCCUPANCY SENSOR AND POWER PACK – CEILING MTD. (MULTIPLE POWER PACKS AS INDICATED) SUB-LETTER "r" INDICATES REMOTE SENSOR ONLY. (TYPICAL)
	180 DEGREE OCCUPANCY SENSOR – CEILING MTD.
	CORRIDOR/AISLE OCCUPANCY SENSOR – CEILING MOUNTED
	THERMOSTAT – WALL, CEILING. PROVIDED BY DIV. 15, INSTALLED AND WIRED BY DIV. 16
EPO	EMERGENCY POWER OFF, HEAVY-DUTY, OIL-TIGHT RED MUSHROOM-HEAD PUSHBUTTON W/ GUARD.
LCP ?	LIGHTING CONTROL PANEL AND ASSOCIATED COMPONENTS. PROVIDE 120V OR 277V CONTROL POWER AS REQUIRED OR AS INDICATED.
TX	REMOTE MOUNTED LINE TO LOW-VOLTAGE FUSED TRANSFORMER. CONCEAL FROM VIEW.

DIAGRAMS

SYMBOL	DESCRIPTION
	HAND/OFF/AUTO SWITCH
	DELTA CONNECTION
	GROUNDED WYE CONNECTION
	CONNECTION TO GROUND
100AT 225AF	CIRCUIT BREAKER, WITH TRIP & FRAME AMPERE RATING
225AF 400AS	FUSED SWITCH, WITH FUSE AND SWITCH AMPERE RATING
ST	SHUNT TRIP UNIT, 120VAC OR VOLTAGE AS NOTED

NOTE:

SCREENED OBJECTS ARE EXISTING AND DARK HEAVY OBJECTS ARE NEW TO BE FURNISHED AND INSTALLED BY THE CONTRACTOR REGARDLESS IF THE ITEMS ARE DESIGNATED WITH (N).

DISTRIBUTION & EQUIPMENT

SYMBOL	DESCRIPTION
	BRANCH CIRCUIT PANELBOARDS, SURFACE AND RECESS MOUNTED, SOLID= 120/280V, HATCHED= 277/480V, DASHED EQUIP. = FUTURE
	MOTOR CONTROL CENTER W/ CODE CLEARANCES SHOWN, DASHED EQUIP. = FUTURE
	TRANSFORMER WITH CODE CLEARANCES SHOWN
	SWITCH BOARD / SWITCH GUARD WITH CODE CLEARANCES SHOWN
	CONNECTION TO MOTOR PROVIDED BY OTHERS
30A	DISCONNECT SWITCH, SIZE AS NOTED OR IF NOT SHOWN SIZE PER CONNECTED MOTOR SIZE AND MOTOR DISCONNECT SCHEDULE
F 30A	FUSED DISCONNECT SWITCH, SIZE AS NOTED. SIZE FUSE PER MANUFACTURER'S RECOMMENDATIONS
C 60AT	ENCLOSED CIRCUIT BREAKER DISCONNECT SWITCH, TRIP SIZE AS NOTED.
	DISCONNECT W/ MAGNETIC MOTOR STARTER (CONTROLLER) OR CONTACTOR. SIZE PER LOAD SERVED. NEMA SIZE #1 MINIMUM UON.
	MAGNETIC MOTOR STARTER (CONTROLLER) OR CONTACTOR. SIZE PER LOAD SERVED. NEMA SIZE #1 MINIMUM UON.
	DIV. 16 CONNECTION TO EQUIPMENT PROVIDED BY OTHERS. SHADED = ON ALT. POWER SOURCE NOTED
	DIV. 16 CONNECTION TO EQUIPMENT WITH INTEGRAL DISCONNECT THAT IS PROVIDED BY OTHERS. SHADED = ON ALT. POWER SOURCE NOTED
	EQUIPMENT OR TERMINAL ENCLOSURE AS NOTED, SURFACE AND RECESS MOUNTED
	BUILDING GROUND BUS, SEE DETAILS
	BUSWAY RISER
C 60AT / F 30A	BUSWAY STAB-IN TYPE CIRCUIT BREAKER OR FUSE DISCONNECT. SIZE AS NOTED.

SIGNAL DEVICES

SYMBOL	DESCRIPTION
	TERMINAL/MOUNTING BOARD, 8' HIGH X WIDTH AS SHOWN, FIRE TREATED.
	SIGNAL SYSTEM EQUIPMENT ENCLOSURES AS NOTED-SURFACE, RECESSED MOUNTED
	COMBO TELEPHONE/DATA OUTLET – WALL
W	TELEPHONE OUTLET – WALL, W = USE HIGHER MOUNTING HEIGHT PER MOUNTING HT. DETAIL
	DATA OUTLET – WALL
S	SPEAKER – WALL, CEILING
V	VOLUME CONTROL – WALL
B	BELL
	BUZZER
	CHIME
	RF COAX CABLE OUTLET (TV, VCR, ETC.)
I, M	INTERCOM STATION – WALL, DESK M = MASTER STATION
M	MICROPHONE JACK – WALL, FLOOR
	FLUSH FLOOR DEVICE – DEVICE TYPE PER SYMBOLS ABOVE

WIRING

SYMBOL	DESCRIPTION
	WIRING CONCEALED IN CEILING OR WALL. LINE WEIGHT TOP TO BOTTOM= NEW, EXISTING TO REMAIN, FUTURE
	WIRING CONCEALED IN FLOOR OR UNDER GRADE OR ROUTED IN CEILING SPACE OF FLOOR BELOW. LINE WEIGHT TOP TO BOTTOM= NEW, EXISTING TO REMAIN, FUTURE
	WIRING EXPOSED. LINE WEIGHT TOP TO BOTTOM= NEW, EXISTING TO REMAIN, FUTURE
-X-X-X-X-	EXISTING WIRING TO BE REMOVED
—T—	TELEPHONE/DATA SYSTEM CONDUIT 3/4"C U.O.N.
—G—G—	GROUNDING GRID OR CONDUCTORS
	STROKES INDICATE QUANTITY OF #12 AWG. CONDUCTORS, UON. NOTE: REFER TO BRANCH CIRCUIT WIRING LEGEND.
	ISOLATED GROUND
	HOT AND NEUTRAL
L1A-1,3	HOME RUN WIRING TO INDICATED DESTINATION.
	CONDUIT RUN TURNED UP THROUGH FLOOR OR CEILING. CORE & FIREPROOF AS REQUIRED.
	CONDUIT RUN TURNED DOWN THROUGH FLOOR OR CEILING. CORE & FIREPROOF AS REQUIRED.
	CONDUIT STUBBED OUT AT LOCATION SHOWN. PROVIDE INSULATED BUSHING & PULLROPE.
	TELEPHONE/DATA SLEEVE THROUGH WALL, ABOVE CEILING. EXTEND TO ACCESSIBLE TILE CLG. BOTH SIDES. TERMINATE WITH BUSHINGS. (1) 1.25" CO UON. COORDINATE LOCATIONS WITH CABLE INSTALLER(S) PRIOR TO ROUGH-IN.
—IC—	INTERCOM SYSTEM
—PA—	PA SYSTEM
—TV—	MASTER/ANTENNA/CABLE TV CONDUIT
—LV—	LOW VOLTAGE WIRE
—S—	SECURITY SYSTEM CONDUIT. 1/2"C U.O.N.
J	JUNCTION BOXES, WALL, CEILING AND FLUSH FLOOR MOUNTED. 4" SQ. BOX MIN., LARGER IF REQUIRED
PB	PULL BOX, MIN. SIZE PER NEC., UON.
	FLEXIBLE CONDUIT CONNECTION

SECURITY SYSTEM

SYMBOL	DESCRIPTION
CR	CARD READER- WALL MOUNTED/MULLION MOUNTED
EB	ELECTRIC BOLT
EL	ELECTRIC LOCK/LATCH
ES	ELECTRIC STRIKE

POWER DEVICES

SYMBOL	DESCRIPTION
	SIMPLEX RECEPTACLE – WALL, CEILING, ON ALT.
	DUPLEX RECEPTACLE – WALL, CEILING, ON ALT.
	DOUBLE DUPLEX RECEPTACLE – WALL, CLG, ON ALT.
L5-15R	SPECIAL PURPOSE RECEPTACLE –WALL, CEILING ON ALT. POWER; NEMA CONFIGURATION AS NOTED
AB	RECEPTACLE TYPE SHOWN –WALL –ABOVE COUNTER BACKSPLASH. SEE ARCHITECTURAL DRAWINGS.
"ON ALT."	SHADED RECEPTACLES NOTED "ON ALT." ABOVE ARE CONNECTED TO ALTERNATE POWER SOURCE (EMERG., STANDBY, UPS, ETC.) PER CIRCUITING INDICATED
GFI	DUPLEX RECEPTACLE – WALL – WITH INTEGRAL GROUND FAULT CIRCUIT INTERRUPTER
WP	RECEPT. TYPE SHOWN W/ WEATHERPROOF COVER AND INTEGRAL GROUND FAULT CIRCUIT INTERRUPTER
+42"	RECEPT. TYPE SHOWN AT SPECIAL HEIGHT
IG	RECEPTACLE W/ ISOLATED GROUND AND TRANSIENT SURGE SUPPRESSED.
	WALL MOUNTED ELECTRICAL CONNECTION TO ELECTRIFIED FURNITURE.
	CLOCK HANGER RECEPTACLE
	FLUSH FLOOR BOX DEVICE – DEVICE TYPE PER SYMBOLS ABOVE
	POKE THRU UNIT WITH DUPLEX RECEPTACLE – FLUSH, PEDESTAL MOUNTED.
	POKE THRU UNIT WITH DOUBLE DUPLEX RECEPTACLE – FLUSH, PEDESTAL MOUNTED.
	COMBO POKE THRU UNIT WITH DUPLEX RECEPTACLE AND TELEPHONE OUTLET – FLUSH, PEDESTAL MOUNTED.
	MULTI-SERVICE FLOOR BOX CAST IN CONC. OR IN RAISED FLOOR – SEE ARCH DWGS; WITH RECEPTACLES & SIGNAL OUTLETS AS NOTED.
J	POKE THRU UNIT WITH JUNCTION BOX. RACEWAY COMPONENTS RC-700 SERIES.
	TELE/POWER POLE, POWER POLE
	TELE/POWER POLE WITH WHIP CONNECTION TO ELECTRIFIED FURNITURE
(18")	TWO-PIECE SURFACE METAL RACEWAY WITH RECEPTACLES, SPACING OF RECEPTACLES INDICATED. (18")
(24")	TWO OR THREE COMPARTMENT SURFACE METAL RACEWAY WITH RECEPTACLES AND OUTLETS AS INDICATED. (24")

REFERENCE SYMBOLS

SYMBOL	DESCRIPTION
12	SHEET NOTE REFERENCE
125.4	BRANCH CIRCUIT OR FEEDER NOMINAL AMPACITY & TYPE; REFER TO BRANCH CIRCUIT AND FEEDER SCHEDULES FOR WIRE AND CONDUIT SIZES & QTY.
1 / T4.1	REFER TO DETAIL NO. ON DRAWING INDICATED NOT ALL DETAIL REFERENCES ARE SHOWN. ALL DETAILS APPLY TO ALL APPLICABLE SITUATIONS, UON.
K123	KITCHEN EQUIPMENT REFERENCE, REFER TO KITCHEN EQUIPMENT SCHEDULE
CH 1	MECHANICAL EQUIPMENT IDENTIFICATION TAG
EQUIP NAME	EQUIPMENT BY OTHERS IDENTIFICATION TAG

BRANCH CIRCUIT WIRING LEGEND

12-2	NM-B	6-2	NM-B *
12-3	NM-B	6-3	NM-B *
12-4	NM-B	6-4	NM-B *
10-2	NM-B		
10-3	NM-B		
10-4	NM-B		
8-2	NM-B *		
8-3	NM-B *		
8-4	NM-B *		

* FOR CONDUCTORS GREATER THAN AWG #10 STRANDED CONDUCTORS ARE TO BE USED.

NOTE: SYMBOL INCLUDES EQUIPMENT GROUND CONDUCTOR (NOT INDICATED).

ELECTRICAL GENERAL NOTES

1. GENERAL PROVISIONS
   A. ALL ELECTRICAL WORK MUST COMPLY WITH CEC 2013 BASED ON 2008 NEC.
   B. THE REQUIREMENTS OF THE SPECIFICATIONS, THE FOREGOING ARCHITECTURAL GENERAL NOTES AND MECHANICAL NOTES SHALL APPLY TO ALL WORK HEREUNDER.
   C. ALL WORK SHALL BE IN ACCORDANCE WITH 2013 CALIFORNIA ELECTRICAL CODE AND ALL APPLICABLE LOCAL, STATE AND FEDERAL CODES, LAWS AND REGULATIONS.
   D. CONTRACTOR IS DIRECTED TO OBTAIN AND REVIEW BUILDING CONSTRUCTION STANDARDS. WORK SHALL BE IN ACCORDANCE WITH BUILDING STANDARDS WHETHER OR NOT SUCH ARE REPEATED HEREIN OR ON PLANS. CONTRACTOR SHALL NOTIFY ARCHITECT OF ANY CONFLICTS BETWEEN BUILDING STANDARDS AND THESE DRAWINGS.
   E. CONTRACTOR SHALL VISIT SITE AND BE FULLY COGNIZANT OF ALL CONDITIONS PRIOR TO PROPOSAL. NOTIFY ARCHITECT OF DISCREPANCIES BETWEEN DOCUMENTS AND EXISTING CONDITIONS.
   F. ALL ELECTRICAL MATERIALS AND EQUIPMENT SHALL BE LISTED BY UNDERWRITER'S LABORATORIES OR RECOGNIZED TESTING AGENCY. FIRE ALARM SYSTEM EQUIPMENT SHALL ALSO BE APPROVED BY STATE FIRE MARSHALL.
2. SCOPE
   A. FURNISH AND INSTALL COMPLETE ALL MATERIALS, EQUIPMENT AND LABOR AS SHOWN AND AS NECESSARY FOR COMPLETE WORKABLE SYSTEM.
   B. OBTAIN AND PAY FOR ALL REQUIRED FEES, PERMITS AND INSPECTIONS.
   C. GUARANTEE ALL WORK AND MATERIALS FOR ONE YEAR FROM DATE OF FILING NOTICE OF COMPLETION.
   D. DISCONNECT AND REMOVE ALL DEVICES, CONDUIT AND WIRE NOT BEING REUSED WITHIN REMODEL AREAS. DETERMINE FROM OWNER EQUIPMENT TO BE SALVAGED. REMOVE ALL OTHER FROM SITE. SEAL ALL UNUSED FLOOR PENETRATIONS WITH APPROVED FIRE RATED ABANDONMENT PLUG. RECIRCUIT AS REQUIRED TO LEAVE AREAS ADJACENT TO REMODEL IN SERVICE.
3. SUBMITTALS
   A. PROVIDE CATALOG CUTS OR SHOP DRAWINGS FOR REVIEW AND APPROVAL PRIOR TO PROCUREMENT FOR THE FOLLOWING EQUIPMENT AND ITEMS:
      1. LIGHTING FIXTURES AND CONTROL DEVICES
      2. SWITCHES, OUTLETS AND WALL PLATES
4. RECORD DRAWINGS
   A. SUBMIT AT THE PROJECT COMPLETION AND PRIOR TO FINAL PAYMENT ONE SET OF RECORD PRINTS NOTING ACTUAL ROUTINGS OF CONDUITS, EQUIPMENT LOCATIONS, ETC., AS WELL AS ANY REVISIONS MADE TO DESIGN DRAWINGS. SUBMIT WITH RECORD PRINTS TWO COPIES OF AVAILABLE EQUIPMENT MANUALS, SERVICE RECOMMENDATIONS, GUARANTEES, ETC.
   B. CIRCUIT NUMBERS FOR ALL FIXTURES AND DEVICES (NEW AND EXISTING) WITHIN THE AREA OF WORK SHALL BE VERIFIED AND INDICATED ON RECORD DRAWINGS. PANEL SCHEDULES SHALL BE CORRECTED TO REFLECT ACTUAL INSTALLATION.
5. COORDINATION
   A. COORDINATE ALL WORK WITH ARCHITECTURAL, MECHANICAL AND STRUCTURAL DRAWINGS. INSTALL ALL WORK TO CLEAR NEW AND EXISTING ARCHITECTURAL AND STRUCTURAL MEMBERS. NO ITEM SUCH AS PIPE, DUCT, ETC. SHALL BE IN CONTACT WITH ANY ELECTRICAL EQUIPMENT.
   B. REFER TO ARCHITECTURAL DRAWINGS FOR EXACT LOCATION OF ALL FIXTURES, DEVICES, OUTLETS, ETC.
6. RELATED WORK
   A. SUBCONTRACTOR SHALL BE RESPONSIBLE FOR ALL CUTTING AND PATCHING NECESSARY FOR INSTALLATION OF HIS WORK.
   B. OBTAIN WRITTEN PERMISSION FROM ARCHITECT AND GENERAL CONTRACTOR BEFORE PROCEEDING WITH ANY CUTTING OR PATCHING OF STRUCTURAL SYSTEMS, INCLUDING FLOOR SLABS.
   C. REFINISH MARRED OR DAMAGED FACTORY FINISHED EQUIPMENT.
   D. CONNECT ALL CONTRACTOR AND OWNER FURNISHED EQUIPMENT AND PROVIDE AND INSTALL REQUIRED DISCONNECTING MEANS.
   E. RESTORE ALL DAMAGE RESULTING FROM YOUR WORK AND LEAVE PREMISES IN CLEAN CONDITION WHEN FINISHED WITH WORK.
7. FIRE AND LIFE SAFETY SYSTEM
   A. CONTRACT WITH BASE BUILDING LIFE SAFETY SYSTEM SUPPLIER FOR ALL NEW LIFE SAFETY SYSTEM WORK. INCLUDE LIFE SAFETY SYSTEM SUPPLIER'S FEE IN THE ELECTRICAL BID. CONTACT "CODE CONSULTANT INCORPORATED"
8. COMMUNICATION SYSTEM
   A. PROVIDE 3/4"CO FROM ALL TELEPHONE, DATA OR TEL/DATA OUTLETS STUBBED UP INTO ACCESSIBLE CEILING SPACE U.O.N.
9. DISTRIBUTION AND GROUNDING
   A. PANELBOARDS SHALL BE BOLTED TYPE CIRCUIT BREAKERS MATCHING BUILDING STANDARDS, WHERE BUILDING STANDARDS DO NOT DESIGNATE MANUFACTURER, PROVIDE SQUARE D NQOD OR GE OR ITE EQUIVALENT. ALL 15/1 AND 20/1 CIRCUIT BREAKERS SHALL BE "SWD" RATED AND MARKED.
   B. PROVIDE GROUNDING SYSTEM COMPLYING WITH THE CODES AND ORDINANCES SPECIFIED. GROUNDING SYSTEM SHALL PROVIDE CONTINUITY THROUGH ENTIRE ELECTRICAL SYSTEM.
10. CONDUIT AND RACEWAYS
    A. PROVIDE COMPLETE CONDUIT OR RACEWAY SYSTEM FOR ALL CIRCUITS AND WIRING OVER 100 VOLTS AND AS DESIGNATED FOR LOW VOLTAGE AND SIGNAL SYSTEMS CIRCUITS AND WIRING.
       1. ALL EXPOSED OR DAMP LOCATIONS OR LARGER THAN 2" SHALL BE GALVANIZED THICKWALL THREADED RIGID METAL CONDUIT WITH INSULATED BUSHINGS.
       2. INTERIOR DRY LOCATIONS ABOVE GROUND SHALL BE FREE AIR AND SECURED WITH "U" NAILS.
       3. CONNECTIONS TO MECHANICAL EQUIPMENT SHALL BE FLEXIBLE CONDUIT, MAXIMUM LENGTH 24", WITH PLASTIC BUSHED CONNECTIONS. 1/2" MINIMUM.
    B. RUN ALL WIRES CONCEALED WHEREVER POSSIBLE IN CEILING, WALL OR FLOOR SPACES. RUN CLOSE TO STRUCTURE, PARALLEL TO BUILDING LINES. EXPOSED RACEWAY SHALL TIGHTLY CONFORM TO BUILDING OUTLINES SO AS TO BE AS INCONSPICUOUS AS POSSIBLE.
    C. PROVIDE FISH-CORD IN ALL EMPTY CONDUIT.
    D. PROVIDE INSULATING BUSHINGS ON ALL TERMINATIONS OF CONDUIT.
    E. SUSPEND ALL CONDUIT RUNS. SINGLE AND DOUBLE RUNS OF 1/2" OR 3/4" CONDUIT AND SINGLE RUNS OF 1" C MAY BE ATTACHED TO 12 GAUGE OR HEAVIER CEILING SUSPENSION WIRES (WHERE PERMITTED BY LOCAL CODE AUTHORITIES). MULTIPLE CONDUIT RUNS AND SINGLE RUNS LARGER THAN 1" SHALL BE SUPPORTED DIRECTLY TO STRUCTURE OR SUSPENDED ON THREADED RODS TO CLEVIS MOUNTS OR UNISTRUCT TRAPEZES. THREADED ROD SUSPENSIONS FURTHER THAN 12" FROM STRUCTURE SHALL BE INSTALLED WITH STATE APPROVED SEISMIC SUPPORT AND BRACING SYSTEMS SUCH AS SUPER-STRUT KIN-LINE OR EQUIVALENT.
    F. ALL JUNCTION BOXES SHALL BE LABELED IDENTIFYING PANEL NUMBER AND CIRCUITS WHICH ROUTE THROUGH THE BOX.
    G. ALL ELECTRICAL CONDUIT OR RACEWAY CROSSING SEISMIC SEPARATION OR EXPANSION JOINTS SHALL BE PROVIDED WITH APPROVED FLEXIBLE CONNECTORS.
11. WIRE
    A. WIRE SHALL BE TYPE NM-B, 600 VOLT COPPER, BEARING UL LABEL. CONDUCTORS #8 OR LARGER SHALL BE STRANDED, CONDUCTORS #10 AND SMALLER SHALL BE SOLID. BRANCH CIRCUIT WIRE SHALL BE #12 MIN. FOR 120V. WIRE COLOR CODING SHALL MATCH EXISTING, AND SHALL BE NOTED ON AS-BUILT PLANS. BOTH ENDS OF ALL WIRE RUNS SHALL BE LABELED W/ NUMBERED PRESSURE LABELS. SPLICE ONLY IN ACCESSIBLE JUNCTION OR OUTLET BOXES. SCREW-ON CONNECTORS SHALL BE NEATLY INSTALLED; GROUPED, LACED OR CLIPPED, AND FANNED OUT TO/FROM TERMINAL.
12. DEVICES
    A. TYPES OF ALL SWITCHES, RECEPTACLES AND WALL PLATES SHALL BE AS APPROVED BY ARCHITECT. VERIFY MATERIALS AND COLOR AND LOCATION WITH ARCHITECT.
    B. RECEPTACLES SHALL BE NEMA 5-15R SPEC GRADE U.O.N. ON PLANS OR BY ARCHITECT. PROVIDE NEMA 5-20R FOR DEDICATED CIRCUIT OUTLETS.
    C. GFCI PROTECTION MUST BE PROVIDED FOR ALL FOOD PREPARATION AREAS PER 210.8 (B) (2) CEC 2010.
    D. SWITCHES SHALL BE RATED 120 VOLT SPEC GRADE.
    E. DEVICE HEIGHT (TO CENTER OF DEVICE): RECEPTACLES AND TELEPHONE JACKS – 15" IN OPEN WALL AREAS, 6" ABOVE SPLASH AT BUILT IN COUNTER OR LAVATORY LOCATIONS. SWITCHES – 48". CLOCK – 84". WALL TELEPHONE – 54". UNLESS OTHERWISE NOTED IN ARCHITECTURAL DRAWINGS.
    F. DEVICE INSTALLATION: DEVICES MOUNTED IN A COMMON WALL SHALL BE OFFSET HORIZONTALLY A MINIMUM OF 8" IN REGULAR WALLS AND 24" IN ONE-HOUR RATED OCCUPANCY SEPARATION WALLS. NO BOXES SHALL BE INSTALLED BACK TO BACK. ALL UNUSED HOLES IN BOXES SHALL BE SLUGGED OR SEALED.
13. LIGHTING
    A. PROVIDE LIGHTING FIXTURES OF SIZES, TYPES AND RATING INDICATED; COMPLETE WITH, BUT NOT LIMITED TO HOUSINGS, LAMPS, LAMP HOLDERS, BALLASTS, STARTERS, WIRING, AND MOUNTING HARDWARE. FIXTURE TYPE DESIGNATION FOR AN INDIVIDUAL FIXTURE SHALL BE TYPICAL FOR SIMILARLY INDICATED FIXTURES WITHIN THE ENTIRE ROOM OR DEFINED AREA. IN THE EVENT A FIXTURE IS UN-DESIGNATED ON PLANS, IT SHALL BE OF THE SAME TYPE AS FIXTURES OF SIMILAR FUNCTION WITHIN ROOMS OR AREAS.
    B. ALL LIGHTING FIXTURES SHALL BE PROVIDED WITH ALL REQUIRED OUTLET BOXES IN ACCORDANCE WITH CODE. FOR EXACT LOCATION OF ALL FIXTURES, REFER TO ARCHITECTURAL DRAWINGS.
    C. SUPPLY PLASTER FRAMES, TRIM RINGS, AND BACKBOXES TO OTHER TRADES. COORDINATE WITH ARCHITECTURAL REFLECTED CEILING PLAN AND MECHANICAL EQUIPMENT.
    D. ALL FIXTURES, LENSES, AND OTHER TRIM SHALL BE ALIGNED, CLEANED, FREE OF PAINT AND BLEMISHES BEFORE FINAL ACCEPTANCE. NO FIXTURE SUPPORT OR INSERT, EXCEPT PENDANT CANOPIES, SHALL BE VISIBLE FROM THE FLOOR.
    E. ALL INCANDESCENT LAMPS SHALL BE RATED FOR 130V OPERATION.

ABBREVIATIONS

(E)	EXISTING TO REMAIN	FU	FUSE	OFCI	OWNER FURNISHED, CONTRACTOR INSTALLED
(F)	FUTURE	GEC	GROUND ELECTRODE CONDUCTOR	OFOI	OWNER FURNISHED, OWNER INSTALLED
(N)	NEW TO BE FURNISHED AND INSTALLED BY THE CONTRACTOR	GEN	GENERATOR	P	POLE
(R)	EXISTING TO BE REMOVED	GFI	GROUND FAULT CIRCUIT INTERRUPTER	PB	PUSHBUTTON
(RE)	RELOCATED EXISTING	GND	GROUND	PH, ø	PHASE
(RL)	EXISTING TO BE REPLACED	HOA	HAND-OFF/AUTO SWITCH	PNL	PANEL
AB	ABOVE COUNTER BACKSPLASH	HP	HORSEPOWER	POC	POINT OF CONNECTION
AC	ALTERNATING CURRENT	HPF	HIGH POWER FACTOR	+,POS	POSITIVE
A, AMP	AMPERES AMPERE (RATED)	HZ	HERTZ (CYCLES PER SECOND)	PRI	PRIMARY
AF	FUSE OR CB FRAME	IER	INTEGRATED EQUIPMENT (SHORT CIRCUIT) RATING (RMS SYM. AMPS)	REQD	REQUIRED
AFF	ABOVE FINISHED FLOOR	IG	ISOLATED GROUND	SPDT	SINGLE POLE DOUBLE THROW
AFG	ABOVE FINISHED GRADE	K	KEY OPERATED	SPST	SINGLE POLE SINGLE THROW
ARS	AVAILABLE RMS SYMMETRICAL	KCMIL	THOUSAND CIRCULAR MILS	SUB	SUBSTATION
AS	AMPERE AMPERE (RATED) SWITCH	KW	KILOWATTS	SW	SWITCH
AT	CIRCUIT BRKR TRIP SETTING (AMPS)	KVA	KILOVOLT-AMPERES	SWBD	SWITCHBOARD
ATS	AUTOMATIC TRANSFER SWITCH	LTG	LIGHTING	SWGR	SWITCHGEAR
AUTO	AUTOMATIC AUXILIARY AMERICAN WIRE	MAX	MAXIMUM	TB	TERMINAL BOARD
AUX	GAUGE BATTERY BELOW GRADE	MCA	MINIMUM CIRCUIT AMPERES	TEL	TELEPHONE
AWG	CONDUIT (CIRCULAR RACEWAY)	MFR	MANUFACTURER	TYP	TYPICAL
BAT	CIRCUIT BREAKER	MIN	MINIMUM	UL	UNDERWRITERS LAB
BG	CALIFORNIA ELECTRICAL CODE	MISC	MISCELLANEOUS	UON	UNLESS OTHERWISE NOTED
C	CIRCUIT	MLO	MAIN LUGS ONLY	UPS	UNINTERRUPTIBLE POWER SUPPLY
CB	CEILING	MRS	MINIMUM RMS SYMMETRIC AMPERE (EQUIPMENT RATING)	V	VOLTS
CEC	CONDUIT ONLY			VA	VOLT-AMPERES
CKT	COPPER	MTD	MOUNTED	VFD	VARIABLE FREQUENCY DRIVE
CLG	DISCONNECT	MTR	MOTOR	W	WATT
CO	DIAMETER	-N-	NEUTRAL (GROUNDED CONDUCTOR)	W/	WITH
CU	DIVISION	NC	NORMALLY CLOSED	W/O	WITHOUT
DISC	EMERGENCY	NEC	NATIONAL ELECTRICAL CODE	WCR	WITHSTAND CURRENT RATING
DIA	ELECTRIC WATER COOLER	-,NEG	NEGATIVE	WP	WEATHERPROOF, SEE RECEPT. SYMBOL
DIV	ELECTRIC WATER HEATER	NEMA	NATIONAL ELECTRICAL MFGR'S ASSOC.	XFR	TRANSFORMER
E,EMERG	FURNISHED BY OTHERS	NL	NIGHT LIGHT (UNSWITCHED)	XP	EXPLOSION PROOF
EWC	FOOT CANDLES	NO	NORMALLY OPEN	Z	ZONE
EWH	FLUSH FLOOR MOUNTED	NTS	NOT TO SCALE		
FBO	FULL LOAD AMPERES				
FC	FLEXIBLE				
FF					
FLA					
FLEX					

ELECTRICAL DRAWING LIST

E-1.0 GENERAL NOTES, SYMBOLS LIST, ABBREVIATIONS, & SLD.
E-1.1 COMMUNITY CENTER LIGHTING PLAN
E-1.2 COMMUNITY CENTER POWER PLAN
E-2.0 RECREATION CENTER LIGHTING PLAN
E-2.1 RECREATION CENTER POWER PLAN
E-4.0 COMMUNITY CENTER TITLE 24 INDOOR COMPLIANCE FORMS
E-4.1 COMMUNITY CENTER TITLE 24 INDOOR COMPLIANCE FORMS
E-4.2 RECREATION CENTER TITLE 24 INDOOR COMPLIANCE FORMS
E-4.3 RECREATION CENTER TITLE 24 INDOOR COMPLIANCE FORMS

SC CONSULTING GROUP
24881 ALICIA PARKWAY #317
LAGUNA HILLS, CA 92653
949.280.4782
ed@sccg-inc.com
ARCHITECT * ENGINEER

REGISTERED PROFESSIONAL ENGINEER ... FERNANDEZ
No. E-012496
EXP. 9/30/15
ELECTRICAL
STATE OF CALIFORNIA

LINKTURE CONSULTING ENGINEERS
15 FLAGSTONE
TRABUCO CANYON, CA 92679
(949) 589-1909 PHONE
(909) 999-1188 FAX
email@linkture.com
www.linkture.com

MCMASTER PARK IMPROVEMENTS
3624 W. ARTESIA BOULEVARD, TORRANCE, CALIF

Sheet Title
GENERAL NOTES, SYMBOLS LIST, ABBREVIATIONS, & SINGLE LING DIAG.

REVISIONS		
No.	Description	Date
~~A~~	~~Health Dept Review Set~~	~~11-01-13~~
1	GENERAL REVISIONS	09-03-14

Drawn	ecc
Project #	13-6018
Plot Date	07-25-14

Scale:

THIS DOCUMENT, WHICH INCORPORATES THE DESIGN CONCEPTS, DRAWINGS, SPECIFICATIONS AND WRITTEN MATERIAL CONTAINED HEREIN, AS AN INSTRUMENT OF SERVICE, IS THE PROPERTY OF LINKTURE CORP AND CANNOT BE COPIED OR USED IN WHOLE OR IN PART FOR ANY OTHERS BUT ITS ORIGINAL PURPOSE, WITHOUT THE WRITTEN AUTHORIZATION OF LINKTURE CORP.©

E-1.0

Sheet Number of

(E) PANEL "A"

VOLTAGE, PHASE, WIRES: **120/240V, 1 PHASE, 3W** ENCLOSURE: **NEMA 1** BRACING: **10KAIC**
BUS RATING: **225A BUS** MAIN: **LUG ONLY** MOUNTING: **FLUSH MOUNT**

CKT NO.	CKT BKR AMPS	P	QTY LTG	QTY REC	QTY MISC	DESCRIPTION	LOAD (WATTS) LOAD	AØ	BØ	LOAD	DESCRIPTION	QTY MISC	QTY REC	QTY LTG	CKT BKR P	CKT BKR AMPS	CKT NO.	
1	20			4		MULTIPURP. RM. RECEPT.	720	1044		324	LOBBY, HALLWAY LTS.			6	1	20	2	CL
3	20			6		MEETING RM. RECEPT.	1080		1350	270	REST RM. LTS.			5	1	20	4	CL
5	20			2		POLICE RM. RECEPT.	360	792		432	MULTI PURP LTS.			8	1	20	6	CL
7	20			3		REST RM. RECEPT.	540		864	324	MEETING RM LTS.			6	1	20	8	CL
9	20			1		DATA RM. RECEPT	180	396		216	POLICE RM. LTS			4	1	20	10	CL
11	30	2			1	HVAC	1800		2184	384	OUTDOOR LTS.			6	1	20	12	CL
13							1800	1800			SPACE						14	
15	20	1		1		HVAC MAINT. RECEPT.	360		360		SPACE						16	
17	20	1				SPARE		0			SPACE						18	
19	20	1				SPARE			0		SPACE						20	
21	20	1				SPARE		0			SPACE						22	
23	20	1				SPARE			0		SPACE						24	
25	20	1				SPARE		0			SPACE						26	
27	20	1				SPARE			0		SPACE						28	
29						SPACE		0			SPACE						30	
31						SPACE			0		SPACE						32	
33						SPACE		0			SPACE						34	
35						SPACE			0		SPACE						36	
						PHASE TOTALS (WATTS)		4032	4758									
						PHASE BALANCE	8%	46%	54%									
						TOTAL CONNECTED LOAD (WATTS)		8790										
						25%OF LONG CONTINUOUS LOAD (LCL) AND LARGEST MOTOR		487.5										
						TOTAL LOAD (WATTS)		9277.5										
						TOTAL LOAD (AMPS)		**38.7**										

NOTE: CL = LONG CONTINUOUS LOAD
LML = LARGEST MOTOR LOAD
UM = UTILITY MAIN CIRCUIT BREAKER
GM = GENERATOR MAIN CIRCUIT BREAKER

SEE SINGLE LINE DIAGRAM FOR WIRING DIAGRAM

(N) PANEL "B"

VOLTAGE, PHASE, WIRES: **120/240V, 1 PHASE, 3W** ENCLOSURE: **NEMA 1** BRACING: **10KAIC**
BUS RATING: **100A BUS** MAIN: **LUG ONLY** MOUNTING: **FLUSH MOUNT**

	CKT NO.	CKT BKR AMPS	P	QTY LTG	QTY REC	QTY MISC	DESCRIPTION	LOAD (WATTS) LOAD	AØ	BØ	LOAD	DESCRIPTION	QTY MISC	QTY REC	QTY LTG	CKT BKR P	CKT BKR AMPS	CKT NO.	
	1	20	1		3		KITCHEN RECEPT.	540	712		172	KITCHEN LIGHTS			2	1	20	2	CL
LML	3	20	1			1	KITCHEN DISPOSER	900		1548	648	SR. COM. CTR. LTS.			12	1	20	4	CL
	5	20	1			1	KITCHEN EX. FAN	200	308		108	NW OFFICE LTS.			2	1	20	6	CL
	7	20	1		2		KITCHEN RECEPT.	360		1192	832	OUTDOOR LTS.			13	1	20	8	CL
	9	20	1			1	KITCHEN DISHWASH	1500	1716		216	STORAGE RM.			4	1	20	10	CL
	11	20	1			1	KITCHEN REFRIG.	650		650		SPACE						12	
	13	20	1			1	UTILITY PUMP	500	500			SPACE						14	
	15	20	1		7		SR. COMMUNITY CTR.	1260		1260		SPACE						16	
	17	20	1		3		NW OFFICE	540	540			SPACE						18	
	19	20	1				SPARE			0		SPACE						20	
	21	20	1				SPARE		0			SPACE						22	
	23	20	1				SPARE			0		SPACE						24	
							PHASE TOTALS (WATTS)		3776	4650									
							PHASE BALANCE	10%	45%	55%									
							TOTAL CONNECTED LOAD (WATTS)		8426										
							25%OF LONG CONTINUOUS LOAD (LCL) AND LARGEST MOTOR		719										
							TOTAL LOAD (WATTS)		9145										
							TOTAL LOAD (AMPS)		**38.1**										

NOTE: CL = LONG CONTINUOUS LOAD
LML = LARGEST MOTOR LOAD
UM = UTILITY MAIN CIRCUIT BREAKER
GM = GENERATOR MAIN CIRCUIT BREAKER

SEE SINGLE LINE DIAGRAM FOR WIRING DIAGRAM

FIXTURE LIST

TYPE	WATTS	No	LAMPS TYPE	VOLTS 120	VOLTS 277	VOLTS 480	MOUNTING RECESS	MOUNTING PEND	MOUNTING WALL	MOUNTING FACE	MOUNTING GRND	MOUNTING POLE	MANUFACTURER	CATALOG No.	REMARKS
A	23	1	23W CFL-SPIRAL	●				●					LITHONIA	11832 KR	CONTEMPORARY FIXTURE
B	56	3	F28T5	●				●					LITHONIA	2SP-3-28T5-A12-120V-GEB10PS	2'X4' RECESSED MOUNT FLUORESCENT FIXTURE
BE	56	3	F28T5	●				●					LITHONIA	2SP-3-28T5-A12-120V-GEB10PS-EL14	2'X4' RECESSED MOUNT FLUORESCENT FIXTURE WITH EMERGENCY BATTERY PACK
C	64	2	F32T8	●				●					LITHONIA	M-2-32-A19-MVOLT-GEB10IS	4' SURFACE MOUNT FLUORESCENT FIXTURE
CE	64	2	F32T8	●				●					LITHONIA	M-2-32-A19-MVOLT-GEB10IS-EL14	4' SURFACE MOUNT FLUORESCENT FIXTURE WITH EMERGENCY BATTERY PACK
E	46	1	42W CFL TRT	●					●				RAB LIGHTING	WP1F42W	WALL MOUNT LUMINAIRE DARK BRONZE
F	46	1	42W CFL TRT	●				●					RAB LIGHTING	VAN3F42QT/PC	CEILING MOUNT LUMINAIRE DARK BRONZE
G	1.5	1	LED	●				●					LITHONIA	ECBG LED M6 120/277	GREEN EXIT SIGN WITH LED AND BATTERY BACK
H	52	5	LED	●					●				RAB LIGHTING	GPLED52	PENDANT MOUNT DOWNLIGHT FIXTURE, PROVIDE NECESSARY MOUNTING ACCESSORIES DARK BRONZE

GENERAL NOTES:

1. ALL OUTDOOR FIXTURES SHALL BE ON ASTRONOMICAL TIMER.
2. FIELD VERIFY EXISTING CIRCUITS AND ADJUST NEW CIRCUITS ACCORDINGLY.

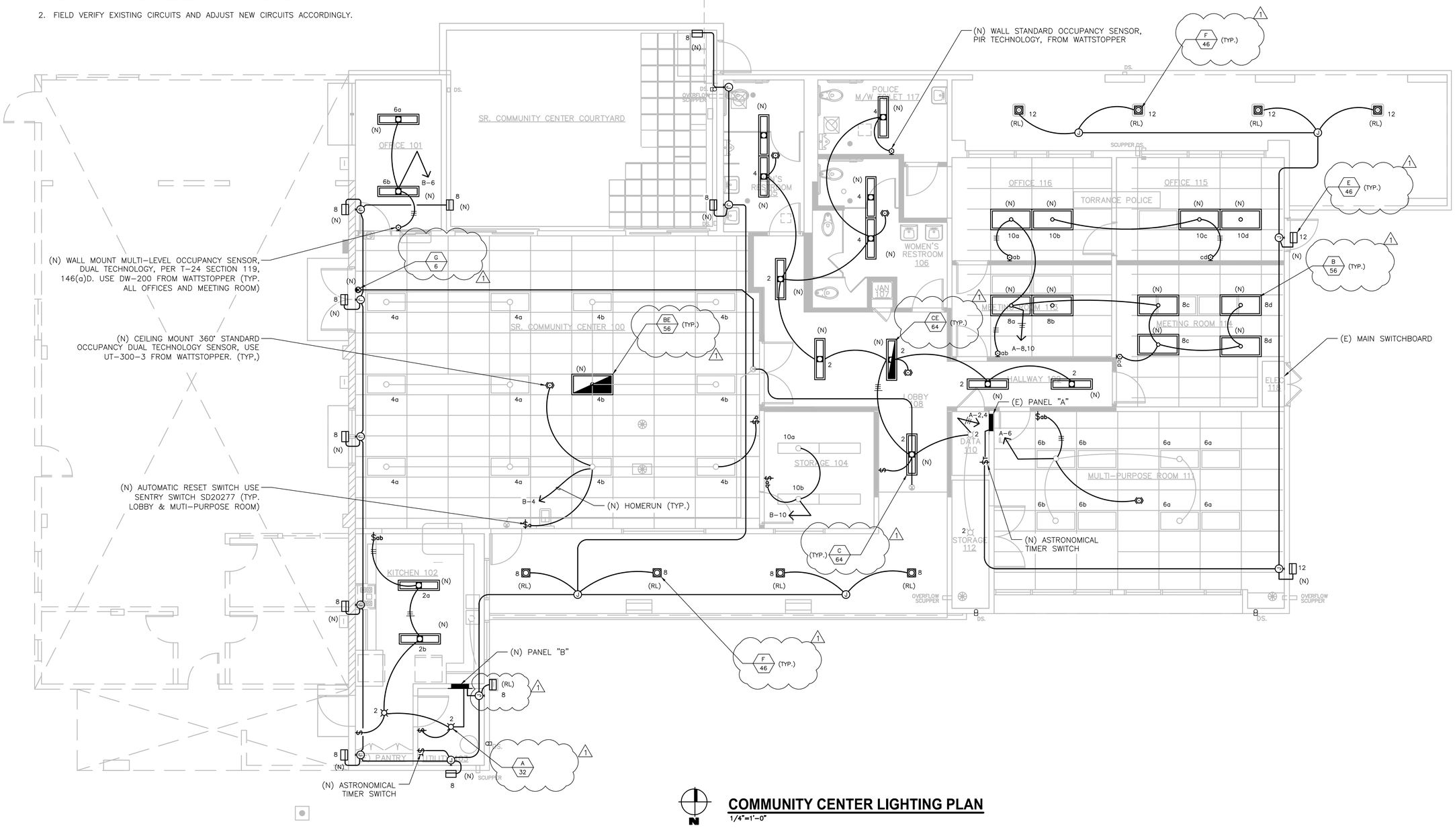

COMMUNITY CENTER LIGHTING PLAN

1/4"=1'-0"

SC CONSULTING GROUP
24881 ALICIA PARKWAY #317
LAGUNA HILLS, CA 92653
949.280.4782
ed@sccg-inc.com
ARCHITECT • ENGINEER

REGISTERED PROFESSIONAL ENGINEER
ED FERRARA
No. E-012496
EXP. 9/30/15
ELECTRICAL
STATE OF CALIFORNIA

LINKTURE CONSULTING ENGINEERS
15 FLAGSTONE
TRABUCO CANYON, CA 92679
(949) 589-9988 PHONE
(949) 999-1188 FAX
email@linkture.com
www.linkture.com

MCMASTER PARK IMPROVEMENTS

3624 W. ARTESIA BOULEVARD,
TORRANCE, CALIF

Sheet Title
COMMUNITY CENTER LIGHTING PLAN

REVISIONS No.	Description	Date
1	~~Hamb Dept Remsr Set~~	~~11-01-13~~
1	GENERAL REVISIONS	09-03-14

Drawn	ecc
Project #	13-6018
Plot Date	07-25-14

Scale:

THIS DOCUMENT, WHICH INCORPORATES THE DESIGN CONCEPTS, DRAWINGS, SPECIFICATIONS AND WRITTEN MATERIAL CONTAINED HEREIN, AS AN INSTRUMENT OF SERVICE, IS THE PROPERTY OF LINKTURE CORP. AND CANNOT BE COPYRIGHTED, USED IN WHOLE OR IN PART BY OTHERS FOR BUT ITS ORIGINAL PURPOSE, WITHOUT THE WRITTEN AUTHORIZATION OF LINKTURE CORP. ©

E-1.1

Sheet Number of

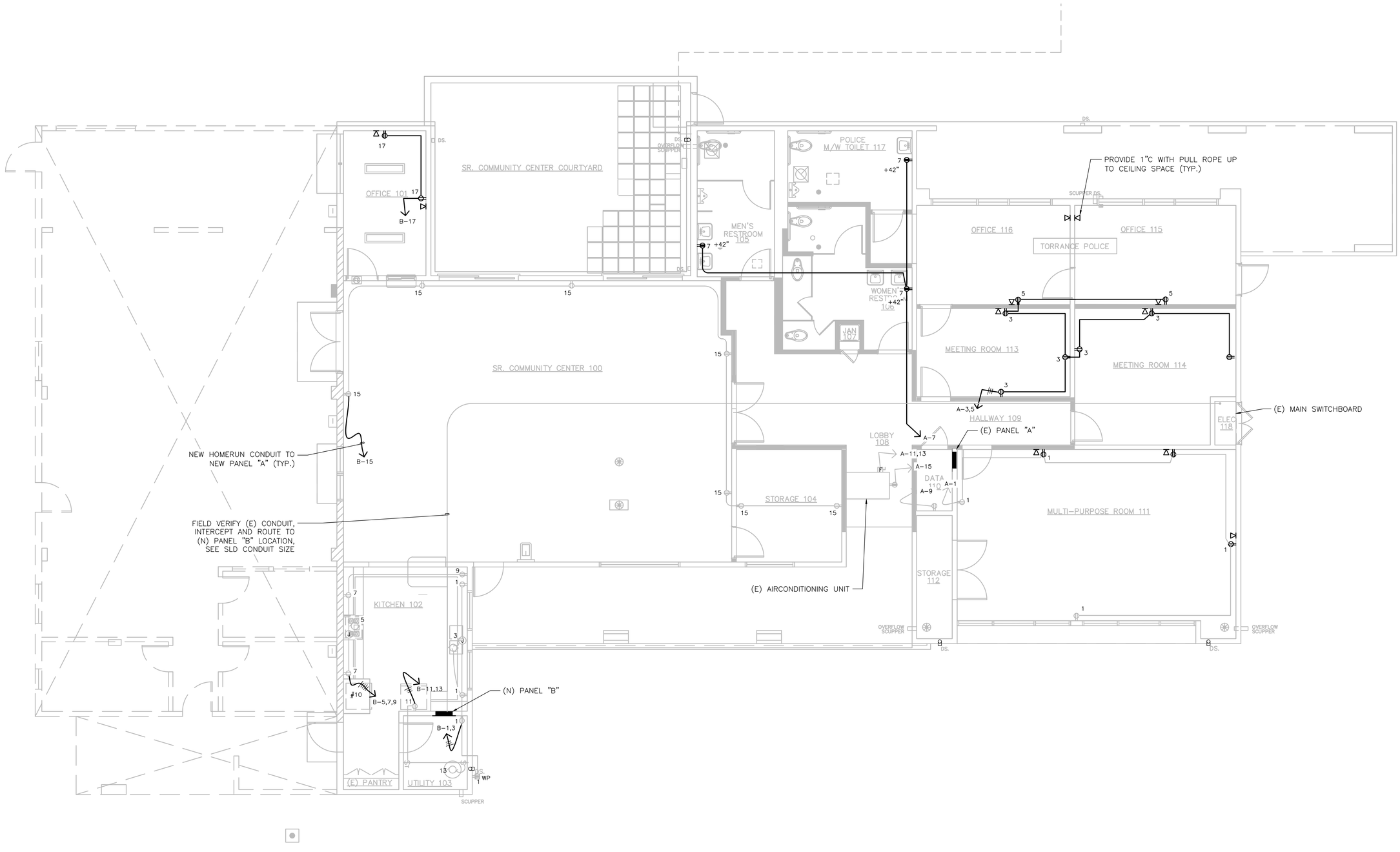

COMMUNITY CENTER POWER PLAN

1/4"=1'-0"

SC CONSULTING GROUP
24881 ALICIA PARKWAY #317
LAGUNA HILLS, CA 92653
949.280.4782
ed@sccg-inc.com
ARCHITECT • ENGINEER

REGISTERED PROFESSIONAL ENGINEER
DEAN R. FERNANDEZ
No. E-012496
EXP. 9/30/15
ELECTRICAL
STATE OF CALIFORNIA

LINKTURE CONSULTING ENGINEERS
15 FLAGSTONE
TRABUCO CANYON, CA 92679
(949) 589-1909 PHONE
(909) 999-1188 FAX
email@linkture.com
www.linkture.com

MCMASTER PARK IMPROVEMENTS

3624 W. ARTESIA BOULEVARD,
TORRANCE, CALIF

Sheet Title
COMMUNITY CENTER LIGHTING PLAN

REVISIONS

No.	Description	Date
~~A~~	~~Health Dept Review Set~~	~~11-01-13~~
1	GENERAL REVISIONS	09-03-14

Drawn	ecc
Project #	13-6018
Plot Date	07-25-14

Scale:

THIS DOCUMENT, WHICH INCORPORATES THE DESIGN CONCEPTS, DRAWINGS, SPECIFICATIONS AND WRITTEN MATERIAL CONTAINED HEREIN, AS AN INSTRUMENT OF SERVICE, IS THE PROPERTY OF LINKTURE CORP AND CANNOT BE COPIED OR USED IN WHOLE OR IN PART FOR ANY OTHERS BUT ITS ORIGINAL PURPOSE, WITHOUT THE WRITTEN AUTHORIZATION OF LINKTURE CORP. ©

E-1.2

Sheet Number of

(N) PANEL "A"

VOLTAGE, PHASE, WIRES: **120/240V, 1 PHASE, 3W** ENCLOSURE: **NEMA 1** BRACING: **10KAIC**
BUS RATING: **100A BUS** MAIN: **LUG ONLY** MOUNTING: **FLUSH MOUNT**

	CKT NO.	CKT BKR AMPS	P	QTY LTG	QTY REC	QTY MISC	DESCRIPTION	LOAD (WATTS) AØ	LOAD (WATTS) BØ	LOAD	DESCRIPTION	QTY MISC	QTY REC	QTY LTG	CKT BKR P	CKT BKR AMPS	CKT NO.	
	1	20	1		3		KITCHEN RECEPTACLES	540	648	108	KITCHEN LIGHTS			2	1	20	2	CL
	3	20	1			1	KITCHEN REFRIG.	650	812	162	RESTRM, HALLWY LTS.			3	1	20	4	CL
LML	5	20	1			3	CHILDCARE CTR. FANS	330	842	512	OUTDOOR LTS.			8	1	20	6	CL
	7	20	1		4		OUTDOOR RECEPT.	720	4720	4000	OVEN/RANGE				2	50	8	
	9	20	1		2		RESTROOM RECEPT.	360	4360	4000							10	
	11	20	1			1	KITCHEN HOOD FAN	110		110	SPARE				1	20	12	
	13	20	1		2		STORAGE RM. RECEPT.	360	360		SPARE				1	20	14	
	15	20	1		6		CHILDCARE RM. RECEPT.	1080		1080	SPACE						16	
	17	20	1				SPARE		0		SPACE						18	
	19	20	1				SPARE			0	SPACE						20	
	21	20	1				SPARE		0		SPACE						22	
	23	20	1				SPARE			0	SPACE						24	
	25	20	1				SPARE		0		SPACE						26	
	27	20	1				SPARE			0	SPACE						28	
	29	20	1				SPARE		0		SPACE						30	
	31	20	1				SPARE			0	SPACE						32	
	33	100	2				PANEL B	3158	3158		SPACE						34	
	35							2440		2440	SPACE						36	

PHASE TOTALS (WATTS)	9367.5	9162
PHASE BALANCE	1%	51% 49%
TOTAL CONNECTED LOAD (WATTS)	18529.5	
25% OF LONG CONTINUOUS LOAD (LCL) AND LARGEST MOTOR	195.5	
TOTAL LOAD (WATTS)	18725	
TOTAL LOAD (AMPS)	**78.0**	

NOTE: CL = LONG CONTINUOUS LOAD
LML = LARGEST MOTOR LOAD
UM = UTILITY MAIN CIRCUIT BREAKER
GM = GENERATOR MAIN CIRCUIT BREAKER

SEE SINGLE LINE DIAGRAM FOR WIRING DIAGRAM

(E) PANEL "B"

VOLTAGE, PHASE, WIRES: **120/240V, 1 PHASE, 3W** ENCLOSURE: **NEMA 1** BRACING: **10KAIC**
BUS RATING: **100A BUS** MAIN: **100A MAIN C.B.** MOUNTING: **FLUSH MOUNT**

CKT NO.	CKT BKR AMPS	P	QTY LTG	QTY REC	QTY MISC	DESCRIPTION	LOAD (WATTS) AØ	LOAD (WATTS) BØ	LOAD	DESCRIPTION	QTY MISC	QTY REC	QTY LTG	CKT BKR P	CKT BKR AMPS	CKT NO.	
1	20	1		3		KITCHEN RECEPTACLES	540	756	216	KITCHEN LIGHTS			4	1	20	2	CL
3	20	1			1	KITCHEN REFRIG.	650	866	216	RESTRM LTS.			4	1	20	4	CL
5	20	1				SPARE	1302		1302	OUTDOOR LTS.			21	1	20	6	CL
7	20	1		4		OUTDOOR RECEPT.	720	1080	360	STORAGE RM. RECEPT.		2		1	20	8	
9	20	1		2		RESTROOM RECEPT.	360	720	360	RECREATION RECEPT.		2		1	20	10	
11	20	1			1	KITCHEN HOOD FAN	110	440	330	RECREATIONSL FANS	3			1	20	12	LML
13	20	1				SPARE	0			SPACE						14	
15	20	1				SPARE		0		SPACE						16	
17	20	1				SPARE	0			SPACE						18	

PHASE TOTALS (WATTS)	2778	2386
PHASE BALANCE	8% 54%	46%
TOTAL CONNECTED LOAD (WATTS)	2778	2386
25% OF LONG CONTINUOUS LOAD (LCL) AND LARGEST MOTOR	380	54
TOTAL LOAD (WATTS)	3158	2440
TOTAL LOAD (AMPS)	**23.3**	

NOTE: CL = LONG CONTINUOUS LOAD
LML = LARGEST MOTOR LOAD
UM = UTILITY MAIN CIRCUIT BREAKER
GM = GENERATOR MAIN CIRCUIT BREAKER

SEE SINGLE LINE DIAGRAM FOR WIRING DIAGRAM

GENERAL NOTES:

1. ALL OUTDOOR FIXTURES SHALL BE ON ASTRONOMICAL TIMER.
2. FIELD VERIFY EXISTING CIRCUITS AND ADJUST NEW CIRCUITS ACCORDINGLY.

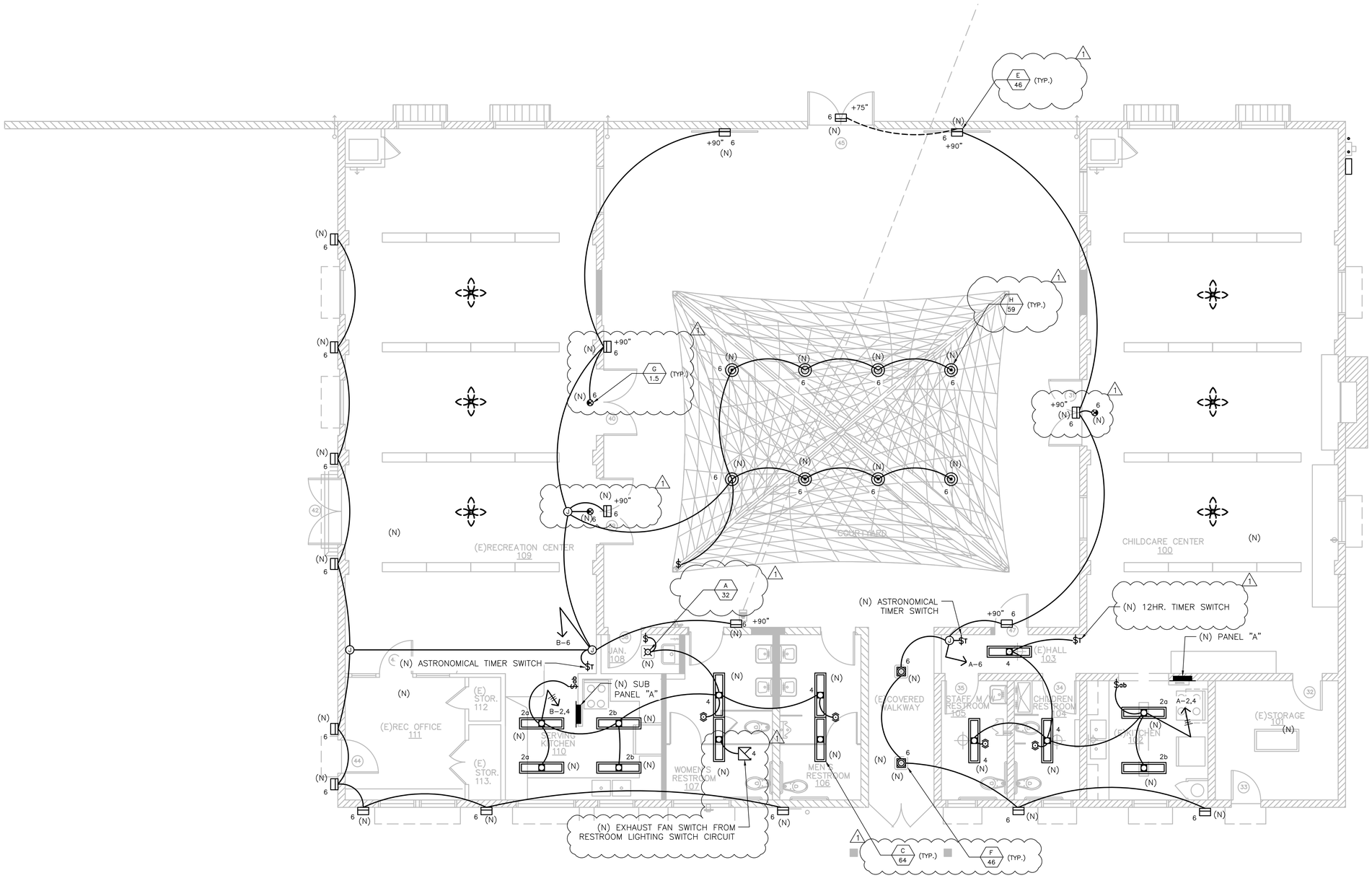

RECREATIONAL CENTER LIGHTING PLAN

1/4"=1'–0"

SC CONSULTING GROUP
24881 ALICIA PARKWAY #317
LAGUNA HILLS, CA 92653
949.280.4782
ed@sccg-inc.com
ARCHITECT • ENGINEER

REGISTERED PROFESSIONAL ENGINEER
ED FERNANDEZ
No. E-012496
EXP. 9/30/15
ELECTRICAL
STATE OF CALIFORNIA

LINKTURE CONSULTING ENGINEERS
15 FLAGSTONE
TRABUCO CANYON, CA 92679
(949) 858-1998 PHONE
(949) 999-1188 FAX
email@linkture.com
www.linkture.com

MCMASTER PARK IMPROVEMENTS

3624 W. ARTESIA BOULEVARD,
TORRANCE, CALIF

Sheet Title

RECREATION CENTER LIGHTING PLAN

REVISIONS		
No.	Description	Date
~~A~~	~~Hoehl Dept Review Set~~	~~11-01-13~~
1	GENERAL REVISIONS	09-03-14

Drawn	ecc
Project #	13-6018
Plot Date	07-25-14

Scale:

THIS DOCUMENT, WHICH INCORPORATES THE DESIGN CONCEPTS, DRAWINGS, SPECIFICATIONS AND WRITTEN MATERIAL CONTAINED HEREIN, AS AN INSTRUMENT OF SERVICE, IS THE PROPERTY OF LINKTURE AND SHALL NOT BE REUSED OR MODIFIED IN ANY WAY. IT IS NOT TO BE USED IN PART OR IN WHOLE FOR ANY OTHER BUILDING OR ITS ORIGINAL PURPOSE, WITHOUT THE WRITTEN AUTHORIZATION OF LINKTURE CORP. ©

E-2.0

Sheet Number of

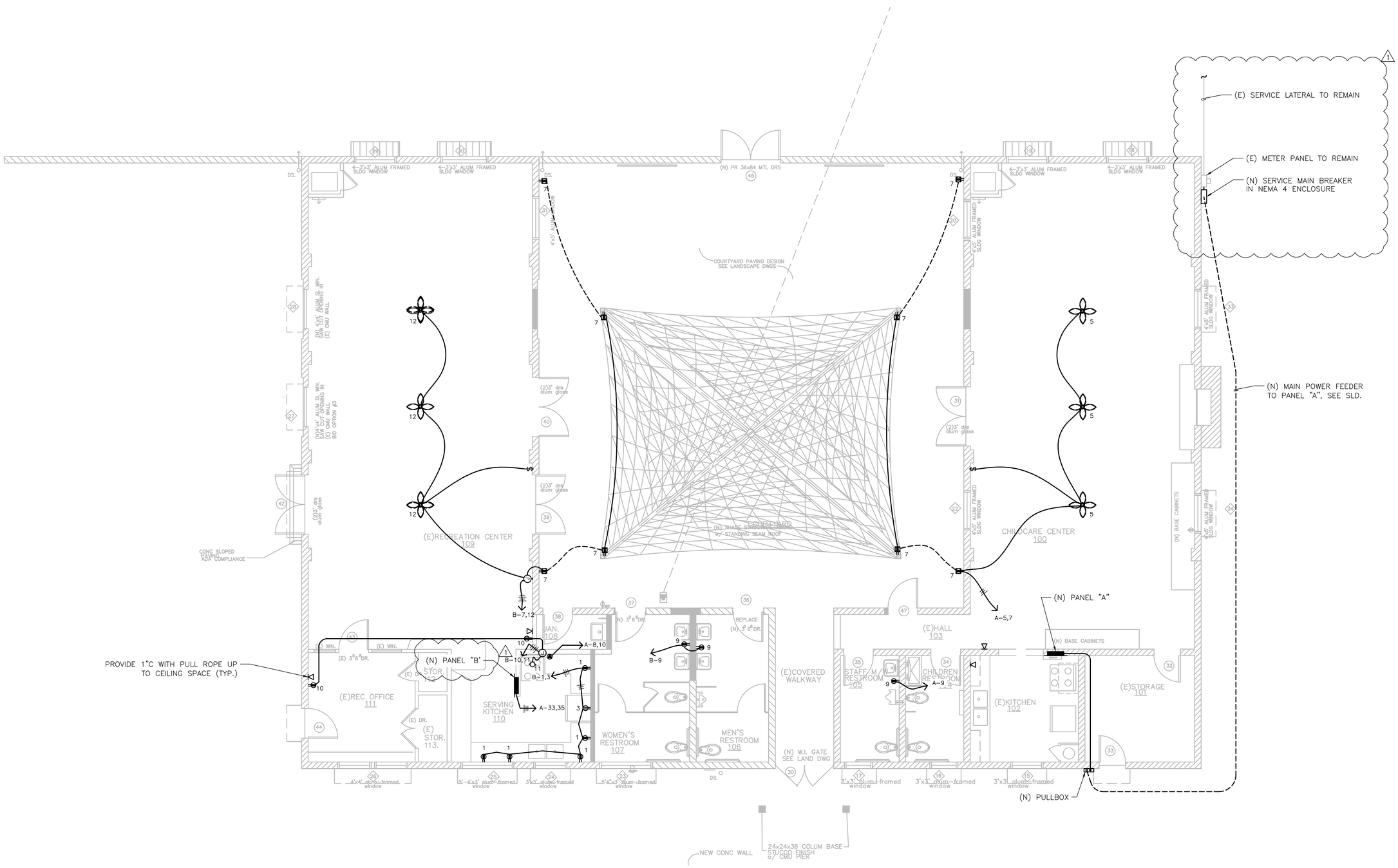

RECREATIONAL CENTER POWER PLAN

1/4"=1'-0"

SC CONSULTING GROUP
24881 ALICIA PARKWAY #317
LAGUNA HILLS, CA 92653
949.280.4782
ed@sccg-inc.com
ARCHITECT • ENGINEER

REGISTERED PROFESSIONAL ENGINEER
DEAN R. FERNANDEZ
No. E-012496
EXP. 9/30/15
ELECTRICAL
STATE OF CALIFORNIA

LINKTURE CONSULTING ENGINEERS
15 FLAGSTONE
TRABUCO CANYON, CA 92679
(949) 589-1900 PHONE
(909) 999-1188 FAX
email@linkture.com
www.linkture.com

MCMASTER PARK IMPROVEMENTS

3624 W. ARTESIA BOULEVARD,
TORRANCE, CALIF

Sheet Title

RECREATION CENTER POWER PLAN

REVISIONS

No.	Description	Date
~~A~~	~~Health Dept Revision Set~~	~~11-01-13~~
1	GENERAL REVISIONS	09-03-14

Drawn	ecc
Project #	13-6018
Plot Date	07-25-14

Scale:

THIS DOCUMENT, WHICH INCORPORATES THE DESIGN CONCEPTS, DRAWINGS, SPECIFICATIONS AND WRITTEN MATERIAL CONTAINED HEREIN, AS AN INSTRUMENT OF SERVICE, IS THE PROPERTY OF LINKTURE CORP AND CANNOT BE COPIED OR USED IN WHOLE OR IN PART FOR ANY OTHERS BUT ITS ORIGINAL PURPOSE, WITHOUT THE WRITTEN AUTHORIZATION OF LINKTURE CORP. ©

E-2.1

Sheet Number of

STATE OF CALIFORNIA
CERTIFICATE OF COMPLIANCE AND FIELD INSPECTION CHECKLIST
CEC-LTG-1C (Revised 08/09) CALIFORNIA ENERGY COMMISSION

CERTIFICATE OF COMPLIANCE (Page 1 of 4) LTG-1C

Project Name: McMASTER PARK IMPROVEMENTS - COMMUNITY CENTER			Date: 08-06-2013
Project Address: 3624 WEST ARTESIA BOULEVARD TORRANCE, CA. 50503		Climate Zone: 6	Building CFA : 3312 SQ. FT. / Unconditioned Floor Area :

General Information

Building Type:	☑ Nonresidential	☐ High-Rise Residential	☐ Hotel/Motel
☐ Schools	☐ Relocatable Public Schools	☐ Conditioned Spaces	☐ Unconditioned Spaces
Phase of Construction:	☑ New Construction	☐ Addition	☐ Alteration
Method of Compliance:	☐ Complete Building	☑ Area Category	☐ Tailored

Documentation Author's Declaration Statement

- I certify that this Certificate of Compliance documentation is accurate and complete.

Name: OPTY FERNANDEZ	Signature:
Company: LINKTURE CORPORATION	Date : 03-07-2012
Address: 15 FLAGSTONE	If applicable: CEA # CEPE #
City/State/Zip TRABUCO CANYON, CA. 92679	Phone: (949) 589 -1909

Principal Lighting Designer's Declaration Statement

- I am eligible under Division 3 of the California Business and Professions Code to accept responsibility for the lighting design.
- This Certificate of Compliance identifies the lighting features and performance specifications required for compliance with Title 24, Pages 1 and 6 of the California Code of Regulations.
- The design features represented on this Certificate of Compliance are consistent with the information provided to document this design on the other applicable compliance forms, worksheets, calculations, plans and specifications submitted to the enforcement agency for approval with this building permit application.

Name: OPTY FERNANDEZ	Signature:
Company: LINKTURE CORPORATION	Phone: (949) 589 -888
Address: 15 FLAGSTONE	License # E-012496
City/State/Zip: TRABUCO CANYON, CA. 92679	Date: 08-06-2013

Lighting Mandatory Measures
Indicate location on building plans of Mandatory Measures Note Block: ______________________

LIGHTING COMPLIANCE FORMS & WORKSHEETS (check box if worksheet is included)

For detailed instructions on the use of this and all Energy Efficiency Standards compliance forms, please refer to the Nonresidential Manual published by the California Energy Commission.

☑	LTG-1C Pages 1 through 4	Certificate of Compliance. All Pages required on plans for all submittals.
☐	LTG-2C	Lighting Controls Credit Worksheet
☑	LTG-3C	Indoor Lighting Power Allowance
☐	LTG-4C Pages 1 through 4	Tailored Method Worksheet
☐	LTG-5C Pages 1 and 2	Line Voltage Track Lighting Worksheet

STATE OF CALIFORNIA
CERTIFICATE OF COMPLIANCE AND FIELD INSPECTION CHECKLIST
CEC-LTG-1C (Revised 08/09) CALIFORNIA ENERGY COMMISSION

CERTIFICATE OF COMPLIANCE (Page 2 of 4) LTG-1C

INDOOR LIGHTING SCHEDULE and FIELD INSPECTION ENERGY CHECKLIST

Project Name: McMASTER PARK IMPROVEMENTS - COMMUNITY CENTER — Date: 08-06-2013

Installation Certificate, LTG-1-INST (Retain a copy and verify form is completed and signed.) ☐ **Field Inspector**

Certificates of Acceptance, LTG-2A and LTG-3A (Retain a copy and verify form is completed and signed.) ☐ **Field Inspector**

A separate Lighting Schedule Must Be Filled Out for Conditioned and Unconditioned Spaces Installed Lighting Power listed on this Lighting Schedule is only for: ☑ **CONDITIONED SPACE** ☐ **UNCONDITIONED SPACE**

☑ *The actual indoor lighting power listed below includes all installed permanent and portable lighting systems in accordance with §146(a)*

☐ *Only for offices: Up to the first 0.2 watts per square foot of portable lighting shall not be required to be included in the calculation of actual indoor lighting power density in accordance with the Exception to §146(a). All portable lighting in excess of 0.2 watts per square foot is totaled below.*

A	B	C	D	E		F	G	H	
Name or Item Tag	Luminaire Schedule (Type, Lamps, Ballasts) — Complete Luminaire Description (i.e, 3 lamp fluorescent troffer, F32T8, one dimmable electronic ballast)		Watts per Luminaire [1]	How wattage was determined: CEC Default from NA8	According to §130 (d or e)	Number of Luminaires	Installed Watts (D x F)	Field Inspector [2] Pass	Fail
A	1 CFL, CFTR32W/GWX24Q-3 ELECTRONIC BALLAST		35	☑	☐	2	70	☐	☐
B	2 LAMP TROFFER, F32T8, INSTANT START BALLAST		54	☑	☐	30	1620	☐	☐
C	2 LAMP SURFACE MT., F32T8, INSTANT START BALLAST		54	☑	☐	10	540	☐	☐
D	2 LAMP SURF. MT., F32T8/30ES, INSTANT START BALLAST		54	☑	☐	5	270	☐	☐
				☐	☐		0	☐	☐
						INSTALLED WATTS PAGE TOTAL:	2500		

Building total number of pages	1	Installed Watts Building Total (Sum of all pages)	2500
		Enter into LTG-1C Page 4 of 4	

1. Wattage shall be determined according to Section 130(d and e). Wattage shall be rating of light fixture, not rating of bulb.
2. If Fail then describe on Page 2 of the Inspection Checklist Form and take appropriate action to correct. Verify building plans if necessary.

STATE OF CALIFORNIA
CERTIFICATE OF COMPLIANCE AND FIELD INSPECTION CHECKLIST
CEC-LTG-1C (Revised 08/09) CALIFORNIA ENERGY COMMISSION

CERTIFICATE OF COMPLIANCE (Page 3 of 4) LTG-1C

Project Name: McMASTER PARK IMPROVEMENTS - COMMUNITY CENTER — Date: 08-06-2013

INDOOR LIGHTING SCHEDULE and FIELD INSPECTION ENERGY CHECKLIST

Fill in controls for all spaces: a) area controls, b) multi-level controls, c) manual daylighting controls for daylit areas > 250 ft², automatic daylighting controls for daylit areas > 2,500 ft², d) shut-off controls, e) display lighting controls, f) tailored lighting controls - general lighting controlled separately from display, ornamental and display case lighting and g) demand responsive automatic controls for retail stores > 50,000 ft², in accordance with Section 131.

MANDATORY LIGHTING CONTROLS - FIELD INSPECTION ENERGY CHECKLIST

Type / Description	Number of Units	Location in Building		Field Inspector Pass	Fail
MOTION SENSOR & MANUAL SHUT-OFF	1	SENIOR COMMUNITY CENTER		☐	☐
MOTION SENSOR & MANUAL SHUT-OFF	3	OFFICES		☐	☐
MOTION SENSOR & MANUAL SHUT-OFF	2	MEETING ROOM		☐	☐
MANUAL SWITCH	1	KITCHEN		☐	☐
MOTION SENSOR	2	MENS & WOMENS RESTROOM		☐	☐
MANUAL SWITCH	1	UTILITY ROOM		☐	☐
MOTION SENSOR	1	POLICE MAIN TOILET		☐	☐

Field Inspector's Notes or Discrepancies:

STATE OF CALIFORNIA
CERTIFICATE OF COMPLIANCE AND FIELD INSPECTION CHECKLIST
CEC-LTG-1C (Revised 08/09) CALIFORNIA ENERGY COMMISSION

CERTIFICATE OF COMPLIANCE (Page 4 of 4) LTG-1C

Project Name: McMASTER PARK IMPROVEMENTS - COMMUNITY CENTER — Date: 08-06-2013

Conditioned and Unconditioned space Lighting must not be combined for compliance

Indoor Lighting Power for Conditioned Spaces	Watts	Indoor Lighting Power for Unconditioned Spaces	Watts
Installed Lighting (from Conditioned LTG-1C Page 2)	2500	**Installed** Lighting (from Unconditioned LTG-1C Page 2)	
Lighting Control Credit Conditioned Spaces (from LTG-2C)	-	Lighting Control Credit Unconditioned Spaces (from LTG-2C)	-
Adjusted **Installed** Lighting Power	= 2500	Adjusted **Installed** Lighting Power	=
Complies if **Installed** ≤ **Allowed**	↕	Complies if **Installed** ≤ **Allowed**	↕
Allowed Lighting Power Conditioned Spaces (from LTG-3C)	2696.6	**Allowed** Lighting Power Unconditioned Spaces (from LTG-3C)	

Required Acceptance Tests

Designer:

*This form is to be used by the designer and attached to the plans. Listed below is the acceptance test for the Lighting system, **LTG-2A and LTG-3A**. The designer is required to check the acceptance tests and list all control devices serving the building or space shall be certified as meeting the Acceptance Requirements for Code Compliance. If all the lighting system or control of a certain type requires a test, list the different lighting and the number of systems. The NA7 Section in the Appendix of the Nonresidential Reference Appendices Manual describes the test. Since this form will be part of the plans, completion of this section will allow the responsible party to budget for the scope of work appropriately. **Forms can be grouped by type of Luminaire controlled.***

Enforcement Agency:

***Systems Acceptance**. Before Occupancy Permit is granted for a newly constructed building or space or when ever new lighting system with controls is installed in the building or space shall be certified as meeting the Acceptance Requirements.*
*The **LTG-2A and LTG-3A** forms are not considered a complete form and are not to be accepted by the enforcement agency unless the boxes are checked and/or filled and signed. In addition, a Certificate of Acceptance forms shall be submitted to the enforcement agency that certifies plans, specifications, installation certificates, and operating and maintenance information meet the requirements of §10-103(b) of Title 24 Part 6. The field inspector must receive the properly filled out and signed forms before the building can receive final occupancy. A copy of the **LTG-2A and LTG-3A for** each different lighting luminaire control(s) must be provided to the owner of the building for their records.*

Luminaires Controlled				LTG-2A and 3A
Equipment Requiring Testing	Description	Number of like Controls	Location	Controls and Sensors and Automatic Daylighting Controls Acceptance
				☐

STATE OF CALIFORNIA
INDOOR LIGHTING POWER ALLOWANCE
CEC-LTG-3C (Revised 08/09) CALIFORNIA ENERGY COMMISSION

INDOOR LIGHTING POWER ALLOWANCE LTG-3C

Project Name: McMASTER PARK IMPROVEMENTS - COMMUNITY CENTER — Date: 08-06-2013

ALLOWED LIGHTING POWER (Chose One Method)
A Separate LTG-3C must be filled out for Conditioned and Unconditioned Spaces. Indoor Lighting Power Allowances listed on this page are only for: ☑ CONDITIONED spaces ☐ UNCONDITIONED spaces

COMPLETE BUILDING METHOD

BUILDING CATEGORY (From §146 Table 146-E)	WATTS PER (ft²)	X	COMPLETE BLDG. AREA	=	ALLOWED WATTS
	TOTALS		AREA		WATTS

AREA CATEGORY METHOD – Part A

A	B		C		D
AREA CATEGORY (From §146 Table 146-F)	WATTS PER (ft²)	X	AREA (ft²)	=	ALLOWED WATTS
OFFICES	0.9		362		325.8
MULTIPORPOSE ROOM, MEETING ROOM	1.4		843		1,180.2
LOBBIES/MAIN ENTRY	1.5		252		378.0
RESTROOMS, HALLWAYS, & STORAGE ROOM	0.6		608		364.8
UTILITY ROOM	0.7		48		33.6
KITCHEN, FOOD PREPARATION	1.6		217		347.2
					0.0
Sum of Additional Allowed Watts from Area Category Method – Part B (from table below)					
TOTALS			2,330		2,629.6
			AREA		WATTS

AREA CATEGORY METHOD – Part B Additional Wattage Allowance (from Table 146-F Footnotes)

A	B	C [1]	D	E	F	G
Primary Function	Sq Ft	Additional Watts Per ft² [2] Allowed	Wattage Allowance (B x C)	Description(s) and Quantity of Special Luminaire [2] Types in each Primary Function Area	Total Design Watts	ALLOWED WATTS Smaller of D or F
TOTALS – Enter into Area Category Method – Part A (table above)						

[1] Additional watts available only when allowed according to the footnotes on bottom of Table 146-F for chandelier or sconce; art, craft, assembly or manufacturing specialized task work; precision commercial/ industrial work; or lab specialized task work.
[2] Special luminaires are light fixtures described in the Table 146-F Footnotes that are subject to an additional wattage allowance.

TAILORED METHOD
Total Allowed Watts using the Tailored Method taken from LTG-4C (Page 1 of 4) Row 3
The indoor lighting power allowance using the Tailored Method of compliance shall be determined using the LTG-4C set of forms. A separate set of LTG-4C forms shall be filled out for CONDITIONED and UNCONDITIONED spaces

INDOOR LIGHTING MANDATORY MEASURES:

☑ DETERMINING INSTALLED LIGHTING POWER

INSTALLED LIGHTING POWER HAS BEEN DETERMINED IN ACCORDANCE WITH SECTION 146(C)2.

☑ AREA CONTROL

INDEPENDENT LIGHTING CONTROLS FOR EACH AREA ENCLOSED BY CEILING HEIGHT PARTITIONS IN ACCORDANCE WITH SECTION 131(a) CONSIST ONE OF THE FOLLOWING: STANDARD OCCUPANCY SENSOR, MULTI–LEVEL OCCUPANCY SENSOR, TIMER SWITCH, & MANUAL SWITCH AS SHOWN IN SHEET E–3.

☑ MULTI-LEVEL LIGHTING CONTROLS

ALL ENCLOSED SPACE LARGER THAN 100 SQ. FT. AND EXCEED LARGER THAN 0.8 WATTS PER SQUARE FT. SHALL HAVE AT LEAST ONE CONTROL STEP TO REDUCE LIGHTING POWER BETWEEN 30% TO 50% PER SECTION 131(b). BY PROVIDING SMALL OFFICES AND OTHER AREA SHOWN IN SHEET E–3 OF MULTI–LEVEL OCCUPANCY SENSOR AND STANDARD OCCUANCY SENSOR IN CONJUNCTION WITH MANUAL OPERATED OVERRIDE SWITCH.

☑ SHUTT-OFF CONTROLS / AUTOMATIC CONTROL DEVICE

OFFICES 250 SQ. FT. OR SMALLER SHALL BE EQUIPED WITH OCCUPANT SENSOR(S) TO SHUT OFF THE LIGHTING. IN ADDITION, CONTROLS SHALL BE PROVIDED THAT ALLOW THE LIGHT TO MANUALLY SHUT–OFF REGARDLES OF SENSOR STATUS PER SECTION 131(d)4.

☑ CONTROL CREDITS

MULTI–LEVEL OCCUPANT SENSOR WITH MULTI–LEVEL CIRCUITRY AND SWITCHING IN ACCORDANCE WITH SECTION 146(a)2D USE IN ANY SPACE ≤ 250 SQ. FT. ENCLOSED BY CEILING PARTITIONS QUALIFIES FOR POWER ADJUSTMENT FACTOR.

☑ FLUORESCENT BALLAST AND LUMINAIRES CERTIFIED

ALL FLUORESCENT FIXTURES SUBJECT CERTIFICATION AND SPECIFIED FOR THE PROJECT ARE CERTIFIED.

☑ EMERGENCY EGRESS FIXTURE

EMERGENCY EGRESS THAT EXCEED THE MAXIMUM OF 0.3 WATTS/SQ. FT. SHALL NOT BE EXEMPT FROM SWITCHING REQUIREMENTS IN ACCORDANCE WITH SECTION 131(a) EXCEPTION No. 1.

EMERGENCY FIXTURE THAT IS NOT NORMALLY OFF IS NOT EXEMPTED FROM LIGHTING POWER CALCULATIONS IN ACCORDANCE WITH CHAPTER 5 INDOOR LIGHTING 5.2.3.3 EXIT WAY AND EGRESS LIGHTING.

☑ ALL LIGHTING CONTROL SHALL MEET THE REQUIREMENTS AND CERTIFICATION FROM CALIFORNIA ENERGY COMMISION.

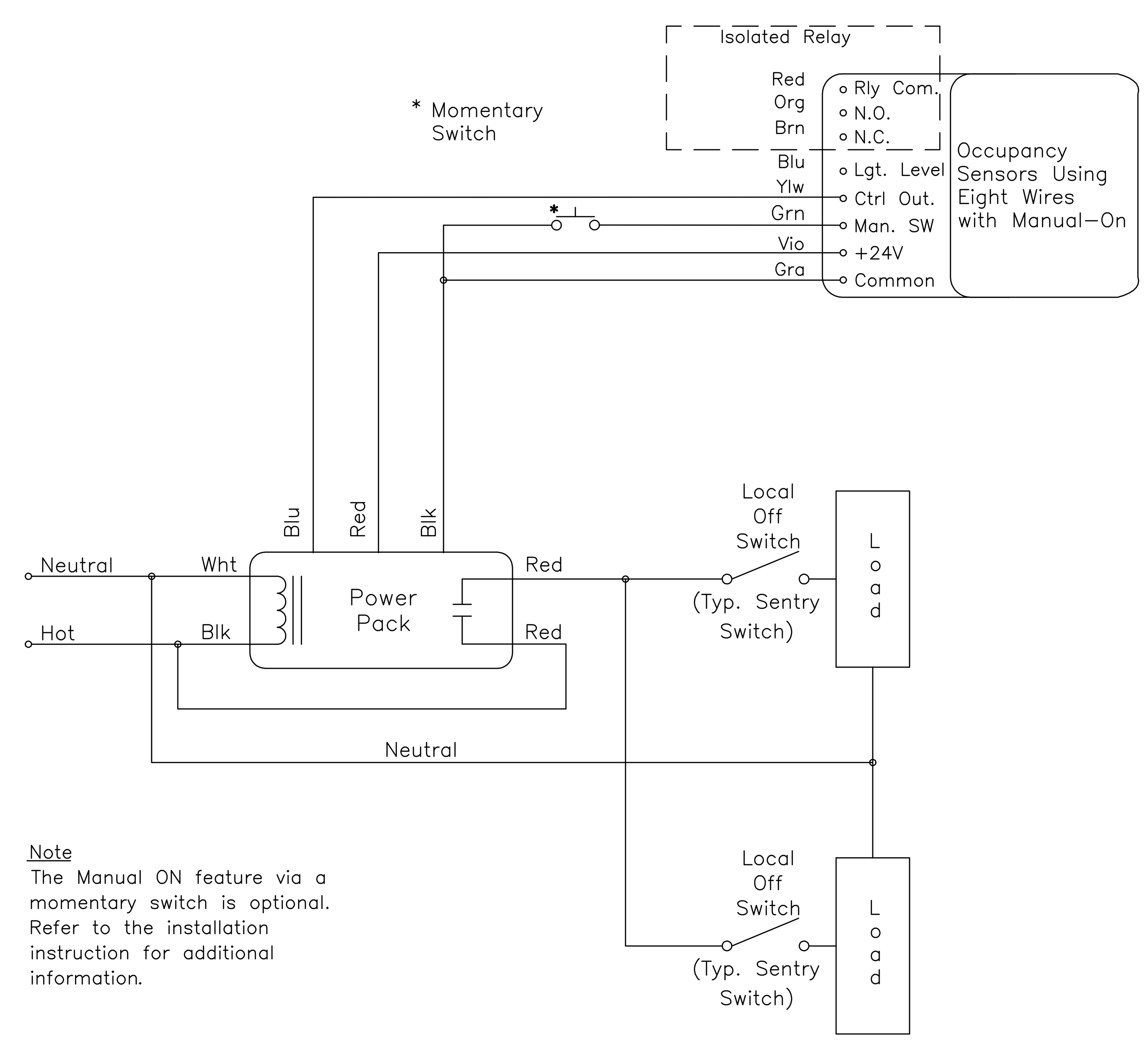

Note
The Manual ON feature via a momentary switch is optional. Refer to the installation instruction for additional information.

360 DEGREE OCCUPANCY WIRING DIAGRAM

SC CONSULTING GROUP
24881 ALICIA PARKWAY #317
LAGUNA HILLS, CA 92653
949.280.4782
ed@sccg–inc.com
ARCHITECT * ENGINEER

REGISTERED PROFESSIONAL ENGINEER — OPTY K. FERNANDEZ — No. E-012496 — EXP. 9/30/15 — ELECTRICAL — STATE OF CALIFORNIA

LINKTURE CONSULTING ENGINEERS
15 FLAGSTONE
TRABUCO CANYON, CA 92679
(949) 589-1909 PHONE
(909) 999-1188 FAX
email@linkture.com
www.linkture.com

MCMASTER PARK IMPROVEMENTS
3624 W. ARTESIA BOULEVARD, TORRANCE, CALIF

Sheet Title

COMMUNITY CENTER TITLE 24 INDOOR COMPLIANCE FORMS

REVISIONS		
No.	Description	Date
A	~~Health Dept Review Set~~	~~11-01-13~~
1	GENERAL REVISIONS	09-03-14

Drawn	ecc
Project #	13-6018
Plot Date	07-25-14

Scale:

THIS DOCUMENT, WHICH INCORPORATES THE DESIGN CONCEPTS, DRAWINGS, SPECIFICATIONS AND WRITTEN MATERIAL CONTAINED HEREIN, AS AN INSTRUMENT OF SERVICE, IS THE PROPERTY OF LINKTURE CORP AND CANNOT BE COPIED OR USED IN WHOLE OR IN PART FOR ANY OTHERS BUT ITS ORIGINAL PURPOSE, WITHOUT THE WRITTEN AUTHORIZATION OF LINKTURE CORP. ©

E-4.0

Sheet Number of

STATE OF CALIFORNIA
CERTIFICATE OF COMPLIANCE AND FIELD INSPECTION CHECKLIST
CEC-OLTG-1C (Revised 07/10) — CALIFORNIA ENERGY COMMISSION

Certificate of Compliance (Page 1 of 4) OLTG-1C

Project Name: McMASTER PARK IMPROVEMENTS - COMMUNITY CENTER — Date: 08-06-2012

Project Address: 3624 WEST ARTESIA BOULEVARD TORRANCE, CA. 50503 — Total Hardscape Illuminated Area: 1549

General Information

Phase of Construction: ☑ New Construction ☐ Addition ☐ Alteration

Documentation Author's Declaration Statement

- I certify that this Certificate of Compliance documentation is accurate and complete.

Name: OPTY FERNANDEZ — Signature:
Company: LINKTURE CORPORATION — Date: 03-07-2012
Address: 15 FLAGSTONE — IF Applicable CEA # CEPE #
City/State/Zip: TRABUCO CANYON, CA. 92679 — Phone: (949) 589 -1909

Principal Lighting Designer's Declaration Statement

- I am eligible under Division 3 of the California Business and Professions Code to accept responsibility for the lighting design.
- This Certificate of Compliance identifies the lighting features and performance specifications required for compliance with Title 24, Pages 1 and 6 of the California Code of Regulations.
- The design features represented on this Certificate of Compliance are consistent with the information provided to document this design on the other applicable compliance forms, worksheets, calculations, plans and specifications submitted to the enforcement agency for approval with this building permit application.

Name: OPTY FERNANDEZ — Signature:
Company: LINKTURE CORPORATION — Phone: 03-07-2012
Address: 15 FLAGSTONE — License #
City/State/Zip: TRABUCO CANYON, CA. 92679 — Date: (949) 589 -1909

Principal Lighting Designer's Declaration

☐ I certify that this Certificate of Compliance documentation is accurate and complete, and accounts for all outdoor lighting power, including building mounted, pole mounted, as well as all other outdoor lighting designed for the site, and that Additional Lighting Power Allowances for Specific Applications or Additional Lighting Power Allowances for Ordinance Requirements have not been counted more than one time for the same area, in accordance with Section 147 of the Standards.

Outdoor Lighting Mandatory Measures
Indicate location on building plans of Mandatory Measures Note Block: ________________________

LIGHTING COMPLIANCE FORMS & WORKSHEETS (check box if worksheet is included)

For detailed instructions on the use of this and all Energy Efficiency Standards compliance forms, please refer to the Nonresidential Manual published by the California Energy Commission.

- ☑ OLTG-1C Certificate of Compliance. All 4 pages required on plans for all submittals.
- ☑ OLTG-2C (Page 1 of 3) Lighting Wattage Allowances for General Hardscape, Sales Frontage, or Ornamental Lighting. Optional on plans.
- ☑ OLTG-2C (Page 2 of 3) Lighting Wattage Allowances for Per Application or Per Area. Optional on plans.
- ☐ OLTG-2C (Page 3 of 3) Additional Lighting Power Allowance for Ordinance Requirements. Optional on plans.

STATE OF CALIFORNIA
CERTIFICATE OF COMPLIANCE AND FIELD INSPECTION CHECKLIST
CEC-OLTG-1C (Revised 07/10) — CALIFORNIA ENERGY COMMISSION

Certificate of Compliance (Page 2 of 4) OLTG-1C

Project Name: McMASTER PARK IMPROVEMENTS - COMMUNITY CENTER — Date: 08-06-2013

COMPLIANCE FIXTURE / LIGHTING CONTROL SCHEDULE and FIELD INSPECTION CHECKLIST

INSTALLATION CERTIFICATE, OLTG-1-INST (Retain a copy and verify form is completed and signed.) — Field Inspection ☐

CERTIFICATE OF ACCEPTANCE, OLTG-2A (Retain a copy and verify form is completed and signed.) — Field Inspection ☐

A Name Or Item Tag	B Luminaire Description [1] See footnote below (i.e.: 1 lamp pole-top shoe-box 400 watt metal halide)	C Cutoff Designation	D Watts per Luminaire	E Special Features	F How wattage was determined: Default from NA-8	F: According to §130	G Number of Luminaires	H Installed Watts (D x G)	I Field Inspector[2] Pass	Fail
E	1 LAMP, CFTR26W/GX24Q-3, WALLPACK		28	☐	☑	☐	11	308	☐	☐
F	1 LAMP, CFT9W/2G7, SURFACE MOUNT CANOPY		10	☐	☑	☐	8	80	☐	☐

Enter total into OLTG-1C; Page 4 of 4; Row H; Total Installed Watts: 388

1. Type of luminaire (i.e.: post top, wall pack, surface, shoe box); for non-incandescent luminaires, indicate nominal lamp wattage and lamp type (i.e.: fluorescent, incandescent, HID); ballast type (i.e.: electronic or magnetic); number of lamps and number of ballasts per luminaire. For incandescent luminaires, the luminaire wattage listed in column D shall be the maximum relamping rated wattage on a permanent factory-installed label on the luminaire, NOT the wattage of the lamp (bulb) used, in accordance with Section 130(d or e).
2. If Fail then describe on Page 2 of the Inspection Checklist Form and take appropriate action to correct. Verify building plans if necessary.

EXEMPT LUMINAIRES — Field Inspection ☐

Name or Symbol	Description of exempt luminaires in accordance with §147

MANDATORY CONTROLS — Field Inspection ☐

#	Description	Location	#	Description	Location

SPECIAL FEATURES INSPECTION CHECKLIST (See Page 2 of 4 of OLTG-1C)

The local enforcement agency should pay special attention to the items specified in this checklist. These items require special written justification and documentation, and special verification. The local enforcement agency determines the adequacy of the justification, and may reject a building or design that otherwise complies based on the adequacy of the special justification and documentation submitted.

STATE OF CALIFORNIA
CERTIFICATE OF COMPLIANCE AND FIELD INSPECTION CHECKLIST
CEC-OLTG-1C (Revised 07/10) — CALIFORNIA ENERGY COMMISSION

Certificate of Compliance (Page 3 of 4) OLTG-1C

Project Name: McMASTER PARK IMPROVEMENTS - COMMUNITY CENTER — Date: 08-06-2013

Field Inspector Notes or Discrepancies:

A. OUTDOOR LIGHTING ZONE

OUTDOOR LIGHTING ZONE: ☑ OLZ 1 ☐ OLZ 2 ☐ OLZ 3 ☐ OLZ 4

Is the Outdoor Lighting Zone: ☑ Default in accordance with §10-114, or ☐ Amended by JHA

Complete the information below if the default Outdoor Lighting Zone has been amended by the local jurisdiction having authority (JHA):

- ☐ The site is a government designated park, recreation area, wildlife preserve, or portion thereof, and has been designated as LZ2 or LZ3, in accordance with Table 10-114-A, because the site is contained within such a zone.
- ☐ The local jurisdiction having authority has officially adopted a change to the State Default Lighting Zone and has notified the Energy Commission by providing the materials required in §10-114(d) to the Executive Director.
- ☐ The adopted change is posted on the Energy Commission website.

B. ADDITIONAL LIGHTING POWER ALLOWANCE FOR ORDINANCE REQUIREMENTS

Are additional lighting power allowances for ordinance in Table 147-C used? ☐ Yes ☐ No

Complete the information below if additional lighting power allowances for ordinance requirements are used:

- ☐ The local jurisdiction having authority has officially adopted specific outdoor light levels, which are expressed as average or minimum footcandle levels, by following a public process that allowed for formal public notification, review, and comment about the proposed change.
- ☐ The local jurisdiction having authority which adopted specific outdoor light levels and has notified the Commission by providing the following materials required §10-114(f) to the Executive Director.

C. ACCEPTANCE FORMS

Required Acceptance Tests

Designer:

*This form is to be used by the designer and attached to the plans. Listed below is the acceptance test for the Lighting system, **OLTG-2A**. The designer is required to check the acceptance tests and list all control devices serving the building or space shall be certified as meeting the Acceptance Requirements for Code Compliance. If all the lighting system or control of a certain type requires a test, list the different lighting and the number of systems. The NA7 Section in the Appendix of the Nonresidential Reference Appendices Manual describes the test. Since this form will be part of the plans, completion of this section will allow the responsible party to budget for the scope of work appropriately. **Forms can be grouped by type of Luminaire controlled.***

Enforcement Agency:

***Systems Acceptance.** Before Occupancy Permit is granted for a newly constructed building or space or when ever new lighting system with controls is installed in the building or space shall be certified as meeting the Acceptance Requirements.*
*The **OLTG-2A** form is not considered a complete form and is not to be accepted by the enforcement agency unless the boxes are checked and/or filled and signed. In addition, a Certificate of Acceptance forms shall be submitted to the enforcement agency that certifies plans, specifications, installation certificates, and operating and maintenance information meet the requirements of §10-103(b) of Title 24 Part 6. The field inspector must receive the properly filled out and signed forms before the building can receive final occupancy. A copy of the **OLTG-2A** for each different lighting luminaire control(s) must be provided to the owner of the building for their records.*

	Luminaires Controlled			Certificate of Acceptance OLTG-2A[1]
Equipment Requiring Testing	Description	Number of Like Controls	Location	Outdoor Lighting Acceptance Tests

STATE OF CALIFORNIA
CERTIFICATE OF COMPLIANCE AND FIELD INSPECTION CHECKLIST
CEC-OLTG-1C (Revised 07/10) — CALIFORNIA ENERGY COMMISSION

Certificate of Compliance (Page 4 of 4) OLTG-1C

Project Name: McMASTER PARK IMPROVEMENTS - COMMUNITY CENTER — Date: 08-06-2013

*1. Insert: **OMS** for Outdoor Motion Sensor; **OLSC** for Outdoor Lighting Shutoff Controls; **OP** for Outdoor Photocontrol; **ATS** for Astronomical Time Switch; and, **STS** for Standard (non-astronomical) Time Switch acceptance.*

ALLOWED AND INSTALLED OUTDOOR LIGHTING POWER

		Lighting Wattage Power Allowance
A	Lighting power allowance for general hardscape (from OLTG-2C Page 1 of 3)	610.68
B	Specific application lighting wattage allowance per unit length (from OLTG-2C Page 1 of 3)	
C	Specific application wattage allowance for ornamental lighting (from OLTG-2C Page 1 of 3)	
D	Specific application wattage allowance per application (from OLTG-2C Page 2 of 3)	196
E	Specific application lighting wattage allowance per area (from OLTG-2C Page 2 of 3)	
F	Additional lighting power allowance for ordinance requirements (from OLTG-2C Page 3 of 3)	
G	Total Allowed Wattage = Sum of rows A through F:	806
H	Total Installed Watts (from Luminaire Schedule, (from OLTG-1C (Page 2 of 4)	388

Provided that the lighting wattage power allowances listed in rows A through F are identical to the lighting wattage power allowances taken from OLTG-2C Pages 1 through 3, complies if Installed Wattage in row H is less than or equal to the Total Installed Wattage in row G — ☑ Yes ☐ No

STATE OF CALIFORNIA
OUTDOOR LIGHTING WORKSHEET
CEC-OLTG-2C (Revised 03/10) — CALIFORNIA ENERGY COMMISSION

OUTDOOR LIGHTING WORKSHEET (Page 1 of 3) OLTG-2C

Project Name: McMASTER PARK IMPROVEMENTS - COMMUNITY CENTER — Date: 08-06-2013

A. LIGHTING POWER ALLOWANCE FOR GENERAL HARDSCAPE

AREA WATTAGE ALLOWANCE (AWA)			LINEAR WATTAGE ALLOWANCE (LWA)			INITIAL WATTAGE ALLOWANCE	TOTAL GENERAL HARDSCAPE LIGHTING ALLOWANCE
A	B	C	D	E	F	G	H
ILLUMINATED HARDSCAPE AREA	AWA PER SQUARE FOOT	AWA (A X B)	PERIMETER LENGTH OF GENERAL HARDSCAPE	LWA PER LINEAR FOOT	LWA (D X E)	IWA (WATTS)	C + F + G
1549	.036	55.764	597	.36	214.92	340	610.684

Enter total into OLTG-1C; Page 4 of 4; Row A; Lighting Power Allowance for General Hardscape: 610.684

☐ Yes: AWA, LWA, and IWA from Table 147-A was used as appropriate for the Outdoor Lighting Zone

B. SPECIFIC APPLICATION LIGHTING WATTAGE ALLOWANCE PER UNIT LENGTH (Available only for sales frontage)

DETERMINE WATTAGE ALLOWANCE				LUMINAIRE TYPE		DESIGN WATTS			
A	B	C	D	E	F	G	H	I	J
Specific Lighting Application	Linear Feet of Frontage	Sales Frontage allowance for OLZ (watts per lf)	Wattage Allowance (B x C)	Name or Symbol	Luminaire Type	Luminaire Quantity	Watts per Luminaire	Design Watts (G x H)	Allowed Watts Minimum of D or I

Enter total into OLTG-1C; Page 4 of 4; Row B; Specific Application Lighting Wattage Allowance Per Unit Length

C. SPECIFIC APPLICATION WATTAGE ALLOWANCE FOR ORNAMENTAL LIGHTING

DETERMINE WATTAGE ALLOWANCE				LUMINAIRE TYPE		DESIGN WATTS			
A	B	C	D	E	F	G	H	I	J
Specific Lighting Application	Square feet of Hardscape	Ornamental Lighting Allowance for OLZ (watts per ft²)	Wattage Allowance (B x C)	Name or Symbol	Luminaire Type	Luminaire Quantity	Watts per Luminaire	Design Watts (G x H)	Allowed Watts Minimum of D or I

Enter total into OLTG-1C; Page 4 of 4; Row C: Specific Application Wattage Allowance for Ornamental Lighting

STATE OF CALIFORNIA
OUTDOOR LIGHTING WORKSHEET
CEC-OLTG-2C (Revised 03/10) — CALIFORNIA ENERGY COMMISSION

OUTDOOR LIGHTING WORKSHEET (Page 2 of 3) OLTG-2C

Project Name: McMASTER PARK IMPROVEMENTS - COMMUNITY CENTER — Date: 08-06-2013

D. SPECIFIC APPLICATION LIGHTING WATTAGE ALLOWANCE PER APPLICATION

DETERMINE WATTAGE ALLOWANCE				DESIGN WATTS					ALLOWANCE
A	B	C	D	E	F	G	H	I	J
Specific Lighting Application	Number of Applications	Specific Application Allowance (watts)	Wattage Allowance (B x C)	Luminaire Symbol	Luminaire Type	Luminaire Quantity	Watts per Luminaire	Design Watts (G x H)	Allowed Watts Minimum of D or I
ENTRANCES OR EXITS	6	30	180	WP	WALLPACK, CFTR26W/GX24Q-3	7	28	196	196

Enter total into OLTG-1C; Page 4 of 4; Row D; Specific Application Wattage Allowance Per Application: 196

E. SPECIFIC APPLICATION LIGHTING WATTAGE ALLOWANCE PER AREA

DETERMINE WATTAGE ALLOWANCE				LUMINAIRE TYPE		DESIGN WATTS			
A	B	C	D	E	F	G	H	I	J
Specific Lighting Application	Illuminated Area of Application	Specific Application Allowance (watts per ft²)	Wattage Allowance (B x C)	Code for Luminaire Type	Luminaire Type	Luminaire Quantity	Watts per Luminaire	Design Watts (G x H)	Allowed Watts Minimum of D or I

Enter total into OLTG-1C; Page 4 of 4; Row E; Specific Application Lighting Wattage Allowance Per Area

OUTDOOR LIGHTING MANDATORY MEASURES:

☑ DETERMINING INSTALLED LIGHTING POWER

INSTALLED LIGHTING POWER HAS BEEN DETERMINED IN ACCORDANCE WITH GENERAL HARDSCAPE LIGHTING POWER ALLOWANCE SECTION 147(d)1., STANDARD TABLE 147–A

☑ CONTROL TO TURN OFF THE LIGHTS DURING THE DAY

ALL PERMANENTLY INSTALLED OUTDOOR LIGHTING MUST BE CONTROLLED BY A PHOTOELECTRIC SWITCH OR ASTRONOMICAL TIME SWITCH THAT AUTOMATICALLY TURNS OFF THE OUTDOOR LIGHTING WHEN DAYLIGHT IS AVAILABLE (SECTION 132(C)1).

☑ OUTDOOR LUMINAIRE CUTOFF - N/A

OUTDOOR LUMINAIRES THAT USE LAMPS RATED GREATER THAN 175W (SECTION 132(b)) IN THE HARDSACPE AREAS, PARKING LOT, BUILDING ENTRANCES, CANOPIES AND ALL OUTDOOR SALES AREAS WILL BE REQUIRED TO BE DESIGNATED CUTOFF IN A PHOTMETRIC TEST REPORT THAT INCLUDES TILT OR OTHER NON–LEVEL MOUNTING CONDITIONS.

☑ ALL LIGHTING CONTROL SHALL MEET THE REQUIREMENTS AND CERTIFICATION FROM CALIFORNIA ENERGY COMMISION.

SC CONSULTING GROUP
24881 ALICIA PARKWAY #317
LAGUNA HILLS, CA 92653
949.280.4782
ed@sccg–inc.com
ARCHITECT • ENGINEER

REGISTERED PROFESSIONAL ENGINEER — OPTY K. FERNANDEZ — No. E-012496 — EXP. 9/30/15 — ELECTRICAL — STATE OF CALIFORNIA

LINKTURE CONSULTING ENGINEERS
15 FLAGSTONE
TRABUCO CANYON, CA 92679
(949) 589-1909 PHONE
(909) 999-1188 FAX
email@linkture.com
www.linkture.com

MCMASTER PARK IMPROVEMENTS
3624 W. ARTESIA BOULEVARD, TORRANCE, CALIF

Sheet Title
COMMUNITY CENTER TITLE 24 OUTDOOR COMPLIANCE FORMS

REVISIONS

No.	Description	Date
A	~~Health Dept Review Set~~	~~11-01-13~~
1	GENERAL REVISIONS	09-03-14

Drawn	ecc
Project #	13-6018
Plot Date	07-25-14

Scale:

THIS DOCUMENT, WHICH INCORPORATES THE DESIGN CONCEPTS, DRAWINGS, SPECIFICATIONS AND WRITTEN MATERIAL CONTAINED HEREIN, AS AN INSTRUMENT OF SERVICE, IS THE PROPERTY OF LINKTURE CORP AND CANNOT BE COPIED OR USED IN WHOLE OR IN PART FOR ANY OTHERS BUT ITS ORIGINAL PURPOSE, WITHOUT THE WRITTEN AUTHORIZATION OF LINKTURE CORP.©

E-4.1

Sheet Number of

STATE OF CALIFORNIA
CERTIFICATE OF COMPLIANCE AND FIELD INSPECTION CHECKLIST
CEC-LTG-1C (Revised 08/09) CALIFORNIA ENERGY COMMISSION

CERTIFICATE OF COMPLIANCE (Page 1 of 4) LTG-1C

Project Name: McMASTER PARK IMPROVEMENTS - RECREATIONAL CENTER		Date: 08-06-2013
Project Address: 3624 WEST ARTESIA BOULEVARD TORRANCE, CA. 50503	Climate Zone: 6	Building CFA : 606 SQ. FT. / Unconditioned Floor Area :

General Information

Building Type:	☑ Nonresidential	☐ High-Rise Residential	☐ Hotel/Motel
☐ Schools	☐ Relocatable Public Schools	☐ Conditioned Spaces	☐ Unconditioned Spaces
Phase of Construction:	☑ New Construction	☐ Addition	☐ Alteration
Method of Compliance:	☐ Complete Building	☑ Area Category	☐ Tailored

Documentation Author's Declaration Statement
- I certify that this Certificate of Compliance documentation is accurate and complete.

Name: OPTY FERNANDEZ	Signature:
Company: LINKTURE CORPORATION	Date : 03-07-2012
Address: 15 FLAGSTONE	If applicable: CEA # CEPE #
City/State/Zip TRABUCO CANYON, CA. 92679	Phone: (949) 589 -1909

Principal Lighting Designer's Declaration Statement
- I am eligible under Division 3 of the California Business and Professions Code to accept responsibility for the lighting design.
- This Certificate of Compliance identifies the lighting features and performance specifications required for compliance with Title 24, Pages 1 and 6 of the California Code of Regulations.
- The design features represented on this Certificate of Compliance are consistent with the information provided to document this design on the other applicable compliance forms, worksheets, calculations, plans and specifications submitted to the enforcement agency for approval with this building permit application.

Name: OPTY FERNANDEZ	Signature:
Company: LINKTURE CORPORATION	Phone: (949) 589 -888
Address: 15 FLAGSTONE	License # E-012496
City/State/Zip: TRABUCO CANYON, CA. 92679	Date: 08-06-2013

Lighting Mandatory Measures
Indicate location on building plans of Mandatory Measures Note Block: ________________________

LIGHTING COMPLIANCE FORMS & WORKSHEETS (check box if worksheet is included)

For detailed instructions on the use of this and all Energy Efficiency Standards compliance forms, please refer to the Nonresidential Manual published by the California Energy Commission.

☑ LTG-1C Pages 1 through 4	Certificate of Compliance. All Pages required on plans for all submittals.
☐ LTG-2C	Lighting Controls Credit Worksheet
☑ LTG-3C	Indoor Lighting Power Allowance
☐ LTG-4C Pages 1 through 4	Tailored Method Worksheet
☐ LTG-5C Pages 1 and 2	Line Voltage Track Lighting Worksheet

STATE OF CALIFORNIA
CERTIFICATE OF COMPLIANCE AND FIELD INSPECTION CHECKLIST
CEC-LTG-1C (Revised 08/09) CALIFORNIA ENERGY COMMISSION

CERTIFICATE OF COMPLIANCE (Page 2 of 4) LTG-1C
INDOOR LIGHTING SCHEDULE and FIELD INSPECTION ENERGY CHECKLIST

Project Name: McMASTER PARK IMPROVEMENTS - RECREATIONAL CENTER Date: 08-06-2013

Installation Certificate, LTG-1-INST (Retain a copy and verify form is completed and signed.) ☐ Field Inspector

Certificates of Acceptance, LTG-2A and LTG-3A (Retain a copy and verify form is completed and signed.) ☐ Field Inspector

A separate Lighting Schedule Must Be Filled Out for Conditioned and Unconditioned Spaces Installed Lighting Power listed on this Lighting Schedule is only for: ☑ **CONDITIONED SPACE** ☐ **UNCONDITIONED SPACE**

☑ *The actual indoor lighting power listed below includes all installed permanent and portable lighting systems in accordance with §146(a)*

☐ *Only for offices: Up to the first 0.2 watts per square foot of portable lighting shall not be required to be included in the calculation of actual indoor lighting power density in accordance with the Exception to §146(a). All portable lighting in excess of 0.2 watts per square foot is totaled below.*

Luminaire Schedule (Type, Lamps, Ballasts)			Installed Watts						
A	B	C	D	E		F	G	H	
Name or Item Tag	Complete Luminaire Description (i.e, 3 lamp fluorescent troffer, F32T8, one dimmable electronic ballast)		Watts per Luminaire	How wattage was determined: CEC Default from NA8	According to §130 (d or e)	Number of Luminaires	Installed Watts (D x F)	Field Inspector[2]: Pass	Fail
A	1 CFL, CFTR26W/GWX24Q-3 ELECTRONIC BALLAST		28	☑	☐	1	28	☐	☐
C	2 LAMP SURFACE MT., F32T8, INSTANT START BALLAST		54	☑	☐	11	594	☐	☐
H	1 LAMP SURFACE MT., F32T8, INSTANT START BALLAST		29	☑	☐	2	58	☐	☐
				☐	☐		0	☐	☐
				☐	☐		0	☐	☐
						INSTALLED WATTS PAGE TOTAL:	680		

Building total number of pages	1	Installed Watts Building Total (Sum of all pages)	680
		Enter into LTG-1C Page 4 of 4	

1. Wattage shall be determined according to Section 130(d and e). Wattage shall be rating of light fixture, not rating of bulb.
2. If Fail then describe on Page 2 of the Inspection Checklist Form and take appropriate action to correct. Verify building plans if necessary.

STATE OF CALIFORNIA
CERTIFICATE OF COMPLIANCE AND FIELD INSPECTION CHECKLIST
CEC-LTG-1C (Revised 08/09) CALIFORNIA ENERGY COMMISSION

CERTIFICATE OF COMPLIANCE (Page 3 of 4) LTG-1C

Project Name: McMASTER PARK IMPROVEMENTS - RECREATIONAL CENTER Date: 08-06-2013

INDOOR LIGHTING SCHEDULE and FIELD INSPECTION ENERGY CHECKLIST

Fill in controls for all spaces: a) area controls, b) multi-level controls, c) manual daylighting controls for daylit areas > 250 ft², automatic daylighting controls for daylit areas > 2,500 ft², d) shut-off controls, e) display lighting controls, f) tailored lighting controls - general lighting controlled separately from display, ornamental and display case lighting and g) demand responsive automatic controls for retail stores > 50,000 ft², in accordance with Section 131.

MANDATORY LIGHTING CONTROLS - FIELD INSPECTION ENERGY CHECKLIST

Type / Description	Number of Units	Location in Building		Field Inspector: Pass	Fail
MANUAL SWITCH	2	KITCHEN		☐	☐
MOTION SENSOR	2	MENS & WOMENS RESTROOM		☐	☐
MOTION SENSOR	2	STAFF & CHILDREN RESTROOM		☐	☐

Field Inspector's Notes or Discrepancies:

STATE OF CALIFORNIA
CERTIFICATE OF COMPLIANCE AND FIELD INSPECTION CHECKLIST
CEC-LTG-1C (Revised 08/09) CALIFORNIA ENERGY COMMISSION

CERTIFICATE OF COMPLIANCE (Page 4 of 4) LTG-1C

Project Name: McMASTER PARK IMPROVEMENTS - RECREATIONAL CENTER Date: 08-06-2013

Conditioned and Unconditioned space Lighting must not be combined for compliance

Indoor Lighting Power for Conditioned Spaces		Watts	Indoor Lighting Power for Unconditioned Spaces		Watts
Installed Lighting (from Conditioned LTG-1C Page 2)		680	**Installed** Lighting (from Unconditioned LTG-1C Page 2)		
Lighting Control Credit Conditioned Spaces (from LTG-2C)	-		Lighting Control Credit Unconditioned Spaces (from LTG-2C)	-	
Adjusted **Installed** Lighting Power	=	680	Adjusted **Installed** Lighting Power	=	
Complies if **Installed** ≤ **Allowed** ↕			Complies if **Installed** ≤ **Allowed** ↕		
Allowed Lighting Power Conditioned Spaces (from LTG-3C)		723	**Allowed** Lighting Power Unconditioned Spaces (from LTG-3C)		

Required Acceptance Tests

Designer:
*This form is to be used by the designer and attached to the plans. Listed below is the acceptance test for the Lighting system, **LTG-2A and LTG-3A**. The designer is required to check the acceptance tests and list all control devices serving the building or space shall be certified as meeting the Acceptance Requirements for Code Compliance. If all the lighting system or control of a certain type requires a test, list the different lighting and the number of systems. The NA7 Section in the Appendix of the Nonresidential Reference Appendices Manual describes the test. Since this form will be part of the plans, completion of this section will allow the responsible party to budget for the scope of work appropriately. **Forms can be grouped by type of Luminaire controlled.***

Enforcement Agency:
***Systems Acceptance**. Before Occupancy Permit is granted for a newly constructed building or space or when ever new lighting system with controls is installed in the building or space shall be certified as meeting the Acceptance Requirements. The **LTG-2A and LTG-3A** forms are not considered a complete form and are not to be accepted by the enforcement agency unless the boxes are checked and/or filled and signed. In addition, a Certificate of Acceptance forms shall be submitted to the enforcement agency that certifies plans, specifications, installation certificates, and operating and maintenance information meet the requirements of §10-103(b) of Title 24 Part 6. The field inspector must receive the properly filled out and signed forms before the building can receive final occupancy. A copy of the **LTG-2A and LTG-3A for** each different lighting luminaire control(s) must be provided to the owner of the building for their records.*

Luminaires Controlled				LTG-2A and 3A
Equipment Requiring Testing	Description	Number of like Controls	Location	Controls and Sensors and Automatic Daylighting Controls Acceptance
				☐
				☐
				☐

STATE OF CALIFORNIA
INDOOR LIGHTING POWER ALLOWANCE
CEC-LTG-3C (Revised 08/09) CALIFORNIA ENERGY COMMISSION

INDOOR LIGHTING POWER ALLOWANCE LTG-3C

Project Name: McMASTER PARK IMPROVEMENTS - RECREATIONAL CENTER Date: 08-06-2013

ALLOWED LIGHTING POWER (Chose One Method)
A Separate LTG-3C must be filled out for Conditioned and Unconditioned Spaces. Indoor Lighting Power Allowances listed on this page are only for: ☑ CONDITIONED spaces ☐ UNCONDITIONED spaces

COMPLETE BUILDING METHOD

BUILDING CATEGORY (From §146 Table 146-E)	WATTS PER (ft²)	X	COMPLETE BLDG. AREA	=	ALLOWED WATTS
	TOTALS				
			AREA		WATTS

AREA CATEGORY METHOD – Part A

A	B		C		D
AREA CATEGORY (From §146 Table 146-F)	WATTS PER (ft²)	X	AREA (ft²)	=	ALLOWED WATTS
RESTROOMS, HALLWAYS, STORAGE ROOM	0.6		464		278.4
KITCHEN, FOOD PREPARATION	1.6		278		444.8
					0.0
					0.0
					0.0
					0.0
					0.0
Sum of Additional Allowed Watts from Area Category Method – Part B (from table below)					
	TOTALS		742		723.2
			AREA		WATTS

AREA CATEGORY METHOD – Part B Additional Wattage Allowance (from Table 146-F Footnotes)

A	B	C[1]	D	E	F	G
Primary Function	Sq Ft	Additional Watts Per ft² Allowed	Wattage Allowance (B x C)	Description(s) and Quantity of Special Luminaire[2] Types in each Primary Function Area	Total Design Watts	ALLOWED WATTS Smaller of D or F

TOTALS – Enter into Area Category Method – Part A (table above)

[1] Additional watts available only when allowed according to the footnotes on bottom of Table 146-F for chandelier or sconce; art, craft, assembly or manufacturing specialized task work; precision commercial/ industrial work; or lab specialized task work.
[2] Special luminaires are light fixtures described in the Table 146-F Footnotes that are subject to an additional wattage allowance.

TAILORED METHOD
Total Allowed Watts using the Tailored Method taken from LTG-4C (Page 1 of 4) Row 3

The indoor lighting power allowance using the Tailored Method of compliance shall be determined using the LTG-4C set of forms. A separate set of LTG-4C forms shall be filled out for CONDITIONED and UNCONDITIONED spaces

SC CONSULTING GROUP
24881 ALICIA PARKWAY #317
LAGUNA HILLS, CA 92653
949.280.4782
ed@sccg-inc.com
ARCHITECT * ENGINEER

REGISTERED PROFESSIONAL ENGINEER ... FERNANDEZ No. E-012496 EXP. 9/30/15 ELECTRICAL STATE OF CALIFORNIA

LINKTURE CONSULTING ENGINEERS
15 FLAGSTONE
TRABUCO CANYON, CA 92679
(949) 589-1909 PHONE
(909) 999-1188 FAX
email@linkture.com
www.linkture.com

MCMASTER PARK IMPROVEMENTS
3624 W. ARTESIA BOULEVARD,
TORRANCE, CALIF

Sheet Title
RECREATION CENTER TITLE 24 INDOOR COMPLIANCE FORMS

REVISIONS

No.	Description	Date
~~A~~	~~Health Dept Review Set~~	~~11-01-13~~
1	GENERAL REVISIONS	09-03-14

Drawn	ecc
Project #	13-6018
Plot Date	07-25-14

Scale:

THIS DOCUMENT, WHICH INCORPORATES THE DESIGN CONCEPTS, DRAWINGS, SPECIFICATIONS AND WRITTEN MATERIAL CONTAINED HEREIN, AS AN INSTRUMENT OF SERVICE, IS THE PROPERTY OF LINKTURE CORP AND CANNOT BE COPIED OR USED IN WHOLE OR IN PART FOR ANY OTHERS BUT ITS ORIGINAL PURPOSE, WITHOUT THE WRITTEN AUTHORIZATION OF LINKTURE CORP. ©

E-4.3

Sheet Number of

STATE OF CALIFORNIA
CERTIFICATE OF COMPLIANCE AND FIELD INSPECTION CHECKLIST
CEC-OLTG-1C (Revised 07/10) CALIFORNIA ENERGY COMMISSION

Certificate of Compliance (Page 1 of 4) OLTG-1C

Project Name: McMASTER PARK IMPROVEMENTS - RECREATIONAL CENTER | Date: 08-06-2012

Project Address: 3624 WEST ARTESIA BOULEVARD TORRANCE, CA. 50503 | Total Hardscape Illuminated Area: 1645

General Information

Phase of Construction: ☑ New Construction ☐ Addition ☐ Alteration

Documentation Author's Declaration Statement

- I certify that this Certificate of Compliance documentation is accurate and complete.

Name: OPTY FERNANDEZ | Signature:

Company: LINKTURE CORPORATION | Date: 03-07-2012

Address: 15 FLAGSTONE | If Applicable CEA # CEPE #

City/State/Zip: TRABUCO CANYON, CA. 92679 | Phone: (949) 589 -1909

Principal Lighting Designer's Declaration Statement

- I am eligible under Division 3 of the California Business and Professions Code to accept responsibility for the lighting design.
- This Certificate of Compliance identifies the lighting features and performance specifications required for compliance with Title 24, Pages 1 and 6 of the California Code of Regulations.
- The design features represented on this Certificate of Compliance are consistent with the information provided to document this design on the other applicable compliance forms, worksheets, calculations, plans and specifications submitted to the enforcement agency for approval with this building permit application.

Name: OPTY FERNANDEZ | Signature:

Company: LINKTURE CORPORATION | Phone: 03-07-2012

Address: 15 FLAGSTONE | License #

City/State/Zip: TRABUCO CANYON, CA. 92679 | Date: (949) 589 -1909

Principal Lighting Designer's Declaration

☐ I certify that this Certificate of Compliance documentation is accurate and complete, and accounts for all outdoor lighting power, including building mounted, pole mounted, as well as all other outdoor lighting designed for the site, and that Additional Lighting Power Allowances for Specific Applications or Additional Lighting Power Allowances for Ordinance Requirements have not been counted more than one time for the same area, in accordance with Section 147 of the Standards.

Outdoor Lighting Mandatory Measures
Indicate location on building plans of Mandatory Measures Note Block: _____

LIGHTING COMPLIANCE FORMS & WORKSHEETS (check box if worksheet is included)

For detailed instructions on the use of this and all Energy Efficiency Standards compliance forms, please refer to the Nonresidential Manual published by the California Energy Commission.

☑	OLTG-1C	Certificate of Compliance. All 4 pages required on plans for all submittals.
☑	OLTG-2C	(Page 1 of 3) Lighting Wattage Allowances for General Hardscape, Sales Frontage, or Ornamental Lighting. Optional on plans.
☑	OLTG-2C	(Page 2 of 3) Lighting Wattage Allowances for Per Application or Per Area. Optional on plans.
☐	OLTG-2C	(Page 3 of 3) Additional Lighting Power Allowance for Ordinance Requirements. Optional on plans.

STATE OF CALIFORNIA
CERTIFICATE OF COMPLIANCE AND FIELD INSPECTION CHECKLIST
CEC-OLTG-1C (Revised 07/10) CALIFORNIA ENERGY COMMISSION

Certificate of Compliance (Page 2 of 4) OLTG-1C

Project Name: McMASTER PARK IMPROVEMENTS - RECREATIONAL CENTER | Date: 08-06-2013

COMPLIANCE FIXTURE / LIGHTING CONTROL SCHEDULE and FIELD INSPECTION CHECKLIST

INSTALLATION CERTIFICATE, OLTG-1-INST (Retain a copy and verify form is completed and signed.) **Field Inspection** ☐

CERTIFICATE OF ACCEPTANCE, OLTG-2A (Retain a copy and verify form is completed and signed.) **Field Inspection** ☐

Luminaire Schedule			Installed Watts							
A	B	C	D	E	F	G	H	I		
Name Or Item Tag	Luminaire Description [1] See footnote below (i.e.: 1 lamp pole-top shoe-box 400 watt metal halide)	Cutoff Designation	Watts per Luminaire	Special Application	How wattage was determined: Default from NA.8	According to §130	Number of Luminaires	Installed Watts (D x G)	Field Inspector [2] Pass	Field Inspector [2] Fail
E	1 LAMP, CFTR26W/GX24Q-3, WALLPACK		28	☐	☑	☐	20	560	☐	☐
F	1 LAMP, CFT5W/2G7, SURFACE MOUNT		9	☐	☑	☐	2	18	☐	☐
				☐	☐	☐			☐	☐
				☐	☐	☐			☐	☐
				☐	☐	☐			☐	☐
				☐	☐	☐			☐	☐
				☐	☐	☐			☐	☐
Enter total into OLTG-1C; Page 4 of 4; Row H; Total Installed Watts:								578		

1. Type of luminaire (i.e.: post top, wall pack, surface, shoe box); for non-incandescent luminaires, indicate nominal lamp wattage and lamp type (i.e.: fluorescent, incandescent, HID); ballast type (i.e.: electronic or magnetic); number of lamps and number of ballasts per luminaire. For incandescent luminaires, the luminaire wattage listed in column D shall be the maximum relamping rated wattage on a permanent factory-installed label on the luminaire, NOT the wattage of the lamp (bulb) used, in accordance with Section 130(d) or e).
2. If Fail then describe on Page 2 of the Inspection Checklist Form and take appropriate action to correct. Verify building plans if necessary.

EXEMPT LUMINAIRES **Field Inspection** ☐

Name or Symbol	Description of exempt luminaires in accordance with §147

MANDATORY CONTROLS **Field Inspection** ☐

#	Description	Location	#	Description	Location

SPECIAL FEATURES INSPECTION CHECKLIST (See Page 2 of 4 of OLTG-1C)

The local enforcement agency should pay special attention to the items specified in this checklist. These items require special written justification and documentation, and special verification. The local enforcement agency determines the adequacy of the justification, and may reject a building or design that otherwise complies based on the adequacy of the special justification and documentation submitted.

STATE OF CALIFORNIA
CERTIFICATE OF COMPLIANCE AND FIELD INSPECTION CHECKLIST
CEC-OLTG-1C (Revised 07/10) CALIFORNIA ENERGY COMMISSION

Certificate of Compliance (Page 3 of 4) OLTG-1C

Project Name: McMASTER PARK IMPROVEMENTS - RECREATIONAL CENTER | Date: 08-06-2013

Field Inspector Notes or Discrepancies:

A. OUTDOOR LIGHTING ZONE

OUTDOOR LIGHTING ZONE: ☑ OLZ 1 ☐ OLZ 2 ☐ OLZ 3 ☐ OLZ 4

Is the Outdoor Lighting Zone ☑ Default in accordance with §10-114, or ☐ Amended by JHA

Complete the information below if the default Outdoor Lighting Zone has been amended by the local jurisdiction having authority (JHA):

- ☐ The site is a government designated park, recreation area, wildlife preserve, or portion thereof, and has been designated as LZ2 or LZ3, in accordance with Table 10-114-A, because the site is contained within such a zone.
- ☐ The local jurisdiction having authority has officially adopted a change to the State Default Lighting Zone and has notified the Energy Commission by providing the materials required in §10-114(d) to the Executive Director.
- ☐ The adopted change is posted on the Energy Commission website.

B. ADDITIONAL LIGHTING POWER ALLOWANCE FOR ORDINANCE REQUIREMENTS

Are additional lighting power allowances for ordinance in Table 147-C used? ☐ Yes ☐ No

Complete the information below if additional lighting power allowances for ordinance requirements are used:

- ☐ The local jurisdiction having authority has officially adopted specific outdoor light levels, which are expressed as average or minimum footcandle levels, by following a public process that allowed for formal public notification, review, and comment about the proposed change.
- ☐ The local jurisdiction having authority which adopted speecific outdoor light levels and has notified the Commission by providing the following materials required §10-114(f) to the Executive Director.

C. ACCEPTANCE FORMS

Required Acceptance Tests

Designer:

System Acceptance. *Before Occupancy Permit is granted for a newly constructed building or space or when ever new lighting system with controls is installed in the building or space shall be certified as meeting the Acceptance Requirements.*
The ***OLTG-2A*** *form is not considered a complete form and is not to be accepted by the enforcement agency unless the boxes are checked and/or filled and signed. In addition, a Certificate of Acceptance forms shall be submitted to the enforcement agency that certifies plans, specifications, installation certificates, and operating and maintenance information meet the requirements of §10-103(b) of Title 24 Part 6. The field inspector must receive the properly filled out and signed forms before the building can receive final occupancy. A copy of the* ***OLTG-2A*** *for each different lighting luminaire control(s) must be provided to the owner of the building for their records.*

Certificate of Acceptance

Luminaires Controlled				OLTG-2A [1]
Equipment Requiring Testing	Description	Number of Like Controls	Location	Outdoor Lighting Acceptance Tests

Enforcement Agency:

STATE OF CALIFORNIA
CERTIFICATE OF COMPLIANCE AND FIELD INSPECTION CHECKLIST
CEC-OLTG-1C (Revised 07/10) CALIFORNIA ENERGY COMMISSION

Certificate of Compliance (Page 4 of 4) OLTG-1C

Project Name: McMASTER PARK IMPROVEMENTS - RECREATIONAL CENTER | Date: 08-06-2013

1. Insert: ***OMS*** *for Outdoor Motion Sensor;* ***OLSC*** *for Outdoor Lighting Shutoff Controls;* ***OP*** *for Outdoor Photocontrol;* ***ATS*** *for Astronomical Time Switch, and,* ***STS*** *for Standard (non-astronomical) Time Switch acceptance.*

ALLOWED AND INSTALLED OUTDOOR LIGHTING POWER

		Lighting Wattage Power Allowance
A	Lighting power allowance for general hardscape (from OLTG-2C Page 1 of 3)	670.3
B	Specific application lighting wattage allowance per unit length (from OLTG-2C Page 1 of 3)	
C	Specific application wattage allowance for ornamental lighting (from OLTG-2C Page 1 of 3)	
D	Specific application wattage allowance per application (from OLTG-2C Page 2 of 3)	240
E	Specific application lighting wattage allowance per area (from OLTG-2C Page 2 of 3)	
F	Additional lighting power allowance for ordinance requirements (from OLTG-2C Page 3 of 3)	
G	Total Allowed Wattage = Sum of rows A through F:	910.3
H	Total Installed Watts (from Luminaire Schedule, (from OLTG-1C (Page 2 of 4)	578

Provided that the lighting wattage power allowances listed in rows A through F are identical to the lighting wattage power allowances taken from OLTG-2C Pages 1 through 3, complies if Installed Wattage in row H is less than or equal to the Total Installed Wattage in row G ☑ Yes ☐ No

STATE OF CALIFORNIA
OUTDOOR LIGHTING WORKSHEET
CEC-OLTG-2C (Revised 03/10) CALIFORNIA ENERGY COMMISSION

OUTDOOR LIGHTING WORKSHEET (Page 1 of 3) OLTG-2C

Project Name: McMASTER PARK IMPROVEMENTS - RECREATIONAL CENTER | Date: 08-06-2013

A. LIGHTING POWER ALLOWANCE FOR GENERAL HARDSCAPE

AREA WATTAGE ALLOWANCE (AWA)			LINEAR WATTAGE ALLOWANCE (LWA)			INITIAL WATTAGE ALLOWANCE	TOTAL GENERAL HARDSCAPE LIGHTING ALLOWANCE
A	B	C	D	E	F	G	H
ILLUMINATED HARDSCAPE AREA	AWA PER SQUARE FOOT	AWA (A X B)	PERIMETER LENGTH OF GENERAL HARDSCAPE	LWA PER LINEAR FOOT	LWA (D X E)	IWA (WATTS)	C + F + G
1645	.036	59.22	753	.36	271.08	340	670.3
Enter total into OLTG-1C; Page 4 of 4; Row A; Lighting Power Allowance for General Hardscape:							670.3

☐ Yes: AWA, LWA, and IWA from Table 147-A was used as appropriate for the Outdoor Lighting Zone

B. SPECIFIC APPLICATION LIGHTING WATTAGE ALLOWANCE PER UNIT LENGTH (Available only for sales frontage)

DETERMINE WATTAGE ALLOWANCE				LUMINAIRE TYPE		DESIGN WATTS			
A	B	C	D	E	F	G	H	I	J
Specific Lighting Application	Linear Feet of Frontage	Sales Frontage allowance for OLZ (watts per lf)	Wattage Allowance (B x C)	Name or Symbol	Luminaire Type	Luminaire Quantity	Watts per Luminaire	Design Watts (G x H)	Allowed Watts Minimum of D or I
Enter total into OLTG-1C; Page 4 of 4; Row B; Specific Application Lighting Wattage Allowance Per Unit Length									

C. SPECIFIC APPLICATION WATTAGE ALLOWANCE FOR ORNAMENTAL LIGHTING

DETERMINE WATTAGE ALLOWANCE				LUMINAIRE TYPE		DESIGN WATTS			
A	B	C	D	E	F	G	H	I	J
Specific Lighting Application	Square feet of Hardscape	Ornamental Lighting Allowance for OLZ (watts per ft^2)	Wattage Allowance (B x C)	Name or Symbol	Luminaire Type	Luminaire Quantity	Watts per Luminaire	Design Watts (G x H)	Allowed Watts Minimum of D or I
Enter total into OLTG-1C; Page 4 of 4; Row C: Specific Application Wattage Allowance for Ornamental Lighting									

STATE OF CALIFORNIA
OUTDOOR LIGHTING WORKSHEET
CEC-OLTG-2C (Revised 03/10) CALIFORNIA ENERGY COMMISSION

OUTDOOR LIGHTING WORKSHEET (Page 2 of 3) OLTG-2C

Project Name: McMASTER PARK IMPROVEMENTS - RECREATIONAL CENTER | Date: 08-06-2013

D. SPECIFIC APPLICATION LIGHTING WATTAGE ALLOWANCE PER APPLICATION

DETERMINE WATTAGE ALLOWANCE				DESIGN WATTS					ALLOWANCE
A	B	C	D	E	F	G	H	I	J
Specific Lighting Application	Number of Applications	Specific Application Allowance (watts)	Wattage Allowance (B x C)	Luminaire Symbol	Luminaire Type	Luminaire Quantity	Watts per Luminaire	Design Watts (G x H)	Allowed Watts Minimum of D or I
ENTRANCES OR EXITS	8	30	240	WP	WALLPACK, CFTR26W/GX24Q-3	8	28	224	240
Enter total into OLTG-1C; Page 4 of 4; Row D; Specific Application Wattage Allowance Per Application									240

E. SPECIFIC APPLICATION LIGHTING WATTAGE ALLOWANCE PER AREA

DETERMINE WATTAGE ALLOWANCE				LUMINAIRE TYPE		DESIGN WATTS			
A	B	C	D	E	F	G	H	I	J
Specific Lighting Application	Illuminated Area of Application	Specific Application Allowance (watts per ft^2)	Wattage Allowance (B x C)	Code for Luminaire Type	Luminaire Type	Luminaire Quantity	Watts per Luminaire	Design Watts (G x H)	Allowed Watts Minimum of D or I
Enter total into OLTG-1C; Page 4 of 4; Row E; Specific Application Lighting Wattage Allowance Per Area									

SC CONSULTING GROUP
24881 ALICIA PARKWAY #317
LAGUNA HILLS, CA 92653
949.280.4782
ed@eccg-inc.com
ARCHITECT • ENGINEER

REGISTERED PROFESSIONAL ENGINEER
ERIC FERNANDEZ
No. E-012496
EXP. 9/30/15
ELECTRICAL
STATE OF CALIFORNIA

LINKTURE CONSULTING ENGINEERS
15 FLAGSTONE
TRABUCO CANYON, CA 92679
(949) 589-1909 FAX
(949) 999-1188 FAX
email@linkture.com
www.linkture.com

MCMASTER PARK IMPROVEMENTS

3624 W. ARTESIA BOULEVARD,
TORRANCE, CALIF

Sheet Title

RECREATION CENTER TITLE 24 OUTDOOR COMPLIANCE FORMS

REVISIONS		
No.	Description	Date
~~A~~	~~Health Dept Remisr Set~~	~~11-01-13~~
1	GENERAL REVISIONS	09-03-14

Drawn	ecc
Project #	13-6018
Plot Date	07-25-14

Scale:

THIS DOCUMENT, WHICH INCORPORATES THE DESIGN CONCEPTS, DRAWINGS, SPECIFICATIONS AND WRITTEN MATERIAL CONTAINED HEREIN, AS AN INSTRUMENT OF SERVICE, IS THE PROPERTY OF LINKTURE CORP AND CANNOT BE COPIED OR USED IN WHOLE OR IN PART FOR ANY OTHERS BUT ITS ORIGINAL PURPOSE, WITHOUT THE WRITTEN AUTHORIZATION OF LINKTURE CORP. ©

E-4.4

Sheet Number of