PROPOSAL, SPECIFICATIONS, BOND AND AFFIDAVIT FOR THE CONSTRUCTION OF

AMIE BASIN PUMP STATION UPGRADES, I-132

B2016-55

REGISTERED PROFESSIONAL ENGINEER
Craig Bilezerian
No. 55339
Exp. 12-31-16
CIVIL
STATE OF CALIFORNIA

Craig Bilezerian
City Engineer

October 2016

SECTION A

NOTICE INVITING BIDS

CITY OF TORRANCE, CALIFORNIA

NOTICE INVITING BIDS

Notice is hereby given that sealed bids for performing the following described work will be received at the Office of the City Clerk of the City of Torrance, California, **until 3:00 p.m. on Wednesday, November 16, 2016,** after which time they will be publicly opened and read at 3:15 p.m. in the Council Chambers of said City:

CONSTRUCTION OF
Amie Basin Pump Station, I-132

B2016-55

Plans and Specifications are available on the City's website at http://www.torranceca.gov/3239.htm

Those who only view and/or print the Plans and Specifications from the City's website will not automatically be added to the City's Plan Holder list for this project.

The official Bidder's Submittal packet must be obtained from the Office of the City Clerk, City Hall, 3031 Torrance Boulevard, Torrance, California. Contact the City Clerk's office at (310) 781-7530 or CityClerk@TorranceCA.gov for more information. There is no cost if the Bidder's Submittal is obtained at City Hall. A payment of $5 is required if requested by mail. The amount includes tax and is not refundable. A prospective bidder must provide to the City Clerk the firm's name, address, telephone and fax numbers, a contact person and a valid email address. This will ensure that your firm is listed as a "Plan Holder" and that you will be informed of any and all information issued subsequent to obtaining the official form of Proposal. Addenda will be issued only by email and only to those that provide the required information to the City Clerk. Receipt of any Addendum must be acknowledged by a bidder in its submitted form of Proposal. **If a bidder submits its Bidder's Submittal on forms other than the official Bidder's Submittal forms, the City may declare the bid as non-responsive**.

Full-size 24" x 36" Plans and a bound Specifications booklet may also be obtained at the same Office of the City Clerk, upon payment of $65 if obtained at City Hall, or payment of $75 if requested by mail. Both amounts include tax. Neither amount is refundable. They include a copy of the official Bidder's Submittal packet. If requesting any item(s) by mail, please send check to the following:

CITY OF TORRANCE
OFFICE OF THE CITY CLERK
3031 TORRANCE BLVD
TORRANCE, CA 90509
ATTN: B2016-55

Notice of Mandatory Pre-Bid Conference

The pre-bid conference will start promptly at the time and location listed below. You must arrive on time and stay for the entire conference No Exceptions

Location:	City Yard, Public Works Training Room 20500 Madrona Ave., Torrance CA 90503
Date:	November 2, 2016
Time:	10:00 am, Pacific Time

The Engineer's estimate of the contract total is between $1,200,000 and $1,400,000. All work shall be completed within 188 working days from the date of the Notice to Proceed (NTP).

Per Division 2, Chapter 2 of the Torrance Municipal Code, the Torrance City Council may reject any and all bids, waive any informality or irregularity in such bids, and determine the lowest responsible bidder. No facsimile bids shall be accepted by the City.

Substitution of securities for withheld funds is permitted per Section 22300 of the Public Contract Code.

The City has determined that a Class **A** Contractor's license is necessary to bid this project, but reserves the right to accept another Class at the sole discretion of either the Public Works Director or Engineer.

Pursuant to Section 1770, et. seq., of the California Labor Code, the successful bidder shall pay not less than the prevailing rate of per diem wages as determined by the Director of the California Department of Industrial Relations. These wage rates are available from the California Department of Industrial Relations' Internet website at http://www.dir.ca.gov/DLSR/PWD

Pursuant to Section 1725.5 of the California Labor Code, no contractor or subcontractor may be awarded a contract for public work on a public works project unless registered with the Department of Industrial Relations at the time the contract is awarded. Contractors and subcontractors may find additional information for registering at the Department of Industrial Relations website at http://www.dir.ca.gov/Public-Works/PublicWorks.html.

Pursuant to Labor Code section 1771.1, no contractor or subcontractor may be listed on a bid proposal for a public works project submitted on or after March 1, 2015 unless registered with the Department of Industrial Relations. Furthermore, all bidders and contractors are hereby notified that no contractor or subcontractor may be awarded, on or after April 1, 2015, a contract for public work on a public works project unless registered with the Department of Industrial Relations.

Pursuant to Labor Code section 1771.4, all bidders are hereby notified that this project is subject to compliance monitoring and enforcement by the Department of Industrial Relations. Also refer to Special Provisions Section 7-2.6 of this document. (SB854)

By order of the City Council of the City of Torrance, California.

For further information, please contact John Dettle, Engineering Manager in the Public Works Department at (310) 618-3059 or via the main office at (310) 781-6900.

SECTION B

INSTRUCTIONS TO BIDDERS

CITY OF TORRANCE, CALIFORNIA

INSTRUCTIONS TO BIDDERS

A. QUALIFICATION OF BIDDERS

1. Competency of Bidders

The Bidder shall be thoroughly competent and capable of satisfactorily performing the Work covered by the Bid. As specified in the Bid Documents, the Bidder shall furnish statements of previous experience on similar work. When requested, the Bidder shall also furnish the plan of procedure proposed; the organization, machinery, plant and other equipment available for the Work; evidence of its financial condition and resources; and any other such documentation as may be required by the City to determine if the Bidder is responsible.

2. Contractor's License

At the time of submitting the Bid, the Bidder shall be licensed as a contractor in accordance with the provisions of Chapter 9, Division 3, of the California Business and Professions Code. The required prime contractor license class for the Work is shown in the project Notice Inviting Bids. However, the City reserves the right to award the Contract to a contractor with another class if the City determines that the license is proper for the work.

3. Contractor Registration Requirements

SB 854 amended the Labor Code to require all contractors bidding on public work to register with the Department of Industrial Relations (DIR) and to pay an annual fee. The registration requires contractors to provide the State with evidence of the contractors' compliance with a number of statutory requirements. The registration requirement took effect on July 1, 2014.

4. Bidder's Submittal and Contract Award Prohibited

Under California Labor Code section 1771.1, as amended by SB 854, unless registered with the DIR, a contractor may not bid, nor be listed as a subcontractor, for any bid proposal submitted for public work on or after March 1, 2015. Similarly, a public entity cannot award a public work contract to a non-registered contractor, effective April 1, 2015. Also refer to Section 7-2.6 of the Special Provisions.

B. BIDDER RESPONSIBILITY

A responsible Bidder is a Bidder who has demonstrated the attribute of trustworthiness, as well as ability, fitness, capacity and experience to satisfactorily perform the work.

Bidders are notified that, in accordance with Division 2, Chapter 2 of the Torrance Municipal Code, the City Council may determine whether the Bidder is responsible based on a review of the Bidder's performance on other contracts.

If, based on the provision and criteria in Division 2, Chapter 2 of the Torrance Municipal Code, the Public Works Director proposes not to recommend the award of contract to the

apparent low bidder, the Director shall notify the Bidder in writing of its intention to recommend to the City Council that the Council award the contract to the 2nd lowest responsible bidder. If the Bidder presents evidence in rebuttal to the recommendation, the Director shall evaluate the merits of such evidence, and based on that evaluation, make a recommendation to the City Council.

C. ADDENDA TO THE CONTRACT DOCUMENTS

The City may issue Addenda to the Contract Documents during the period of advertising for any reason. Addenda will be issued only by email and to those considered "Plan Holders". Refer to the Notice Inviting Bid for instructions on becoming a "Plan Holder". The Bidder shall acknowledge the receipt of the Addenda in their Bid. Failure of the Bidder to do so may result in the rejection of the Bid as non-responsive.

D. PREPARATION OF THE BID

1. Examination of Site, Plans and Specifications

Prior to submitting a Bid, the Bidder shall examine the Plans and the Work site, carefully read the Specifications, and satisfy itself that it has the abilities and resources to complete the Work. The Bidder agrees that if it is awarded the Contract, no claim will be made against the City based on ignorance or misunderstanding of the provisions of the Contract Documents, the nature and amount of the work, and the physical and climatic conditions of the work site.

2. Estimated Quantities

The quantities shown in the Bid are approximate only. The Contractor will be paid for the actual quantities of work based on field measurements as provided for in these Specifications. The City reserves the right to increase or decrease the amount of any item or portion of work to be performed or materials furnished, or to delete any item, in accordance with the Specifications.

3. Bid Instructions and Submissions

The Bid shall be submitted on the Bidder's Submittal forms provided by the City Clerk. All Bid Documents listed below must be completed, executed and submitted with the Bid by the Bidder.

Required Bidder's Submittal Documents:

1) Bidder's Submittal
2) Addenda Acknowledgment Of Addenda Received
3) Contractor's Affidavit
4) List of Subcontractors
5) References (2 pages)
6) Violations of Federal or State Law
7) Disqualification or Debarment
8) Bid Bond (10%)

All prices submitted will be considered as including any and all sales or use taxes. For any individual bid item, in the case of a discrepancy between its unit price and total bid, the unit price shall always prevail.

4. Disadvantaged Business Enterprise (DBE) Requirements

This project has no DBE requirements.

E. BID BOND

The Bid must be accompanied by either cash, a certified or cashier's check or a surety bond (bid bond) payable to the City of Torrance. Bids must be submitted on the proposal forms furnished by the City Clerk. The Bid Guaranty shall be in an amount equivalent to at least 10% of the Total Contract Bid Price.

F. NONRESPONSIVE BIDS AND BID REJECTION

1. A Bid in which any one (1) of the required Bidder's submittal documents are not completed, executed and submitted may be considered non-responsive and be rejected.

2. A Bid in which the Contract Unit Prices are unbalanced, which is incomplete or which shows alteration of form or irregularities of any kind, or which contains any additions or conditional or alternate Bids that are not called for, may be considered non-responsive and be rejected.

G. AWARD OF CONTRACT

In accordance with Division 2, Chapter 2 of the Torrance Municipal Code, the City Council reserves the right to reject any and all bids received, to take all bids under advisement for a period not-to-exceed sixty (60) days after date of opening thereof, to waive any informality or irregularity in the Bid, and to be the sole judge of the merits of material included in the respective bids received.

No less than 2 weeks prior to the anticipated City Council meeting awarding a contract as a result of the Notice Inviting Bids, the City will notify all of the vendors that submitted a bid of the intention to award.

City of Torrance Bid/RFP Protest Procedures: The City of Torrance Bid/RFP Protest Procedures may be found on the City of Torrance website:
http://www.torranceca.gov/PDF/Bid_RFP_Protest_Procedures.pdf

H. EXECUTION OF CONTRACT

After the Contract is awarded, the awardee shall execute the following eight (8) documents:

1) Performance Bond (100% of Bid)
2) Labor and Material Bond (100% of Bid)
3) Contract (Public Works Agreement)
4) Verification of Insurance Coverage (Certificates and Endorsements)
5) Construction or Service Contract Endorsement
6) Workers' Compensation Insurance Certificate
7) Construction Permit Application Form
8) Business License Application Form

I. APPRENTICESHIP EMPLOYMENT STANDARDS

The Contractor is directed to the provisions in Sections 1776, 1777.5 and 1777.6 of the California Labor Code concerning the employment of apprentices by the contractor or any subcontractor under them.

J. PERMITS, LICENSES AND PUBLIC WORKS AGREEMENT

The Contractor shall procure and execute all permits, licenses, pay all charges and fees, and give all notices necessary and incidental to the completion of the Work. The Contractor shall execute a Public Works Agreement. No fee is charged for a Construction-Excavation Permit issued by the City of Torrance for a public works project. The Contractor shall obtain a City of Torrance Business License.

K. INSURANCE

The Contractor shall maintain Automobile Liability, General Liability and Workers' Compensation Insurance as specified in the Public Works Agreement included in the Project Specifications.

L. PRE-BID INQUIRIES

A Bidder with a Pre-Bid Inquiry must submit their question(s) in writing to the Torrance Public Works Department. Any and all questions must be emailed to John Dettle, Engineering Manager at jdettle@torranceca.gov. Please list "**Amie Basin Pump Station Upgrades RFI**" in the subject line of the email.

All questions must be received no later than 1:00 p.m. on the Wednesday one week prior to the date for opening the bids. Questions received after this date may not be considered. For questions of a general nature, a bidder may call John Dettle directly at (310) 618-3059.

SECTION C

BID DOCUMENTS

BIDDER'S SUBMITTAL

Company: _____ Total Bid: _____

PROPOSAL, SPECIFICATIONS, BOND AND AFFIDAVIT FOR THE CONSTRUCTION OF
Amie Basin Pump Station Upgrades, I-132

B2016-55

Honorable Mayor and Members
of the Torrance City Council
Torrance, California

Members of the Council:

In accordance with the Notice Inviting Bids pertaining to the receiving of sealed proposals by the City Clerk of the City of Torrance for the above titled improvement, the undersigned hereby proposes to furnish all Work to be performed in accordance with the Plans, Specifications, Standard Drawings, and the Contract Documents, for the unit price or lump sum set forth in the following schedule.

BID SCHEDULE

Item #	Est. Qty	Unit	Bid Item Description	SPEC. SECTION	Unit Price	Total Bid
			MISCELLANEOUS			
1	1	LS	**MOBILIZATION (5% MAX. OF TOTAL BID SCHEDULE COST)**	9-3.4	$	$
2	1	LS	**TRAFFIC CONTROL**	7-10.2.3 7-10.6	$	$
3	1	EA	**REMOVE AND REPLACE PROJECT CONSTRUCTION SIGN**	7-15	$	$
4	1	LS	**SAWCUT AND REMOVE AC PAVING**	300-1.3	$	$
5	1	LS	**DEMO PORTION OF EXISTING CMU WALL AND FOOTINGS**	300-1.3	$	$
6	50	SF	**DEMOLISH CONCRETE EQUIPMENT PAD**	300-1.3	$	$
7	80	LF	**REMOVE EXISTING CHAIN LINK FENCE, FOOTINGS AND GATE**	300-1.3	$	$
8	1	LS	**REMOVE PIPE AND FITTINGS ON (2) 10" AND (1) 14" FORCE MAINS NEAR MCC**	300-1.3	$	$
9	1	LS	**MISCELLANEOUS REMOVALS AT PUMP STATION**	300-1.3	$	$
10	1	LS	**CUT AND REMOVE PIPES AT EXISTING PUMPS**	300-1.3	$	$

Item #	Est. Qty	Unit	Bid Item Description	SPEC. SECTION	Unit Price	Total Bid
11	1	LS	SALVAGE AND RETURN EXISTING PUMPS TO CITY	300-1.3	$	$
			NEW CONSTRUCTION			
12	1	LS	DEWATERING AND CLEANING VAULTS	306-1.1.8		
13	1	LS	4" CRUSHED AGGREGATE BASE (CMB)	301-2.4	$	$
14	1	LS	4" AC PAVING TYPE B-PG-64-10	203-6.1	$	$
15	62	LF	NEW CHAIN LINK FENCE AND BOLLARDS		$	$
16	2	EA	NEW CHAIN LINK FENCE SLIDING GATES		$	$
17	4	EA	PIPE BOLLARDS AT TRANSFORMER		$	$
18	1	LS	NEW VALVE, PIPE AND PIPE FITTINGS ON (2) 10" AND (1) 14" FORCE MAINS NEAR MCC		$	$
19	1	LS	PIPING, JOINTS, AND PARTS FOR 10" DIP FORCE MAIN AT PUMP STATION		$	$
20	1	LS	PIPING, JOINTS, AND PARTS FOR 14" DIP FORCE MAIN AT PUMP STATION		$	$
21	2	EA	FURNISH, INSTALL AND MAKE OPERABLE NEW 150 H.P. PUMP		$	$
22	1	EA	FURNISH, INSTALL AND MAKE OPERABLE NEW 250 H.P. PUMP		$	$
23	1	EA	750 KVA UTILITY TRANSFORMER		$	$
24	1	EA	TRANSFORMER SLAB BOX		$	$
25	1	EA	SWITCHBOARD & MCC		$	$
26	9	EA	UNDERGROUND PULL BOX		$	$
27	110	LF	3" PVC SCH. 40 CONDUIT		$	$
28	240	LF	(2) 2½" Ø PVC SCH. 40 CONDUIT, U/G		$	$
29	430	LF	(4) 1¼" Ø PVC SCH. 40 CONDUIT, U/G		$	$
30	4	EA	SEAL LEAKAGE DETECTOR, U/G		$	$

Item #	Est. Qty	Unit	Bid Item Description	SPEC. SECTION	Unit Price	Total Bid
31	1	LS	GROUNDING (TRANSFORMER AND SWITCHBOARD)		$	$
32	50	LF	5" PVC SCH. 40 CONDUIT FOR UTILITY POWER		$	$
33	1	LS	CONNECTION TO UTILITY POWER LINE		$	$
34	1	LS	MISCELLANEOUS ELECTRICAL FITTINGS, ELBOWS, SLEEVES, SEALS, ETC.		$	$
35	1	LS	CONCRETE PAD FOR MCC AND SWITCHBOARD		$	$
36	1	LS	MISCELLANEOUS WIRE AND FLOAT CONTROL SYSTEM		$	$
37	25	LF	TRENCHING, BACKFILL AND SURFACE REPAIR FOR UTILITY POWER		$	$
38	100	LF	TRENCHING, BACKFILL AND SURFACE REPAIR		$	$
39	175	LF	MEDIUM VOLTAGE SINGLE CABLE FOR UTILITY POWER		$	$
40	1,070	LF	3" RGS ABOVE GROUND		$	$
41	1,900	LF	2½" RGS ABOVE GROUND		$	$
42	1,025	LF	1¼" RGS ABOVE GROUND		$	$
43	1	LS	PUMP CONTROLLER INCLUDING PROGRAMMING		$	$
44	1	LS	INTERFACE WITH (E) TELEMETRY SYSTEM		$	$
45	5	EA	STAINLESS STEEL FRAME AND BIO FILTER MEDIA		$	$
46	1	LS	60 DAY START UP AND O&M MANUALS		$10,000	$10,000

TOTAL BID PRICE $_____
(Figures)*

TOTAL BID PRICE: _____
(Words)*

_____

***BID MAY BE REJECTED IF TOTAL IS NOT SHOWN IN FIGURES AND WORDS.**

B2016-55

BIDDER'S SUBMITTAL (Continued) B2016-55

The undersigned furthermore agrees to enter into and execute a contract, with necessary bonds, at the unit prices set forth herein and in case of default in executing such contract, with necessary bonds, the check or bond accompanying this bid and the money payable thereon shall be forfeited thereby to and remain the property of the City of Torrance.

The above unit prices include all work appurtenant to the various items as outlined in the Specifications and all work or expense required for the satisfactory completion of said items. In case of discrepancies between unit prices and totals, the unit prices shall govern.

The undersigned declares that it has carefully examined the Plans, Specifications, and Contract Documents, and has investigated the site of the work and is familiar with the conditions thereon.

Contractor:_____

Date: _____ By:_____

Contractor's State License No. _____ Class_____

Address:_____

Phone: _____

Fax: _____

ACKNOWLEDGMENT OF ADDENDA RECEIVED – B2016-55

The Bidder shall acknowledge the receipt of addenda by placing an "X" by each addendum received.

Addendum No. 1 ____

Addendum No. 2 ____

Addendum No. 3 ____

Addendum No. 4 ____

Addendum No. 5 ____

Addendum No. 6 ____

Addendum No. 7 ____

Addendum No. 8 ____

If an addendum or addenda have been issued by the City and not noted above as being received by the Bidder, the Bid Proposal may be rejected.

_____ _____

Bidder's Signature Date

CONTRACTOR'S AFFIDAVIT

STATE OF CALIFORNIA }
}
COUNTY OF _____} **B2016-55**

_____, being first duly sworn, deposes and says:

1. That he is the

_____
Title

of _____
(Name of Partnership, Corporation, or Sole Proprietorship)

hereinafter called "Contractor," who has submitted to the City of Torrance a proposal for the Construction of Amie Basin Pump Station Upgrades, I-132, B2016-55;

2. That said proposal is genuine; that the same is not sham; that all statement of facts therein are true;

3. That such proposal was not made in the interest or behalf of any person, partnership, company, association, organization or corporation not named or disclosed;

4. That the Contractor did not, directly or indirectly, induce, solicit or agree with anyone else to submit a false or sham bid, to refrain from bidding, or to withdraw the bid, to raise or fix the bid price of the Contractor or anyone else, or to raise or fix any overhead, profit or cost element of the Contractor's price or the price of anyone else; and did not attempt to induce action prejudicial to the interest of the City of Torrance, or of any other bidder, or anyone else interested in the proposed contract;

5. That the Contractor has not in any manner sought by collusion to secure for itself an advantage over any other bidder or to induce action prejudicial to the interests of the City of Torrance, or of any other bidder or of anyone else interested in the proposed contract;

6. That the Contractor has not accepted any bid from any subcontractor or materialman through any bid depository, the bylaws, rules or regulations of which prohibit or prevent the Contractor from considering any bid from any subcontractor or materialman, which is not processed through said bid depository, or which prevent any subcontractor or materialman from bidding to any contractor who does not use the facilities of or accept bids from or through such bid depository;

7. That the Contractor did not, directly or indirectly, submit the Contractor's bid price or any breakdown thereof, or the contents thereof, or divulge information or data relative thereto, to any corporation, partnership, company, association, organization, bid depository, or to any member or agent thereof, or to any individual or group of Individuals, except to the City of Torrance, or to any person or persons who have a partnership or other financial interest with said Contractor in its business.

Dated this _____ day of _____, 20___.

Subscribed and Sworn to
before me this _____ day
of _____, 20___.

_____
(Contractor)

_____
(Title)

_____
Notary Public in and for said
County and State.
(Seal)

LIST OF SUBCONTRACTORS: B2016-55

The Bidder is required to fill in the following blanks in accordance with the provisions of the California Public Contract Code Sections 4100-4114, CHAPTER 4. SUBLETTING AND SUBCONTRACTING. The contractor, sub recipient or subcontractor shall not discriminate on the basis of race, color, national origin, or sex in the performance of this contract. The contractor shall carry out applicable requirements of Title 49 CFR (Code of Federal Regulations) part 26 in the award and administration of US DOT assisted contracts. Failure by the contractor to carry out these requirements is a material breach of this contract, which may result in the termination of this contract or such other remedy, as the recipient deems appropriate. Each subcontract signed by the bidder must include this assurance. Failure of the bidder to fulfill the requirements of the Special Provisions for submittals required to be furnished after bid opening, including but not limited to escrowed bid documents, where applicable, may subject the bidder to a determination of the bidder's responsibility in the event it is the apparent low bidder on a future public works contracts.

Name Under Which Subcontractor is Licensed: _____

Subcontractor's Address: _____

Specific Description of Sub-Contract: _____

License Number: _____ CA License Classification/Type: _____

Name Under Which Subcontractor is Licensed: _____

Subcontractor's Address: _____

Specific Description of Sub-Contract: _____

License Number: _____ CA License Classification/Type: _____

Name Under Which Subcontractor is Licensed: _____

Subcontractor's Address: _____

Specific Description of Sub-Contract: _____

License Number: _____ CA License Classification/Type: _____

Subcontractors listed must be properly licensed under the laws of the State of California for the type of work which they are to perform. Do not list alternate subcontractors for the same work.

The Bidding Contractor must include each subcontractor's contract license number (AB 44). An inadvertent error in listing the subcontractor's license number shall not be grounds for filing a bid protest, or grounds for considering the bid nonresponsive, if the corrected contractor's license number is submitted to the public entity by the prime contractor within 24 hours after the bid opening – provided that the corrected license number corresponds to the submitted name and location of the subcontractor.

REFERENCES (Page 1 of 2)
B2016-55

List work similar in magnitude and degree of difficulty completed by the Contractor within the past three (3) years.

1. Name (Firm/Agency): _____
   Address: _____
   Contact Person: _____ Telephone No.: _____
   Title of Project: _____
   Project Location: _____
   Date of Completion: _____ Contract Amount: $ _____

2. Name (Firm/Agency): _____
   Address: _____
   Contact Person: _____ Telephone No.: _____
   Title of Project: _____
   Project Location: _____
   Date of Completion: _____ Contract Amount: $ _____

3. Name (Firm/Agency): _____
   Address: _____
   Contact Person: _____ Telephone No.: _____
   Title of Project: _____
   Project Location: _____
   Date of Completion: _____ Contract Amount: $ _____

4. Name (Firm/Agency): _____
   Address: _____
   Contact Person: _____ Telephone No.: _____
   Title of Project: _____
   Project Location: _____
   Date of Completion: _____ Contract Amount: $ _____

REFERENCES (PAGE 2 OF 2)
B2016-55

If Contractor has not performed work for the City of Torrance within the last five (5) years, list all work done within said five years (attach additional sheets if necessary). Note if work was done as subcontractor [include only subcontract amount]:

Work Description & Contract Amount	Agency	Date Completed

Contractor's License No.: _____ Class: _____

a. Date first obtained: _____ Expiration: _____

b. Has License ever been suspended or revoked? _____

If yes, describe when and why: _____

c. Any current claims against License or Bond? _____

If yes, describe claims: _____

Principals in Company (List all – attach additional sheets if necessary):

NAME	TITLE (If Applicable)	LICENSE NO.

VIOLATIONS OF FEDERAL, STATE OR LOCAL LAWS
B2016-55

1. Has your firm or its officers been assessed any penalties by an agency for noncompliance or violations of Federal, State or Local labor laws and/or business or licensing regulations within the past five (5) years relating to your construction projects?

   Yes/No: _____ Federal/State: _____

   If "yes," identify and describe, (including agency and status): _____

   _____

   _____

   _____

   Have the penalties been paid? Yes/No: _____

2. Does your firm or its officers have any ongoing investigations by any public agency regarding violations of the State Labor Code, California Business and Professions Code or State Licensing Laws?

   Yes/No: _____ Code/Laws: _____ Section/Article: _____

   If "yes," identify and describe, (including agency and status): _____

   _____

   _____

   _____

DISQUALIFICATION OR DEBARMENT

Has your firm, any officer of your firm, or any employee who has a proprietary interest in your firm ever been disqualified, removed, or otherwise prevented from bidding on, performing work on, or completing a federal, state or local project because of a violation of law or a safety regulation? Yes/No: _____. If yes, provide the following information (if more than once, use separate sheets):

Date: _____ Entity: _____

Location: _____

Reason: _____

_____

_____

_____

_____

Provide Status and any Supplemental Statement: _____

_____

_____

_____

_____

Has your firm been reinstated by this entity? Yes/No: _____

BID BOND (10%)
B2016-55

KNOW ALL MEN BY THESE PRESENTS: That we, _____

_____

as principal, and _____

as sureties, are held and firmly bound unto the City of Torrance, State of California, in the penal sum of _____ dollars ($_____), for the payment whereof we hereby bind ourselves, our successors, heirs, executors or administrators jointly and severally, firmly by these presents.

The condition of this obligation is such that, whereas the above bounded principal is about to file with and submit to the City of Torrance a bid or proposal for the performance of certain work as required in the City of Torrance, Project No. B2016-XX said work being: the Amie Basin Pump Station Upgrades, I-132, and in compliance with the Specifications therefor under an invitation of said City contained in a notice or advertisement for bids or proposals; now if the bid or proposal of the said principal shall be accepted and if the said work be thereupon awarded to the principal by said City and if the said principal shall enter into a contract with the said City in accordance with said bid or proposal, or if the bid or proposal of the said principal is rejected, then this bond shall be void and of no effect and otherwise in full force and effect.

WITNESS our hands this _____ day of _____, 20___.

_____
Principal

_____
Surety/Attorney-in-Fact

_____
Signature

Name: _____
Local Address: _____
_____
Phone No.: _____
Fax No.: _____

SECTION D

DOCUMENTS TO BE COMPLETED AND DELIVERED TO CITY AFTER AWARD OF CONTRACT (PUBLIC WORKS AGREEMENT) BY THE CITY COUNCIL

PERFORMANCE BOND

KNOW ALL MEN BY THESE PRESENTS:

That we, _____as Principal(s) and _____a corporation, incorporated, organized, and existing under the laws of the State of _____, and authorized to execute bonds and undertakings and to do a general surety business in the State of California, as Surety, are jointly and severally held and firmly bound unto the City of Torrance, a municipal corporation, located in the County of Los Angeles, State of California, in the full and just sum of: _____ Dollars ($_____), lawful money of the United States of America, for the payment of which sum, well and truly to be made, we bind ourselves and our respective heirs, executors, administrators, representative, successors and assigns, jointly and severally, firmly by these presents.

THE CONDITION OF THIS OBLIGATION IS SUCH, that: **WHEREAS,** said Principal(s) have/has entered into, or are/is about to enter into, a certain written contract or agreement, dated as of the _____ day of _____, 20____, with the said City of Torrance for the Construction of Amie Basin Pump Station Upgrades, I-132, B2016-XX all as is more specifically set forth in said contract or agreement, a full, true and correct copy of which is hereunto attached, and hereby referred to and by this reference incorporated herein and made a part hereof;

NOW, THEREFORE, if the said Principal(s) shall faithfully and well and truly do, perform and complete, or cause to be done, performed and complete, each and all of the covenants, terms, conditions, requirements, obligations, acts and things, to be met, done or performed by said Principal(s), including any guarantee period as set forth in, or required by, said contract or agreement, all at and within the time or times, and in the manner as therein specified and contemplated, then this bond and obligation shall be null and void; otherwise it shall be and remain in full force, virtue and effect.

The said Surety, for value received, hereby stipulates and agrees that no amendment, change, extension of time, alteration or addition to said contract or agreement, or of any feature or item or items of performance required therein or thereunder, shall in any manner affect its obligations on or under this bond; and said Surety does hereby waive notice of any such amendment, change, extension of time, alteration, or addition to said contract or agreement, and of any feature or item or items of performance required therein or thereunder.

PERFORMANCE BOND (CONTINUED)

In the event any suit, action or proceedings is instituted to recover on this bond or obligation, said Surety will pay, and does hereby agree to pay, as attorney's fees for said City, such sum as the Court in any such suit, action or proceeding may adjudge reasonable.

EXECUTED, SEALED AND DATED this _____ day of _____, 201___.

CORPORATE SEAL

PRINCIPAL(S):

BY _____

BY _____

CORPORATE SEAL

SURETY:

BY _____

LABOR AND MATERIAL BOND

KNOW ALL MEN BY THESE PRESENTS:

That we,_____
As Principal(s) and _____ a corporation, incorporated, organized, and existing under the laws of the State of _____, and authorized to execute bonds and undertakings and to do a general surety business in the State of California, as Surety, are jointly and severally held and firmly bound unto:

(a) The State of California for the use and benefit of the State Treasurer, as ex-officio Treasurer and custodian of the Unemployment Fund of said State; and

(b) The City of Torrance, California; and

(c) Any and all persons who do or perform or who did or performed work or labor upon or in connection with the work or improvement referred to in the contract or agreement hereinafter mentioned; and

(d) Any and all materialmen, persons, companies, firms, association, or corporations, supplying or furnishing any materials, provisions, provender, transportation, appliances or power, or other supplies used in, upon, for or about or in connection with the performance of the work or improvement contracted to be executed, done, made or performed under said contract or agreement; and

(e) Any and all persons, companies, firms, associations, or corporations furnishing, renting, or hiring teams, equipment, implements or machinery for, in connection with, or contributing to, said work to be done or improvement to be made under said contract or agreement; and

(f) Any and all persons, companies, firms, associations, or corporations who supply both work and materials;

and whose claim has not been paid by said Principal(s), in full and just sum of _____ Dollars ($_____), lawful money of the United States of America, for the payment of which will and truly to be made, said Principal(s) and said Surety do hereby bind themselves and their respective heirs, executors, administrators, representatives, successors and assigns, jointly and severally, firmly by these presents.

LABOR AND MATERIAL BOND (CONTINUED)

THE CONDITION OF THE FOREGOING OBLIGATION IS SUCH, THAT: WHEREAS, said Principal(s) have/has entered into or are/is about to enter into a certain written contract or agreement, dated as of the _____ day of _____20 ___, with the City of Torrance for the Construction of Amie Basin Pump Station Upgrades, I-132, Bid No. B2016-55 all as is more specifically set forth in said contract or agreement, a full, true and correct copy of which is hereunto attached, and hereby referred to and by this reference incorporated herein and made a part hereof;

NOW, THEREFORE, if the said Principal(s) (or any of his/her, its, or their subcontractors) under said contract or agreement fails or fail to pay:

(1) For any materials, provisions, provender, transportation, appliances, or power, or other supplies; or

(2) For the hire of any teams, equipment, implements, or machinery; or

(3) For any work or labor; supplies, furnished, provided, used, done or performed in, upon, for or about or in connection with the said work or improvement; or

(4) For amounts due under the Unemployment Insurance Act of the State of California with respect to such work or improvement;

the Surety on this bond will pay the same in an amount not exceeding the sum hereinabove specified in this bond; and, also, in case suit is brought upon this bond, said Surety will (and does hereby agree to) pay a reasonable attorney's fee, to be fixed and taxed as costs, and included in the judgment therein rendered.

This bond shall (and it is hereby made to) insure to the benefit of any and all persons entitled to file claims under Section 1192.1 of the Code of Civil Procedure of the State of California, so as to give a right of action to them or their assigns in any suit brought upon this bond, all as contemplated under the provisions of Section 4205 of the Government Code, and of Chapter 1 of Title 4 of Part 3 of the Code of Civil Procedure, of the State of California.

This bond is executed and filed in connection with said contract or agreement hereunto attached to comply with each and all of the provisions of the laws of the State of California above mentioned or referred to, and of all amendments thereto, and the obligors so intend and do hereby bind themselves accordingly.

LABOR AND MATERIAL BOND (CONTINUED)

The said Surety, for value received, hereby stipulates and agrees that no amendment, change, extension of time, alteration, or addition to said contract or agreement, or of any feature or item or items of performance required therein or thereunder, shall in any manner affect its obligations on or under this bond; and said Surety does hereby waive notice of any such amendment, change, extension of time, alteration, or addition to said contract or agreement, and of any feature or item or items of performance required therein or thereunder.

EXECUTED, SEALED AND DATED this _____ day of _____, 20_____

CORPORATE SEAL

PRINCIPAL:

BY _____

CORPORATE SEAL

SURETY:

BY _____

PUBLIC WORKS AGREEMENT

BIDDERS ARE TO REFER TO APPENDIX I FOR THE PRO FORMA PUBLIC WORKS AGREEMENT TO BE EXECUTED, UPON APPROVAL OF THE CITY COUNCIL, WITH THE CONFIRMED LOWEST, RESPONSIBLE BIDDER.

CITY OF TORRANCE
CONSTRUCTION OR SERVICE CONTRACT ENDORSEMENT

To be attached to and made a part of all policies insuring the liability of any person, form or corporation performing services under contract for the City of Torrance.

Not withstanding any inconsistent expression in the policy to which this endorsement is attached, or in any other endorsement now or hereafter attached thereto, or made a part thereof, the protection afforded by said policy shall:

1. Include the City of Torrance as an additional insured. (To include the elected officials, appointed officials, and employees.)

2. Indemnify and save harmless the City of Torrance against any and all claims resulting from the undertaking specified in the contract known as:

PROPOSAL, SPECIFICATIONS, BOND AND AFFIDAVIT
FOR THE CONSTRUCTION OF
AMIE BASIN PUMP STATION UPGRADES, I-132

B2016-55

This hold harmless assumption on the part of the underwriters shall include all costs of investigation and defense, including claims based on damage to substructures not shown, not located on the plans, or shown incorrectly.

3. Not be cancelled except by notice to the City Attorney of the City of Torrance at least thirty (30) days prior to the date of cancellation.

4. Provide single limit for Bodily Injury Liability and Property Damage Liability combined, $1,000,000 each Occurrence, and $1,000,000 Aggregate.

5. Limited classifications, restricting endorsements, exclusions or other special provisions contained in the policy shall not act to limit the benefits of coverage as they shall apply to the City of Torrance as enumerated in this endorsement. However, nothing herein contained shall affect any rights of the insurer against the insured.

6. It is further expressly agreed by and between the parties hereto that the following two provisions, (a) and (b), are a part of this contract:

   (a) That the Contractor specifically agrees to comply with applicable provisions of Section 1777.5 of the Labor Code relating to the employment by contractor or subcontractor under it, of journeyman or apprentices, or workmen, in any apprenticeable craft or trade.

   (b) By my signature hereunder, as Contractor, I certify that I am aware of the provisions of Section 3700 of the Labor Code which requires every employer to be insured against liability for Workers' Compensation or to undertake self-insurance in accordance with the provisions of that code, and I will comply with such provisions before commencing the performance of the work of this contract.

The limits of liability as stated in this endorsement apply to the insurance afforded by this endorsement notwithstanding that the policy may have lower limits of liability applying elsewhere in the policy.

_____
Duly Authorized Agent

Attached to and forming part of
Policy No. _____
of the _____

Date: _____
Expiration Date:_____

WORKERS' COMPENSATION INSURANCE CERTIFICATION

In compliance with Section 7-4 of the Standard Specifications, the Contractor shall complete and submit the following certification with a Certificate of Insurance before execution of the contract.

I am aware of, and will comply with, Section 3700 of the Labor Code, requiring every employer to be insured against liability for Workers' Compensation or to undertake self-insurance before commencing any of the work.

_____
CONTRACTOR

By: _____

Title:_____

SECTION E

SPECIAL PROVISIONS

The following Special Provisions supplement and amend the Standard Specifications for Public Works Construction (2012 Edition) and the Standard Specifications of the State of California Department of Transportation (Caltrans), latest edition, as noted herein. These Special Provisions have been arranged into a format that parallels the Standard Specifications for Public Works Construction.

SECTION E - SPECIAL PROVISIONS

Table of Contents

Page

PART 1 - GENERAL PROVISIONS

SECTION 1 -TERMS, DEFINITIONS, ABBREVIATIONS, UNITS OF MEASURE AND SYMBOLS **5**
1-2 TERMS AND DEFINITIONS
1-3 ABBREVIATIONS

SECTION 2 - SCOPE AND CONTROL OF THE WORK **5**
2-1 AWARD AND EXECUTION OF CONTRACT
2-3 SUBCONTRACTS
2-4 CONTRACT BONDS
2-5 PLANS AND SPECIFICATIONS
2-6 WORK TO BE DONE
2-10 AUTHORITY OF THE BOARD AND THE ENGINEER
2-11 INSPECTION

SECTION 3 - CHANGES IN WORK **12**
3-2 CHANGES INITIATED BY THE AGENCY
3-3 EXTRA WORK
3-4 CHANGED CONDITIONS

SECTION 4 – CONTROL OF MATERIALS **13**
4-1 MATERIALS AND WORKMANSHIP

SECTION 5 - UTILITIES **14**
5-1 LOCATION
5-2 PROTECTION
5-3 REMOVAL
5-4 RELOCATION
5-5 DELAYS

SECTION 6 - PROSECUTION, PROGRESS & ACCEPTANCE OF THE WORK **18**
6-1 CONSTRUCTION SCHEDULE AND COMMENCEMENT OF WORK
6-7 TIME OF COMPLETION
6-8 COMPLETION, ACCEPTANCE AND WARRANTY
6-9 LIQUIDATED DAMAGES
6-11 SEQUENCE OF CONSTRUCTION

SECTION 7 - RESPONSIBILITIES OF THE CONTRACTOR **21**
7-2 LABOR
7-3 INSURANCE
7-4 *NOT USED*
7-5 PERMITS
7-6 THE CONTRACTOR'S REPRESENTATIVE
7-8 WORK SITE MAINTENANCE
7-9 PROTECTION AND RESTORATION OF EXISTING IMPROVEMENTS

7-10 PUBLIC CONVENIENCE AND SAFETY
7-15 PROJECT CONSTRUCTION SIGNS

SECTION 9 - MEASUREMENT AND PAYMENT 28
9-1 MEASUREMENT OF QUANTITIES FOR UNIT PRICE WORK
9-2 LUMP SUM WORK
9-3 PAYMENT
9-4 CLAIMS

PART 2 - CONSTRUCTION MATERIALS

SECTION 200 - ROCK MATERIALS 31
200-2 UNTREATED BASE MATERIALS

SECTION 203 - BITUMINOUS MATERIALS 31
203-5 SLURRY SEAL
203-6 ASPHALT CONCRETE

SECTION 207 - PIPE 32
207-9 IRON PIPE AND FITTINGS

SECTION 210 - PAINT AND PROTECTIVE COATINGS 33
210-1 PAINT

PART 3 - CONSTRUCTION METHODS

SECTION 300 - EARTHWORK 34
300-1 CLEARING AND GRUBBING
300-2 UNCLASSIFIED EXCAVATION

SECTION 301 - TREATED SOIL, SUBGRADE PREPARATION AND PLACEMENT OF BASE MATERIALS 37
301-2 UNTREATED BASE

SECTION 302 - ROADWAY SURFACING 38
302-5 ASPHALT CONCRETE PAVEMENT

SECTION 306 - UNDERGROUND CONDUIT CONSTRUCTION 39
306-1 OPEN TRENCH OPERATIONS
306-5 ABANDONMENT OF CONDUITS AND STRUCTURES

SECTION 310 - PAINTING 45
310-5 PAINTING VARIOUS SURFACES
(Replaced with Sections 84-1 and 84-2 of Caltrans Standard Specifications)

SECTION 314 - TRAFFIC STRIPING, CURB AND PAVEMENT MARKINGS, AND PAVEMENT 49
(Replaced with Sections 85-1.06, 85-1.07 and 85-1.09 of Caltrans Standard Specifications)

85-1.06 PLACEMENT
85-1.09 PAYMENT

SECTION 315 - PUMP STATION **49**
315-1 GENERAL
315-2 PRODUCTS
315-3 EXECUTION

PART 1 - GENERAL PROVISIONS

SECTION 1 - TERMS, DEFINITIONS, ABBREVIATIONS, UNITS OF MEASURE, AND SYMBOLS

1-2 **TERMS AND DEFINITIONS**. Add or redefine the following:

Agency – The City of Torrance, herein referred to as CITY.

Board – The City Council of the City of Torrance, herein referred to as City Council.

Engineer –The Public Works Director and/or City Engineer of the City of Torrance, acting either directly or through properly authorized agents, such agents acting within the scope of the particular duties entrusted to them.

Claim - A separate demand by the Contractor for (A) a time extension, (B) payment of money or damages arising from work done by or on behalf of the Contractor pursuant to the Contract and payment of which is not otherwise expressly provided for or the claimant is not otherwise entitled to, or (C) an amount the payment of which is disputed by the Agency.

1-3 ABBREVIATIONS.

1-3.2 Common Usage:

Add the following abbreviations:

Approx	Approximate
CA	City and/or Consulting Arborist
Exist.	Existing
L.A.C.D.P.W.	Los Angeles County Department of Public Works
Med.	Median
M.L.	Main Line
OH	Overhead
Ped.	Pedestrian
Reconst.	Reconstruct
Temp.	Temporary
Theo.	Theoretical
WM	Wire mesh or water meter

SECTION 2 - SCOPE AND CONTROL OF THE WORK

2-1 AWARD AND EXECUTION OF CONTRACT. Replace the entire subsection with the following:

Within ten (10) working days after the date of the CITY'S award of contract, the Contractor shall execute and return all Contract Documents required by the CITY. The CITY reserves the right to terminate the award if the above requirement is not met. Such termination will result in the forfeiture of the Proposal Guaranty.

The Contract shall not be considered binding upon the CITY until executed by the authorized CITY officials.

2-3 SUBCONTRACTS

2-3.2 SELF PERFORMANCE. Replace the second sentence with the following:

The following work will be considered as "Specialty Items":

Design of Pump Control System

2-4 CONTRACT BONDS. Revise the second sentence of the fourth paragraph to read as follows:

The "Performance Bond" shall remain in effect for one year following the date specified in the Notice of Completion or, if no Notice of Completion is recorded, for one year following the date of final acceptance by the Engineer.

2-5. PLANS AND SPECIFICATIONS.

2-5.1 General. Add the following sentence to the first paragraph to read as follows:

The Contractor shall maintain a control set of Plans and Specifications on the Work site at all times. All final locations determined in the field, and any deviations from the Plans and Specifications, shall be marked in red on this control set to show as-built conditions. Upon completion of the Work, the Contractor shall submit the control set to the Engineer for approval. Final payment will not be made until this requirement is met.

Add the following subsections:

2-5.1.1 Plans. Included as part of the Contract Documents are the following, which show the location, character, dimensions or details of the Work:

1) Project Plans

The existing utility information and data provided with the Contract Documents are based on existing plans and documents. The plans and data are provided for information only. The Owner does not guarantee their accuracy and correctness. If the Bidder in preparing the Bid Proposal uses this information, the Bidder assumes all risks resulting from conditions differing from the information shown. The Bidder, in consideration for the information being provided, hereby releases the Owner and Consulting Engineer from any responsibility of obligation as to the accuracy of such information or for any additional compensation for work performed due to assumptions based on the use of such information.

2) Standard Plans

a. City of Torrance Standard Plans, latest edition

b. Standard Plans for Public Works Construction, latest edition, promulgated by Public Works Standards, Inc.

c. Standard Plans of the State of California Department of Transportation (Caltrans), latest edition

d. Standard Plans of the Los Angeles County Department of Public Works, latest edition

e. American Water Works Association Standards, latest edition.

Applicable Standard Plans and information for this project are included in the Appendices of these Specifications.

2-5.1.2 Specifications. The Work shall be performed or executed in accordance with these Special Provisions and the following:

1) Standard Specifications for Public Works Construction, latest edition and supplements thereto, hereinafter referred to as the Standard Specifications, as written and promulgated by Public Works Standards, Inc. The Standard Specifications are published by BNi Building News, Inc., 1612 South Clementine Street, Anaheim, CA 92802, Phone: (800) 873-6397.

2) Sections 56-2, 84, 85, and 86 of the State of California Department of Transportation (Caltrans) Standard Specifications, latest edition

3) American Water Works Association Standards, latest edition.

2-5.2 Precedence of Contract Documents. Replace the entire subsection with the following:

If there is a conflict between any of the Contract Documents, the document highest in precedence shall control. The order of precedence shall be as follows:

1) Permits issued by other agencies.
2) Change Orders (including Plans and Specifications attached thereto).
3) Public Works Agreement
4) Addenda
5) Special and General Provisions
6) Plans
7) City Standard Plans
8) Other Standard Plans
9) Standard Specifications for Public Works Construction
10) Reference Specifications

With reference to the Plans/Drawings, the order of precedence is as follows:

1) Change Order plans govern over Addenda and Contract plans
2) Addenda plans govern over Contract plans
3) Contract plans govern over standard plans
4) Detail plans govern over general plans
5) Figures govern over scaled dimensions

Within the Specifications, the order of precedence is as follows:

1) Change Orders
2) Permits from other agencies/Supplemental Agreements
3) Special Provisions
4) Instruction to Bidders
5) Referenced Standard Plans
6) Referenced Standard Specifications

If the Contractor, in the course of the Work, becomes aware of any claimed errors or omissions

in the Contract Documents or in the CITY's fieldwork, the Contractor shall immediately inform the Engineer. The Engineer shall promptly review the matter, and if the Engineer finds an error or omission has been made the Engineer shall determine the corrective actions and advise the Contractor accordingly. If the corrective work associated with an error or omission increases or decreases the amount of work called for in the Contract, the CITY shall issue an appropriate Change Order in accordance with 3-3. After discovery of an error or omission by the Contractor, any related work performed by the Contractor shall be done at the Contractor's risk unless authorized by the Engineer.

2-5.3 Submittals

2-5.3.2 Working Drawings. Add the following:

The following shop drawings are required:

1) Pump installation details showing existing pump station. Include all pump performance data.
2) Pump control system including interface with telemetric system.
3) Switchboard.
4) Motor control center.
5) Bio-Filter media and stainless steel frames

2-5.3.4 Supporting Information. Replace the second paragraph with the following:

Submittals are required for the following:

1) Construction schedule per 6-1.
2) List of subcontractors per 2-3.2
3) List of materials per 4-1.4
4) Certifications per 4-1.5
5) Confined space entry program per 7-10.4.4
6) Concrete mix designs per 201-1.1
7) Asphalt concrete Job mix formulas and/or mix designs per 203-6.
8) Crushed Miscellaneous Base
9) Traffic Control Plans per 7-10.3 prepared, signed, and sealed by a Civil Engineer registered in the State of California.
10) Ductile iron pipe, fittings and appurtenances
11) Dust Control Plan
12) Jobsite Safety Plan
13) All necessary data and details including, but not limited to, catalog sheets, manufacturer's brochures, technical bulletins, specifications, diagrams, product sample and testing reports for any material, product, or work requiring Engineers approval by the specification.
14) Operation and maintenance manuals for all equipment
15) Manufacturer's parts catalog showing part numbers for procurement of replacement parts.
16) Electrical and mechanical components and systems
17) All written manufacturer's warranties
18) Pump operation control schematic
19) Pump performance curves per 306-1.1.9
20) Pump manufacturer's technical data including station capacities and operating characteristics per 306-1.1.9

21) Spill Prevention and Emergency Response Plan per 7-8.5.3
22) Reinforcement steel
23) Amie Basin by-pass/dewatering plan per 306-1.1.8

In addition to the above, submittals may be required for any product, manufactured item, or system not specifically listed above.

2-6 WORK TO BE DONE. Add the following:

The Work generally consists of the construction of installing pumps at existing pump station, piping modification, new electrical service including coordinating with Southern California Edison, new switchboard, new motor control center, pump control system and miscellaneous sitework including paving, fencing and gates.

The Cost of all work necessary for the completion of a particular item shall be included in the price bid for the item unless the work is specifically included in another item. **In addition, the price bid for the project shall include all costs to construct the project in accordance with the Plans and Specifications. If there is no bid item for a particular item of work, full compensation for such work shall be considered as included in the prices bid for other related items of work.**

2-10 AUTHORITY OF THE BOARD AND THE ENGINEER. Add the following:

Failure of the Contractor to comply with the requirements of the Contract Documents, or to follow the directions of the Engineer, and/or to immediately remedy such noncompliance or to follow directions, may, upon notice from the Engineer, result in the suspension of the Contract monthly progress payments. Any monthly progress payments so suspended may remain in suspension until the Contractor is in compliance with the Contract Documents and the directions of the Engineer, as determined by the Engineer.

2-11 INSPECTION. Replace the entire subsection with the following:

The Work is subject to inspection and approval by the Engineer. The Contractor shall notify the Engineer a minimum of 48 hours in advance of the required inspection.

The Engineer will make, or have made, such inspections and tests as he deems necessary to see that the Work is in conformance with the Contract Documents. In the event such inspections or tests reveal noncompliance with the Contract Documents, the Contractor shall bear the cost of such corrective measures as deemed necessary by the Engineer, as well as the cost of subsequent re-inspection and re-testing.

Work done in the absence of inspection by the Engineer may be required to be removed and replaced under the inspection of the Engineer, and the entire cost of removal and replacement, including the cost of all materials which may be furnished by the CITY and used in the work thus removed, shall be borne by the Contractor, regardless of whether the work removed is found to be defective or not. Work covered without the approval of the Engineer shall, if so directed by the Engineer, be uncovered to the extent required by the Engineer, and the Contractor shall similarly bear the entire cost of performing all the work and furnishing all the materials necessary for the removal of the covering and its subsequent replacement, including all costs for additional inspection.

The Engineer and any authorized representatives shall at all times have access to the Work during its construction at shops and yards as well as the Work site. The Contractor shall provide every reasonable facility for ascertaining that the materials and workmanship are in accordance with the Contract Documents.

Inspection of the Work shall not relieve the Contractor of the obligation to fulfill all conditions of the Contract.

Add the following subsections:

2-11.1 Special Inspection Fees. If the Contractor elects to work under this Contract more than 8 hours/day or more than 40 hours/week, Saturday, Sunday, or CITY holidays, the Contractor shall arrange with the Engineer for the required inspection service and pay the Special Inspection Fees which will be charged at the following rates:

Mondays through Fridays	-	$135.00 per hour
Saturdays, Sundays, Holidays	-	$1,200.00 per day

Fees may be deducted from payments due to the Contractor at the discretion of the Engineer.

If the Contractor works under this contract at times other than within the allowed working hours <u>without permission from or prior arrangement with the Engineer</u>, the Contractor will be charged a lump sum amount of $500.00 for each occurrence, in addition to the above fees. The amount will be deducted from a Progress Payment.

2-11.2 General Requirements. The Contractor shall comply with the following requirements:

1) No excavation or open trench may be backfilled without first securing Health Department approval. If any piping, reclaimed or potable, is installed prior to plan check approval and/or inspection, all or any portion of the system may be required to be exposed and corrected as necessary.

2) Unused or abandoned potable water lines are to be severed as close to water mains as practical, capped, and a 10-foot section of abandoned line removed and cemented under Health Department supervision.

3) A dye or pressure test must be utilized to confirm the physical separation of the reclaimed and potable water system. Said testing shall be performed in conjunction with the Water Department and the Health Department and conducted before the introduction of reclaimed water.

2-11.3 Inspections During Construction. During the construction, the Contractor shall make the Work site available for periodic inspections by the regulatory agencies. These agencies may include: Los Angeles County Department of Health Services, Los Angeles Regional Water Quality Control Board, the State Water Resources Control Board, Division of Drinking Water and CITY Water Department.

2-11.4 Material Inspection/Testing and other City Expenses.

(a) If a City subcontractor hired to perform material inspection and/or testing is required to work additional time to perform inspection and testing as a result of an action or delay caused by the Contractor, except for specific work allowed by the Engineer, the City subcontractor may charge the City an additional fee. The Engineer may deduct the additional fee for said inspection and testing from a Progress Payment to the Contractor. The Engineer also may deduct the cost to perform additional testing when an initial test fails to meet the requirements of this Contract. The typical rates for material testing and inspection are available upon request from the Public Works Department.

(b) If the Contractor does not comply with a requirement of these Special Provisions or if it does not immediately respond, after being informed, to a request by the Engineer to amend a site condition that jeopardizes the public health, safety or welfare, the Engineer may direct City staff to perform the work. For each occurrence, the City will charge the Contractor a base charge in the amount of $750 in addition to all costs incurred by the City for administration, labor, equipment and materials. The standard rates for City staff are available upon request from the Public Works Department.

(c) For each sign, drum, delineator, cone, barricade, warning device, or other type of required traffic control device that is not provided and/or replaced by the Contractor when required by the Traffic Control Plans and/or directed by the Engineer, the Engineer may deduct $75 per day for each missing device from a Progress Payment.

(d) Temporary lane closures maintained prior to 8:30 A.M. and/or after 3:30 P.M. may have a negative economic effect on the local residential, commercial or industrial community. Unless a temporary lane closure is otherwise authorized, the Engineer may deduct a fee from a Progress Payment for each temporary lane closure maintained prior to 8:30 A.M. or after 3:30 P.M. The fee will be assessed at a rate of $700 per each travel lane per each thirty (30) minute interval, or fraction thereof.

SECTION 3 – CHANGES IN WORK

3-2 CHANGES INITIATED BY THE AGENCY

Section 3-2.2.1 General. Delete this subsection in its entirety. Add the following:

The City reserves the right to increase or decrease any bid item quantity, as necessary, to meet the City's needs and/or the project and/or budget requirements. If the City increases or decreases any bid item quantity by more than 25% of the original contract quantity, either the City or the Contractor may initiate discussions and/or negotiations regarding a potential adjustment to the contract unit bid price.

Section 3-2.2.2. Increases of More Than 25%. Delete this subsection in its entirety.

Section 3-2.2.3. Decreases of More Than 25%. Delete this subsection in its entirety.

3-3 EXTRA WORK

3-3.1 General. Add the following:

Payment for additional work and all expenditures in excess of the Contract Price must be authorized in writing by the Engineer. Such authorization shall be obtained by the Contractor prior to engaging in additional work. It shall be the Contractor's sole responsibility to obtain written approval from the Engineer for any change(s) in material or in the work proposed by suppliers or subcontractors. No payment shall be made to the Contractor for additional work which has not been approved in writing, and the Contractor hereby agrees that it shall have no right to additional compensation for any work not so authorized.

The Contractor shall be responsible to provide all data and to obtain all approvals required by the Specifications, including submittal of Daily Extra Work Reports. No claims or extras shall be approved by the Engineer unless all work was done under the direction of and subject to the approval of the Engineer. Disputed work claims shall comply with 3-3 as modified herein.

3-3.2.2 Basis for Establishing Costs.

3-3.2.2.3 Tool and Equipment Rental. Replace the second paragraph of with the following:

The Contractor will be paid for the use of equipment at the lower of the actual rental rates paid by the Contractor or the rental rates listed for such equipment in either the "Rental Rate Blue Book" published by Dataquest, Inc., 1290 Ridder Park Drive, San Jose, California 95131; telephone (408) 971-9000 or the California Department of Transportation publication entitled "Labor Surcharge and Equipment Rental Rates" available at the Caltrans web site, http://www.dot.ca.gov/hq/construc/equipmnt.html , which is in effect on the date upon which the work is accomplished, and that hereby is made a part of the Contract, regardless of ownership or any rental or other agreement, if such may exist, for the use of such equipment entered into by the Contractor. If it is deemed necessary by the Engineer to use equipment not listed in the said publication, a suitable rental rate will be established by the Engineer. The Contractor may furnish any cost data that might assist the Engineer in the establishment of such rental rate.

3-3.2.3 Markup. Add the following:

The markups mentioned hereinafter shall include, but are not limited to, all costs for the services of superintendents, project managers, timekeepers and other personnel not working directly on the change order, and pickup or yard trucks used by the above personnel. These costs shall not be reported as labor or equipment elsewhere except when actually performing work directly on the change order and then shall only be reported at the labor classification of the work performed.

3-3.2.3.1 Work by Contractor. Replace the entire subsection with the following:

The following percentages shall be added to the Contractor's costs and shall constitute the mark-up for all overhead and profit, which shall be deemed to include all items of expense not specifically designated as cost or equipment rental in Subsections 3-3.2.2.1, 3-3.2.2.2, and 3-3.2.2.3.

Labor	20
Materials	15
Equipment Rental	15
Other Expenditures	15

To the sum of the costs and markups provided for in this subsection, one (1) percent shall be added as compensation for bonding.

3-3.2.3.2 Work by Subcontractor. Replace the entire subsection with the following:

When any part of the extra work is performed by a subcontractor, the markup established in 3-3.2.3.1 shall be applied to the subcontractor's actual cost of such work. A markup of ten (10) percent on the first $5,000 of the subcontracted portion of the extra work and a mark-up of 5 percent on work added in excess of $5,000 of the subcontracted portion of the extra work may be added by the Contractor.

The markups specified in the two subsections above shall be considered as including, but not limited to, the Contractor's labor costs for personnel not working directly on the extra work, including the cost of any tools and equipment that they may use. Such costs shall not be reported as labor or equipment costs elsewhere except when they are actually used in the performance of the extra work. Labor costs shall in that case be reported for the labor classification corresponding to the type and nature of extra work performed.

3-4 CHANGED CONDITIONS.

Add the following:

This subsection does not apply to utilities.

SECTION 4 – CONTROL OF MATERIALS

4-1 MATERIALS AND WORKMANSHIP.

4-1.1 General.

Add the following paragraph after the second paragraph:

If the work, or any portion thereof, shall be damaged in any way, or if any defective materials or faulty workmanship shall be discovered at any time prior to the final payment, the Contractor shall forthwith, at its own cost and expense, repair said damage, or replace such defective materials, or remedy such faulty workmanship in a manner satisfactory to the Engineer.

4-1.2 Protection of Work and Materials. Add the following:

The Contractor shall assume all risks and expense of interference and delay in his operations, and the protection from or the repair of damage to improvements being built under the contract, as may be caused by water of whatever quantity from floods, storms, industrial waste, irrigation, underground or other sources. However, the Contractor shall be entitled to an extension of time in accordance with the provisions of Subsection 6-6. The Contractor shall also assume full responsibility and expense of protecting, or removing and returning to the site of Work, all equipment or materials under his care endangered by any action of the elements.

Furthermore, the Contractor shall indemnify and hold the City harmless from all claims or suits for damages arising from his operations in dewatering the Work and control of water.

SECTION 5 – UTILITIES

5-1 LOCATION. Add the following:

The Contractor shall provide coordination with all the utility companies involved and shall provide protection from damage to their facilities. The Contractor shall be responsible for repair or replacement to said facilities made necessary by its failure to provide required protection. The Contractor is required to include utility requirements in the Construction Schedule per Section 6-1.

The Contractor shall utilize the services of "Underground Service Alert-Southern California" for utility locating in all public right-of-ways by calling 1-800-227-2600 at least 48 hours prior to any excavation.

The new piping shall go over or under the existing utilities as indicated on the plans. Where not indicated, the Contractor shall assume that the new piping will cross <u>under</u> the existing utility. The Contractor shall pothole existing utilities as shown on the plans, as directed by the Engineer or as deemed necessary by the Contractor. The cost of potholing herein specified shall be included in the prices paid for other items of work and no additional compensation will be allowed.

Where water lines exist, at each angle point, cross connection and "T" connection, the Contractor, for bidding purposes, shall assume the existence of a concrete thrust block located such as to resolve thrust loads. Any and all costs resulting from the existence of a thrust block, including costs for its removal and restoration if required, shall be deemed as being included in the prices bid for the various items of work.

Underground lines that are potentially hazardous such as oil company lines, natural gas mains, and electrical conduits will be carefully located by the owner as provided in the Standard Specifications. The Contractor shall take special precautions in determining the precise location and depth of these structures to insure that they will not be damaged by its operations.

Substitute the following for the last paragraph:

Prior to starting construction, the Contractor shall be responsible to determine the location and depth of all utilities which have been marked by the respective owners and which may affect or be affected by its operations. The Contractor also shall determine the location and depth of each service connection, whether or not marked. Full compensation for such work shall be considered as included in the prices bid for other items or work. If a utility which was marked or a service connection is found to interfere with the work after construction has commenced, the Contractor

shall be solely responsible for all costs of any delay and for any costs which could have been avoided if the Contractor had located the utility prior to start of construction.

5-2 PROTECTION. Add the following:

If, in the course of construction, the Contractor damages a sewer lateral or water lateral, the Contractor shall be responsible to completely expose said lateral from the main line to the point of connection at private property to verify integrity of all joints to the satisfaction of the Engineer. This shall not be considered to be extra work and no extra costs shall be allowed therefor.

Sewers, including lateral repairs, shall be constructed of Vitrified Clay Pipe, unless otherwise approved in writing by the Engineer.

Add the following after the final paragraph:

As noted in subsections 5-2.1, 5-2.2 and 5-2.3 utilities are classified and are to be handled in one of three ways by the Contractor in the course of performing the contract.

Add the following subsections:

5-2.1 Noninterfering Utilities

Utilities that are not abandoned by the owner and do not physically interfere with the permanent work in its final location shall be supported, protected and maintained in place by the Contractor, and the Contractor shall be solely responsible for any damage, loss or injury, or death resulting from his/her failure to do so and the Contractor shall indemnify and hold harmless the City from any and all such consequences. Noninterfering utilities may, with the permission of the owner and the Public Works Director, be relocated still farther from the permanent work in its final locations, but the Contractor shall not so consider, in submitting his bid, unless the relocation is shown on the plans.

5-2.2 Abandoned Utilities

Abandoned utilities are those portions of any utility which are no longer needed or desired by the owner and whose destruction is consented to by the owner and/or is permitted by notation on the plans. Abandoned utilities which physically interfere with the permanent work or with the construction thereof shall be removed by the Contractor and the Contractor shall be solely responsible for any damage, loss or injury, or death resulting from the removal and the Contractor shall indemnify and hold harmless the City from any and all such consequences.

5-2.3 Interfering Utilities

Any utility shall be deemed an interfering utility (1) which physically occupies any part of the space to be occupied by the permanent work in its final locations, or (2) whose length within the theoretical width of excavation for the permanent work exceeds five times the width of said theoretical excavation whether or not the utility physically interferes with the permanent work. Interfering utilities that are not abandoned by the owner shall be relocated so as not to interfere with the permanent work in its final location. Such relocation will be performed by the owner or the City unless otherwise shown on the plans.

The Contractor shall exercise caution to prevent damage to or movement of the utilities while constructing the permanent work along and adjacent to the utilities.

Should any manhole extend within a trench excavation, the Contractor shall choose one of the

following methods of construction and shall assume all responsibilities thereof:

(1) Support and maintain the manholes in place during the construction of the permanent work in open cut.

(2) Remove the shaft and maintain the base of the manhole in place until the backfill is placed and compacted; then reconstruct the manhole shaft.

(3) Use another method of construction which has been submitted to and approved by the Engineer. All costs for the work pertaining to the manholes that might be found to extend partially within the excavation limits or any protective measures required due to the proximity of the manholes and the permanent work at these locations shall be absorbed in the prices bid for the various items of work.

5-2.4 Protection of Underground Hazardous Utilities. This Subsection shall apply to projects where there are underground utilities within the Work area which may be potentially hazardous if damaged. A hazardous substance shall be defined as one having the potential for an immediate disaster such as, but not limited to, gasoline, electricity, fuel oil, butane, propane, natural gas, chlorine or other chemicals.

Abandoned or inoperative utilities designed to carry hazardous substances and unidentified or unknown utilities shall be considered hazardous until determined otherwise. Whenever the Contractor is directed by the Engineer to tap these lines, the Contractor shall provide personnel specialized in this work and payment therefore will be considered as extra work per 3-3 of these Special Provisions.

The Contractor shall comply with the following requirements when working around underground hazardous utilities:

1) The Contractor shall not trench or excavate within the area where a utility known to carry a hazardous substance exists until its location has been determined by excavation or other proven methods acceptable to the Engineer. The intervals between exploratory excavations or location points shall be sufficient to determine the exact location of the line. Unless otherwise directed by the Engineer, excavation for underground hazardous utilities shall be performed by the Contractor and paid for as specified per 5-1 of these Special Provisions.

2) If it is determined that the horizontal or vertical clearance between the utility known to carry hazardous substances and the construction limit is less than 300 mm (12 inches) (450mm (18 inches) if scarifying), the Contractor shall confer with its owner. Unless the owner elects to relocate the line or take it out of service, the Contractor shall not excavate until the line has been completely exposed within the limits of construction.

3) Once the physical location of the utility known to carry hazardous substances has been determined, the Contractor, in cooperation with and with the concurrence of the utility owner, shall determine how to protect and/or support the utility from damage before proceeding with the Work.

4) During all excavation and trenching operations, the Contractor shall exercise extreme caution and protect the utilities from damage.

5) The Contractor shall notify the Engineer, the public agency maintaining records for the jurisdiction in which the Project is located and the owner, if known, whenever previously

unidentified or unknown underground utilities are encountered so that the location can be accurately established and made a part of permanent substructure records.

Full compensation for protecting underground hazardous utilities as specified or noted on the Plans shall be considered as included in the prices bid for the various items of work.

5-3 REMOVAL.

Add the following:

It shall be the Contractor's responsibility irrespective of the notations on the plans to confirm or determine that a utility is to be abandoned before treating the same as an abandoned utility and shall assume all risks in so determining.

5-4 RELOCATION.

Add the following:

Fire hydrants shall be relocated by Contractor per City of Torrance Standard Plan T705 or T706 as directed by the Engineer.

Water meters shall be relocated by Contractor per City of Torrance Standard Plan T703 or T704 as directed by the Engineer.

Water valves shall be relocated by the Contractor per City of Torrance Standard Plan T712.

Substitute the following for the last paragraph:

For the purpose of these specifications, service connections shall be construed to mean all, or any portion of, the pipe, conduit, cable, or duct which connects a utility main distribution line to the meter of an individual user, and further, shall include the meter and such portions of said pipe, conduit, cable or duct on the user's side of the meter which affect the contract work or its prosecution.

The City will arrange for the alteration or permanent relocation of only such service connections, except sewer house connections and water laterals, that interfere with the permanent work in its final location and such alteration or permanent relocation will be performed by others at no expense to the Contractor. The Contractor shall be responsible for the alteration or permanent relocation of sewer connections and water laterals, unless otherwise approved by the Engineer.

In instances where the alteration or permanent relocation of interfering service connections can be avoided by encasing same in the slabs or walls of poured-in place concrete structures the Contractor shall, when directed by the Engineer, so encase such service connections, and any costs for such work shall be absorbed in the unit prices or included in the lump sum amounts bid for the various items of work.

Service connections which do not interfere with the project structures shall be maintained in place by the Contractor. The cost of such work shall be absorbed in the unit prices or included in the lump sum amounts bid for the various items of work.

5-5 DELAYS.

Substitute the following:

If the contractor while performing the contract discovers utility facilities not identified by the public agency in the contract plans or specifications, he shall immediately notify the City and utility in writing. The Contractor shall not be entitled to damage or additional payment, nor shall it be entitled to standby time for labor if a delay does occur. The Contractor also shall not be entitled to damage or additional payment for equipment not on the project during the occurrence of the event that caused the related delay. The Engineer will determine the extent of the delay attributable to such interferences, the affect of the delay on the project as a whole, and any commensurate extension of time.

Any failure of the City and/or utility company to accomplish relocations in a reasonable manner in light of the Contractor's operations (to the extent such operations would otherwise be feasible and in accordance with the contract and as disclosed to the City prior to the Contractor encountering any such utility) shall entitle the Contractor to an extension of contract time to the extent that, in the judgment of the Engineer, the Contractor's completion of the overall contract work has been delayed; however, the Contractor shall be entitled to no other remedy and, in submitting its bid, thereby waives such other remedies, if any, unless the relocation delay is the result of arbitrary, capricious or malicious conduct by the City.

SECTION 6 - PROSECUTION, PROGRESS AND ACCEPTANCE OF THE WORK

6-1 CONSTRUCTION SCHEDULE AND COMMENCEMENT OF WORK.

6-1.1 Construction Schedule. Replace the entire subsection with the following:

Within ten (10) working days after the date of the CITY's execution of the Contract, the Contractor shall submit a proposed construction schedule to the Engineer for approval. The schedule shall be in accordance with 6-1.3 and 6-1.4 and shall be in sufficient detail to show chronological relationship of all activities of the Work. These include, but are not limited to: estimated starting and completion dates of various activities, submittal of shop drawings to the Engineer for approval, procurement of materials and scheduling of equipment.

Prior to issuing the Notice to Proceed, the Engineer will schedule a Pre-Construction Meeting with the Contractor to review the proposed construction schedule and delivery dates, arrange utility coordination and clarify inspection procedures.

Prior to starting any Work, the Contractor may be required to attend a Community Meeting to be scheduled by the Engineer. The meeting, to be held in the evening, will address the residents' questions and concerns regarding the Work, what can be expected during construction and vehicular and pedestrian access that may be temporarily restricted during construction. Compensation for attending these meetings shall be considered a part of Mobilization or, when there is no bid item for Mobilization, shall be considered as part of the bid items of work for this contract.

Notwithstanding any other provisions of the Contract, the Contractor shall not be obligated to perform any work and the CITY shall not be obligated to accept or pay for any work performed by the Contractor prior to delivery of a Notice to Proceed. The CITY's knowledge of work being performed prior to delivery of the Notice to Proceed shall not obligate the CITY to accept or pay for such work. The Contractor shall provide all required Contract bonds and evidences of insurance prior to commencing work at the site.

6-1.2 Commencement of the Work. Delete the subsection in its entirety. Add the following subsections:

6-1.3 Criteria. The construction schedule shall conform to the following criteria:

1) The schedule shall be prepared using the latest version of Primavera, Microsoft Project or approved equal.

2) Work activities shall be based on the items of work per 2-6, and the following:

   a) Contract Unit Price items shall be subdivided into those portions to be constructed during each stage or phase of construction.

   b) Lump sum items shall be subdivided into those portions to be constructed during each stage or phase of construction.

4) Required submittals, working and shop drawings shall be included as activities.

5) The procurement of construction materials and equipment with long lead times for deliveries shall be included as activities.

6) Work to be performed by subcontractors shall be identified and shown as work activities.

7) Start and completion dates of each activity shall be illustrated.

8) Completion of all Work under the Contract shall be within the time specified in 6-7 of these Special Provisions and in accordance with the Plans and Specifications.

6-1.4 Requirements. In preparing the construction schedule, the following items shall be considered:

Sequence of Construction - The Contractor shall sequence the Work in a manner to expeditiously complete the project with a minimum of inconvenience to the adjacent owners and to conform to the following:

1. **The Contractor may not begin any pavement reconstruction activities until it has completed the installation of all new PCC improvements for the entire project.**

2. Concrete removal - All concrete removed shall be hauled off the Work site (including the Contractor's storage yard) no later than the calendar day following the day that the removal is performed. If the calendar day following the removal is a non-working day (Saturday, etc.) the concrete shall be hauled off the Work site on the same day it was removed. Unless otherwise authorized by the Engineer, failure by the Contractor to haul concrete from the Work site and/or Contractor's storage yard(s) in a timely manner may result in a liquidated damage assessed upon the Contractor. Such liquidated damage shall be determined by the Engineer and will be deducted, accordingly, from a Progress Payment due to the Contractor.

3. PCC construction - Construction of PCC sidewalks, driveways, access ramps, curbs, gutters and cross gutters shall be formed and poured within 5 working days following removal of the existing material at any location. Any adjacent trench (i.e. 1-foot wide slot trench), required to remove and construct said PCC construction shall be restored per these Specifications and no later than 2 calendar days following the PCC construction. Failure by the Contractor to comply with these requirements in a timely manner may

result in a liquidated damage assessed upon the Contractor. Such liquidated damage shall be determined by the Engineer and will be deducted, accordingly, from a Progress Payment due to the Contractor.

4. Pavement removal - All pavement removed as a result of trenching shall be hauled off the Work site no later than the same day that the removal is performed.

6-1.5 Updates. The Contractor shall submit 2 paper copies of the updated construction schedule to the Engineer on the first working day of each month.

If the Contractor decides to make a major change in the method of operations after commencing construction, or if the schedule fails to reflect the actual progress, the Contractor shall submit to the Engineer a revised construction schedule in advance of beginning revised operations.

Full compensation for complying with all requirements of Section 6-1.5 Updates shall be per the Contract Unit Price for CONSTRUCTION SCHEDULE. If the Contractor fails to submit an updated Construction Schedule to the Engineer on the first working day of each month, the CITY will deduct one-fifth the amount of the Contract Unit Price for each work day after the due date, up to maximum of $300, that each monthly schedule update is not submitted.

6-7 TIME OF COMPLETION.

6-7.1 General. Replace the first sentence with the following:

Time shall be of the essence in the Contract. The Contractor shall begin Work after the mailing by the Engineer to the Contractor, first class mail, postage prepaid, a Notice to Proceed and shall diligently prosecute the same to completion within ***188*** working days from the start date specified in the Notice to Proceed.

6-8 COMPLETION, ACCEPTANCE AND WARRANTY.

6-8.1 Completion. Replace the entire subsection with the following:

If, in the Engineer's judgment, the Work has been completed and is ready for acceptance, the Engineer will so certify and will determine the date when the Work was completed. This will be the date when the Contractor is relieved from responsibility to protect the Work. The Engineer may cause a Notice of Completion to be filed and recorded with the Los Angeles County Recorder's Office. At the Engineer's option, the Engineer may certify acceptance to the City Council who may then cause a Notice of Completion to be filed and recorded with the Los Angeles County Recorder's Office.

6-8.3 Warranty. Add the following subsection:

6-8.3.1 Manufacturer's Warranties. Manufacturer's warranties shall not relieve the Contractor of liability under these Specifications. Such warranties only shall supplement the Contractor's responsibility. The Engineer may, at his option, require a manufacturer's warranty on any product offered for use.

6-9 LIQUIDATED DAMAGES. In each of the two paragraphs, substitute "$***1,000*** in place of "$250" as the amount of the liquidated damages per each consecutive calendar day.

Add the following section:

6-11 SEQUENCE OF CONSTRUCTION

In accordance with the Contractor's approved schedule.

SECTION 7 - RESPONSIBILITIES OF THE CONTRACTOR

7-2 LABOR

7-2.3 Payroll Records. Add the following:

Any payroll and payroll records required for this project shall be submitted, for each week in which any contract work is performed, to the Engineer. A retention of $5,000 per report per pay period will be withheld from a progress payment for a late or missing report. A report shall be deemed as late or missing when not submitted to the Engineer within 10 calendar days from the close of the pay period for which the report applies. In addition, a non-refundable deduction of $100 per report per day will be deducted from payments due the Contractor for each late or missing report. The $100 non-refundable deduction per day will be incurred beginning on the first day the report is late or missing.

Add the following subsections:

7-2.5 Subcontractor and DBE Records

At the completion of the contract if the Contractor does not submit its Subcontractor and DBE Records to the Engineer a retention in the amount of $10,000 per record will be withheld from a progress payment for a late or missing record. A record shall be deemed as late or missing when not submitted to the Engineer within 15 calendar days from the completion of the contract. In addition, a non-refundable deduction of $300 per record per day will be deducted from payments due the Contractor for each late or missing record. The $300 non-refundable deduction per day will be incurred beginning on the first day the record is late or missing.

7-2.6 Department of Industrial Relations' monitoring and enforcement of prevailing wage laws

California Labor Code:

1771.1. (a) A contractor or subcontractor shall not be qualified to bid on, be listed in a bid proposal, subject to the requirements of Section 4104 of the Public Contract Code, or engage in the performance of any contract for public work, as defined in this chapter, unless currently registered and qualified to perform public work pursuant to Section 1725.5. It is not a violation of this section for an unregistered contractor to submit a bid that is authorized by Section 7029.1 of the Business and Professions Code or by Section 10164 or 20103.5 of the Public Contract Code, provided the contractor is registered to perform public work pursuant to Section 1725.5 at the time the contract is awarded.

SB 854 amended the Labor Code to require all contractors bidding on public work to register with the Department of Industrial Relations (DIR) and to pay an annual fee. The registration requires contractors to provide the State with evidence of the contractors' compliance with a number of statutory requirements. The registration requirement took effect on July 1, 2014 to fund the

Department of Industrial Relations' monitoring and enforcement of prevailing wage laws. The registration period is open now, and contractors and subcontractors wishing to work on a public works project must be registered by March 1, 2015. For public agencies/awarding bodies, the new law requires that all public works projects with bids due after March 1, 2015, or awarded on or after April 1, 2015, use only registered contractors and subcontractors. The bill also requires awarding bodies to include notice of the registration requirement in their bid invitations and bid documents. In addition, public agencies must also file notice of their public works projects using DIR approved forms.

Registration is completed through an online application and requires a non-refundable $300 fee to be paid by the contractors and subcontractors. The registration process requires contractors to:

- provide workers' compensation coverage to its employees
- hold a valid Contractors State License Board license
- have no delinquent unpaid wage or penalty assessments
- not be subject to federal or state debarment

Contractors must pay an annual renewal fee by July 1 of each year. The registration form is located on the DIR's website at http://www.dir.ca.gov/DLSE/dlsepublicworks.html.

To help awarding bodies and contractors comply with the new requirements, the DIR will post a database of registered contractors and subcontractors on its website. While non-registered contractors may not be awarded public works contracts after the effective date, inadvertently listing an unregistered subcontractor on a bid will not necessarily invalidate that bid. In addition, the registration requirement does not apply to private jobs that are determined to be public works after the contract has been awarded.

The City is required to provide notice of award to the DIR on all projects. Said notice is by an online application and within five (5) days of project award. The online application is at: https://www.dir.ca.gov/pwc100ext/

7-3 INSURANCE.

7-3.2 General Liability Insurance. Replace the second sentence of the second paragraph with the following:

The Contractor must maintain at its sole expense the following insurance, which will be full coverage not subject to self-insurance provisions:

1) Automobile Liability, including owned, non-owned and hired vehicles, with at least the following limits of liability:

   a). Combined single limits of $2,000,000 per occurrence.

2) General Liability including coverage for premises, products and completed operations, independent contractors, personal injury and contractual obligations with combined single limits of coverage of at least $3,000,000 per occurrence, with an annual aggregate of no less than $5,000,000.

Add the following:

The Contractor must include all subcontractors as insureds under its policies or must furnish separate certificates and endorsements for each subcontractor.

7-3.3 Worker's Compensation Insurance. Add the following after the fourth paragraph:

Worker's Compensation Insurance shall be with limits as required by the State of California and Employer's Liability with limits of at least $1,000,000.

7-3.4 Auto Liability Insurance Delete subsection in its entirety.

7-5 PERMITS. Replace the second paragraph with the following:

The Contractor shall obtain a City of Torrance Business License and a no-fee Construction Excavation Permit before commencing construction. The Contractor shall obtain Statewide NPDES Construction Permit before commencing construction. The Contractor shall obtain no-fee Electrical and Plumbing permits from the Building and Safety Department before commencing installation of new electrical services or on-site irrigation systems, as applicable.

Full compensation for complying with the above requirements shall be considered as included in the prices bid for the appropriate items of work.

7-6 THE CONTRACTOR'S REPRESENTATIVE

Add a third paragraph to the section stating the following:

The Contractor's Representative shall be approved by the CITY prior to the start of the Work. If the designated representative is rejected, the Contractor shall immediately designate another representative in writing and submit to the City for consideration. The CITY shall have the authority to require the Contractor to remove its representative and/or alternate representative at any time and at no cost to the CITY.

7-8 WORK SITE MAINTENANCE.

7-8.1 General. The second paragraph is amended to read:

Unless directed otherwise by the Engineer, the Contractor shall furnish and operate a self-loading motor sweeper with spray nozzles at least once each working day to keep paved areas acceptably clean to the City whenever construction, including restoration, is incomplete.

7-8.6.2 Best Management Practices (BMPs). Replace the entire subsection with the following:

Best Management Practices shall be defined as any program, technology, process, siting criteria, operating method, measure, or device which controls, prevents, removes, or reduces pollution. The Contractor shall obtain and refer to the California Stormwater Quality Association's: Stormwater Best Management Practice Handbook Portal: Construction. The publication is available from CASQA.

The Contractor shall have a minimum of two (2) readily accessible copies of each publication on the Work site at all times. The Contractor shall implement BMPs in conjunction with the following construction operation and activities:

CONSTRUCTION PRACTICES	Clearing, Grading and Excavating
	Water Conservation Practices

	Dewatering
	Paving Operations
	Structure Construction and Painting
MATERIAL MANAGEMENT	Material Delivery and Storage
	Material Use
	Spill Prevention and Control
WASTE MANAGEMENT	Solid Waste Management
	Hazardous Waste Management
	Contaminated Soil Management
	Concrete Waste Management
	Sanitary/Septic Waste Management
VEHICLE AND EQUIPMENT MANAGEMENT	Vehicle and Equipment Cleaning
	Vehicle and Equipment Fueling
	Vehicle and Equipment Maintenance

The Contractor shall implement the following BMPs in conjunction with the previously listed construction operation activities:

VEGETATIVE STABILIZATION	Scheduling of Planting
	Preservation of Existing Vegetation
	Temporary Seeding and Planting
	Mulching
PHYSICAL STABILIZATION	Geotextiles and Mats
	Soil Stabilizer/Dust Control
	Temporary Stream Crossing
	Stabilized Construction Roadway
	Stabilized Construction Entrance
RUNOFF DIVERSION	Sodding, Grass Plugging, and Vegetative Buffer strips
	Earth Dikes, Drainage Swales, and Lined Ditches
	Top and Toe of Slope Diversion Ditches/Berms
	Slope Drains and Subsurface Drains

VELOCITY REDUCTION	Flared Culvert End Sections
	Outlet Prottection/Velocity Dissipation Devices
	Check Dams
	Slope Roughening/Terracing/Rounding
SEDIMENT TRAPPING	Slit Fences
	Straw Bale Barrier
	Sand Bag Barrier
	Brush or Rock Filter
	Storm Drain Inlet Protection
	Sediment Traps
	Sediment Basin

Additional BMPs may be required as a result of a change in actual field conditions, contractor activities, or construction operations. When more than one BMP is listed under each specific BMP category, the Contractor shall select the appropriate and necessary number of BMPs within each category in order to achieve the BMP objective.

BMPs for contractor activities shall be continuously implemented throughout the year. BMPs for erosion control and sedimentation shall be implemented during the period from October 15 to April 15, and whenever the National Weather Service predicts rain within 24 hours. BMPs for erosion control and sedimentation shall also be implemented prior to the commencement of any contractor activity or construction operation that may produce run-off, and whenever run-off from other sources may occur.

The CITY, as a permittee, is subject to enforcement actions by the State Water Resources Control Board, the Environmental Protection Agency and private citizens. The CITY may assess the Contractor a penalty of $1,000 for each calendar day that the Contractor has not fully implemented the appropriate BMPs and/or is otherwise in noncompliance with these provisions. In addition, the CITY will deduct, from the final payment due the Contractor, the total amount of any fines levied on the CITY, plus legal and staff costs, as a result of the Contractor's lack of compliance with these provisions and/or less than complete implementation of the appropriate BMPs.

Full compensation for the implementation of BMPs, including the construction, removal, and the furnishing of all necessary labor, equipment, and materials, shall be considered as included in the price bid for NPDES COMPLIANCE.

7-8.6.5 Payment. Delete this subsection in its entirety.

Add the following subsections:

7-8.7 Temporary Light, Power, and Water. Add the following:

The Contractor shall furnish, install, maintain, and remove all temporary light, power, and water at its own expense. These include piping, wiring, lamps and other equipment necessary for the Work. The Contractor shall not draw water from any fire hydrant (except to extinguish a fire), without obtaining permission from the water agency concerned.

The Contractor shall obtain a construction water meter from the CITY by calling City of Torrance Billing at 855-354-5623. Refer to the Hydrant Meter application in Appendix I of this document. A $1,500 deposit is required and refundable upon return of the meter in good working condition. The Contractor shall pay for the water used, at the CITY's current water rates.

Some water mains in Torrance are owned/operated by California Water Service. For rental of a hydrant meter the contractor shall call California Water Service at (310) 257-1400.

7-8.9 Graffiti Removal. The Contractor shall maintain the Work, all of its equipment, and all traffic control devices, including signage, free of graffiti throughout the duration of the Contract. The Contractor shall respond to any request from the Engineer to remove graffiti within 4 hours of notification. Should the Contractor fail to respond to such request, the CITY reserves the right to make other arrangements for the requested graffiti removal and deduct the cost from any monies due the Contractor.

7-9 PROTECTION AND RESTORATION OF EXISTING IMPROVEMENTS.

Add the following paragraphs:

The Contractor shall be responsible to protect all new concrete work from being etched, scratched or otherwise marked or having wet slough material deposited thereon. If new concrete work is marked, the Contractor shall replace it at its expense in accordance with 303-5.7 of these special provisions.

7-10 PUBLIC CONVENIENCE AND SAFETY

7-10.1 Access.

7-10.1.2 Vehicular Access Replace the entire subsection with the following

The Contractor's operations shall cause no unnecessary inconvenience. The access rights for the public shall be considered at all times.

Safe and adequate vehicular access shall be provided and maintained to: fire hydrants; commercial and industrial establishments; churches, schools and parking lots; service stations and motels; hospitals; police and fire stations; and establishment of similar nature. Access to these facilities shall be continuous and unobstructed unless otherwise approved by the Engineer.

Add the following subsections:

7-10.2.4 Minimum Requirements for Maintaining Traffic Flow. The Contractor shall observe the following minimum requirements:

a) Unless otherwise shown on the Traffic Control Plans, permitted by this Contract or authorized by the Engineer, all roadways, driveways, travel and turning lanes, sidewalks and access ramps shall remain open at all times.

b) At a minimum, the Contractor shall maintain one (1) ten (10) foot-wide lane open in each direction between the hours of 7:00 a.m. and 3:30 p.m. All travel lanes shall be kept open all other times.

c) Any travel lane adjacent to the curb and within the work zone shall be, at a minimum, a twelve (12) foot-wide lane.

d) Reduction in lane requirements may be afforded only with prior written approval from the Engineer.

e) Traffic signs, flaggers, warning devices, safety traffic devices and, on select streets, electronic arrow boards for diverting and directing traffic shall be furnished, installed and maintained by the Contractor throughout the project.

f) The Contractor must provide access through the work zone in non-working hours by means of temporary ramps. Open trenches shall either be covered by steel plates, or ramped with crushed miscellaneous base. No drop-off at either transverse or longitudinal joints shall be allowed at any time. Temporary ramps, including those for driveway access, shall be constructed with either crushed miscellaneous base or temporary asphalt, as appropriate, with a minimum of 1" to 12" slope in both longitudinal and transverse directions.

All costs for the above requirements shall be included in the Contract Unit Price for Traffic Control.

7-10.2.9 Refuse Collection. Refuse collection days are established and will not be changed. Consult the Engineer regarding the refuse collection schedule. The Contractor shall ensure streets and alleys affected by the work are accessible to the CITY's automated trash trucks on designated pick up days. In alleys, Contractor shall be responsible to provide and maintain access to large trash containers during the course of the work.

7-10.2.10 Protection of Permanent Pavement Markings, Manholes, Valves. The Contractor shall, in areas outside of the work zone, protect existing raised pavement markers, thermoplastic legends and markings. The Contractor shall cover and protect existing valve and manhole covers, utility caps, and similar items from damage. Prior to the application of the slurry seal or cape seal the Contractor shall remove by method of wet sandblasting any existing thermoplastic or painted pavement legend or marking within the limits of work.

The contractor shall be responsible for replacing or restoring any damaged items to the satisfaction of the Engineer.

Full compensation for the items in this subsection shall be considered as included in the Contract.

7-10.5.3 Steel Plate Covers. Replace the entire subsection with the following:

When backfilling operations of an excavation in the traveled way, whether transverse or longitudinal cannot be properly complete within a work day, steel plate bridging with a non-skid surface and shoring may be required to preserve unobstructed traffic flow. In such cases, the following conditions shall apply:

1. Steel plate used for bridging shall extend a minimum of 12-inches beyond the edges of the trench.

2. Steel plate bridging shall be installed to operate with minimum noise.

3. The trench shall be adequately shored to support the bridging and traffic loads

4. Temporary paving with cold asphalt concrete shall be used to feather the edges of the plates, if plate installation by Method (2) described below, is used.

5. Bridging shall be secured against displacement by using adjustable cleats, shims, or other devices.

Add the following section:

7-15 PROJECT CONSTRUCTION SIGNS.

The Contractor shall remove existing sign and furnish and install one Project Construction Signs at locations to be determined by the Engineer.

Full compensation for furnishing, installing, maintaining and removing signs shall be per unit per the Contract Unit Price.

SECTION 9 - MEASUREMENT AND PAYMENT

9-1 MEASUREMENT OF QUANTITIES FOR UNIT PRICE WORK.

9-1.2 Methods of Measurement. Add the following subsections:

9-1.2.1 Payment for Labor and Materials.

The Contractor shall pay and cause the subcontractors to pay any and all accounts for labor, including Worker's Compensation premiums, State Unemployment and Federal Social Security payments and all other wage and salary deductions required by law. The Contractor also shall pay and cause the subcontractors to pay any and all accounts for services, equipment and materials used by it and the subcontractors during the performance of work under this contract. All such accounts shall be paid as they become due and payable. If requested by the Engineer, the Contractor shall immediately furnish the City with proof of payment of such accounts.

9-1.2.2 Measurement and Payment

Payment of each item will include full compensation for furnishing all labor, materials, tools, equipment and backup equipment; transportation and technical competence for performing all work necessary to complete each item as indicated on the plans and as specified in these Contract Documents, including but not limited to obtaining all applicable certifications necessary for specialty personnel and major equipment in conformance with Subsection 7-5, and all other applicable permits; securing a storage yard to store all equipment and materials to be used on the job, disposal of waste materials, restoration of the site, etc. The storage yard may also be used as a temporary storage for excavated materials, and traffic control items. Costs for mobilization/demobilization shall be included in the unit price bid for MOBILIZATION.

9-2 LUMP SUM WORK. Replace the second paragraph with the following:

The Contractor shall, within five (5) working days of receipt of a request from the Engineer, submit a complete breakdown of lump sum bid prices showing the value assigned to each part of the work, including an allowance for profit and overhead. In submitting the breakdown, the Contractor certifies that it is not unbalanced and that the value assigned to each part of the work represents its estimate of the actual cost, including profit and overhead, of performing that part of the work. The breakdown shall be sufficiently detailed to permit its use by the Engineer as one of the bases for evaluating requests for payment. No extra costs shall be allowed for providing these breakdowns.

9-3 PAYMENT.

9-3.2 Partial and Final Payment. Replace the third paragraph with the following:

For each progress estimate, 5 percent will be deducted and retained by the CITY, and the remainder less the amount of all previous payments will be paid. In addition, 125% of the amount of unreleased "STOP" Notices will be withheld.

Add the following:

The Contractor shall submit all requests for payment on a Progress Payment Invoice.

Prior to submittal of said invoice, all items for which payment is requested shall be checked and approved in writing by the Engineer. No payments will be made unless all back-up data is submitted with the payment request and the Progress Payment Invoice is signed by both Contractor and

Engineer.

9-3.4 Mobilization. Replace the entire subsection with the following:

Mobilization shall include the provisions of the Construction Schedule, Best Management Practices and Storm Water Pollution Prevention Plan; Sewage Spillage Prevention; Emergency Response Plan; site review; obtaining all permits, insurance, and bonds; moving onto the site all plant and equipment; furnishing and erecting plants, temporary buildings, and other construction facilities, and removal of same at completion of the Work; and other work, all as required for the proper performance and completion of the Work.

Mobilization shall include, but not be limited to, the following items:

(a) Submittal and modification, as required, of the Construction Schedule.

(b) Moving on to the site of all Contractor's plant and equipment required for the first month's operations.

(c) Installing temporary construction power and wiring.

(d) Establishing fire protection system.

(e) Developing construction water supply.

(f) Providing on-site sanitary facilities and portable water facilities, as required.

(g) Arranging for and erection of Contractor's work and storage yard.

(h) Submittal of all required insurance certificates and bonds, including subcontractors.

(i) Obtaining and paying for all required permits.

(j) Posting all OSHA required notices and establishment of safety programs.

(k) Potholing and other research and review as necessary to verify site conditions and utility locations

(l) Having the Contractor's Superintendent present at the job site full-time.

(m) Removal (including all spray-painted markings on any surface), cleanup, and restoration

Add the following subsection:

9-3.5 Noncompliance with Plans and Specifications.

Failure of the Contractor to comply with any requirement of the Plans and Specifications, and/or to immediately remedy any such noncompliance upon notice from the Engineer, may result in suspension of Contract Progress Payments. Any Progress Payments so suspended shall remain in suspension until the Contractor's operations and/or submittals are brought into compliance to the satisfaction of the Engineer. No additional compensation shall be allowed as a result of suspension

of Progress Payments due to noncompliance with the plans or specifications. The Contractor shall not be permitted to stop work due to said suspension of Progress Payments.

Add the following section:

9-4 CLAIMS.

The Contractor shall not be entitled to the payment of any additional compensation for any cause, including any act, or failure to act, by the CITY, or the happening of any event, thing or occurrence, unless the Contractor shall have given the CITY due written notice of potential claim as hereinafter specified.

The written notice of potential claim shall set forth the reasons for which the Contractor believes additional compensation will or may be due, the nature of the costs involved, and, insofar as possible, the amount of the potential claim. Said notice shall be submitted on a form approved by the CITY at least forty-eight (48) hours (two working days) in advance of performing said work, unless the work is of an emergency nature, in which case the Contractor shall notify and obtain approval from the Engineer prior to commencing the work. The Engineer may require the Contractor to delay construction involving the claim, but no other work shall be delayed, and the Contractor shall not be allowed additional costs for any said delay but may be allowed an extension of time if the Engineer agrees that the work delayed is a controlling element of the Construction Schedule. The Contractor shall be required to submit any supporting data (or a detailed written explanation justifying further delay) within five (5) work days of a request from the Engineer and shall be responsible for all costs associated with any delays resulting from late and/or incomplete submittals. By submitting a Bid, the Contractor hereby agrees that this subsection shall supersede 6-6.3 and 6-6.4 of the Standard Specifications.

It is the intention of this subsection that differences between the parties arising under and by virtue of the Contract be brought to the attention of the Engineer at the earliest possible time in order that such matters may be settled, if possible, or other appropriate action promptly taken. The Contractor hereby agrees that it shall have no right to additional compensation for any claim that may be based on any such act, failure to act, event, thing or occurrence for which no written notice of potential claim as herein required was timely filed.

PART 2 - CONSTRUCTION MATERIALS

SECTION 200 – ROCK MATERIALS

200-2 UNTREATED BASE MATERIALS

200-2.1 General. Replace the entire subsection with the following:

Untreated base for pavement, curb, gutter, cross gutters, bus pads, hardscape and other improvements shall be either Crushed Aggregate Base conforming to 200-2.2 or Crushed Miscellaneous Base conforming to 200-2.4.

SECTION 203 – BITUMINOUS MATERIALS

203-5 SLURRY SEAL

203-5.4 Emulsion-Aggregate Slurry (EAS)

203-5.4.2 Materials.

203-5.4.2.2 Emulsified Asphalt Delete the first sentence of the first paragraph and replace with the following:

Emulsified asphalt shall be quick-set and contain 2.5% latex.

203-5.4.2.3 Water. Add the following:

Water shall be potable and compatible with the other ingredients of the slurry.

203-5.4.2.5 Set Control Agents Add the following:

The Retarder for quick-setting emulsion and the asphalt modifier shall be a type approved by the Engineer. The amount of retarder and asphalt modifier to be included in the quick-set slurry shall be that amount necessary to ensure that the applied slurry can support vehicular traffic within 60 minutes after the last application.

203-6 ASPHALT CONCRETE

203-6.1 General. Add the following:

Asphalt concrete shall be Type Class B-PG-64-10 R0.

SECTION 207 – PIPE

207-9 IRON PIPE AND FITTINGS.

207-9.2 Ductile Iron Pipe for Water and other Liquids.

207-9.2.1 General. Replace the last paragraph with the following:

Ductile iron pipe (DIP) shall comply with AWWA C150 and C151. Unless otherwise specified on the Plans or Specifications, the minimum pipe wall thickness shall be equal to Pressure Class 350.

207-9.2.2 Pipe Joints. Replace the entire subsection with the following:

Unless otherwise specified on the Plans or Specifications, all pipe joints shall be ductile iron and shall comply with the requirements of Table 207-9.2.2 (A) of these Special Provisions. Pipe joints shall be rated for a working pressure of 350 psi.

TABLE 207-9.2.2 (A)

Type of Joint	Specifications
Rubber Gasket Push-on Joint	AWWA C111
Mechanical Joint	AWWA C111
Flanged Joint	AWWA C153 or C110
Flanged Joint (Threaded Flanges)	AWWA C115

Gaskets shall be 1/8-inch thick and made of styrene butadiene rubber (SBR). Gaskets shall conform to AWWA C111 and 208-1.2. Flange gaskets shall be full-face, with bolt holes pre-punched and rated for 350 psi working pressure.

Flange assembly bolts shall be square head machine bolts conforming to ANSI/ASME B18.2.1 with heavy hexagon nuts conforming to ANSI/ASME B18.2.2. Bolts and nuts shall be threaded according to ANSI/ASME B1.1, course thread series, Class 2 fit. Bolt length shall be such that after joints are made up, the bolts shall protrude through the nut by no more than ½-inch. Bolts for use in buried installations shall be stainless steel Type 316. Bolts for use in submerged installations shall be stainless steel Type 304.

Add the following subsection:

207-9.2.2.1 Restrained Joints.

Restrained joints for piping 6 inches and larger shall be American Cast Iron Pipe Company "MJ Coupled Joint," "Lok-Ring" or "Flex-Ring," U.S. Pipe "TR-Flex," or equal. All weldments for restrained joints shall be tested by the liquid penetrant method per ASTM E 165.

Alternatively, restrained joints in 12-inch diameter and smaller buried piping shall be American Cast Iron Pipe Company "Fast-Grip," U.S. Pipe "Field-lok" gasket within Tyton joint pipe and fittings, or equal. Joint restraint shall be certified to four times rated pressure of 200 psi by Factory Mutual.

207-9.2.3 Fittings. Replace the entire subsection with the following:

Unless otherwise specified on the Plans and Specifications, all fittings shall be ductile iron and manufactured in accordance with AWWA C153 or C110. Fittings shall be furnished with restrained

joints or thrust blocked and anchored in accordance with City of Torrance Standard Plan No. T713. Fittings shall have a minimum pressure rating of 250 psi working pressure.

Sleeve-type couplings shall be MJ x MJ, 12-inches minimum length and rated 250 psi working pressure. Romac type sleeves may be used where approved by the Engineer.

Special fittings are not allowed without the prior written approval from the Engineer.

Rubber gaskets, bolts and nuts shall conform to 207-9.2.2 of these Special Provisions.

207-9.2.4 Lining and Coating. Add the following:

Cement for mortar lining shall be Type II or V. Fly ash or pozzolan shall not be used as a cement replacement.

Fittings lined and/or coated in the field will not be accepted as conforming to AWWA C104, C151, or C153.

The exterior surfaces of ductile iron pipe, fittings, valves and appurtenances that will be exposed to the atmosphere inside structure or above ground shall be thoroughly cleaned and painted with a rust-inhibitive primer conforming to the requirements of 210-1.8 of these Special Provisions.

207-9.2.6 Polyethylene Encasement for External Corrosion Protection. Replace the entire subsection with the following:

All ductile iron pipes, fittings, valves and appurtenances shall be wrapped with 8 mil. polyethylene film. The polyethylene film shall be pulled snugly around the pipes, fittings, valves and appurtenances and held in place with a 2-inch wide polyethylene adhesive tape in accordance with AWWA C105 Method A.

SECTION 210 – PAINT AND PROTECTIVE COATINGS

210-1 PAINT

Add the following subsection:

210-1.6 Paint for Traffic Striping, Pavement Marking, and Curb Marking

210-1.6.1. General.

All permanent striping and pavement markings shall be hot applied alkyd thermoplastic in accordance with the provisions of Section 84-2.02 of the Caltrans Standard Specifications.

Add the following subsections:

210-1.7 Test Reports and Certifications

At the time of delivery of each shipment of material, the Contractor shall, upon request, deliver to the Engineer certified copies of manufacturer's test report. The test report shall indicate the name of manufacturer, type of material, date of manufacture, quantity, State Specification number,

manufacturer's lot or batch number, and results of the required tests. The test report shall be signed by an authorized representative of the manufacturer. The certified test reports and the testing required in connection therewith shall be at no cost to the CITY.

210-1.8. Paint for Exterior Surfaces of Ductile Iron Pipe. The exterior surfaces of ductile iron pipe, fittings, valves and appurtenances that will be exposed to the atmosphere inside structure or above ground shall be painted with three coats of "Rustoleum No. 7773" or approved equal. The final coat color shall be selected by Engineer or identified on plans. Total thickness of coating shall be 6 mils.

210-1.9 Coating for Valves. Except as otherwise provided, all ferrous surfaces (excluding non-corrosive surfaces) in water passages of all valves 4-inches and larger shall be fuse coated with an epoxy coating in accordance with the "Standard for Protective Epoxy Interior Coatings for Valves and Hydrants" (AWWA C550).

210-1.10.1 Surface Preparation. Surface preparation shall conform to the following requirements:

Prime Coat: Self-curing, two-component inorganic zinc rich coating recommended by the manufacturer for overcoating with a epoxy finish coat. Minimum zinc content shall be 14 pounds per gallon. Apply to a thickness of 3 mils. Products: Tnemec N90E92, Porter 311 Zinc-Lock, Ameron Dimetcote 9, or approved equal.

Intermediate and Finish Coat: 100 percent solids, thermosetting or catalytic, fusion bonded, dry powder epoxy, suitable for the intended service as recommended by the manufacturer, Scotchkote 134 or approved equal.

Valves shall be coated on their interior metal surfaces excluding seating areas and bronze and stainless steel pieces. Sandblast surfaces in accordance with SSPC SP-5. Remove all protuberances, which may produce pinholes in the lining. Round all sharp edges to be coated. Remove any contaminants, which may prevent ponding of the lining. Coat the interior ferrous surfaces using one of the following methods:

1) Apply powdered thermosetting epoxy per the manufacturer's application recommendations to a thickness of 10 to 12 mils.

2) Apply two coats of catalytically setting epoxy (Keysite 740, Gilpon, or equal) to a dry film thickness of 10 to 12 mils total. Follow the paint manufacturer's application recommendations including minimum and maximum drying time between required coats.

All epoxy lining shall be fusion epoxy applied by the manufacturer. Coat interior surfaces of cast iron valves at the place of manufacturer. Do not coat seating areas and plastic, bronze, stainless steel, or other high alloy parts.

PART 3 - CONSTRUCTION METHODS

SECTION 300 – EARTHWORK

300-1 CLEARING AND GRUBBING.

300-1.3 Removal and Disposal of Materials.

300-1.3.1 General. Replace the entire subsection with the following:

Unless otherwise stated on the Plans or Specifications, all material removed from the Work shall become the property of the Contractor and shall be disposed of in a lawful manner. Removals shall include, but not limited to, all excess excavation material, trees and plants, debris, interfering portions of curb, gutters, asphalt and PCC concrete pavements and sidewalks (including base, where applicable), and miscellaneous items as shown on the Plans. The Contractor shall conform to the following requirements:

1) The Contractor shall not start any removal work unless it is prepared to perform reconstruction work within 24 hours of the time removals were begun, unless otherwise approved by the Engineer.

2) The Contractor shall complete forming and pouring of PCC construction within five (5) working days following the removal of existing material at any location.

3) The Contractor shall not remove on-site improvements until it is prepared to construct the adjacent street section and shall promptly restore all such improvements as applicable, upon completion of the adjacent street work.

All concrete removed shall be hauled off the Work site no later than the calendar day following the day that the removal is performed.

Prior to making removals, the Contractor shall meet with the Engineer to verify the limits of removals, locations of joins, to establish smooth joins and to ensure proper drainage. The Contractor may make minor changes in the location of joins and the limits of removals, provided a smooth join and proper drainage can be achieved and it has obtained prior written approval from the Engineer.

In order to protect the public streets from deterioration due to hauling of materials, the Contractor shall submit, prior to the Pre-Construction Meeting, for approval a proposed route for hauling of materials for disposal. Upon approval, the Contractor shall strictly adhere to that route, unless written permission from the Engineer is obtained to change the route.

300-1.3.2 Requirements.

a) **Bituminous Pavement.** Replace the first and second sentences with the following: Bituminous pavement shall be removed to neatly sawed edges.

Add subparagraphs (d) and (e):

(d) **Trees.** The City maintains a tree conservation policy. Unless otherwise shown, all trees are to be protected in place. Demolition and destruction of trees and tree parts, including trunks, branches and foliage, shall be limited to tree removals as shown on the Plans. Root pruning and removals shall be limited to the minimum required to construct new improvements where trees are to be conserved.

The Engineer shall place a visible removable "tag" on each tree proposed to be removed at least five (5) work days and no earlier than ten (10) work days prior to removal. Said "tag" is intended to give adjacent residents proof of trees to be removed or saved. Tags shall be on the sidewalk side of trees and located at least five feet (5') above ground.

The Contractor shall remove only trees that have been marked by the Engineer for removal. Trees shall be removed in a workmanlike manner so as not to injure other standing trees, plants, and improvements which are to be preserved.

Stumps shall be ground down three feet (3') below ground surface within five (5) feet of the center of the stump. All surface roots shall be removed within the parkway.

The Contractor shall conform to the following requirements:

1) The cutting down or removal of trees is prohibited after the prescribed working hours unless permission is granted by the Engineer.

2) All debris from pruning or removing a tree shall be cleaned up and hauled away from the Work site on the same day that the tree is cut or pruned. Firewood-size logs may be left neatly piled for residents to pick up for no longer than three (3) days.

3) All holes created from removal of tree stumps shall be backfilled and graded to finish level by the end of the workday.

4) Sprinkler systems disrupted by the Contractor shall be capped or restored by the end of the workday. Capped systems shall be restored to original working condition within three (3) days.

(e) **Miscellaneous Removals and Relocations.** This work shall include all removals not specifically listed in the Proposal or otherwise covered by these Specifications, and all necessary relocations and restorations of walls, fences, plants, hardscape, signs and other items, whether shown on the Plans or not, and as necessary to complete the improvements.

Add the following section:

300-1.3.3 Construction and Demolition Debris Recycling.

General. Consistent with the Agency's efforts to comply with the California Integrated Waste Management Act of 1989 (AB 939), the Contractor shall reduce, reuse, and/or recycle to the maximum extent feasible, the construction and demolition debris (debris) generated by this Contract hereby diverting the debris from disposal facilities, saving landfill space, and conserving virgin materials and natural resources.

Definitions.

Shall be as defined in the TORRANCE MUNICIPAL CODE, DIVISION 4, CHAPTER 3, ARTICLE 8 (or Section 43.8.1).

RECYCLING SUMMARY.

The Contractor shall prepare and submit a Recycling Summary report using the form included as Appendix IV summarizing the disposal, reuse, and/or recycling activities which occurred throughout the Contract duration. This report shall be submitted by the Contractor to the Agency, before or with its request for the final Progress Payment for said Contract.

Failure of the Contractor to submit the Recycling Summary within the time specified will result in damages being sustained by the Agency. Such damages are, and will continue to be,

impracticable and extremely difficult to determine. For failure to submit the Recycling Summary, as required, the Contractor shall pay to the Agency, or have withheld from monies due it, the sum of $10,000 for a contract of $500,000 or more. The Contractor shall pay to the Agency, or have withheld from monies due it, 2% of the total contract amount for a contract of $499,999 or less.

Execution of the Contract shall constitute agreement by the Agency and Contractor that $10,000 (2% for contracts $499,999 or less) is the minimum value of the costs and actual damage caused by the failure of the Contractor to submit the Recycling Summary within the time specified. Such sum is liquidated damages and shall not be construed as a penalty, and may be deducted from payments due the Contractor.

PAYMENT.

The cost of construction and demolition debris recycling and completing the Recycling Summary report shall be considered as included in the Contract Unit Price for the various Bid items. The quantities reported will be used for information gathering purposes and not for purposes of payment to the Contractor.

300-2 UNCLASSIFIED EXCAVATION.

300-2.2 Unsuitable Material.

300-2.2.1 General. Replace the first paragraph with the following:

If unsuitable material is found, the Contractor shall remove said material to the limits to be determined by the Engineer and shall replace said material with select fill or base material, as to be determined by the Engineer. Payment for removal and replacement shall be made as Extra Work or Force Account Work.

Payment for unsuitable material excavation and backfill shall be measured and paid for as Unclassified Excavation and Crushed Miscellaneous Base, respectively.

300-2.9 Payment. Add the following:

Payment for the removal and disposal of bituminous pavement for street reconstruction areas shall be considered as included in the Contract Unit Price for UNCLASSIFIED EXCAVATION and shall include sawcutting, removal of underlying subgrade and base, disposal, subgrade preparation and compaction, labor and equipment.

SECTION 301 – TREATED SOIL, SUBGRADE PREPARATION, AND PLACEMENT OF BASE MATERIALS

301-2 UNTREATED BASE.

301-2.1 General. Add the following:

Base is required under all PCC and AC improvements as shown on the Plans. Additional base may be required after review of work areas following removals. Prior to constructing new improvements, the Contractor shall verify with the Engineer that the base sections as shown on the Plans (including areas where no base is called for) are adequate. Payment for any changes shall be made pursuant to Section 3.

301-2.4. Measurement and Payment. Delete the second paragraph and add the following:

Payment for construction of CMB under AC pavement, shall be per the Contract Unit Price.

SECTION 302 – ROADWAY SURFACING

302-5 ASPHALT CONCRETE PAVEMENT.

302-5.4 Tack Coat. Add the following paragraph:

A Tack Coat shall be applied between base and finish courses when i) the finish course is not placed immediately after the base course (within 24 hours AND with no traffic using the base course surface); ii) to existing paved surfaces where new asphalt concrete overlaps or abuts existing pavement; and iii) along all edges of concrete gutters and PCC pavement slabs. There shall be no separate payment for Tack Coat.

302-5.5 Distribution and Spreading. Delete the fourth paragraph and replace with the following:

Asphalt concrete shall not be placed until the atmospheric temperature is a minimum of 55ºF and rising and the surface temperature of the underlying material is a minimum of 50ºF. Asphalt concrete also shall not be placed during unsuitable weather.

Delete Table 302-5.5(A) and replace with the following:

TABLE 302-5.5(A)

Specified Total Thickness of Pavement		Required Number of Courses	Class Of Mixture
Greater Than Inches	But Not More Than Inches		
0	1	-	(not allowed)
1	1-1/2	1	D2-PG 64-10
1-1/2	3	1	C2-PG 64-10
3	4	1	Base Course - B-PG 64-10 and/or Finish Course - C2-PG 64-10 as specified on Plans.
4	8	2 or more	Base Course - B-PG 64-10 for underlying course. Finish Course - C2-PG 64-10 for surface course.

SECTION 306 – UNDERGROUND CONDUIT CONSTRUCTION

306-1 OPEN TRENCH OPERATIONS

306-1.1 Trench Excavation

306-1.1.1. General. Add the following:

All trenches shall be sawcut to the bottom of the existing concrete or asphalt section to minimize damage to adjacent pavement. The bottom of the trench shall be excavated uniformly to the grade of the bottom of the pipe and shall be given a final trim using a string line for establishing grade, such that each pipe section when first laid will be continually in contact with the ground along the extreme bottom of the pipe.

Tunneling shall be performed under existing curb, gutter and cross-gutter as shown on the Plans. The Contractor shall exercise caution and care to prevent any damage in tunneling under these structures. There shall be no additional payment for this tunneling work. Payment for this work shall be included in the Contract Unit Price for the installation of the main pipeline.

306-1.1.2 Maximum Length of Open Trench. Replace the first paragraph with the following:

For work areas where the work zone is created by daily lane closures, the total length of work area, covering elements of the Contractor's operation, from exploratory excavations and pavement cutting to pipe installation and placement of base paving, shall be no more than 1,000 feet, or as limited by the applicable permit or traffic control staging plan. The maximum length of open trench shall be 300 feet, or the distance necessary to accommodate the amount of pipe installed within the permitted work hours, whichever is greater. The distance is the collective length at any location, including open excavation, pipe laying and appurtenant construction and backfill which has not been temporarily resurfaced.

The Contractor shall either place backfill or steel plate or place temporary or base pavement at the end of each work day so he can open all travel lanes to traffic. The last twenty (20) feet of each trench may be open provided that this length is covered with traffic rated plating. Steel plates shall be non-skid and shall be tacked down or spiked and placed flush with the surrounding pavement. The Contractor shall be required to place temporary AC at the edges of the steel plates.

The above requirements for backfilling or use of steel plates will be waived in cases where the trench is located further than 100 feet from any traveled roadway or occupied structure. In such cases, however, barricades and warning lights satisfactory to the Engineer shall be provided and maintained.

306-1.1.3 Maximum and Minimum Width of Trench. Add the following:

For sewers, potable and reclaimed water pipelines and storm drains, the bottom of the trench shall have a minimum width equal to the outside diameter of the pipe plus 12 inches and a maximum width equal to the outside diameter of the pipe plus 16 inches, unless otherwise shown on the Plans.

Add the following subsections:

306-1.1.7 Trench Over-Excavation. Trenches shall be over-excavated beyond the depth shown when ordered by the Engineer. Such over-excavation shall be to the depth ordered. The trench shall be refilled to the grade of the bottom of the pipe with either selected granular material obtained from the excavation, sand or crushed rock, at the option of the Engineer. When crushed rock is

ordered, the material shall be a well-graded material of 1-1/2 inch maximum size. Bedding material shall be placed in layers brought to optimum moisture content, and compacted to 95 percent of maximum density where the pipeline trench passes under structures and 90 percent elsewhere. All work specified in this subsection shall be performed by the Contractor and paid in accordance with 3-3 of these Special Provisions.

Any over-excavation carried below the specified grade and not ordered by the Engineer, specified or shown on the Plans, shall be refilled to the required grade with suitable selected granular material. Such material shall be moistened as required and compacted to 95 percent of maximum density under structures and 90 percent elsewhere. Such work shall be performed by the Contractor at its own expense.

306-1.1.8 Construction Dewatering and By-Pass.

The Contractor's attention is directed to the presence of shallow groundwater on this Project (see soil borings).

The Contractor shall prepare and implement a dewatering system to pump, contain, transport, and dispose of all groundwater generated from the excavation for the Project. All Contractor operations shall be in full compliance with applicable Federal, State, and Local laws and regulations that govern water quality. The Contractor shall at all times properly operate and maintain all components of the dewatering and containment systems. The equipment shall be cleaned of silt/sediment as directed by the Engineer and all leaks shall be immediately repaired.

If during the progress of the Work, the Engineer determines that the dewatering system is inadequate or does not fully comply with these Special Provisions, the Contractor shall, at his expense, furnish any equipment, labor, materials, and outside services necessary to perform the Work to the satisfaction of the Engineer.

Besides groundwater, the Amie Basin also receives flow from urban runoff and groundwater wells. The flow from the well enters the basin at the north east drain and the urban runoff enters the basin at the south side drain. These flows can be dewatered along with the groundwater or the contractor can coordinate a by-pass with the CITY. The by-pass is to route intermittent well discharges around the job site.

WRD Well Flow Rate		
Time (minutes)	**Flow Rate (gpm)**	**Comments**
7.5	1,560	Start-up
4.5	1,560	Shut-down
The minimum pumping times are provided in this table.		

306-1.1.8.1 Dewatering and By-Pass Plan.

The Contractor shall submit to the CITY for review a dewatering and by-pass plan per Subsection 2-5.3. Review by the CITY shall not relieve the Contractor of the responsibility for the adequacy of the design, installation, and maintenance of the dewatering and by-pass system or full compliance with these provisions and all other applicable Federal, State, and Local laws and regulations.

The Amie Basin Pump Station shall be protected in place. The Contractor may provide temporary connection to the Amie Basin Pump Station 10" force main in Amie Avenue, providing that valving is installed to allow normal operation of Amie Pump Station during a rain event.

The dewatering and by-pass plans shall include details of the methods and procedures for the pumping, containment, management, transportation, and of disposal of all groundwater and urban runoff generated on the Project. The plan shall include, as a minimum, the following sections:

- A diagrammatic representation of the dewatering system showing the location of all equipment within the Project limits (including piping details, power source, etc.). The dewatering plan shall also include equipment specifications and all other information, for the complete understanding and operation of the dewatering system
- The disposal facility for the groundwater generated from this Project, including copies of all applicable current permits and waste acceptance policy for the disposal facility, and a copy of a samples completed non-hazardous waste manifest for the transportation of the water to the disposal facility.
- The Contractor shall complete all required forms/documentation to profile the groundwater generated. All profile forms shall be approved or signed by the CITY.
- The aboveground components of the dewatering system shall be secured with a perimeter fence to prevent unauthorized access.
- Plan to include piping to divert runoff from storm drains.

306-1.1.8.2 Reporting for Dewatering Activities.

At the completion of dewatering activities, the Contractor shall prepare and submit to the Engineer a tabular report summarizing all dewatering activities, including date of transportation, volume of water transported, copies of any required laboratory analytical data sheets (including QA/QC sheets, COCs, etc.), and all other applicable information requested by the Engineer within five (5) working days from the completion of dewatering activities or the CITY will hold payment for this bid item, until the report is completed per CITY satisfaction.

306-1.1.8.3 Payment.

The Allowance in the Bid for PREPARATION AND IMPLEMENTATION OF DEWATERING PLAN shall be reserved as compensation for furnishing all labor, equipment, materials, and temporary power for performing all work necessary for the preparation of the dewatering plan, construction, restoration and all other incidental costs not specifically listed as separate items of work in the Schedules of Prices.

306-1.2 INSTALLATION OF PIPE

306-1.2.1 Bedding.

306-1.2.1.1 General. Replace the second sentence of the third paragraph with the following:

There shall be 4 inches minimum of bedding below the pipe barrel of sewer and storm drain pipes and 6 inches minimum of bedding below the pipe barrel of water pipes.

Add the following to the fifth paragraph:

Bedding material for reclaimed water pipelines shall have a minimum SE of 30. Bedding shall be imported sand with 100 percent passing a 3/8-inch sieve and not more than 20 percent passing a 200-mesh sieve.

306-1.2.2 Pipe Laying. Add the following:

Unless otherwise shown on the Plans or directed by the Engineer, minimum pipe cover for water pipes shall be 42 inches below proposed grade. Installation of ductile iron water mains and appurtenances shall conform to the requirements of AWWA C600. Installation of PVC pipes shall conform to the requirements of AWWA C900 and C905. The Contractor shall install pipe closure sections, fittings, valves and appurtenances shown, including pipe supports, bolts, nuts, gaskets and joining materials necessary for a complete installation.

At all times when the work of installing water mains, reclaimed water pipelines, sewers or storm drains is not in progress, all openings into the pipe and the ends of the pipe in the trenches or structure shall be kept tightly closed to prevent entrance of animals and foreign materials. The Contractor shall take all necessary precautions to prevent the pipe from floating due to water entering the trench from any source, shall assume full responsibility for any damage due to this cause and shall, at no cost to the CITY, restore and replace the pipe to its specified condition and grade if it is displaced due to floating. The Contractor shall maintain the inside of the pipe free from foreign materials and in a clean and sanitary condition until its acceptance by the Engineer.

Unless otherwise shown on the Plans or directed by the Engineer, concrete thrust blocks shall be constructed at all changes in direction. Thrust blocks shall be constructed against undisturbed earth. Each thrust block shall be placed so that valves and fittings are accessible for repair. Thrust blocks shall be as shown on City of Torrance Standard Plan No. T713 or as directed by the Engineer.

The Contractor shall furnish and place a blue tape marked "Caution Water" every 36-inches or less on top of the bedding and prior to placing concrete slurry or densified backfill along the length of the potable pipelines. The Contractor shall furnish and place an identification tape marked "CAUTION-RECLAIMED WATER LINE BELOW," for reclaimed water pipes in accordance with 207-25.9 of these Special Provisions.

All water lines shall be installed with a two (2) feet clearance from existing utility lines. A minimum of 1-foot clearance shall be provided when crossing utility lines unless directed otherwise by the Engineer. Separation of water mains from sewer and storm drain lines shall conform to the requirements of City of Torrance Standard Plan No. T714.

All exposed piping shall be adequately supported with devices of appropriate design. Where details are shown on the Plans, the supports shall conform thereto and shall be placed as indicated; provided that the support for all piping shall be complete and adequate regardless of whether or not supporting devices are specifically called for on the Plans.

Add the following subsections:

306-1.2.14 Flexible Couplings. Flexible couplings shall be installed according to the following requirements:

1) Clean each pipe end for a distance of 6 to 8 inches. Remove oil, dirt, loose scale, and rust so that the gaskets will seat on the pipe barrel to provide a positive seal. Wire brushes or non-oily rags may be used, depending on the condition of pipe ends.

2) Slip the follower rings over the pipe ends and slide them back over the cleaned area.

3) Wipe the gaskets clean, immerse them in soapy water or approved gasket lubricant, and slide them over the pipe ends.

4) Clean the coupling middle ring, paying particular attention to flare on the ends where the gasket will seat. Slip the middle ring entirely over the end of the pipe.

5) Position the end of the pipe to be joined to the other pipe such that a 1/2-inch gap is maintained between pipes. Center the coupling middle ring over the gap.

6) Lubricate the pipe and the flares of the middle ring with soapy water or gasket lubricant. Slide the gaskets and followers into place making sure the gaskets are pushed under the middle ring flare all the way around.

7) Insert the bolts. Nuts should be run on with the rounded or chamfered edge toward the follower ring.

8) Wrenching should be done progressively, drawing up the bolts on opposite sides a little at a time and returning to retighten until all bolts have a uniform tightness. During wrenching it is advisable to strike the follower rings with a hammer occasionally to make sure they are seating properly.

9) Torque application shall be in accordance with the manufacturer's recommendations.

306-1.3. Backfill and Densification.

306-1.3.1 General. Delete the seventh through the eleventh paragraphs and replace with the following:

Where trench is less than or equal to two (2) feet wide in the roadway, the trench shall be backfilled with a sand-cement slurry (100-E-100) backfill per City of Torrance Standard Plan No. T116-2 Notes 1A and 2A, unless otherwise approved by the Engineer.

Where trench is greater than two (2) feet wide or if trench walls are sloped, the trench shall be backfilled with Crushed Miscellaneous Base or other material with a sand equivalent of 30 or greater and shall be select granular material free from organic matter per City of Torrance Standard Plan No. T116-2, Notes 1A and 2A. Imported backfill material shall be in accordance with 306-1.3.7. Backfill material shall be moistened to optimum moisture content and compacted to 95 percent of maximum density in the upper 3 feet and 90 percent below the upper 3 feet.

306-1.3.4 *(omitted from this specification)*

306-1.3.5 Jetted Bedding and Backfill Compaction Requirements. Replace the entire subsection with the following:

Trench bedding and backfill densified through jetting shall be densified to a minimum relative compaction of 95 percent in the upper 3 feet of backfill and 90 percent below the upper 3 feet.

306-1.3.6 Mechanical Compaction Requirements. Replace the entire subsection with the following:

Mechanically compacted trench backfill shall be densified to a minimum relative compaction of 95 percent in the upper 3 feet of backfill and 90 percent below the upper 3 feet.

Add the following subsection:

306-1.3.9 Compaction Tests. Tests to determine materials compaction shall be performed by a separate CITY-hired subcontractor, at the CITY's expense, except that all tests which fail to meet the requirements of these Special Provisions shall be paid for by the Contractor. Maximum density shall be determined in accordance with ASTM D1557 method, modified to use five layers. Field density tests shall be performed in accordance with the test procedure specified in ASTM D1556.

306-1.4 Testing Pipelines.

306-1.4.9 Pressure Testing of Reclaimed Water Mains. Pressure testing of reclaimed water mains shall be in accordance with 306-1.4.7 of these Special Provisions, except that test pressure shall be 200 psi as measured at the lowest elevation of the pipeline under test, or as directed by the Engineer.

306-1.4.10 Payment. There shall be no separate payment for testing and disinfection. These costs shall be included in the Contract Unit Price per linear foot of pipe installed.

306-1.5 Trench Resurfacing.

306-1.5.1 Temporary Resurfacing. Delete the last two paragraphs and replace with the following:

For concrete slurry backfill, a minimum of 24 hours shall elapse before temporary resurfacing will be allowed to be placed on the backfill. All temporary resurfacing shall be flush to adjacent surfaces. The Contractor shall be responsible to immediately repair or replace any damaged or settled resurfacing. The temporary resurfacing shall be replaced with permanent resurfacing not more than 15 calendar days after placement of temporary resurfacing.

There shall be no separate payment for temporary resurfacing. Full compensation for furnishing, placing, maintaining, removing, and disposing temporary resurfacing materials shall be included in the Contract Unit Price per lineal foot of pipe installed.

306-1.5.2 Permanent Resurfacing. Add the following:

Pavement removed or damaged in connection with performing the Work required under the Contract shall be replaced by the Contractor in accordance with these Special Provisions and City of Torrance Standard Plans. If a strip of existing pavement less than 4 feet wide is left between a trench and a gutter or curb or edge of pavement, it shall be removed and new pavement placed in its stead. In most cases if the plans show a distance of 5 feet or less between the water main centerline and the curb, there will be 4 feet or less of old pavement strip that shall be removed and replaced. In cutting or breaking up street surfacing, the Contractor shall not use equipment which will damage the adjacent pavement. If the adjacent pavement is damaged, the Contractor shall be responsible for replacing the pavement with the same kind or better at its expense.

306-1.6 Basis of Payment for Open Trench Installations. Add the following as first sentence of the first paragraph:

This subsection shall apply to payment of installed potable water mains, sewer and storm drain pipes.

Revise the second paragraph to read:

The price per linear foot for pipe and conduit in place shall be considered full compensation for all wyes, tees, bends, monolithic catch basin connections, and specials shown on the Plans; the removal of interfering portions of existing sewers, storm drains, and improvements; the closing or

removing of abandoned conduit and structures; the excavations of the trench; the control of ground and surface waters; the preparation of subgrade; placing and joining pipe; connecting to existing systems; beddings; backfilling the trench; permanent resurfacing; construction survey; shoring; and all other work necessary to install the pipe or conduit, complete in place.

Delete the phrase, "excluding temporary resurfacing" from the last two paragraphs.

306-5 ABANDONMENT OF CONDUITS AND STRUCTURES. Add the following subsections:

306-5.1 Abandoning Existing Water Mains. The Contractor shall remove existing water mains and appurtenances from service at the locations shown on the Plans or as directed by the Engineer. Water mains specified to be abandoned in place, 12 inches in diameter and larger shall be filled with cement grout and have their ends cut, plugged and capped. Water mains specified to be abandoned in place, 10 inches in diameter and smaller shall have their ends cut, plugged, capped and left intact.

306-5.2 Abandoning Existing Water Valves. The Contractor shall abandon existing water valves at the locations shown on the Plans and in accordance with the following requirements:

1) Where the valves are located in the parkway, the valves shall be abandoned by closing the valves, removing the valve cans, filling the hole with satisfactory material, and compacting it to 95% of maximum density and restore area to match adjacent.

2) Where the valves are located in concrete, the valve shall be abandoned by closing the valves, sawcutting the concrete, removing the valve cans, and filling the hole with concrete.

3) Where the valves are located in the curb, the valve shall be abandoned by closing the valves, sawcutting the concrete, removing the valve cans and repairing the curb with concrete epoxy to the satisfaction of the Engineer.

4) Where the valves are located in asphalt, the valves shall be abandoned by closing the valves, sawcutting the asphalt, removing the valve cans, filling the hole with slurry to the bottom of the asphalt section, and providing an asphalt cap on slurry.

5) All valve can removals shall be done in the presence of the Engineer.

SECTION 310 - PAINTING

310-5 PAINTING VARIOUS SURFACES.

Use Sections 84-1 and 84-2 of the Caltrans Standard Specifications.

SECTION 84: TRAFFIC STRIPES AND PAVEMENT MARKINGS

84-1 GENERAL Add the following:

The Contractor shall paint red curb markings as shown. When street addresses painted on curb faces have been eliminated due to work associated with this contract, each street address shall be restored by painting on the face of new curb. Background shall be white in color and address numbers shall be black in color and 4 inches in height. Existing paint markings on curbs shall be removed prior to applying the new paint markings.

84-1.01 Description. Replace the first two paragraphs with the following:

This work shall consist of applying thermoplastic traffic stripes (traffic lines) and pavement markings at the locations and in accordance with the details shown on the Plans or designated by the Engineer, and as specified in these Specifications and Special Provisions.

The thermoplastic material shall conform to the provisions of 84-2.02 of the Caltrans Standard Specifications.

84-2.06 Payment. Replace the entire subsection with the following:

Payment for traffic striping, pavement marking, and curb markings shall be on a lump sum basis per the Contract Unit Price and shall include full compensation for furnishing all labor, materials, tools, equipment, and incidentals, necessary to complete the Work.

All costs for establishing alignment of traffic stripes, pavement markings, layout, temporary pavement painting, and sandblasting of existing lines and markings shall be included and no extra costs will be allowed.

Add the following subsections:

310-5.6 Exterior Coatings for Exposed Water Pipes and Appurtenances

310-5.6.1 General. The exterior surfaces of water pipes and appurtenances that will be exposed to the atmosphere inside structure or above ground shall be thoroughly cleaned and then given a shop coat of rust-inhibitive primer conforming to 210-1.8 of these Special Provisions.

Where practicable, each succeeding coat of paint shall be of a different color. Colors as specified shall be maintained unless found to be no longer available from the manufacturer. If an alternative paint system is selected and approved by the Engineer, the Engineer will select the colors to be utilized from the color samples presented.

Each coat shall produce a minimum film thickness as specified herein. In areas where this thickness is not developed, sufficient additional coats shall be applied to produce it. All coating thicknesses specified herein refer to minimum dry film thickness.

Manufacturer's instructions shall be strictly followed in the application of proprietary coatings and materials.

310-5.6.2 Ungalvanized Ferrous Metals. Prior to coating, surfaces shall be sandblasted in accordance with SSPC-SP-6 (Commercial Blast Cleaning), except that where, in the Engineer's opinion, sandblasting is inappropriate because of the size, location or nature of the surface, or because of the difficulty in protecting adjacent work, such surfaces shall be either power tool cleaned in accordance with SSPC-SP-3 (Power Tool Cleaning) or hand tool cleaned in accordance with SSPC-SP-2 (Hand Tool Cleaning).

All paint shall be brush applied unless an alternate method is approved in advance by the Engineer. Surfaces shall be primed or spot primed as required. Prime coat shall be 2 mils. followed by two succeeding coats of 2 mils. each. Total thickness of the completed coating system shall be 6 mils.

310-5.6.3 Galvanized Ferrous Metals. Prior to coating, surfaces shall be cleaned in accordance with SSPC-SP-7 (brush-off blast cleaning).

All paint shall be brush applied unless an alternate method is approved in advance by the Engineer. Surfaces shall be primed or spot primed as required. Prime coat shall be 2 mils. followed by two succeeding coats of 2 mils. each. Total thickness of the completed coating system shall be 6 mils.

310-5.6.4 Payment. There shall be no separate payment for painting and coating. This cost shall be included in the work to which it is appurtenant.

310-5.8 Painting of Reclaimed Water Piping and Appurtenances

310-5.8.1 General. The Contractor shall furnish all material, labor, and equipment necessary to line and coat all piping, valves, fittings, pipe hangers, and other ferrous metal surfaces not shop lined and coated in accordance with the following schedule:

Item	Color	No. of Coats
Valve Box Covers	Purple	2
Air Valve Blow-off Valves	Purple	2
Vault Covers (Top)	Zinc Chromate Primer	1
	Aluminum	2
Vault Covers (Underside)	Koppers No. 50 Bitumastic	2
Piping and Valves (In Vault)	Tenman 66	2
Guard Posts	Safety Yellow	2
Aboveground or Exposed Pipe	See Section 310-5.8.3	---

310-5.8.2 Surface Preparation. All ferrous surfaces to receive protective coatings shall be sandblasted to commercial standards per 310-2.5 prior to the application of coatings. All surface irregularities such as weld spatter, sharp corners, rough welds, etc., shall be ground smooth. All surfaces shall be completely free of grease, oil, and other foreign material.

310-5.8.3 Aboveground or Exposed Pipeline. Pipeline which will be aboveground or permanently exposed to the environment will be prepared and coated using Zinc Rich Primer/Epoxy/Urethane coating system as follows:

310-5.8.3.1 Preparation. Surfaces may be shop primed and coated or field coated. Preparation of metal surfaces shall be in accordance with the manufacturer's recommendations and in accordance with SPC-SP10, "Near White Blast Cleaning."

Coated surfaces damaged during shop priming or installation shall be prepared and recoated in accordance with the coating manufacturer's recommendations and these specifications.

310-5.8.3.2 Coating System. The coating system shall be a 3-coat system as follows:

Primer: Tnemec; Series 90-97, "TnemeZinc," Zinc Rich Urethane Primer - 3 mils.

Intermediate: Tnemec; Series 66, "Hi-Build Epoxoline," Epoxy - Polyamide Coating - 4 mils.

Finish: Tnemec; Series 75 "Endura-Shield," Hi-Build Acrylic Polyurethane Enamel - 4 mils.

310-5.8.3.3 Inspection. Inspection shall be as follows:

Shop primed or factory finished items shall be inspected at the job site before further painting or coating. Areas of chipped, peeled, or abraded coating shall be in accordance with these requirements.

Contractor shall provide scaffolding and testing equipment to permit inspection.

Color shall be selected by the Engineer from submitted paint samples of the manufacturer's standard colors.

310-5.8.4 Payment. There shall be no separate payment for painting and coating. This cost shall be included in the work to which it is appurtenant.

310-5.9 Waterproofing (Concrete)

310-5.9.1 General. The Contractor shall furnish all material, labor and equipment necessary to waterproof the interior and exterior of all manholes and vaults.

310-5.9.2 Surface Preparation

1) Do not treat concrete surfaces with chemical hardeners or curing agents prior to the application of waterproofing.

2) Examine surfaces to be waterproofed for form tie holes and structural defects, such as honeycombing, rock pockets, faulty construction joints, cracks, etc. Repair these areas in accordance with Section 303.

3) Concrete surfaces shall have an open capillary system to provide tooth and suction and shall be clean, free from scale, form oil, latency, curing compounds, and any other foreign matter. Lightly sandblast, water blast, or acid etch with muriatic acid (15% to 20%) to provide a clean absorbent surface. Saturate surfaces to be acid etched with water prior to application of acid. Vertical surfaces may have a sacked finish. Do not apply a slurry coat of water materials to horizontal concrete deck surfaces that are less than 20 hours old.

4) Use light sandblasting or etching to remove the surface glaze of dense or steel troweled concrete.

5) Abrasive clean and wash construction joints.

310-5.9.3 Application

1) After completing repairs, apply a top-coat system to the concrete surfaces to be treated, apply after curing and finishes are complete. Application of waterproofing and any point top coatings shall conform to the manufacturers recommended application procedures.

2) The Contractor shall have the manufacturer's representative advise and/or supervise the waterproofing application in person.

3) Apply crystalline waterproofing material to concrete, which has been thoroughly saturated with clean water. Moisten surfaces to be treated prior to application. Remove free water prior to application of waterproofing material.

4) Apply crystalline waterproofing to:

   (a) Interior walls and roof of concrete vaults and manholes. Exterior walls of concrete vaults and manholes.
   (b) Joints of precast concrete manholes as shown on the Plans.
   (c) The interior surfaces shall have a white color and the exterior a gray color.

5) Apply second coat when the first coat has reached an initial set. Use light water spray on surfaces to be coated if rapid drying occurs.

310-5.9.4 Payment. There shall be no separate payment for waterproofing. This cost shall be included in the work to which it is appurtenant.

SECTION 314 – TRAFFIC STRIPING, CURB AND PAVEMENT MARKINGS, AND PAVEMENT MARKERS

Delete the entire Section 314 and replace with Sections 85-1.06, 85-1.07 and 85-1.09 of the Caltrans Standard Specifications.

85-1.06 Placement. Add the following:

The solid 4" white lines at intersections shall have a marker installed at each end. These markers shall be placed on the line.

Markers shall not be installed on bike lane striping.

85-1.09 Payment. Add the following:
There shall be no separate payment for pavement markers. Full compensation for furnishing all labor, materials, tools, equipment and incidentals, and for doing all the work involved in furnishing and placing pavement markings, complete in place, including adhesives and establishing alignment for pavement markers, as shown on the Plans, and specified in these Special Provisions shall be included in the Contract Unit Price for traffic striping and pavement markers as described in Section 84-2.06 of these Special Provisions.

Add the following Section 315 in its entirety.

SECTION 315 - PUMP STATION

315-1 GENERAL.

315-1.1 Section Includes.

A. Site assembled and tested precast wastewater utility pumping stations, including:
   1. Precast concrete wet-well and valve vault;
   2. Pumps and mountings;
   3. Control panel;
   4. Piping/Valves/Fittings integral to pumping station;
   5. Pumping station design services.

315-1.2 Action Submittals.

A. Product Data: Provide manufacturer's technical data including station capacities and operating characteristics;
B. Pump Performance Curves;
C. Shop Drawings: Show fabrication and installation details;
D. Concrete Structural Reinforcement drawings and calculations and buoyancy calculations for concrete structures, stamped and signed by a licensed California professional civil engineer.

315-1.3 Closeout Submittals.

A. Field Reports: Provide quality-control test reports documenting station operation performance;
B. Operation and Maintenance Manual: Include approved submittals and schedule for maintenance requirements. Six (6) hard copies and one electronic copy on a flash drive shall be provided.

315-1.4 Quality Assurance.

A. Manufacturer Qualifications: NPCA-certified plant, with experience and demonstrated capability to produce work specified in this Section;
B. Electrical Components, Devices, and Accessories: Listed and labeled as defined in NFPA 70, Article 100, by a testing agency acceptable to authorities having jurisdiction, and marked for intended use.

315-1.5 Warranty.

A. Manufacturer's Warranty: Manufacturer's standard form in which manufacturer agrees to repair or replace components of pumping stations that fail in materials or workmanship within specified warranty period;
   1. Failures include, but are not limited to, the following:
      a. Structural failures including precast concrete structures, hatches, and other accessories;
      b. Faulty operation of pumps, controls, or pumping and piping system accessories;
      c. Deterioration of metals, metal finishes, and other materials beyond normal use;
   2. Warranty Period for Precast Concrete Structures: One year from date of Substantial Completion.
   3. Warranty Period for Pumps: One year from date of Substantial Completion;
   4. Warranty Period for Control Panel: One year from date of Substantial Completion.

315-2 PRODUCTS.

315.2.1 Manufacturer.

A. The Contractor must supply a complete pump station including all of the following:

   1. A full submittal package including all parts;
   2. A 1-year full system warranty for the entire system that supersedes all vendor warranties;
   3. Day of start-up testing provided by an employee of the pump supplier;
   4. A start-up report;
   5. Operating and Maintenance manuals for the entire system (2 hard copies and 1 electronic copy);
   6. Training on operation and maintenance of the system by an employee of the pump supplier;

7. All parts including precast concrete, pumps with auto-coupling system, piping within the wet well and the valve vault, valves, hatches, ladders, and control panel.

An employee of an individual component vendor or manufacturer, or supply company, or service company other than the pump supplier will not be accepted for start-up testing and/or system training.

315.2.2 Precast Concrete Structures.

A. Precast Concrete Valve Vault: ASTM C 890, precast, reinforced concrete;
   1. Base Section: Thickness for floor slab and minimum thickness for walls to be determined by a licensed engineer prior to construction based on loading and buoyancy requirements;
   2. Flexible Resilient Pipe Connectors: ASTM C 923.

315.2.3 Precast Concrete Materials And Mix Design.

A. General: Precast concrete according to ACI 318;
B. Concrete Design Mix: 4,000 psi minimum, with 0.45 maximum water/cementitious materials ratio.

315.2.4 Access Doors and Frames.

A. Wet Well Access Grate: Galvanized steel grate with 2-inch openings, hinged, lockable, incidental traffic loading, nut rails on front and back.
B. Valve Vault Access Door: Aluminum angle frame, multi-door hatch per U.S.F. Fabrication model TH4 84 x 168 aluminum hatch and frame (or approved equal), gasketed, incidental traffic loading, Slamlock with Threaded Plug, Removable Outside Key Fixed inside handle, SS tamperproof hinges.

315.2.5 Wet-Well Accessories.

A. Guide Rail Assembly: Dual guide rail assembly, stainless steel, Type 304, with pump guide brackets configured to match requirements of selected pumps. Single guide rail assembly will not be accepted;
B. Flexible Resilient Pipe Connectors: Flexible connector, ASTM C 923;
C. Liners:
   1. A protective liner shall be used whenever a precast concrete manhole or structure is used in a sanitary or light industrial sewer system in which the potential for corrosive attack to the concrete substrate exists;
   2. The liner shall be the Dura Plate 100 liner as manufactured by A-LOK® Products, Inc., Tullytown, PA or approved equal;
   3. The design of the liner shall provide a corrosion protective barrier permanently embeded to the inside well of the structure.
   4.

315.2.5.1 Submersible Wastewater Grinder Pump.

A. SCOPE

Furnish - 1 ABS Model PIR PE2 PE110/2-E-60HZ Submersible Grinder wastewater pump or pre-approved equal. The pump shall be capable of delivering 58.8 U.S. GPM at a total dynamic head of 201.1 feet with a hydraulic efficiency of 24.6%. An additional point on the same curve shall be 78 U.S. GPM at a total dynamic head of 191 feet. Shut off head shall be 235 feet (minimum). The motor shall be an integral part of the pump unit. The motor shall be

14.8 HP connected for operation on a 460 volt, 3 phase, 60 hertz electrical supply service. Pumps are intended for wet pit installation and shall be supplied with a standard cast iron auto-coupling to support the pump. Each pump unit shall be fitted with a stainless steel chain assembly, 15 feet long for lifting the pump. The working load rating of the lifting system shall be a minimum of 50% greater than the pump weight. Each pump motor shall be equipped with 49 feet of power and control cable sized in accordance with NEC and CSA standards.

B. PUMP DESIGN

The heavy duty submersible grinder pump(s) shall be capable of handling raw unscreened sewage and other similar solids-laden fluids without clogging. The pump shall be driven by a Premium Efficiency three phase motor, providing the highest levels of operational reliability and energy efficiency.

C. GUIDE RAIL BASE ASSEMBLY

There shall be no need for personnel to enter the wet well to remove or reinstall the pump(s). In a wet pit installation, the discharge base & elbow assembly shall be permanently installed in the wet well and connected to the discharge piping. In order to prevent binding or separation of the pump from the guide rail system, the pump(s) shall connect to the guide rail base automatically and firmly, guided by one 2 inch guide pipe extending from the base elbow to the top of the station. Systems using guide cable in lieu of rigid guide bars or pipes shall not be considered acceptable. The sliding guide bracket shall be a separate part of the pumping unit.

A field replaceable Nitrile (Buna-N) rubber profile gasket or o-ring shall accomplish positive sealing of the pump flange/guide rail bracket to the discharge elbow. Base assemblies which rely solely on metal to metal contact between the pump flange and discharge base elbow as a means of sealing are inherently leak prone, and shall not be considered equal. No portion of the pump shall bear directly on the floor of the sump. The guide rail system shall be available in an optional non-sparking version, approved by Factory Mutual for use in NEC Class 1, Division 1, Group C&D hazardous locations.

D. VERTICAL PUMP STAND (optional)

As an alternative to a Guide Rail System, the pumps shall be a supported by a vertical pump stand. The stand is bolted to the pump and provides a means to stand the pump on the wet well floor in a vertical position.

E. PUMP CONSTRUCTION

Major pump components shall be of gray cast iron, EN-GJL-250 (ASTM A-48, Class 35B) with smooth surfaces devoid of porosity or other irregularities. All exposed fasteners shall be stainless steel, 1.4401 (AISI type 316) construction. All metal surfaces coming into contact with the pumped media (other than the stainless steel components) shall be protected by a factory applied spray coating of zinc phosphate primer followed by a high solids two part epoxy paint finish on the exterior of the pump. The pump shall be equipped with an open lifting hoop suitable for attachment of standard chain fittings, or for hooking from the wet well surface. The hoop shall be stainless steel, 1.4401 (AISI 316), and shall be rated to lift a minimum of four times the pump weight.

Sealing design for the pump/motor assembly shall incorporate machined surfaces fitted with Nitrile (Buna-N) rubber O-rings. Sealing will be the result of controlled compression of rubber O-rings in two planes of the sealing interface. Housing interfaces shall meet with metal to metal contact between machined surfaces, and sealing shall be accomplished without requiring a specific torque on the securing fasteners. Rectangular cross sectioned gaskets

requiring specific torque limits to achieve compression shall not be considered equal. No secondary sealing compounds shall be required or used.

F. GRINDER MECHANISM:

The grinder mechanism shall consist of two circular, hardened cutter elements, one rotating and one stationary. The cutter material shall be similar to an AISI 440C stainless steel with the addition of cobalt, vanadium, and molybdenum for superior abrasion resistance and a hardness of Rockwell C 58-62. The rotating element shall be secured to the end of the pump shaft directly below the impeller by a stainless steel bolt which is mechanically prevented from loosening by a positively engaged ratcheting washer assembly. It shall be keyed to the impeller so that it rotates with the motor. The head of the securing bolt shall be effectively recessed within the cutter element bore to prevent disruption of the flow stream and catching of solid material in the wastewater.

The stationary element shall be secured to the Self Cleaning Wear Plate and positioned so that it is concentric to and aligned with the rotating element. Both elements shall incorporate a sinusoidal wave pattern at the grinding interface to create a shearing and cutting action between the elements as the rotating cutter spins. The rotating cutter shall incorporate an integrated solids deflector to prevent items such as plastic bags from covering the grinder assembly and starving the pump. All wastewater being pumped by the impeller shall be drawn through the grinder mechanism by the natural suction of the pump impeller and reduced to a particle size approximately 1/8 inch. The grinder mechanism shall not require routine adjustments throughout the life of the grinder assembly.

Impeller:

The impeller shall be a semi open multi vane design with a solids passage size sufficient to prevent clogging on the wastewater material that has passed through the integrated grinder assembly. The impeller material shall be gray cast iron, EN-GJL-250 (ASTM A-48, Class 35B). The impeller shall have a slip fit onto the motor shaft and drive key, and shall be securely fastened to the shaft by a stainless steel bolt which also holds the rotating cutter element. The impeller shall be dynamically balanced to the ISO 10816 standard to provide smooth vibration free operation.

Self Cleaning Wear Plate:

The ABS ContraBlock style wear plate shall be constructed from gray cast iron, EN-GJL-250 (ASTM A-48, Class 35B). The wear plate shall be designed to hold and secure the stationary cutter firmly in place, concentric to the rotating cutter. The impeller side of the wear plate shall incorporate an outwardly spiraling V-shaped groove to shred and force stringy solids outward from the impeller and through the pump discharge. The wear plate shall be mounted to the volute with four stainless steel securing screws and four stainless steel adjusting screws to permit close tolerance adjustment between the wear plate and impeller for maximum pump efficiency. Adjustment to allow for wear and to restore peak pumping performance shall be easily accomplished in the field utilizing standard tools, and without requiring disassembly of the pump. The use of fixed or non-adjustable wear plates or rings, or systems that require disassembly of the pump or shimming of the impeller to facilitate adjustment shall not be considered equal.

Pump Volute:

The pump volute shall be single piece gray cast iron, EN-GJL-250 (ASTM A-48, Class 35B) non-concentric design with centerline discharge. Passages shall be smooth and large enough to pass any solids which may enter the impeller. Discharge size shall be 2 inch. The discharge flange design shall permit attachment to the ABS guide rail system, and shall also

accept 2" ANSI class 125 flanged fittings. The minimum working pressure of the volute and pump assembly shall be 10 bar (145 psi).

G. PREMIUM EFFICIENCY MOTOR

The Premium Efficiency motor shall meet efficiency standards in accordance with IEC 60034-30, level IE3 and NEMA Premium*. Motor rating tests shall be conducted in accordance with IEC 60034-2-1 requirements and shall be certified accurate and correct by a third party certifying agency. A certificate shall be available upon request.

* IE3 and NEMA Premium efficiency levels are equivalent, however the NEMA Premium standard is intended to cover dry installed motors only, not integrated submersible motors.

The Premium Efficiency motor shall be housed in a water tight gray cast iron, EN-GJL-250 (ASTM A-48, Class 35B) enclosure capable of continuous submerged operation underwater to a depth of 20 meters (65 feet), and shall have an IP68 protection rating. The motor shall be of the squirrel-cage induction design, NEMA type B, Premium Efficiency. The copper stator windings shall be insulated with moisture resistant Class H insulation materials, rated for 180oC (356oF). The stator shall be press fitted into the stator housing. The use of bolts, pins or other fastening devices requiring penetration of the stator housing is unacceptable. The rotor bars and short circuit rings shall be made of cast aluminum.

The motor shall be designed for continuous duty. The maximum continuous temperature of the pumped liquid shall be 40oC (104oF), and intermittently up to 50oC (122oF). The motor shall be capable of handling up to 15 evenly spaced starts per hour without overheating. The service factor (as defined by the NEMA MG1 standard) shall be a minimum of 1.2. The motor shall have a voltage tolerance of +/- 10% from nominal, and a phase to phase voltage imbalance tolerance of 1%. The motor shall be FM and CSA approved for use in NEC Class I, Division I, Groups C & D hazardous locations. The surface temperature rating shall be T3C.

The motor shall be capable of operating completely submerged, at full rated power continuously without the need for de-rating or reduced duty cycle. It shall be self cooling via the process fluid surrounding the motor. The motor shall have a NEMA Class A temperature rise

Thermal Protection: Each phase of the motor shall contain a normally closed bi-metallic temperature monitor switch imbedded in the motor windings. These thermal switches shall be connected in series and set to open at 140oC +/- 5oC (284oF). They shall be connected to the control panel, and used in conjunction with, and supplemental to, external motor overload protection.

Mechanical Seals:

Each pump shall be equipped with a tandem mechanical shaft seal system consisting of two totally independent seal assemblies. The seals shall operate in a lubricant reservoir that hydro-dynamically lubricates the lapped seal faces at a constant rate. The lower, primary seal unit, located between the pump and the lubricant chamber, shall contain one stationary industrial duty silicon-carbide seal ring and one rotating industrial duty silicon-carbide seal ring. The stationary ring of the primary seal shall be installed in a seal holding plate of gray cast iron EN-GJL-250 (ASTM A-48, Class 35B). The seal holding plate shall be equipped with swirl disruption ribs to prevent abrasive material from prematurely wearing the seal plate. The upper, secondary seal unit, located between the lubricant chamber and motor housing, shall contain one stationary industrial duty silicon-carbide seal ring, and one rotating one rotating industrial duty silicon-carbide seal ring. Each seal interface shall be held in contact by its own spring system. The seals shall not require routine maintenance, or

adjustment, and shall not be dependent on the direction of rotation for proper sealing. Each pump shall be provided with a lubricant chamber for the shaft sealing system which shall provide superior heat transfer and maximum seal cooling. The lubricant chamber shall be designed to prevent overfilling, and to provide lubricant expansion capacity. The drain and inspection plug shall have a positive anti-leak seal, and shall be easily accessible from the outside of the pump. The seal system shall not rely upon the pumped media for lubrication and shall not be damaged when the pump is run dry. Lubricant in the chamber shall be environmentally safe non toxic material.

The following seal types shall not be considered equal: Seals of proprietary design, or seals manufactured by other than major independent seal manufacturing companies. Seals requiring set screws, pins, or other mechanical locking devices to hold the seal in place, conventional double mechanical seals containing either a common single or double spring acting between the upper and lower seal faces, any system requiring a pressure differential to seat the seal and ensure sealing.

H. Mechanical Seal Protection System:

The primary mechanical seal shall be protected from interference by particles in the waste water, including fibrous materials, by an active Seal Protection System integrated into the impeller and volute, and by the grinder mechanism ahead of the impeller. The back side of the impeller shall be equipped with pump out vanes to eject any fibrous material that attempts to lodge behind the impeller. The volute housing adjacent to the back side pumping vanes of the impeller shall incorporate an outward spiraling groove as described in the "Self Cleaning Wear Plate" section above, to eject solid materials from the mechanical seal area. Fibrous material which attempts to lodge behind the impeller, or wrap around the mechanical seal shall be effectively ejected by the system preventing interference with the mechanical seal. The Seal Protection System shall operate whenever the pump operates, and shall not require adjustment or maintenance in order to function. Grinder pump designs which do not incorporate an active system to protect the primary mechanical seal shall not be considered acceptable for wastewater service.

Seal Failure Early Warning System:

The integrity of the mechanical seal system shall be continuously monitored during pump operation and standby time. An electrical probe shall be provided in a sensing chamber positioned between the primary and secondary mechanical seals for detecting the presence of water contamination within the chamber. The sensing chamber shall be filled with environmentally safe non toxic oil. A solid-state relay mounted in the pump control panel or in a separate enclosure shall send a low voltage, low amperage signal to the probe, continuously monitoring the conductivity of the liquid in the sensing chamber. If sufficient water enters the sensing chamber through the primary mechanical seal, the probe shall sense the increase in conductivity and signal the solid state relay in the control panel. The relay shall then energize a warning light on the control panel, or optionally, cause the pump shut down. This system shall provide an early warning of mechanical seal leakage, thereby preventing damage to the submersible pump, and allowing scheduled rather than emergency maintenance. Systems utilizing float switches or any other monitoring devices located in the stator housing rather than in a sensing chamber between the mechanical seals are not considered to be early warning systems, and shall not be considered equal.

Shaft:

The pump shaft and motor shaft shall be an integral, one piece unit adequately designed to meet the maximum torque required at any normal start-up condition or operating point in the system. The shaft shall have a full shutoff head design safety factor of 1.7, and the maximum shaft deflection shall not exceed .05 mm (.002 inch) at the lower seal during

normal pump operation. Each shaft shall be stainless steel 1.4021 (AISI 420) material, and shall have a polished finish with accurately machined shoulders to accommodate bearings, seals and impeller. Carbon steel, chrome plated, or multi piece welded shafts shall not be considered adequate or equal.

Bearings:
Each pump shaft shall rotate on high quality permanently lubricated, greased bearings. The upper bearing shall be a deep grooved ball bearing and the lower bearings shall be a heavy duty double row angular contact ball bearing. Bearings shall be of sufficient size and properly spaced to transfer all radial and axial loads to the pump housing and minimize shaft deflection. L-10 bearing life shall be a minimum of 50,000 hours at flows ranging from ½ of BEP flow to 1.2 times BEP flow (BEP is best efficiency point). The bearings shall be manufactured by a major internationally known manufacturer of high quality bearings, and shall be stamped with the manufacturer's name and size designation on the race. Generic or unbranded bearings from other than major bearing manufacturers shall not be considered acceptable.

Power Cable:
The power cables shall be sized according to NEC and CSA standards and shall be of sufficient length to reach the junction box without requiring splices. The outer jacket of the cable shall be oil and water resistant, and shall be capable of continuous submerged operation underwater to a depth of 65 feet.

Cable Entry System:
The cable entry system shall consist of submersible plug assembly which allows the cable be easily disconnected from the pump for service or replacement. Cable sealing shall be accomplished by a Nitrile compression grommet with both cylindrical and conical sealing surfaces, flanked by a stainless steel washer and an integrated strain relief. A brass (C3604) compression nut shall be threaded into to the cast iron EN-GJL-250 (ASTM A-48, Class 35B) cable plug housing, compressing the grommet ID to the cable while the grommet OD seals against the bore of the cable entry housing. Cable conductors shall be terminated in copper pin connectors which are separated and retained by a circular pin retainer fabricated from high dielectric strength Polyamid (30% GF). Each pin shall pass through its own hole in the pin retainer, maintaining perfect alignment with the mating pins in the motor body. The corresponding motor body pin assembly shall be manufactured from high dielectric strength Polyamid (30% GF), with copper connector pins. The pin assembly shall be sealed with an o-ring to prevent water entry into the motor, and retained in the motor housing bore via a retaining ring. Attachment of the plug assembly to the motor shall engage the corresponding copper pins, creating a complete circuit between the motor and cable. The plug assembly shall be fastened with stainless steel fasteners, and shall be sealed by an o-ring.

The cable plug and sealed entry system as part of the motor shall be FM and CSA approved for use in NEC Class I, Division I, Groups C & D hazardous locations. The system shall be anti wicking by design, and shall prevent any water that enters the cable through damage to the jacket from entering the motor. Cable entry designs which utilize potting compounds to provide a water tight seal, or those which do not allow the cable to be easily changed in the field shall not be considered equal.

315.2.6 Pump Station Controls.

A. CONTROL SEQUENCE OF OPERATION
The system shall ultimately use three alternating VFDs. The Orenco LS Controller shall monitor and control the pumps using a pressure transducer and back-up float switches.

A local color touchscreen interface is provided for system status, data and parameter adjustment.

B. Control Panel
Complying with UL 698A, with weatherproof enclosure, covered compartments sized to accommodate controllers, circuit breakers, transformers, alternators, and programmable logic controller. Basis of Design Product: Orenco Systems, Inc., OLS Custom Panel;
1. NEMA 3R Steel Enclosure w/Cooling Fan & Heater;
2. Orenco LS Controller;
3. Color Touchscreen HMI;
4. 460VAC Variable Frequency Drive For Each Pump;
5. Motor Circuit Breaker For Each Pump;
6. Main Circuit Breaker;
7. Control Transformer With Primary Fusing;
8. Controls Circuit Breaker;
9. HOA Switches (one per pump);
10. Temperature Sensor Input Terminals;
11. Seal Fail Sensors (one per pump);
12. 80db Audible Alarm with Push-to-Silence;
13. Flashing Alarm Beacon Light;
14. Control Relay For Remote Alarm Dry Contact;
15. Terminal Blocks as required;
16. UL698a Listed.

C. LEVEL CONTROL SYSTEM
Shall be a pressure transducer with 1 back up floats. The pressure transducer shall be Keller America Level Rat or Pre-approved Equal. The back-up float shall be an internally weighted non-mercury spdt float.

315.2.7 Piping And Valves.

A. DUCTILE-IRON, MECHANICAL-JOINT PIPE AND FITTINGS
1. Ductile-Iron Pipe: AWWA C151/A21.51, with mechanical-joint bell and plain spigot end unless flanged ends are indicated;
   a. Provide flanged ends within well and vault. All flanged fittings are to have stainless steel hardware;
2. Ductile-Iron Fittings: AWWA C110/A21.10, mechanical-joint, ductile- or gray-iron standard pattern or AWWA C153/A21.53, ductile-iron compact pattern;
3. Glands, Gaskets, and Bolts: AWWA C111/A21.11, ductile- or gray-iron glands, rubber gaskets, and stainless steel bolts;
4. Application: Buried service between well and vault.

B. SWING CHECK VALVES
The valve body and cover shall be constructed of ASTM A536 Grade 65-45-12 ductile iron VAL-MATIC SWINGFLEX CHECK VALVE or Pre-approved Equal.

C. ECCENTRIC PLUG VALVES
The valve body and cover shall be constructed of ASTM A126 Class B cast iron for working pressures up to 175 psig Direct and 100 Reverse. The words "SEAT END" shall be cast on the exterior of the body seat end. VAL-MATIC CAM-CENTRIC PLUG VALVE w/ Handwheel or pre-approved equal.

315.3 EXECUTION.

315.3.1 Precast Concrete Structures.

A. Install precast concrete structure sections with sealants per ASTM C 891.

315.3.2 Field Quality Control.

A. Perform tests and inspections and prepare test reports;
   1. Manufacturer's Field Service: Engage a pump station manufacturer's authorized service representative to assist in testing and startup;
B. Tests and Inspections:
   1. Test completed piping systems according to requirements of authorities having jurisdiction. Submit reports;
   2. After installing wastewater pumping stations and after electrical circuitry has been energized, test pumps and controls for compliance with requirements;
   3. After electrical circuitry has been energized, start units to confirm the station can run at pre-specified design parameters;
   4. Test piping for leaks and defects;
   5. Test and adjust controls and safeties;
C. Remove and replace components of the wastewater pumping stations that do not pass tests and inspections and retest as specified above.

APPENDIX I

CITY OF TORRANCE PUBLIC WORKS AGREEMENT; PERMIT AND BUSINESS LICENSE; AND HYDRANT METER APPLICATION

City of Torrance, Community Development Department

Permit Application Form

3031 TORRANCE BLVD. • TORRANCE, CA 90503

OWNER/APPLICANT INFORMATION

Name: _____

Address: _____

City/State: _____

Zip: _____

Phone: _____

Evacuation permits will not be issued without USA I.D. number.

Underground Service Alert
Call 1-800/227-2600

USA I.D. #: _____

CONTRACTOR INFORMATION ON FILE

_____

_____

_____

_____

_____

State License #: _____

Class: _____ Exp. Date: _____

City Business #: _____

Workers Comp. #: _____

Exp. Date: _____

JOB LOCATION/ADDRESS

(or closest street address)

Please list cross streets: _____

_____

DESCRIPTION OF WORK

_____

_____

Lin/Ft Trench _____ Width of Trench _____ Lin/Ft Curb & Gutter _____

Lin/Ft Bore _____ Sewer Connection _____ Number of Curb Drains _____

Sq/Ft Asphalt _____ Sq/Ft Concrete _____ Sq/Ft Dirt _____

Work Order Number *(for utility companies)*: _____

Applicant or Authorized Signature: _____

For further permit information, please call 310/618-5898 or Fax 310/618-2846.

Contractor Qualification List

Curb/Gutter ..... A(General Engineering)
C8(Concrete Contractor)

Driveways ..... A(General Engineering)
C8(Concrete Contractor)

Sidewalks ..... A(General Engineering)
B(General Building)
C8(Concrete Contractor)

Street/Alley ..... A(General Engineering)
C8(Concrete Contractor)
C12(Earth and Paving Contractor)

Sewer Lateral ..... A (General Engineering)
C34(Pipeline Contractor)
C42(Sanitation Contractor)

Sewer Mainline ..... A(General Engineering)
C34(Pipeline Contractor)
C42(Sanitation Contractor)

Storm Drains ..... A(General Engineering)
C34(Pipeline Contractor)
C42(Sanitation Contractor)

U/G Utilities ..... A (General Engineering)
(Water, Gas or Oil) C34 (Pipeline Contractor)

U/G Electrical ..... A (General Engineering)
C8 (Concrete Contractor)
C12 (Earth and Paving Contractors)

Contractor Qualification List

1) FOR INSPECTIONS 24 hour notice is required, before, during, and after construction. Call 310-618-5898, 7:30 AM – 5:30 PM, to SCHEDULE AN INSEPCTION.

2) Provide TRAFFIC CONTROL per the "CITY OF TORRANCE CONSTRUCTION TRAFFIC CONTROL PROCEDURES." Street closures shall be per City of Torrance Standard T603. Major street lane closures between 8:30 AM – 3:30 PM only. ONE STANDARD ARROWBOARD REQUIRED FOR EACH LANE CLOSURE.

3) Permit is not valid until two working days after notifying DIG-ALERT of project. USA # _____ .

4) Do not remove any trees or shrubs without approval of Torrance Tree Supervisor (310-781-6900).

5) Contractor will be billed for overtime inspection services. OVERTIME REQUESTS must be submitted for approval 24 hrs in advance.

6) Construction site CLEANUP and GRAFFITI removal must be completed prior to finaling of this permit. The work site shall be kept in a well maintained condition. Signage shall be free of graffiti, replaced if bent, vandalized or displays loss of reflectivity. Any graffiti on construction signs must be removed or replaced within 24 hours of notification.

7) Any street striping, crosswalk, raised reflective pavement marker or pavement markings damaged by this construction shall be replaced to the satisfaction of the Torrance Public Works Department (310-781-6900).

8) THIS PERMIT WILL BE REVOKED if any pollutant is released into or allowed to remain in any component of the city drainage system.

9) Trench backfill and pavement repairs shall be per City of Torrance Standard T116.

10) Any irrigation system components damaged by this construction shall be replaced to the satisfaction of Park Services (310-618-2930).

11) All survey monuments in the project area MUST be located and tied out and a Corner Record filed prior to the start of construction. Also, all destroyed monuments must be replaced prior to receiving final inspection.

12) It is the responsibility of the contractor to REPLACE any PAVEMENT removed by this construction.

13) The City of Torrance is held harmless from the results of any action or accidents caused by the permittee, his employees, or equipment in the performance of the work described or covered in this permit. Validation of this permit SHALL NOT be held to permit or to be an approval of the violation of any applicable provision of the City Code covering this work, or any other provisions of the City of Torrance Code. In the granting of a Construction & Excavation permit, the Community Development Director may impose such conditions thereon, in addition to those otherwise provided herein, as are reasonably necessary to prevent the proposed operations from being conducted in such a manner as to constitute or create a HAZARD TO LIFE or property or be detrimental to property.

NOTICE
CITY OF TORRANCE
COMMUNITY DEVELOPMENT DEPARTMENT/
ENGINEERING DIVISION
NEW INSURANCE REGULATIONS

The City of Torrance Community Development Department/Engineering Division will be requiring proof of liability insurance from each contractor applying for a Construction & Excavation permit to work in the public right-of-way or in a public easement beginning October 1, 2001. Insurance shall cover contractor and vehicles used in the construction. The attached requirements dated September 20, 2001 will detail the insurance limits.

All insurance certificates shall have an additional clause that states: ***"The City of Torrance, the City Council and each member thereof, members of boards and commissions, every officer, agent, official, employee and volunteer"*** as additional insured.

Contractors should bring in proof of insurance at the time of application for permit. For major companies that are self-insured, a letter stating this fact and signed by an officer of the firm will be acceptable. Annual insurance may also be kept on file for contractors working periodically within the City of Torrance.

If you have any questions, please contact the Engineering Division Permit Counter at 310-618-5898.

JEFFERY W. GIBSON
Community Development Director
City of Torrance

EFFECTIVE 8/11/03

8/11/03

CITY OF TORRANCE
COMMUNITY DEVELOPMENT DEPARTMENT/
ENGINEERING DIVISION

PERMIT APPLICATION FORM
INSURANCE REQUIREMENTS

Any entity performing work on City streets, right-of-way, and property must comply with the following requirements.

1. TYPE OF INSURANCE

Any entity performing work must maintain at their sole expense the following insurance, which shall be full coverage not subject to self-insurance provisions.

- General Liability including coverage for premises, products and completed operations, underground hazards, independent contractors, personal injury and contractual obligations with combined single limits of at least $1,000,000 per occurrence.
- Automobile Liability, including owned, non-owned and hired vehicles, with at least the following limits of liability:
  - Primary Bodily Injury with limits of at least $500,000 per person, $1,000,000 per occurrence AND; Primary Property Damage with limits of at least $500,000per occurrence, OR
  - Combined single limits of at least $1,000,000 per occurrence.
- Workers' Compensation with limits as required by the State of California and Employer's Liability with limits of at least $1,000,000.

2. CERTIFICATES

- Certificates or an attached endorsement must be provided that contains the following provisions:
  - The City of Torrance, the City Council and each member thereof, members of boards and commissions, every officer, agent, official, employee and volunteer must be named as additional insured under the automobile and general liability policies.
  - The insurance policies required by this clause shall contain a provision that no termination, cancellation or change of coverage can be made without 30 days written notice to the City.

3. FILING REQUIREMENTS

- Certificates of insurance and/or endorsements must be provided to the Community Development Department, Permits and Records Section, 3031 Torrance Blvd., Torrance, CA 90503, prior to the issuance of the permit.

4. ADDITIONAL REQUIREMENT

- Insurance required of any entity performing work will be satisfactory only if issued by companies rated "B+" or better in the most recent edition of Best's Key Rating Guide, and only if they are of a financial category of a VII or better, unless these requirements are modified or waived by the City's Risk Manager.

Please call the Business License Office at 310-618-5923 for fee amounts. Payment must be submitted with your application.

FOR OFFICIAL USE ONLY

1. LICENSE NO. | 2. CATEGORY NO.

HOME OCCUPATION | HEALTH PERMIT | S.I.C. CODE

City of Torrance, Revenue Division

Business License Application

3031 Torrance Boulevard, Torrance, California 90503 • 310/618-5828

PART I. APPLICANT TO ANSWER ALL QUESTIONS IN THIS SECTION (print or type)

3. BUSINESS NAME OR DBA | 4. CORPORATE NAME (IF DIFFERENT FROM ABOVE)

5. BUSINESS ADDRESS | SUITE # | CITY | STATE | ZIP

6. MAILING ADDRESS | SUITE # | CITY | STATE | ZIP

7. NATURE OF BUSINESS (state type of business being conducted at this location) | 8. NO. OF PERSONS WORKING AT LOCATION | 9. BUSINESS PHONE

10. NAME OF PERSON MAKING APPLICATION (must be an owner, partner or corporate officer) | 11. TITLE | 12. HOME PHONE

13. RESIDENCE ADDRESS | CITY | STATE | ZIP | 14. DRIVER'S LICENSE NO. | 15. STATE SALES TAX NO.

16. STATE CONTRACTOR'S LICENSE NO. | 17. SQUARE FOOTAGE | 18. SOCIAL SECURITY NO. | 19. FEIN NO. | 20. SEIN NO.

21. OWNERSHIP INFORMATION ☐ PARTNERSHIP ☐ CORPORATION ☐ SOLE OWNERSHIP

NAMES OF OWNER, PARTNERS, OR PRINCIPAL OFFICERS	TITLE	HOME ADDRESS	HOME PHONE

I declare that I am the owner, partner, corporate officer or person with the power of attorney, and I understand if all the information provided above is not the true the business license being applied for may be revoked as outlined in section 31.9.10 of the Torrance Municipal Code

I am duly authorized to make this application and all of the information provided in this application is true and correct. The business will not provide any service, good or product which is illegal under Federal, State, or Local Laws. I declare under penalty of perjury that the foregoing is true and correct.

SIGNATURE _____ DATE _____

PART II. FOR OFFICIAL USE ONLY

BASIC FEE | APPLICATION SENT FOR ZONING? ☐ YES ☐ NO | PROCESSING FEE | FIRE INSP. FEE | OTHER

PER PERSON FEE | OTHER (cont'd)

PENALTY FEE | HOLD ☐ YES ☐ NO | ENT. FEE | CANCELLATION FEE

RECEIVED BY | DATE | CHECK NO. | BANK NO. | CASH | TOTAL AMOUNT $

This form can be printed from our website at http://www.torrnet.com/416.htm.

City of Torrance Utilities – Hydrant Meter Application

For hydrant meter service, please contact the City of Torrance Utilities Customer Service Center at 1-855-354-5623 during normal business hours, Monday through Friday from 7:30 am to 5: 30 pm PT. Please be prepared to provide the information requested below to the representative.

Alternatively, you may also submit the form directly to our Customer Service Center electronically. Upon receipt, a Customer Service Representative will contact you to confirm your information and provide account details.

A $1,500.00 deposit is due upon opening of the account and a customer account number is required in order to make a payment online or locally. Hydrant meters are not issued until the deposit is paid in full. Payment options are below:

By phone:
1-855-354-5623
Customer Service Department
Credit/Debit Card* or Check
Monday – Friday
7:30 am – 5:30 pm

Online: www.TorranceCA.gov/utilitybilling
UtilityDirect Online Account
Credit/Debit Card* or Check
Anytime
24/7

In person:
City of Torrance City Hall
Treasury Department
3031 Torrance Blvd
Torrance CA 90503

Cash, Check, Credit/Debit Card*
Monday – Friday (closed alternating Fridays)
7:30 am – 5:30 pm

**There is a 2.8% processing fee for all credit/debit card transactions processed.*

Hydrant Meter location _____ **Zip** _____
(Service Address)

Service Begin Date: _____ **Name on Account:** _____

Contact Person: _____

Phone Number: _____ **Secondary Number:** _____

Email Address: _____

Mailing Address: _____

_____

_____
(City) (ST) (Zip)

Please note that all hydrant meter installations require approval from Engineering - Permits and Records. to schedule an appointment to receive an Atlas Number, Section Number and Hydrant Number.

APPENDIX II

CONSTRUCTION & DEMOLITION WASTE MANAGEMENT PLAN (WMP)

Building Permit Number: _____

CITY OF TORRANCE

Construction & Demolition Waste Management Plan (WMP)

THE REQUIREMENT IS TO REUSE OR RECYCLE AT LEAST 50% OF PROJECT WASTE AND 100% OF EXCAVATED SOIL AND LAND-CLEARING DEBRIS

1) As part of your application, you must complete the front and back of this page and the "estimate" or left side of the table on the backside of this page to the best of your ability, indicating that you will recycle at least 65% of the waste from the project and 100% of excavated soil and land-clearing debris.

2) As your project proceeds, collect and keep receipts of all waste disposed, recycled, reused or donated. Receipts must show material type, weight of material, how the material was treated and the facility used.

3) To final your project, you must then fill out the "actual" or right side of the table on the backside of this sheet, and submit it again with all the receipts to verify that at least 65% of the project's waste and 100% of excavated soil and land-clearing debris was diverted from the landfills.

Please note, if you are contracting with a different company to haul your waste or using a roll off box from another company, that company must have a business license to operate in the City of Torrance.

A COPY OF THIS WMP AND RECEIPTS (SHOWING MATERIAL TYPE, WEIGHT, TREATMENT AND FACILITY USED) FOR ALL RECYCLING AND DISPOSAL SHALL BE SUBMITTED BEFORE THE PROJECT WILL RECEIVE FINAL BUILDING APPROVAL. (FOR DEMO PERMITS, THE RECEIPTS FOR THE DEMOLITION WASTE SHOULD BE PROVIDED BEFORE THE FIRST FOOTING INSPECTION AFTER THE BUILDING PERMIT HAS BEEN ISSUED.)

Project Name: _____

Location: _____

Requesting Infeasibility Exemption: ☐ Yes ☐ No

Contractor Name: _____ **Contact Name:** _____

Address: _____ **Contact Phone:** _____

Recycler: _____ **Recycler Contact:** _____

Recycler Address: _____ **Recycler Contact Phone:** _____

CITY USE ONLY

	Application (Date)	Final (Date)
Approved		
Further explanation needed (see attached)		
Denied		
Infeasibility Exemption Approved		
Reviewed By		

Submit this form and the attached Waste Management Plan Table to: **WMP Compliance Official**
Alison Sherman, Public Works
asherman@TorranceCA.Gov
Fax: 310-781-6902

For questions or for in-person visit (by appointment only), please call 310-781-6900

CITY OF TORRANCE

Construction & Demolition Waste Management Plan Table

Project Name: _____

Total Estimated Waste Generated by Project: _____ (in tons).
(Ask your hauler, recycler or site cleanup vendor to assist you. Use receipts from your previous jobs for estimates)

Complete and return with Building Permit Application			**Complete and return with receipts prior to final building approval**		
Material Type	Estimated Reused/ Recycled	Estimated Disposed/ Landfilled	Actual Reused/ Recycled	Actual Disposed/ Landfilled	Vendor or Facility Used (Destination)
	(In Tons)	(In Tons)	(In Tons)	(In Tons)	
Asphalt & Concrete					
Bricks/Masonry/Tiles					
Building Materials (doors, windows, fixtures, etc.)					
Cardboard					
Excavated dirt and land-clearing debris					
Dirt					
Landscape Debris (Plant & Tree Trimmings)					
Scrap Metal					
Unpainted Wood & Pallets					
Other (painted wood & drywall, roofing, etc.)					
Mixed C&D*					
Trash/Garbage					
TOTAL					

If you are requesting an infeasibility exemption and the estimated amount reused/recycled is less than 50%, please explain why (attach additional sheets if necessary):

_____

_____

_____

Prepared by (print): _____ Date: _____

Signature: _____ Phone Number: _____

Must be signed by Contractor or Owner. Signatory accepts financial responsibility for penalties for non-compliance.

_____

* *Mixed C&D* is defined as a mixture of three or more materials (e.g. wood, drywall, roofing, etc.) from construction or demolition sites that will be taken to a facility capable of recycling those commingled materials.

Conversion Rates

The following conversion rates are estimates to help complete the Waste Management Plan by converting materials into tonnage format. The ranges vary widely, depending on how the materials are handled (compacted, loose, chipped, etc.). Use the conversion factors and receipts from any previous projects to help you estimate the potential amount of materials and diversion. Take into consideration the type and load of vehicles that will be used to haul the materials. Ask your hauler or recycler to assist you in estimating these numbers.

Material	Lbs/cy	Tons/cy
Asphalt	1,400 lbs/cy	0.7 tons/cy
Brick	2,430 lbs/cy	1.21 tons/cy
Cardboard	100 lbs/cy	0.05 tons/cy
Concrete	2,600 lbs/cy (Sources range from 1,000 to 4,000)	1.3 tons/cy
Dirt/Soils	2,660 lbs/cy	1.33 tons/cy
Drywall	700 lbs/cy	0.35 tons/cy
Wood (chipped)	300 - 650 lbs/cy	0.15 – 0.3 tons/cy
Mixed C&D Debris	900 lbs/cy	0.45 tons/cy
Mixed Waste/Trash	100 - 350 lbs/cy	0.5 - 0.175 tons/cy

APPENDIX III

CITY OF TORRANCE STANDARD DRAWINGS

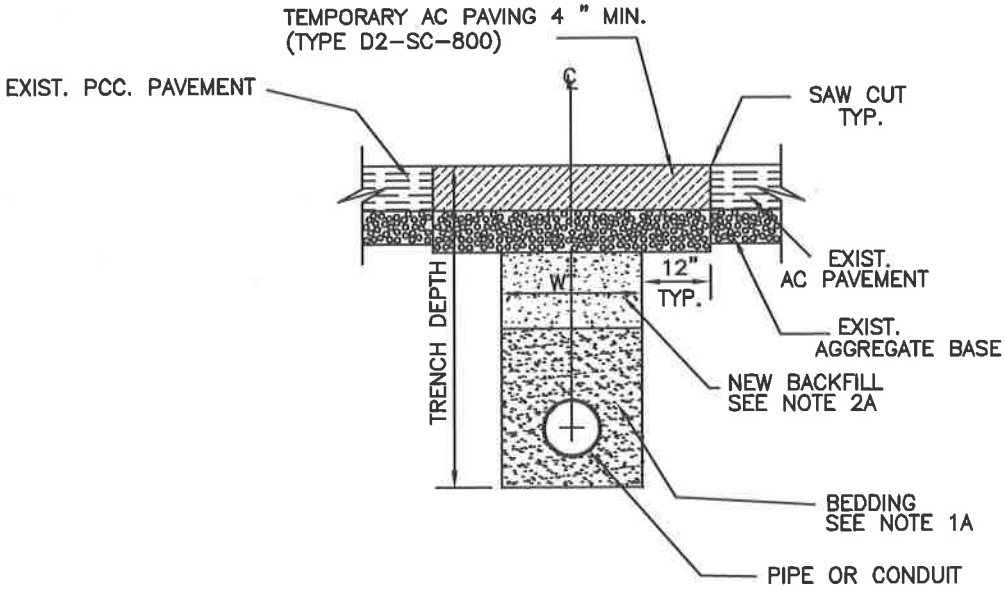

TEMPORARY ASPHALT REPAIR

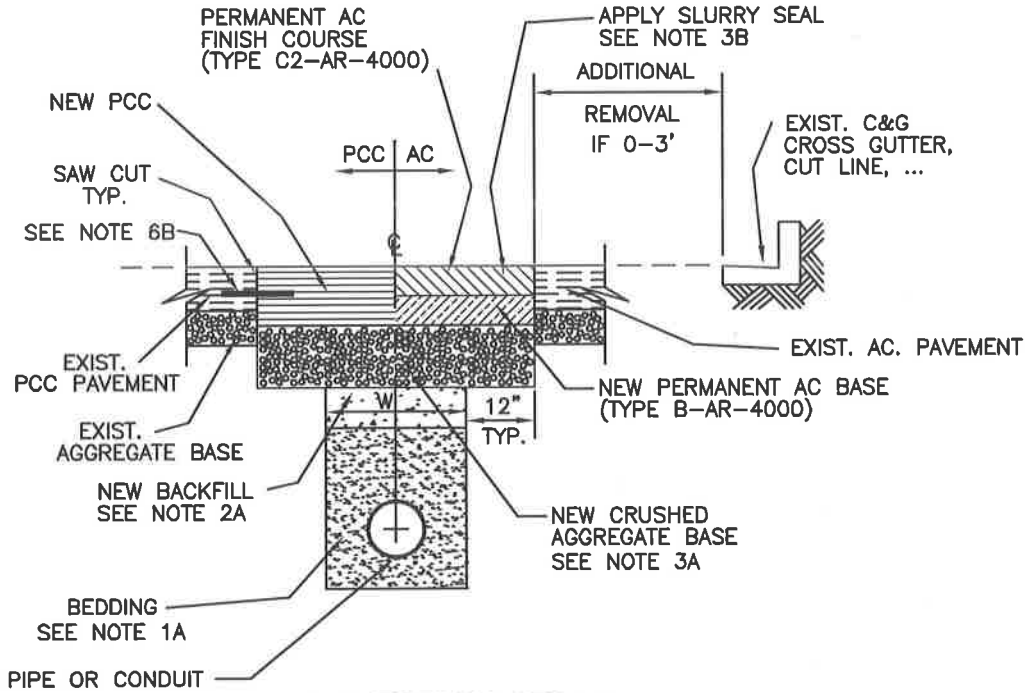

PERMANENT TRENCH REPAIR

TYPICAL TRENCH SECTION WITHIN ROADWAY
(SEE NOTE 8C FOR EXCEPTION)

CITY OF TORRANCE - ENGINEERING DEPARTMENT

DATE ISSUED	TRENCH BACKFILL & PAVEMENT REPAIRS	STANDARD NO.
10 SEP 2002	RICHARD W. BURTT ENGINEERING DIRECTOR R.C.E. NO. 32862 R.T.E. NO. 1538	T116-2
		SHEET 1 OF 4

TT\T116-2

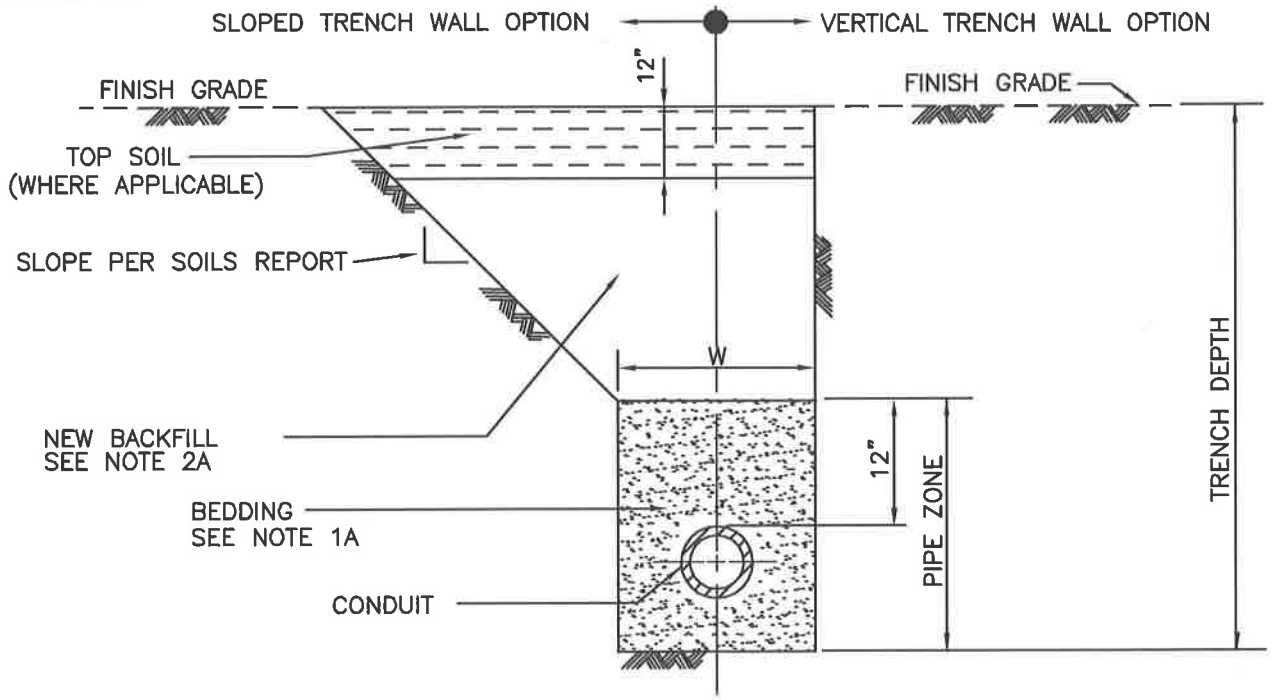

TYPICAL TRENCH SECTION OUTSIDE ROADWAY

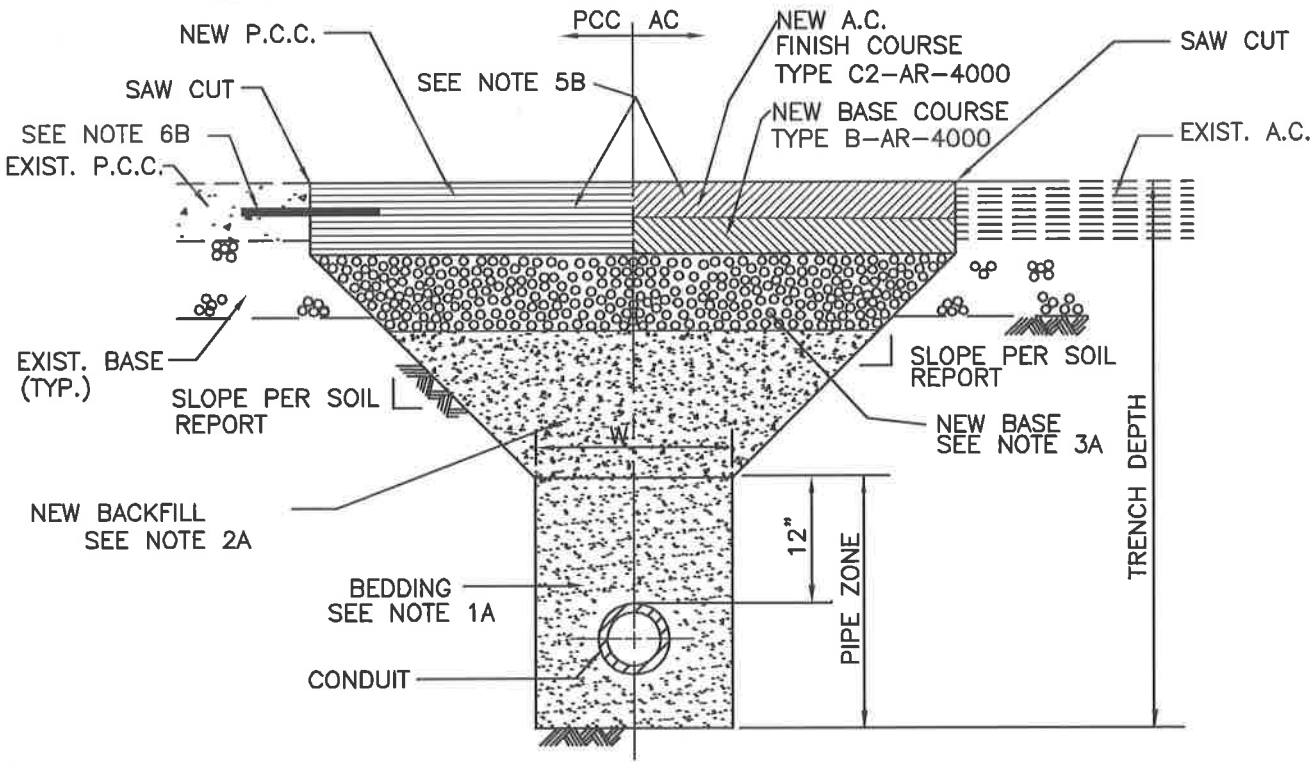

TYPICAL TRENCH SECTION WITHIN ROADWAY
SLOPED TRENCH WALL OPTION

CITY OF TORRANCE - ENGINEERING DEPARTMENT

DATE ISSUED	TRENCH BACKFILL & PAVEMENT REPAIRS	STANDARD NO.
10 SEP 2002	RICHARD W. BURTT ENGINEERING DIRECTOR R.C.E. NO. 32862 R.T.E. NO. 1538	T116-2
		SHEET 2 OF 4

TT\T116-2

NOTES:

BELOW GROUND:

1A. SEE STD. PLAN NO'S T204, T302, AND T701 FOR BEDDING REQUIREMENTS.

2A. FOR TRENCHES WITH "W" GREATER THAN 2' OR IF TRENCH WALLS ARE SLOPED, BACKFILL SHALL BE CRUSHED AGGREGATE BASE, OR NATIVE OR OTHER EXCAVATION MATERIAL WITH AN SE VALUE OF 30 OR GREATER. BACKFILL MATERIAL SHALL BE DENSIFIED TO A RELATIVE COMPACTION OF 95% IN THE UPPER 3 FEET AND TO 90% BELOW THE UPPER 3 FEET. FOR TRENCHES LONGER THAN 200' OR LARGER THAN 1,000 SQUARE FEET A LICENSED SOILS ENGINEER SHALL BE PRESENT TO MONITOR THE NATIVE OR IMPORTED BACKFILL OPERATION AND TEST FOR COMPACTION AT 100' OR 200 SQUARE FOOT MAXIMUM INTERVALS

FOR TRENCHES WITH "W" LESS THAN OR EQUAL TO 2' IN THE ROADWAY, A SAND-CEMENT SLURRY (100-E-100) BACKFILL SHALL BE USED. SLURRY SHALL CURE 16 HOURS MINIMUM PRIOR TO BASE PLACEMENT. RAPID SET CEMENT SLURRY SHALL CURE 1 HOUR MINIMUM PRIOR TO BASE PLACEMENT.

IN AREAS NOT IN EXISTING ROADWAY, BACKFILL SHALL BE COMPACTED TO A RELATIVE COMPACTION OF 90%.

3A. NEW CRUSHED AGGREGATE BASE SHALL BE 2" THICKER THAN EXISTING BASE, BUT NOT LESS THAN 8" THICK.

4A. EXCAVATED MATERIAL NOT APPROVED FOR USE IN TRENCH BACKFILL SHALL BE REMOVED FROM JOB SITE UNLESS OTHERWISE USED IN THE WORK.

5A. WHERE WET, UNSTABLE OR RUNNING SOIL IS ENCOUNTERED, SOLID SHEATHING IS REQUIRED FOR ALL VERTICAL TRENCH WALLS.

6A. ANY SHORING REQUIRED SHALL BE DESIGNED BY A REGISTERED CIVIL OR STRUCTURAL ENGINEER.

7A. "W" SHALL BE MEASURED AT TOP OF BEDDING.

VISIBLE SURFACE:

1B. IF REMAINING AC PAVEMENT BETWEEN EDGE OF TRENCH AND EXISTING GUTTER, CURB, CROSS GUTTER, OR CUT LINE IS LESS THAN 3 FEET IN WIDTH, THEN THIS AC SHALL BE REMOVED AND REPLACED WITH NEW AC PAVEMENT.

2B. THE ENGINEER MAY REQUIRE WIDER REMOVAL AREA THAN THAT SHOWN ABOVE TO SUIT FIELD CONDITIONS.

3B. CRACKS SHALL BE SEALED AND A TYPE 2 SLURRY SEAL COATING WITH 2% LATEX SHALL BE APPLIED FROM LANE LINE TO LANE LINE FOR LONGITUDINAL TRENCHES GREATER THAN 200' IN LENGTH FOR ANY LANE AFFECTED.

4B. THE THICKNESS OF REPLACEMENT ASPHALT SHALL BE A MINIMUM OF 1" GREATER THAN EXISTING AC (2" GREATER IF EXISTING STREET IS PAVED WITH RUBBERIZED AC) BUT NOT LESS THAN 4" (5" FOR RUBBERIZED AC). IF EXISTING PAVEMENT IS PCC, REPLACEMENT CONCRETE SHALL BE AS PER SECTION 201.1 OF THE STANDARD SPECS AND 1" THICKER THAN EXISTING.

5B. THE NEW FINISH COURSE SHALL BE PLACED FLUSH WITH THE EXISTING ADJACENT PAVING SURFACE – MAXIMUM VARIANCE FROM FLUSH IS 1/8". NEW AC PAVEMENT ADJACENT TO EXISTING EDGE OF PCC GUTTER SHALL BE 3/8" HIGHER THAN EDGE OF GUTTER.

6B. FOR PCC ROADWAY PAVEMENT, DOWEL AT 24" O.C., #4 DEFORMED BAR, 6" EMBEDMENT, AND CENTERED IN EXISTING SLAB WITH 1–1/2" MINIMUM CONCRETE COVER. DOWEL SHALL BE EPOXIED IN EXISTING SLAB AND CAST IN NEW SLAB.

METHODOLOGY:

1C. AT THE END OF EACH WORK DAY, ANY TRENCH IN AN ARTERIAL OR IN ROLLING HILLS ROAD, MAPLE/235TH ST. OR ARLINGTON AVE. SHALL BE COVERED BY NON–SKID STEEL PLATES OR BE PAVED WITH TEMPORARY OR PERMANENT PAVEMENT FLUSH WITH ADJACENT PAVEMENT SURFACES. WHEN NON–SKID STEEL PLATES ARE USED, THEY SHALL BE WELDED, SECURED IN PLACE, RAMPED WITH AC, AND NOT USED FOR MORE THAN 48 CONSECUTIVE HOURS ON THE SAME SEGMENT OF TRENCH. "PLATE AHEAD" SIGN SHALL BE PROPERLY INSTALLED WHEN PLATES ARE IN USE. OTHER CITY STREETS MAY HAVE LESSER REQUIREMENTS AND WILL BE CONSIDERED ON A CASE BY CASE BASIS.

2C. ALL TRAFFIC LANES SHALL BE CLEANED AND RESTORED FOR USE IMMEDIATELY UPON PLACEMENT OF TEMPORARY AC PAVEMENT, TRENCH PLATES AND/OR FINAL AC PAVEMENT.

3C. ALL TRAFFIC STRIPING AND/OR MARKINGS REMOVED OR DAMAGED DURING CONSTRUCTION SHALL BE REPLACED IN KIND AS DIRECTED BY THE ENGINEER.

4C. TRAFFIC CONTROL SHALL BE PER CITY OF TORRANCE "CONSTRUCTION TRAFFIC CONTROL PROCEDURES ON CITY STREETS" AVAILABLE FROM THE ENGINEERING DEPARTMENT PERMIT COUNTER.

5C. MORITORIUM FOR CUTTING NEW OR RECONSTRUCTED STREETS IS 5 YEARS WITHOUT SPECIAL APPROVAL FROM THE ENGINEERING DIRECTOR. NEW UTILITY SERVICE CONNECTIONS AND SERVICE LINE REPAIRS ARE EXCEPTED IF NOT ABLE TO BE FORSEEN AT THE TIME THE ROADWAY WAS RECONSTRUCTED. APPROVED LONGITUDINAL EXCAVATIONS IN NEW STREETS SHALL REQUIRE THE FULL LANE TO BE GROUND AND OVERLAID.

6C. SLURRY SEALING OF TRENCH AREA MAY BE OMITTED IF PROJECT IS COORDINATED WITHIN ONE YEAR OF A CITY STREET REHABILITATION OR SLURRY SEAL PROJECT.

7C. A COLLECTION DEVICE SHALL BE USED TO COLLECT SEDIMENTS GENERATED DURING SAWCUTTING OPERATION.

8C. TRENCHES WITH "W" LESS THAN 8" WIDE AND LESS THAN OR EQUAL TO 24" DEEP ARE NOT REQUIRED TO USE T–SECTION PAVEMENT CONSTRUCTION, OR APPLY SLURRY SEAL.

9C. ALL PAVEMENT REMOVALS SHALL USE STRAIGHT LINE SAW CUTS A MINIMUM OF 1.5" DEEP.

10C. BORING SHALL BE CONSIDERED AS A CONTINUOUS TRENCH AS FAR AS EXCAVATION REPAIR. POTHOLES LOCATED INTERMITTENTLY WILL NOT BE TREATED AS SEPARATE EXCAVATIONS BUT AS A CONTINUOUS EXCAVATION. THE CITY SHALL RESERVE THE RIGHT TO REQUIRE BORING OR OPEN TRENCH AS THE SITUATION MAY ARISE.

PROJECTS UNDER CONSTRUCTION

URBAN RUNOFF REQUIREMENTS

ALL PROJECTS UNDER CONSTRUCTION IN THE CITY OF TORRANCE MUST FOLLOW SPECIFIC BEST MANAGEMENT PRACTICES, OR BMPS. BMPS INSURE THAT HAZARDOUS MATERIALS, POLLUTANTS AND OTHER ITEMS ARE CONTAINED ON SITE AND DO NOT GET WASHED OR DUMPED INTO THE STORM DRAIN SYSTEM. THE BMPS IN THE LIST BELOW ARE REQUIRED BY CITY CODE SECTION 411.1. BMPS MUST BE PUT INTO PRACTICE AT THE START OF ANY CONSTRUCTION ON PRIVATE PROPERTY OR IN THE PUBLIC RIGHT OF WAY THAT MAY IMPACT THE DRAINAGE SYSTEM. BMPS MUST BE FULLY IMPLEMENTED UNTIL ALL WORK THAT MAY IMPACT THE DRAINAGE SYSTEM HAS BEEN COMPLETED.

THE CONTRACTOR IS SOLELY RESPONSIBLE, AT ITS EXPENSE, TO PROVIDE ALL LABOR, TOOLS, MATERIALS, EQUIPMENT AND DEVICES NECESSARY TO IMPLEMENT ALL BMPS TO THE SATISFICATION OF THE COMMUNITY DEVELOPMENT AND PUBLIC WORKS DIRECTORS, AND IS NOT PERMITTED TO BEGIN CONSTRUCTION UNTIL SUCH ITEMS ARE IN PLACE.

BEST MANAGEMENT PRACTICES

(BMPS)

1. RUNOFF CONTAINING SEDIMENT, OIL, GREASE AND CONSTRUCTION WASTE FROM CONSTRUCTION SITES AND PARKING AREAS MUST NOT LEAVE THE SITE OR ENTER ANY ON-SITE STORM DRAIN.
2. ANY SEDIMENT OR OTHER MATERIALS WHICH ARE TRACKED OFF THE SITE MUST BE CLEANED AND REMOVED THE SAME DAY. WHERE DETERMINED TO BE NECESSARY BY THE DESIGNATED CITY REPRESENTATIVE, A TEMPORARY SEDIMENT BARRIER MUST BE INSTALLED.
3. DURING EMERGENCIES, A PLASTIC COVERING MAY BE USED TO PREVENT EROSION OF AN UNPROTECTED AREA, ALONG WITH DEVICES DESIGNED TO INTERCEPT AND SAFELY DIVERT RUNOFF.
4. EXCAVATED SOIL MUST BE PLACED ON-SITE IN A WAY THAT INSURES THAT THE SOIL WON'T BE WASHED INTO THE STREET OR ADJOINING PROPERTIES.
5. DURING THE RAINY SEASON OR IF CHANCE OF PRECIPITATION EXIST, SOIL PILES MUST BE COVERED UNTIL THE SOIL IS EITHER USED OR REMOVED.
6. WASHING OF CONSTRUCTION OR OTHER INDUSTRIAL VEHICLES IS NOT ALLOWED ADJACENT TO THE CONSTRUCTION SITE. RUNOFF FROM THE WASHING OF VEHICLES ON A CONSTRUCTION SITE IS NOT ALLOWED TO LEAVE THE SITE OR ENTER THE STORM DRAIN.
7. DRAINAGE CONTROLS MUST BE USED AS NEEDED, DEPENDING ON THE EXTENT OF PROPOSED GRADING AND TOPOGRAPHY OF THE SITE.

PENALTIES FOR NON-COMPLIANCE

FAILURE TO IMPLEMENT BEST MANAGEMENT PRACTICES AT CONSTRUCTION SITES SHALL CONSTITUTE A MISDEMEANOR PUNISHABLE BY A FINE AS PER CITY ORDINANCE NO. 3452. EACH DAY THAT A VIOLATION OCCURS SHALL CONSTITUTE A SEPARATE OFFENSE. THE CITY IS ALSO AUTHORIZED TO ABATE VIOLATIONS BY MEANS OF A CIVIL ACTION. CONSTRUCTION SITES ARE SUBJECT TO STOPPAGE OF WORK FOR VIOLATION OF THESE REQUIREMENTS.

VIOLATION OF THESE PROVISIONS ALSO VIOLATE THE REGULATION OF THE NATIONAL POLLUTANT DISCHARGE ELIMINATION SYSTEM (NPDES), CLEAN WATER SECTION 402 AND DIVISION 7 OF THE CALIFORNIA WATER CODE. THE VIOLATOR MAY BE SUBJECTED TO FINES AND/OR IMPRISONMENT AS PER STATE AND/OR FEDERAL STATUTES.

CITY OF TORRANCE		
DATE ISSUED 23 SEP 2009	**NPDES - BEST MANAGEMENT PRACTICES** ROBERT J. BESTE PUBLIC WORKS DIRECTOR R.C.E. NO. 50737	STANDARD NO. **T303** SHEET 1 OF 1

TT/T303

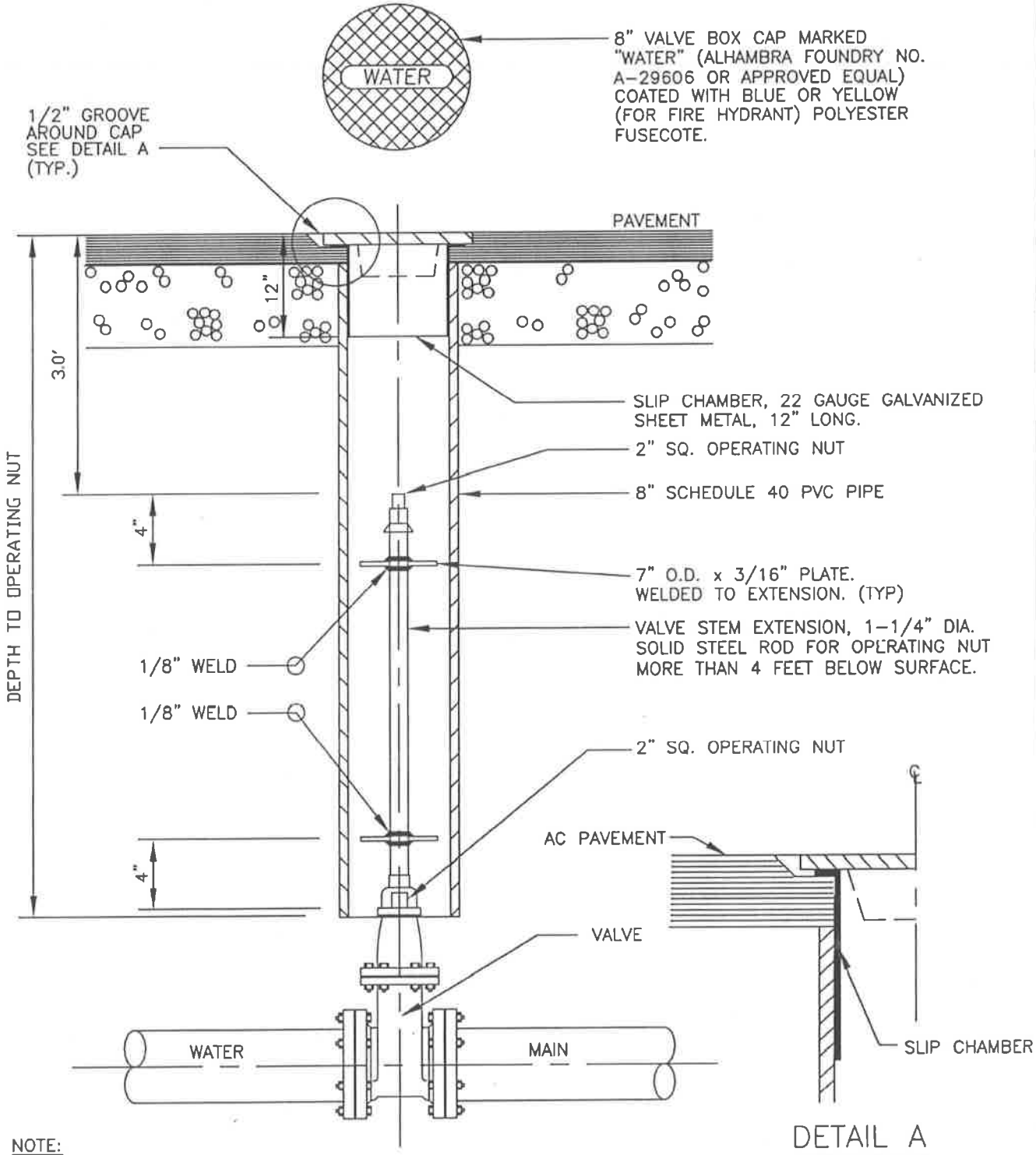

NOTE:

VALVE STEM EXTENSION SHALL BE PROVIDED WHERE DEPTH TO OPERATING NUT EXCEEDS 4'-0".

ACCOMPANYING STD. T700 AND T701

CITY OF TORRANCE

DATE ISSUED	VALVE BOX ASSEMBLY	STANDARD NO.
11 DEC 2006	ROBERT J. BESTE PUBLIC WORKS DIRECTOR R.C.E. NO. 50737	T712
		SHEET 1 OF 1

EM/T712-3

TT/T1001

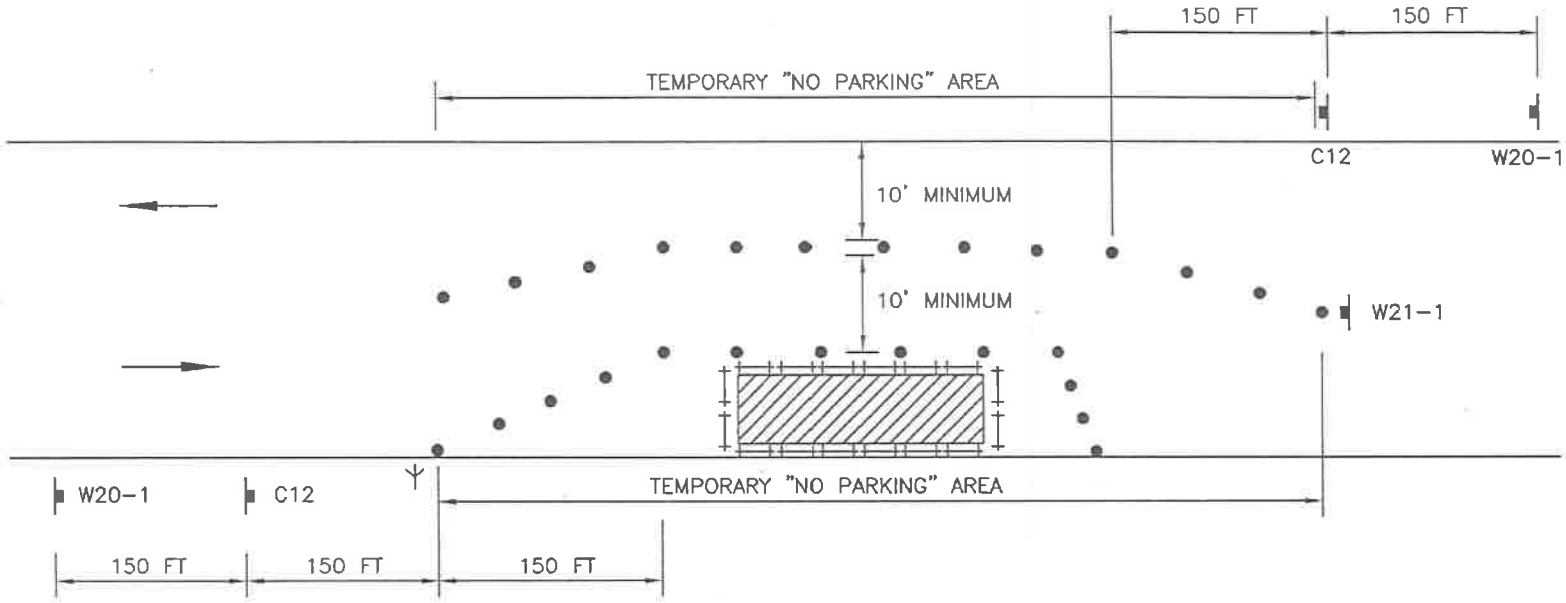

DESIGN TRAFFIC SPEED
25 MPH

DELINEATOR SPACING	
(TAPER)	(TANGENT)
25 FT.	25 FT.

CONSTRUCTION SIGNS:

C12(CA) : NARROW LANE

W20-1 : ROAD WORK AHEAD

W21-1 : WORKERS
OR W21-1a

OR

LEGEND:

HIGH LEVEL WARNING DEVICE WITH W21-1 OR W21-1a

28" TRAFFIC CONE OR 36" POST TUBE DELINEATOR

WORK AREA

SIGN

TRAFFIC DIRECTION

BARRICADE (FOR EXCAVATION ONLY)

CITY OF TORRANCE - WORK AREA TRAFFIC CONTROL

TYPICAL CURBSIDE STREET CLOSURE FOR LOCAL STREET

ROBERT J. BESTE
PUBLIC WORKS DIRECTOR
R.C.E. NO. 50737

DATE ISSUED
19 FEB 2008

STANDARD NO.
T1001

SHEET 1 OF 1

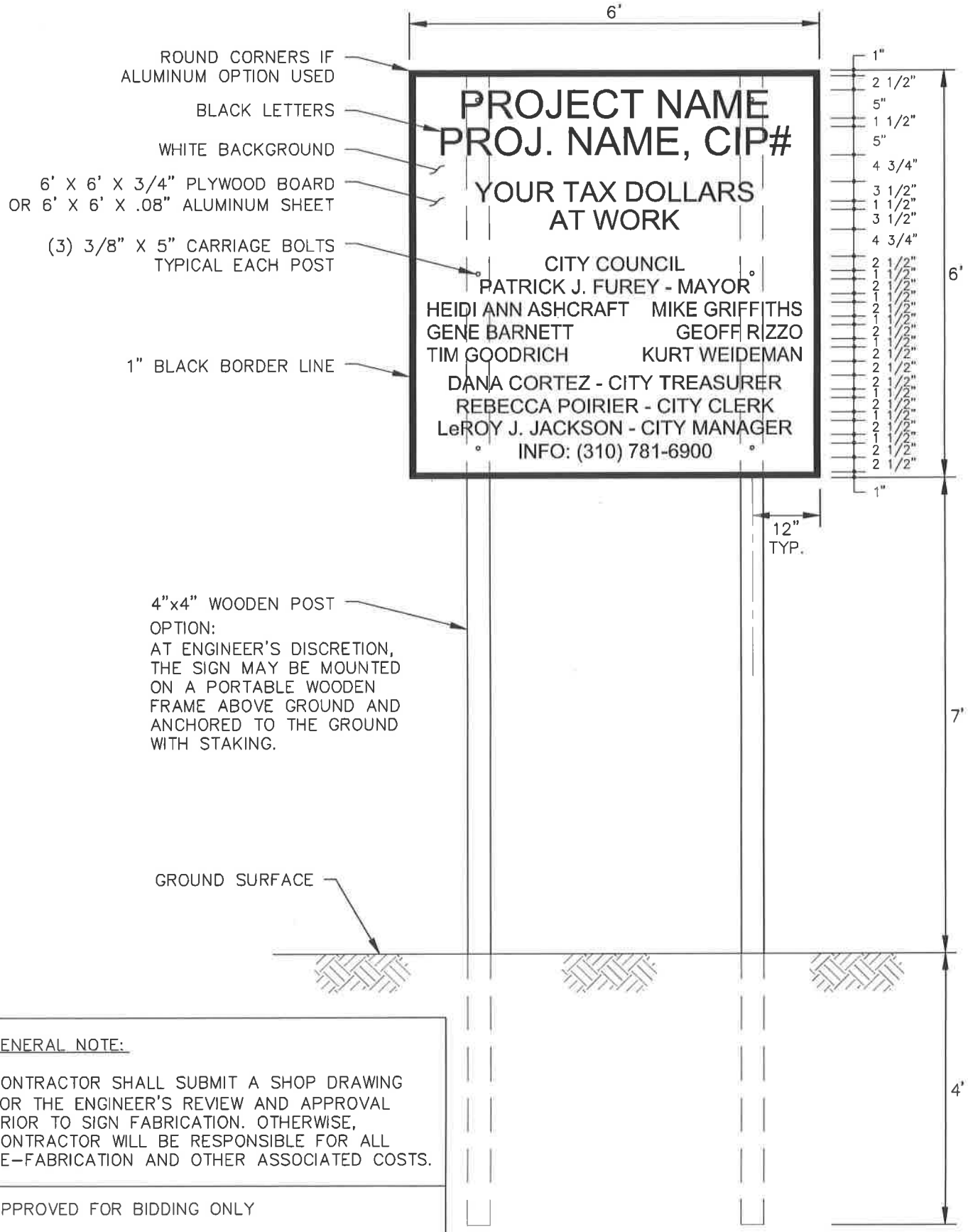

GENERAL NOTE:

CONTRACTOR SHALL SUBMIT A SHOP DRAWING FOR THE ENGINEER'S REVIEW AND APPROVAL PRIOR TO SIGN FABRICATION. OTHERWISE, CONTRACTOR WILL BE RESPONSIBLE FOR ALL RE-FABRICATION AND OTHER ASSOCIATED COSTS.

APPROVED FOR BIDDING ONLY

CITY ENGINEER DATE