## TECHNICAL INFORMATION, *CONTINUED*

### PARTS LIST

1. Body
2. Valve Flapper
3. Mounting Screw
4. Seat O-Ring
5. Body O-Ring
6. Support Ring
7. Spring (Optional)

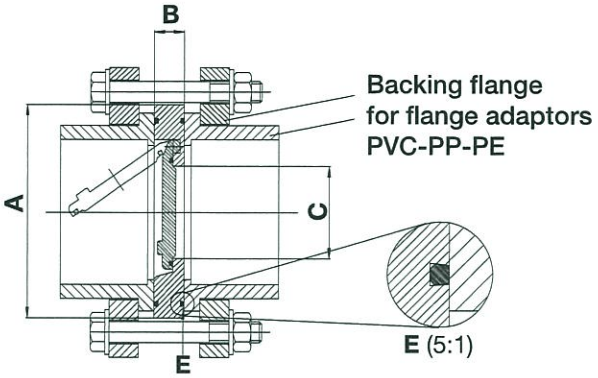


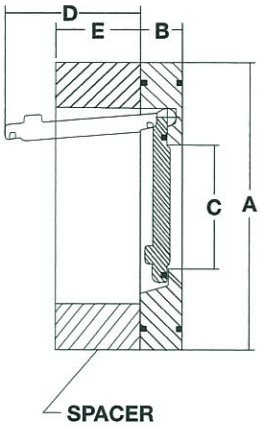


### DIMENSIONS – INCHES / MILLIMETERS

| SIZE in / DN | A in / mm | B in / mm | C in / mm | D (WITH SPRING) in / mm | E in / mm |
|---|---|---|---|---|---|
| 2 / 50 | 4.30 / 109 | .80 / 20 | 1.30 / 33 | 1.80 / 46 | 1.00 / 25 |
| 2-1/2 / 63 | 4.90 / 124 | .80 / 20 | 1.60 / 41 | 2.00 / 51 | 1.50 / 38 |
| 3 / 80 | 5.40 / 137 | .80 / 20 | 2.00 / 51 | 2.90 / 74 | 1.60 / 41 |
| 4 / 100 | 6.50 / 165 | .90 / 23 | 2.80 / 71 | 3.60 / 91 | 2.00 / 51 |
| 6 / 150 | 8.70 / 221 | 1.00 / 25 | 4.40 / 112 | 5.80 / 147 | 2.00 / 51 |
| 8 / 200 | 10.80 / 274 | 1.40 / 36 | 5.90 / 150 | 7.50 / 191 | 3.50 / 89 |
| 10 / 250 | 13.00 / 330 | 1.60 / 41 | 7.50 / 191 | 9.00 / 229 | 4.00 / 102 |
| 12 / 300 | 15.00 / 381 | 1.80 / 46 | 8.94 / 227 | 10.20 / 259 | 5.90 / 150 |

Dimensions are subject to change without notice – consult factory for installation information

### Cv VALUES

| SIZE in / DN | SCH 40 W/O SPACER | SCH 80 W/ SPACER |
|---|---|---|
| 2 / 50 | 58 | 74 |
| 2-1/2 / 63 | 77 | 108 |
| 3 / 80 | 105 | 203 |
| 4 / 100 | 224 | 300 |
| 6 / 150 | 718 | 949 |
| 8 / 200 | 980 | 1175 |
| 10 / 250 | 1880 | 2050 |
| 12 / 300 | 2520 | 2940 |

PRESSURE LOSS CALCULATION FORMULA

$$\Delta P = \left[\frac{Q}{Cv}\right]^2$$

$\Delta P$ = Pressure Drop

Q = Flow in GPM

Cv = Flow Coefficient

### OPERATING TEMPERATURE / PRESSURE

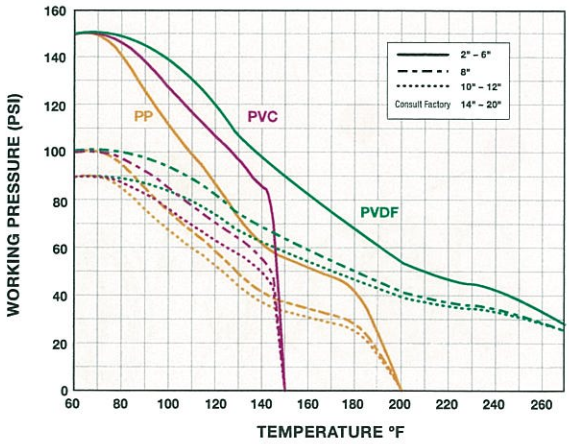



Hayward is a registered trademark of Hayward Industries, Inc.
© 2011 Hayward Industries, Inc.

– Hastelloy is a registered trademark of Haynes International Inc.