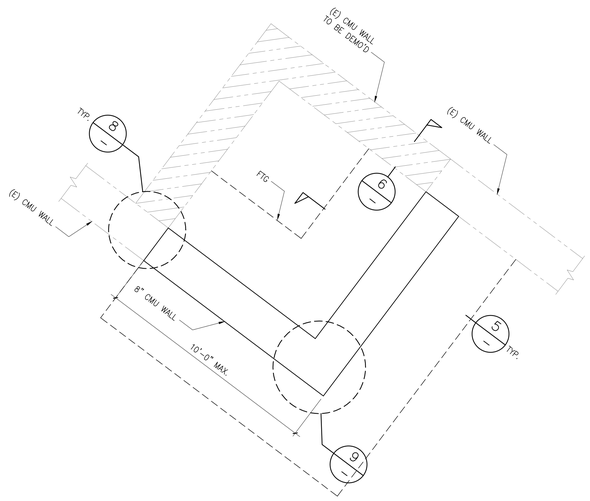

PLAN

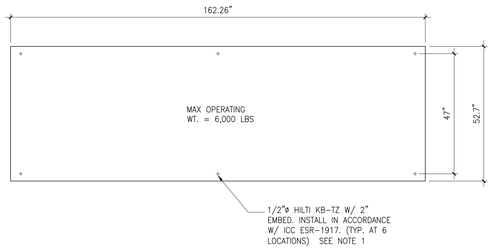

PLAN

NOTES:
1. ANCHOR BOLTS SHALL BE MIN. 6" FROM ANY CONC. EDGE
2. SEE 2/- FOR CONC. EQUIP. PAD DETAIL

10	NOT USED	SCALE:	N/A	4	PARTIAL PLAN AT EQUIPMENT YARD	SCALE:	N.T.S.	1	GENERATOR ANCHORAGE
11	NOT USED	SCALE:	N/A	8	(N) CMU WALL TO (E) WALL CONN.	SCALE:	1"=1'-0"	5	TYP. WALL SECTION
12	NOT USED	SCALE:	N/A	9	TYP. REINF. AT WALL CORNER	SCALE:	1"=1'-0"	6	SLAB AND FTG. CONN. TO EXISTING

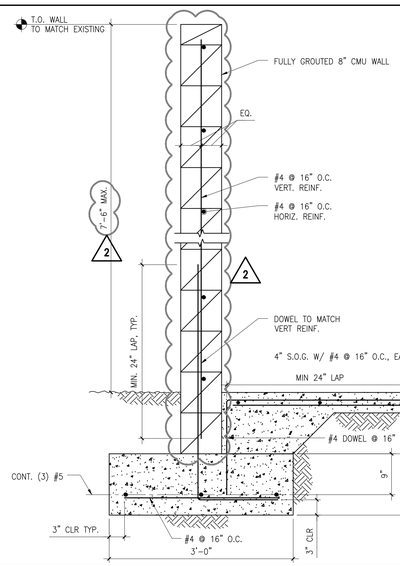

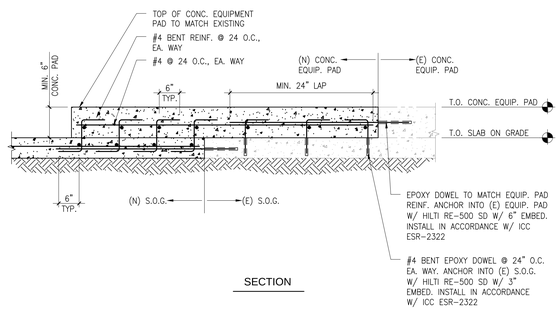

SECTION

NOTES:
1. SEE 1/- FOR INFO NOT SHOWN

2	CONC. EQUIPMENT PAD DETAIL	SCALE:	1"=1'-0"	3	ATS SWITCH ANCHORAGE	SCALE:	1"=1'-0"		

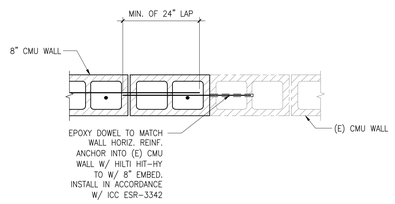

PLAN

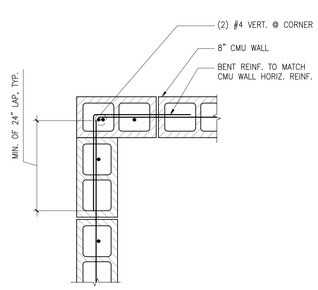

PLAN

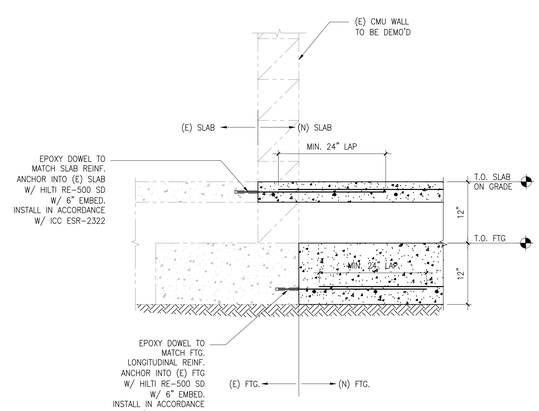

SECTION

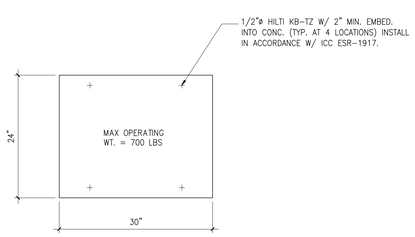

PLAN

REV.	DESCRIPTION	DATE	BY
1	ADDENDUM NO.1	12/10/2013	CK
	OMITTED SCOPE OF WORK REVISIONS TO CONTRACT	08/06/2013	
	CLIENT/PLAN CHECK ISSUANCE	07/30/2013	DL

REGISTERED PROFESSIONAL ENGINEER
DAVID C. LEE
NO. S5881
EXP. 6-30-13
STRUCTURAL
STATE OF CALIFORNIA

1983 WEST 190TH STREET, SUITE 200
TORRANCE, CA 90504
TEL: (310) 464-8404
FAX: (310) 464-8408
EMAIL: www.breeneng.com
BREEN Engineering Inc

STRUCTURAL SITE PLAN

GENERAL AVIATION CENTER
TORRANCE MUNICIPAL AIRPORT

3301 AIRPORT DRIVE
TORRANCE, CALIF. 90505

DATE:	07/30/13
SCALE:	AS NOTED
PROJECT NUMBER:	307-13-001
DRAWN BY:	PD
CHECKED BY:	DL
DRAWING NUMBER	S-2

COPYRIGHT ©2013 BREEN ENGINEERING, INC.