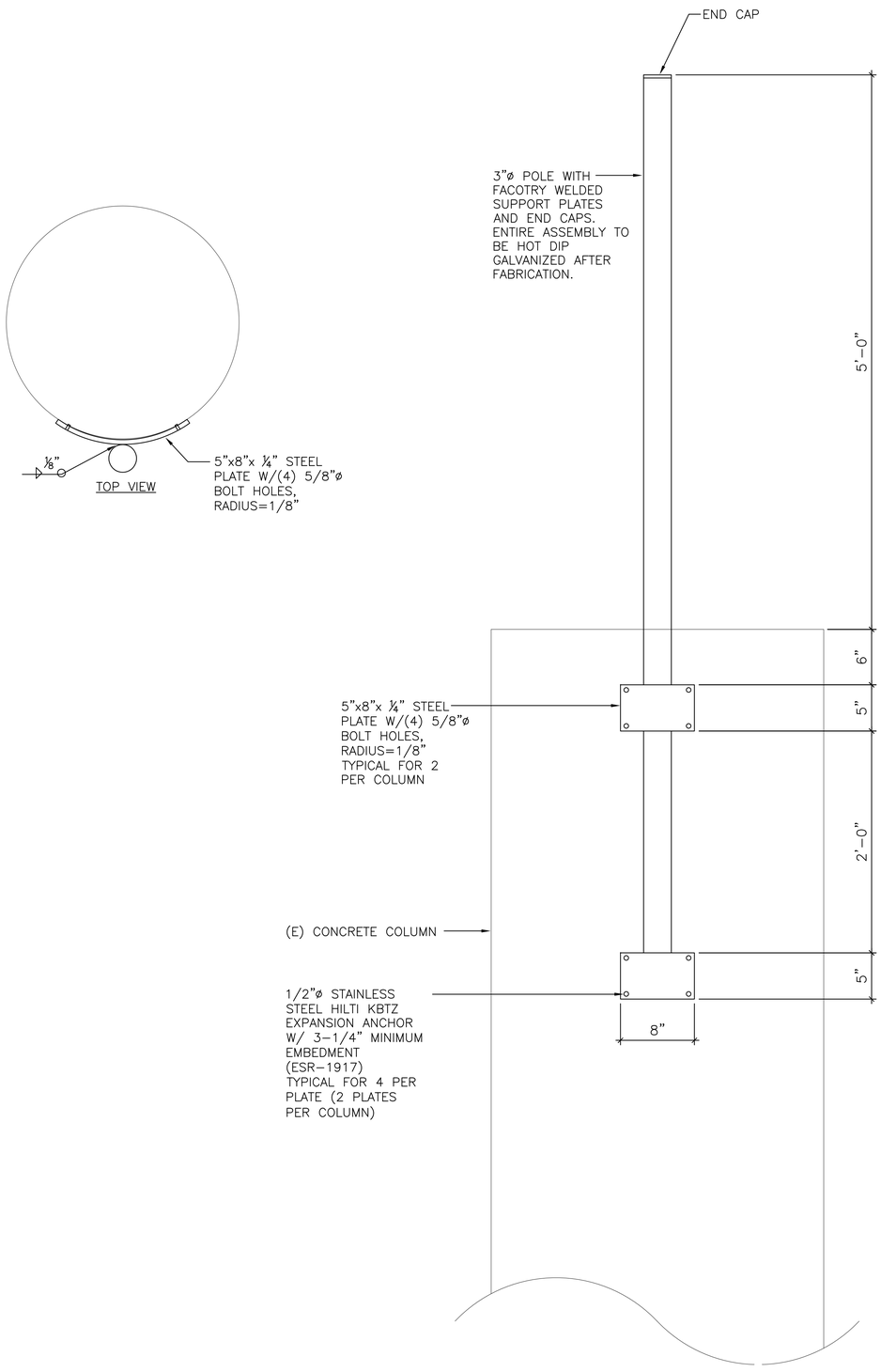

FIXTURE MOUNTING DETAIL 1 E3.0

SCALE : N.T.S.

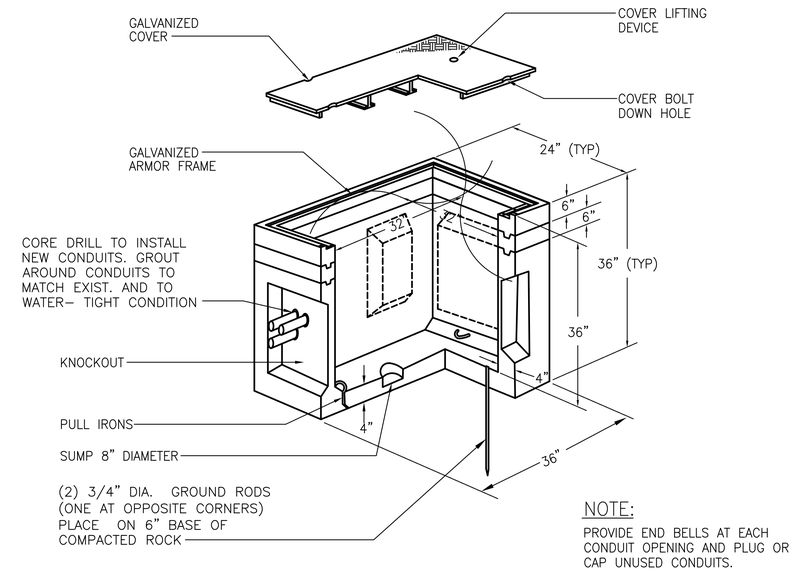

NOTE:

PROVIDE END BELLS AT EACH CONDUIT OPENING AND PLUG OR CAP UNUSED CONDUITS.

CONCRETE PULL BOX 2 E3.0

SCALE : N.T.S.

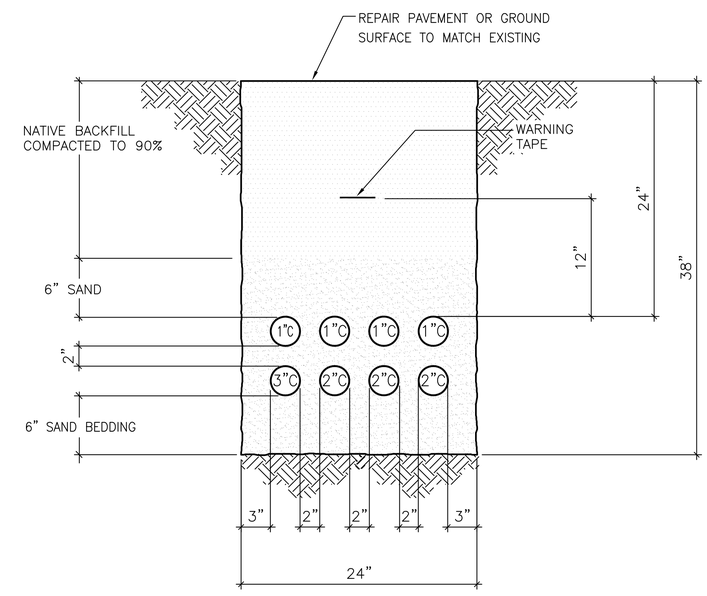

TRENCH DETAIL 3 E3.0

SCALE : N.T.S.

PROJECT TITLE

CHARLES H. WILSON PARK ELECTRICAL IMPROVEMENTS

2200 CRENSHAW BLVD.
TORRANCE, CA. 90501

PREPARED FOR

CITY OF TORRANCE GENERAL SERVICES DEPARTMENT

3350 CIVIC CENTER DRIVE
TORRANCE, CA 90503

CONSULTANT

J.C. CHANG & ASSOCIATES, INC.
ENGINEERS ARCHITECTS PLANNERS
385 VAN NESS AVENUE, SUITE 208
TORRANCE, CA. 90501 (310) 212 - 7644
FAX (310) 212 - 5272

STAMPS/SEALS

REGISTERED PROFESSIONAL ENGINEER HECTOR JANORAS LACSA No. E18399 Exp. 6/30/16 STATE OF CALIFORNIA

REVISIONS

1	BID REVISIONS	2015-12-04

SHEET TITLE:

DETAILS

PROJECT NO.:	15580-1	PROJECT ARCH:	
DRAWN:	SA	CHECKED:	SA

SHEET NUMBER

E3.0

DATE: 2015-12-04 SHEET: OF: 9

DATE/TIME: 17 Feb 2016, 10:39AM
FILE: Q:\15580-1\15580E30.dwg