CITY OF TORRANCE POLICE FACILITY

TORRANCE POLICE DEPARTMENT
New Forensic Science Laboratory

ABBREVIATIONS

AC	AIR CONDITIONER OR ASPHALTIC CONC.
ACC	AIR COOLED CONDENSER
ADJ	ADJACENT
ALUM	ALUMINUM
BM	BEAM
BOT.	BOTTOM
BLDG	BUILDING
CABT	CABINET
C.B.	CATCH BASIN
C.L.	CHAIN LINK
CLR	CLEAR
COMPO	COMPOSITION
CONC	CONCRETE
DN	DOWN
DET	DETAIL
DIA., Ø	DIAMETER
D.S.	DOWNSPOUT
DWG	DRAWING
EA	EACH
ELEC	ELECTRICAL
EQUIP	EQUIPMENT
EXIST (E)	EXISTING
FIN	FINISH
FF	FINISH FLOOR
FLR	FLOOR
FOF	FACE OF FINISH
GA	GAUGE
GALV	GALVANIZE
GYP BD	GYPSUM BOARD
HTR	HEATER
H.R.	HORSEPOWER
MB	MACHINE BOLT
MAX	MAXIMUM
MTL	METAL
MECH	MECHANICAL
M.D.O.	MEDIUM DENSITY OVERLAY
MET	METAL
MIN	MINIMUM
MTD	MOUNTED
(N)	NEW
O.C.	ON CENTER
OSA	OUTSIDE AIR
PL	PLATE
P. LAM.	PLASTIC LAMINATE
PLYWD	PLYWOOD
PTD	PAINTED
R.D.	ROOF DRAIN
RM	ROOM
SIM	SIMILAR
T.O.PL	TOP OF PLATE
TYP	TYPICAL
T&B	TOP AND BOTTOM
XFMR	TRANSFORMER
V.I.F.	VERIFY IN FIELD
U.N.O.	UNLESS NOTED OTHERWISE
WD	WOOD

SYMBOLS

DRAWING REFERENCE

2 / A1.01 — DRAWING IDENTIFICATION; SHEET NUMBER WHERE DRAWN

3 — KEYNOTES

ELEVATION REFERENCE

A, B, C, D — / A1.01 — DRAWING IDENTIFICATION; SHEET NUMBER WHERE DRAWN

GENERAL NOTES

1. NO CHANGES ARE TO BE MADE ON THESE PLANS WITHOUT THE KNOWLEDGE OR CONSENT OF THE OWNER AND ARCHITECT/ENGINEER WHOSE SIGNATURE APPEARS HEREON.
2. DIMENSIONS AS INDICATED ARE THE DIMENSIONS TO BE USED FOR CONSTRUCTION. DO NOT SCALE DRAWINGS. ALL DIMENSIONS ARE FACE OF FINISH, UNLESS OTHERWISE NOTED.
3. NO FRAMING OF ANY TYPE SHALL BE CONCEALED PRIOR TO INSPECTION BY GOVERNING AGENCIES.
4. REFERENCES TO ANY DETAIL OR DRAWINGS IS FOR CONVENIENCE ONLY AND DOES NOT LIMIT THE APPLICATION OF SUCH DETAIL OR DRAWINGS. DIMENSIONS AND CONDITIONS AT THE JOB SITE SHALL BE VERIFIED BY ALL CONTRACTORS.
5. IT IS THE RESPONSIBILITY OF THE CONTRACTORS TO EXAMINE THE PROJECT SITE AND IDENTIFY ANY EXISTING CONDITIONS PRIOR TO SUBMITTING BIDS TO THE OWNER SINCE PROPOSALS MUST TAKE INTO CONSIDERATION ALL SUCH DISCREPANCIES BETWEEN THE DRAWINGS AND ACTUAL FIELD CONDITIONS. ANY DISCREPANCIES SHALL BE REPORTED TO THE ARCHITECT AND TO THE OWNER. CORRECTED DRAWINGS OR INSTRUCTIONS SHALL BE ISSUED BY THE ARCHITECT PRIOR TO THE INSTALLATION OF ANY WORK.
6. ALL WORK, CONSTRUCTION AND MATERIALS SHALL COMPLY WITH ALL PROVISIONS OF THE BUILDING CODE AND WITH ALL OTHER RULES, REGULATION AND ORDINANCES GOVERNING THE PLACE OF CONSTRUCTION. IT IS THE RESPONSIBILITY OF ANYONE SUPPLYING LABOR OR MATERIAL OR BOTH TO BRING TO THE ATTENTION OF THE ARCHITECT AND THE OWNER ANY DISCREPANCIES OR CONFLICT BETWEEN THE REQUIREMENTS OF THE CODE AND THE DRAWINGS. THE APPLICABLE CODES SHALL INCLUDE, BUT SHALL NOT BE LIMITED TO:

   APPLICABLE CODES

   PART 1 2010 CALIFORNIA STANDARDS ADMINISTRATIVE CODE, TITLE 24
   PART 2 2010 CALIFORNIA BUILDING CODE (C.B.C.), TITLE 24
   PART 3 2010 CALIFORNIA ELECTRICAL CODE, TITLE 24
   PART 4 2010 CALIFORNIA MECHANICAL CODE (C.M.C.),
   PART 5 2010 CALIFORNIA ENERGY CODE
   PART 6 2010 CALIFORNIA FIRE CODE
   PART 7 2010 CALIFORNIA GREEN CODE
   NFPA 72 NATIONAL FIRE PROTECTION ASSOCIATION (NFPA) STANDARDS
7. THESE DRAWINGS DO NOT CONTAIN THE NECESSARY COMPONENTS FOR CONSTRUCTION SAFETY. WORKER AND PEDESTRIAN PROTECTION SHALL BE PROVIDED AND MAINTAINED BY THE GENERAL CONTRACTOR. ALL WORK TO COMPLY WITH OSHA REQUIREMENTS.
8. THE OWNER MAY ORDER EXTRA WORK OR MAKE CHANGES BY ALTERING, ADDING TO, OR DEDUCTING FROM THE WORK, THE CONTRACT SUM BEING ADJUSTED ACCORDINGLY.
9. ALL TRADES SHALL, AT ALL TIMES, KEEP THE PREMISES FREE FROM ACCUMULATION OF WASTE MATERIALS OR RUBBISH CAUSED BY THEIR WORK. AT THE COMPLETION OF THE WORK REMOVE ALL RUBBISH, TOOLS, SCAFFOLDING, SURPLUS MATERIALS AND LEAVE THE JOB IN A BROOM CLEAN CONDITION
10. THE CONTRACTOR SHALL PROVIDE ALL LABOR, MATERIALS, EQUIPMENT, TOOLS, TRANSPORTATION, UTILITIES, AND OTHER SERVICES NECESSARY FOR PROPER EXECUTION OF THE CONTRACT DOCUMENTS IN A TIMELY MANNER.
11. MATERIALS AND EQUIPMENT TO BE INSTALLED IN ACCORDANCE WITH RECOMMENDED MANUFACTURER'S PRINTED INSTRUCTIONS AND/OR COMPLY WITH LOCAL BUILDING CODES WHICHEVER IS MORE RESTRICTIVE.
12. THE CONTRACTOR SHALL PROVIDE ALL NECESSARY BLOCKING, BACKING, FRAMING, HANGERS OR OTHER SUPPORT FOR ALL FIXTURES, EQUIPMENT, CASEWORK, FURNISHINGS AND ALL OTHER ITEMS REQUIRING THE ABOVE.
13. THE GENERAL CONTRACTOR SHALL INCLUDE IN THE BID ALL TRENCHING, PATCHING AND REPAIRING REQUIRED FOR THE JOB, INCLUDING (BUT NOT LIMITED TO) STRUCTURAL ITEMS, ELECTRICAL, MECHANICAL AND PLUMBING LINES, FIXTURES AND SITE WORK.
14. THE FACILITY WILL REMAIN IN OPERATION AT ALL TIMES DURING THE PERIOD OF CONSTRUCTION. THE CONTRACTOR IS RESPONSIBLE FOR ASSURING THAT THE WORK WILL NOT UNDULY INTERFERE WITH FACILITY OPERATIONS AND SHOULD NOTIFY THE FACILITY MANAGER OF THE SCHEDULE OF WORK ON A REGULAR BASIS. AN "APPROVED" WORK SCHEDULE WILL BE REQUIRED PRIOR TO START OF WORK. CONTRACTOR TO SUBMIT SCHEDULE TO TORRANCE POLICE DEPARTMENT FOR APPROVAL PRIOR TO COMMENCING WORK.
15. ALL CONTRACTORS SHALL INCLUDE IN THEIR BIDS ALL OVERTIME NECESSARY TO COMPLETE THE JOB WITHIN THE OWNER'S ESTABLISHED SCHEDULE. IT IS THE RESPONSIBILITY OF EACH CONTRACTOR TO REVIEW THE DRAWINGS OF OTHER TRADES TO DETERMINE TO WHAT EXTENT OVERTIME WORK MAY BE NECESSARY.
16. SELECTIVE DEMOLITION SHALL DE DONE IN ACCORDANCE WITH THE CONSTRUCTION DOCUMENTS. REPAIR ANY DEMOLITION PERFORMED IN EXCESS OF THAT REQUIRED. REPAIR ADJACENT CONSTRUCTION OR SURFACES SOILED OR DAMAGED BY SELECTIVE DEMOLITION WORK.
17. WHERE PARTITIONS ARE REMOVED IN THE EXISTING BUILDING, PATCH & FINISH ADJACENT WALLS, FLOOR AND CEILINGS THAT ARE REMAINING TO MATCH NEW FINISHES.
18. WHERE NEW PARTITIONS ARE INSTALLED AND EXISTING CEILING IS TO REMAIN, PATCH & FINISH AFFECTED AREAS OF CEILINGS. NEW WORK SHALL MATCH EXISTING ADJACENT CEILING AREAS.
19. CUT ALL OPENINGS IN EXISTING CONSTRUCTION AS REQUIRED BY NEW STRUCTURAL, MECHANICAL AND ELECTRICAL WORK. PATCH & FINISH TO MATCH EXISTING ADJACENT FINISHES.
20. WHERE EXISTING FIXTURES, WALLS, AND PARTITIONS HAVE BEEN REMOVED, AFFECTED AREAS AT NEW WORK SHALL BE PATCHED TO MATCH EXISTING ADJACENT FINISHES.
21. AREAS SUCH AS WALLS, CEILINGS, DOORS AND FRAMES THAT ARE PART OF, OR AFFECTED BY, NEW WORK SHALL BE THOROUGHLY CLEANED AND PREPARED TO RECEIVE NEW PAINT.
22. EXISTING REST ROOMS ARE TO BE FULLY ACCESSIBLE TO THE DISABLED. (TITLE 24)
23. EXIT DOORS SHALL BE OPENABLE FROM THE INSIDE WITHOUT THE USE OF A KEY OR ANY SPECIAL KNOWLEDGE OR EFFORT.
24. PROVIDE APPROVED SIGNAGE AND FIRE EXTINGUISHERS OF A TYPE, SIZE AND LOCATION AS DIRECTED BY THE FIRE INSPECTOR, SELECTION TO BE REVIEWED BY THE ARCHITECT.
25. EXIT SIGNAGE AND EXIT PATHWAY ILLUMINATION SHALL BE PROVIDED IN COMPLIANCE WITH CBC SECTION 1003.2.8.4 AND 1003.2.9.1. SEE ELECTRICAL DRAWINGS FOR TYPE AND LOCATION. SUBJECT TO APPROVAL OF THE FIRE INSPECTOR.
26. THIS BUILDING HAS AN AUTOMATIC FIRE SPRINKLER AND AUTOMATIC DETECTOR SYSTEM. **DESIGN MODIFICATION AND INSTALLATION MUST BE APPROVED BY THE CITY OF TORRANCE FIRE PREVENTION DIVISION.** CONTRACTOR TO VERIFY ALL REQUIREMENTS FOR FIRE SPRINKLER AND ALARM PLAN CHECK REVIEW. A SEPARATE PERMIT AND SEPARATE PLAN CHECK SUBMITTAL IS REQUIRED.
27. ALL WORK NEW (N) UNLESS NOTED AS EXISTING (E).
28. MECHANICAL, ELECTRICAL AND PLUMBING DRAWINGS ARE UNDER A SEPARATE PERMIT AND SEPARATE PLAN CHECK SUBMITTAL (IF PLANS ARE REQUIRED)

ADA NOTES:

1. PATH OF TRAVEL TO THE TENANT IMPROVEMENT AREA SHALL BE FULLY ACCESSIBLE TO THE DISABLED.
2. EXISTING RESTROOMS SERVING THE AREA OF WORK ARE FULLY ACCESSIBLE TO THE DISABLED.
3. THERE ARE EXISTING DISABLED PARKING SPACE SERVING THE TENANT IMPROVEMENT AREA.
4. EXISTING DRINKING FOUNTAIN AND PUBLIC TELEPHONE WHERE PROVIDED AND SERVING THE AREA OF WORK TO BE ACCESSIBLE TO THE DISABLED.

VICINITY MAP

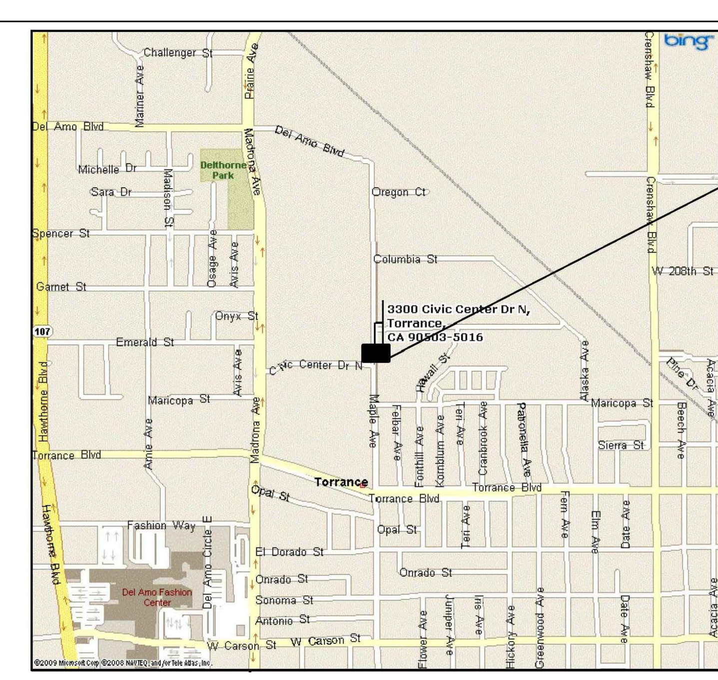

PROJECT INFORMATION

PROJECT ADDRESS:

3300 CIVIC CENTER DRIVE,
TORRANCE, CA. 90503

PROJECT DATA:

JOB AREA: BASEMENT FLOOR – 1,365 SQ. FT. (APPROX.)
FULLY SPRINKLERED
OCCUPANCY GROUP – B/I-3
TYPE OF CONSTRUCTION – I
NUMBER OF STORIES – 2 PLUS BASEMENT

PROJECT TEAM

ARCHITECTURE
TETRA-IBI GROUP
1055 WILSHIRE BLVD., SUITE 1885
LOS ANGELES, CA 90017
TEL. (213) 250-7440
FAX (213) 481-0947

ELECTRICAL ENGINEER
PACIFIC ENGINEERS GROUP
11028 VICTORY BLVD., SUITE 201
NORTH HOLLYWOOD, CA 91606
TEL. (818) 763-9189
FAX (818) 763-9180

MECHANICAL & PLUMBING ENGINEER
MAROKO & SHWE, INC.
1106-B W. MAGNOLIA BLVD.,
BURBANK, CA 91506
TEL. (818) 840-0280
FAX (818) 840-0284

PATH OF TRAVEL

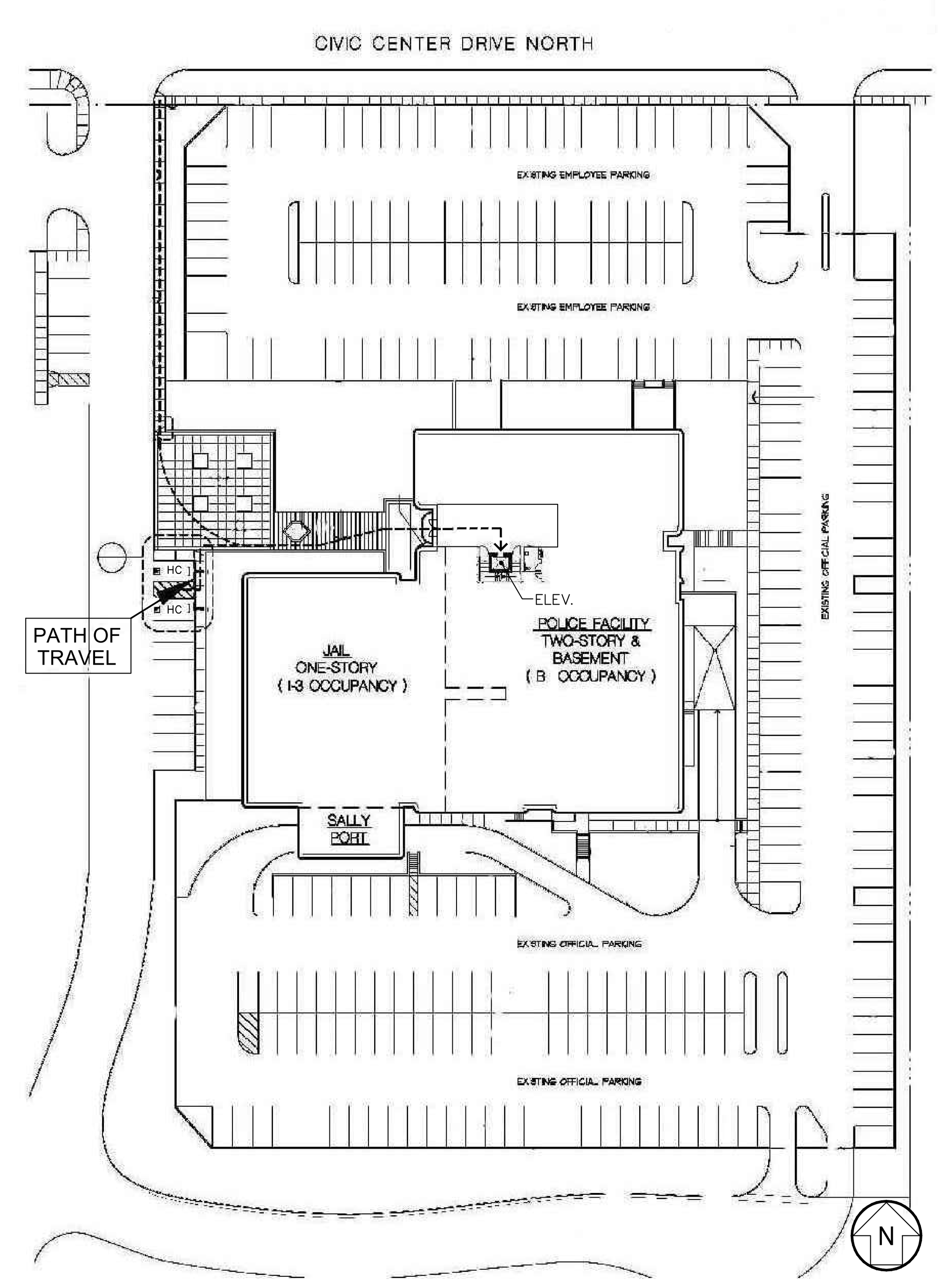

SHEET INDEX

SHEET	DESCRIPTION
ARCHITECTURAL	
G1-0.0	COVER SHEET
A1-0.1	MASTER/KEY PLAN
A1-1.1	EXISTING & DEMO FLOOR PLAN
A1-1.2	EXISTING & DEMO CEILING PLAN
A2-0.1	PARTITION PLAN
A2-1.1	REFLECTED CEILING PLAN
A2-2.1	FURNITURE & EQUIPMENT PLAN
A2-3.1	FINISH PLAN
A3-0.1	ENLARGED ELEVATIONS
A7-0.1	DOOR & HARDWARE SCHEDULE
A9-0.1	DETAILS
A9-1.1	ACOUSTIC CEILING DETAILS
A9-2.1	STUD FRAMING DETAILS
A9-2.2	STUD FRAMING DETAILS
ELECTRICAL	
E0-0.1	SYMBOL LIST
E0-0.2	GENERAL NOTES & FIXTURE SCHEDULE
E0-0.3	TITLE 24 FORMS
E0-0.4	SINGLE LINE DIAGRAM
E0-0.5	PANEL SCHEDULES
E1-1.1	BASEMENT LEVEL-DEMOLITION & LIGHTING PLANS
E2-1.1	BASEMENT LEVEL-POWER & SIGNAL PLANS, ROOF PLAN
MECHANICAL	
M1-1.0	LEGEND, NOTES & SHEET INDEX
M1-1.1	EXISTING & DEMO FLOOR PLAN
M1-1.2	PARTIAL ROOF PLAN
M1-2.0	SCHEDULE
M1-3.0	DETAILS & CONTROLS
PLUMBING	
P1-1.0	LEGEND, NOTES & SHEET INDEX
P1-1.1	SCHEDULED & DETAILS
P1-2.0	BASEMENT LEVEL-DEMOLITION & MODERNIZATION FLOOR PLANS

SCOPE OF WORK

1. IMPROVEMENT AND REMODELING OF THE FORENSIC SCIENCE LABORATORY AT THE BASEMENT LEVEL

NOTE:
CONTRACTOR TO COORDINATE WITH ELECTRICAL, MECHANICAL AND PLUMBING DRAWINGS. VERIFY ALL EXISTING CONDITIONS. REFER TO GENERAL NOTES FOR ADDITIONAL REQUIREMENTS FOR ALL DISCIPLINES.

CITY of TORRANCE
POLICE FACILITY
Torrance, California

Consultants

TETRA -IBI Group
ARCHITECTS & PLANNERS
1055 Wilshire Boulevard, Suite 1885
Los Angeles, CA 90017-5602
PHONE 213 250-7440 FAX 213 481-0947

LICENSED ARCHITECT
JERROLD RUSSELL PENROSE
NO. C 7568
REN. 10-31-13
STATE OF CALIFORNIA

Drawn by	MM
Checked by	KS
Date	09/19/11

No. Revision	Date
A. ISSUE FOR REVIEW	11-21
B. ISSUE FOR PLAN CHECK	12-22
C. PLAN CHECK RESUBMIT	05-15

Project

TORRANCE POLICE DEPT.
New Forensic Science Laboratory

3300 Civic Center Dr.,
Torrance, CA. 90503

Drawing Title

COVER SHEET

Project Number	30257
Scale	N.T.S.
Set	
Drawing Number	G1-0.0

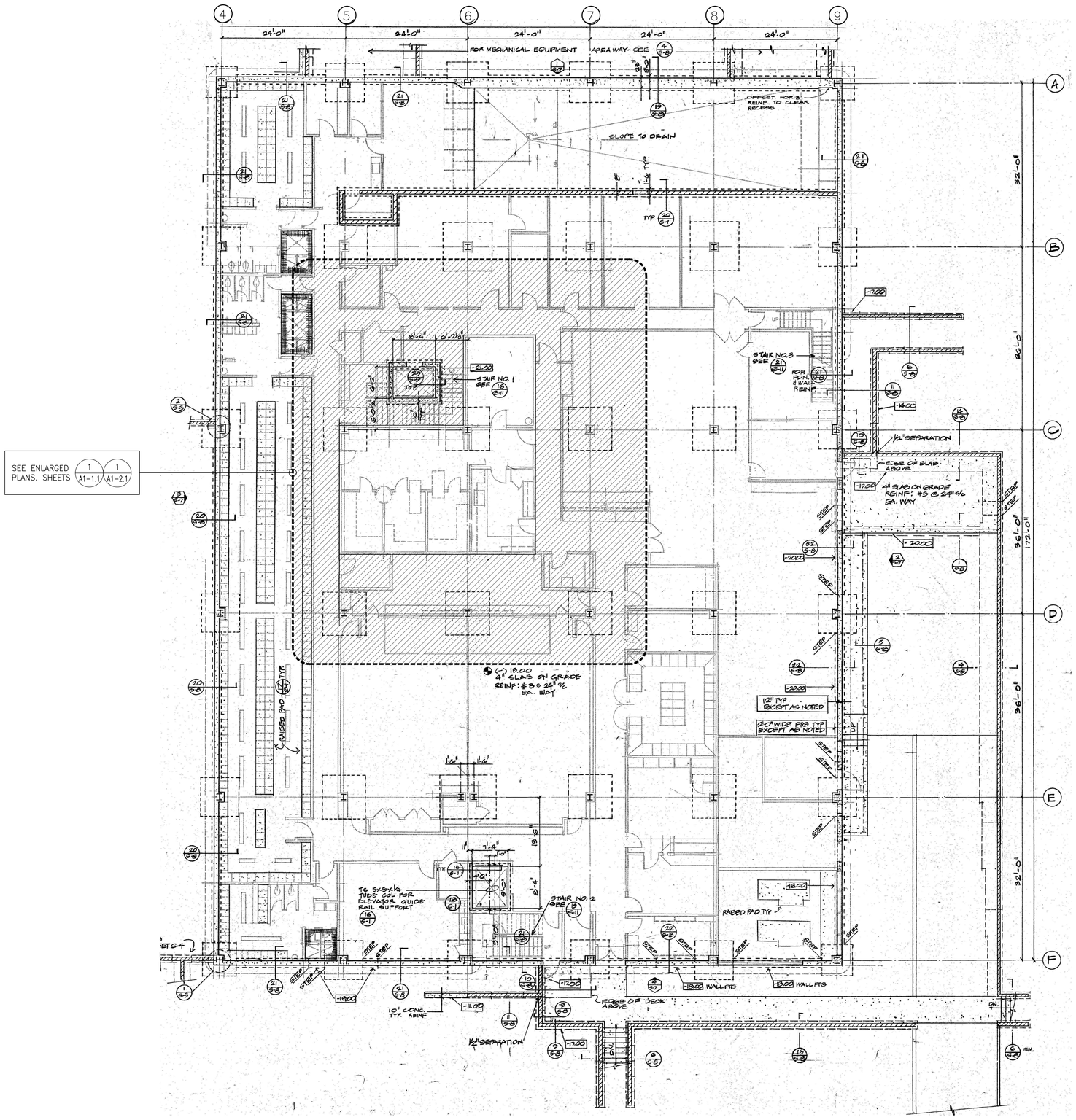

NORTH

LEGEND:

(E) WALL TO REMAIN

(E) DOOR TO REMAIN, U.N.O.

N.I.C. (NOT IN CONTRACT) AREAS

THIS PLAN IS FOR REFERENCE ONLY. ALL DETAIL CALL-OUTS AND DETAIL REFERENCES SHOWN IN THIS PLAN ARE NOT APPLICABLE FOR THIS PROJECT.

CITY of TORRANCE
POLICE FACILITY
Torrance, California

Consultants

TETRA -IBI Group
ARCHITECTS & PLANNERS
2055 Wilshire Boulevard, Suite 2885
Los Angeles, CA 90027-5602
PHONE 213 250-7440 FAX 213 481-0947

LICENSED ARCHITECT
NO. C 7568
REN.10-31-13
STATE OF CALIFORNIA

Drawn by: MM

Checked by: KS

Date: 09/19/11

No.	Revision	Date
A.	ISSUE FOR REVIEW	11-21
B.	ISSUE FOR PLAN CHECK	12-22
C.	PLAN CHECK RESUBMIT	05-15

Project

TORRANCE POLICE DEPT.
New Forensic Science Laboratory

3300 Civic Center Dr.,
Torrance, CA. 90503

Drawing Title

MASTER / KEY PLAN

Project Number: 30257

Scale: AS NOTED

Set

Drawing Number

A1-0.1

SCALE 3/32"=1'-0"

BASEMENT LEVEL - MASTER / KEY PLAN

1

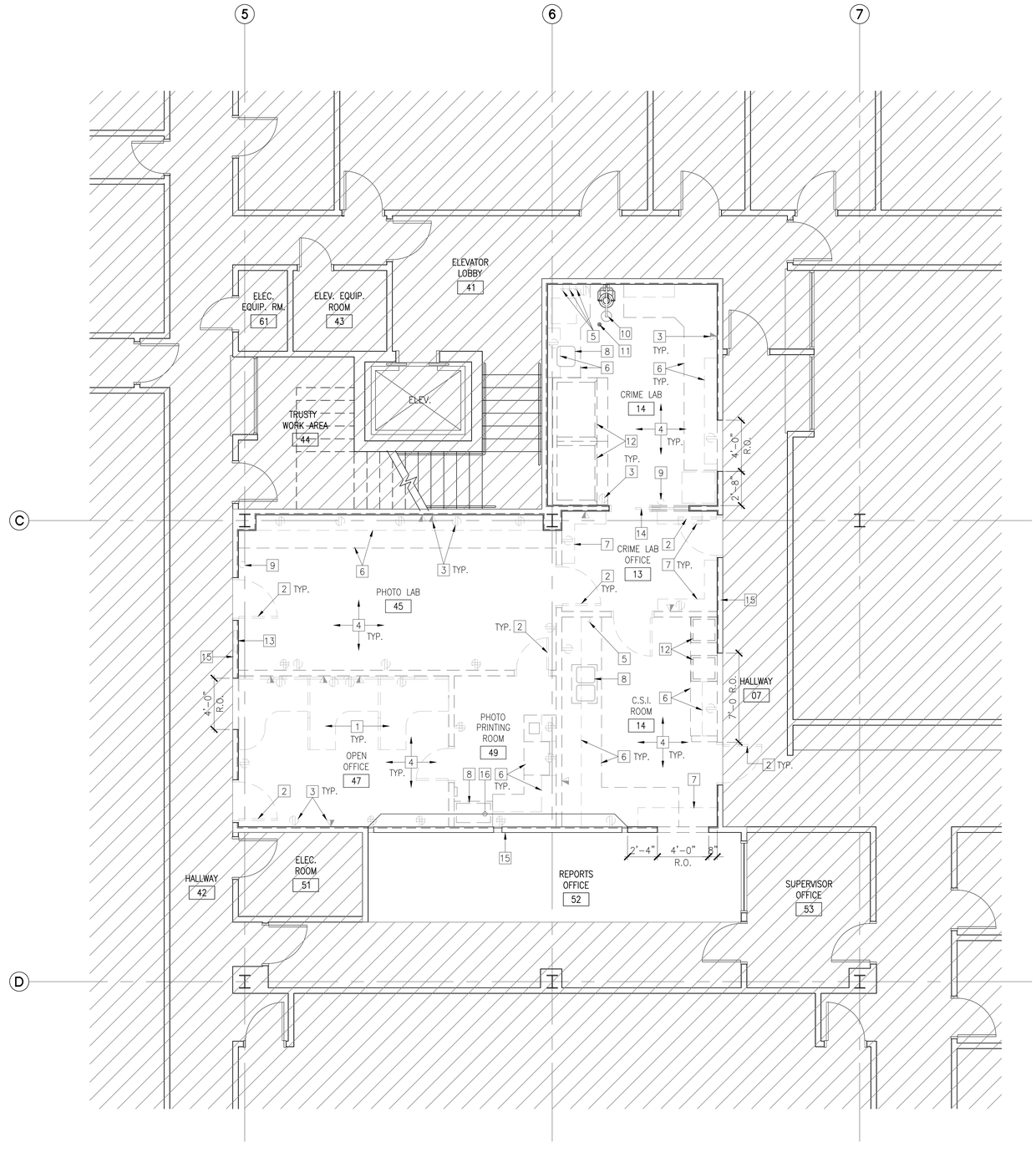

NORTH

LEGEND:

(E) PARTITION WALL TO REMAIN, U.N.O. REMOVE AND REPLACE DRYWALL FINISH AT INTERIOR SIDE ONLY, TYP.

EXISTING TO BE REMOVED OR DEMOLISHED, TYP., U.N.O.

(E) DOOR AND FRAME TO REMAIN, U.N.O.

N.I.C. (NOT IN CONTRACT) AREAS

KEYNOTES:

1. REMOVE AND SALVAGE (E) WORKSTATIONS AND FURNITURES.
2. REMOVE (E) SWING DOOR AND FRAME SALVAGE AS REQUIRED FOR RE-USE.
3. DISCONNECT AND REMOVE (E) ELECTRICAL POWER AND TELE-COMM. DATA OUTLETS WHERE WALLS ARE TO REMAIN, TYP.
4. REMOVE (E) VINYL FLOOR AND RUBBER BASE THROUGHOUT THE AREA OF WORK
5. DISCONNECT AND REMOVE (E) GAS LINES, CAP WITHIN WALL CAVITY.
6. REMOVE (E) COUNTERTOP WITH LOWER AND UPPER CABINETS
7. REMOVE (E) UPPER CABINETS/SHELVES
8. REMOVE (E) SINK. REMOVE AND CAP WATER AND WASTE PLUMBING LINES.
9. REMOVE (E) WALL MOUNTED FIRE EXTINGUISHER
10. REMOVE (E) EYEWASH/SHOWER. REMOVE AND CAP SUPPLY, WASTE AND VENT LINES BELOW SLAB OR WITHIN WALL CAVITY.
11. REMOVE (E) FLOOR DRAIN, COVER AND LEVEL FLOOR TO MATCH EXISTING CONC. FLOOR
12. REMOVE (E) EQUIPMENTS/FUME HOODS, SALVAGE AS REQUIRED.
13. REMOVE (E) RECESSED METAL WALL PANEL
14. REMOVE (E) POCKET DOOR AND FRAME.
15. REMOVE (E) WALL BASE AS REQUIRED, SEE FINISH PLAN FOR EXTENT OF BASE DEMO.
16. (E) WALL TO REMAIN. MODIFY AS REQUIRED TO INSTALL NEW GLASS WINDOWS PER PLAN. SEE ELEVATION 1C/A3-0.1

NOTES:

1. VERIFY SALVAGE REQUIREMENTS FOR ALL DEMO ITEMS WITH THE TORRANCE POLICE FACILITY AND CITY OF TORRANCE PRIOR TO DUMPING.
2. REMOVE ALL DEMOLISHED MATERIALS AND CLEAN THE AREA OF WORK PRIOR TO START OF CONSTRUCTION.
3. VERIFY WITH THE TORRANCE POLICE FACILITY ALL ITEMS TO BE SALVAGED FOR STORAGE.
4. SEE ELECTRICAL AND MECHANICAL DRAWINGS FOR ADDITIONAL DEMO NOTES AND INFORMATION.
5. ALL EXISTING ITEMS NOT PART OF SCOPE OF WORK SHALL REMAIN AND BE PROTECTED DURING CONSTRUCTION.

CITY of TORRANCE
POLICE FACILITY
Torrance, California

Consultants

TETRA -IBI Group
ARCHITECTS & PLANNERS
2055 Wilshire Boulevard, Suite 1885
Los Angeles, CA 90017-5602
PHONE 213 250-7440 FAX 213 481-0947

LICENSED ARCHITECT
SHAHAD RASSELL PEARCE
NO. C 7568
REN.10-31-13
STATE OF CALIFORNIA

Drawn by: MM
Checked by: KS
Date: 09/19/11

No.	Revision	Date
A.	ISSUE FOR REVIEW	11-21
B.	ISSUE FOR PLAN CHECK	12-22
C.	PLAN CHECK RESUBMIT	05-15

Project

TORRANCE POLICE DEPT.
New Forensic Science Laboratory

3300 Civic Center Dr.,
Torrance, CA. 90503

Drawing Title

EXISTING & DEM
FLOOR PLAN

Project Number: 30257
Scale: AS NOTED
Set
Drawing Number: A1-1.1

SCALE
1/4"=1'-0"

BASEMENT LEVEL - EXISTING & DEMO FLOOR PLAN

1

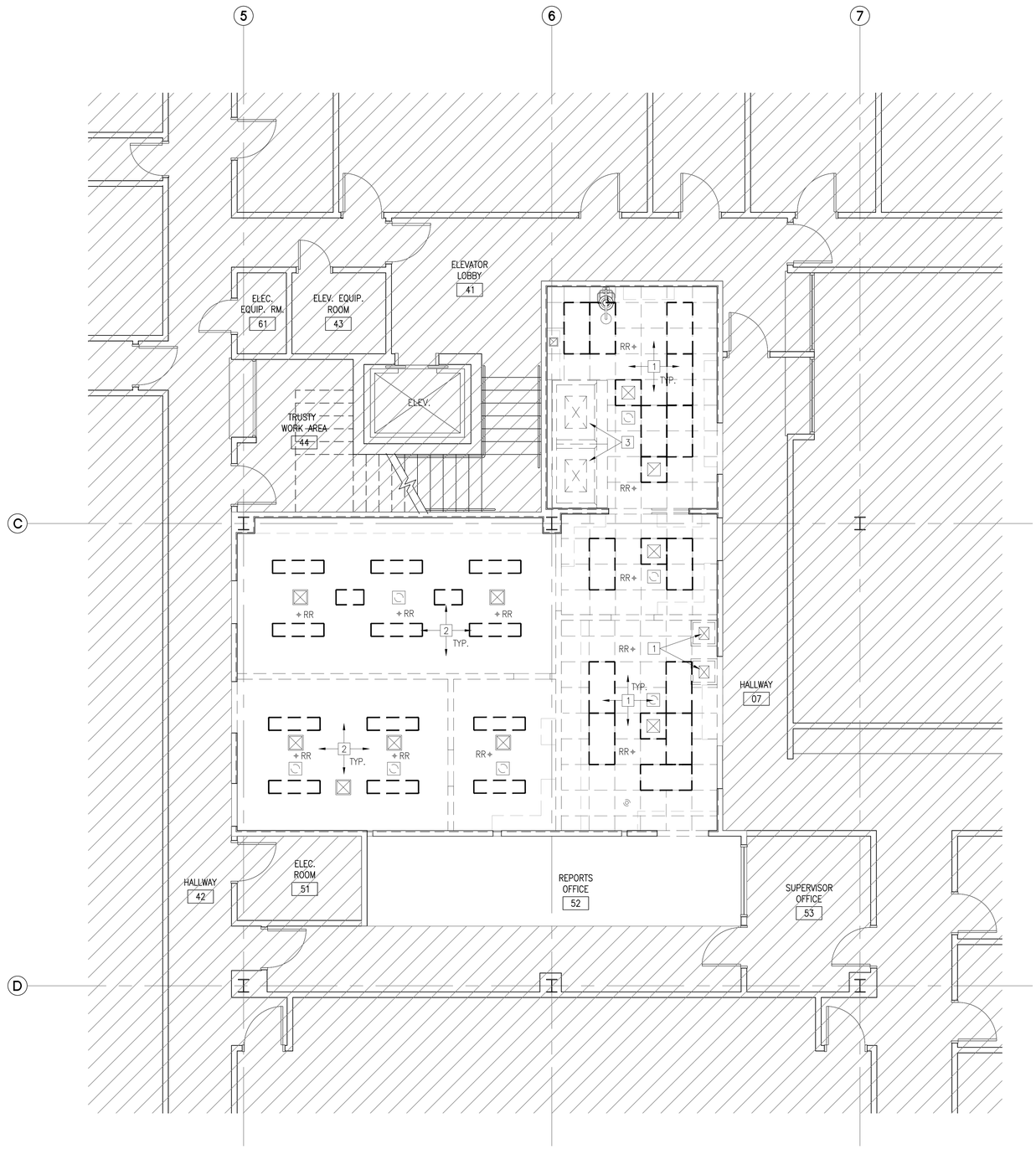

NORTH

LEGEND :

- REMOVE (E) 24"X24" SUSPENDED ACOUSTIC CEILING TILES AND METAL GRID SYSTEM
- REMOVE (E) 24"X48" RECESSED MOUNTED LIGHT FIXTURES
- REMOVE (E) 12"X48" RECESSED MOUNTED LIGHT FIXTURES
- REMOVE (E) 12"X24" RECESSED MOUNTED LIGHT FIXTURES
- REMOVE (E) 24"X24" SUPPLY AIR REGISTERS
- REMOVE (E) 24"X24" RETURN AIR GRILLES
- REMOVE (E) 12"X12" SUPPLY AIR REGISTERS
- REMOVE (E) 12"X12" RETURN AIR GRILLES
- REMOVE (E) 12"X12" CEILING MOUNTED SPEAKERS
- REMOVE (E) FIRE SPRINKLER HEADS
- N.I.C. (NOT IN CONTRACT) AREAS
- HIDDEN LINES DENOTES EXISTING CEILING ITEMS TO BE REMOVED
- RR — DENOTES "REMOVE AND RELOCATE"

KEYNOTES:

1. REMOVE (E) SUSPENDED ACOUSTIC CEILING SYSTEM, LIGHT FIXTURES, SPEAKERS AND HVAC GRILLES, U.N.O.
2. REMOVE (E) HARDLID CEILING, LIGHT FIXTURES, SPEAKERS AND HVAC GRILLES, U.N.O.
3. REMOVE AND RELOCATE (E) EXHAUST DUCTS AS REQUIRED PER NEW FUME HOODS LOCATION

NOTES:

1. VERIFY SALVAGE REQUIREMENTS FOR ALL DEMO ITEMS WITH TORRANCE POLICE FACILITY AND CITY OF TORANCE PRIOR TO DUMPING.
2. REMOVE ALL DEMOLISHED MATERIALS AND CLEAN THE AREA OF WORK PRIOR TO START OF CONSTRUCTION.
3. VERIFY WITH TORRANCE POLICE FACILITY ALL CEILING ITEMS TO BE SALVAGED FOR STORAGE.
4. SEE ELECTRICAL DRAWINGS FOR ADDITIONAL DEMO NOTES AND INFORMATION.

CITY of TORRANCE
POLICE FACILITY
Torrance, California

Consultants

TETRA -IBI Group
ARCHITECTS & PLANNERS
2035 Wilshire Boulevard, Suite 1185
Los Angeles, CA 90057-3600
PHONE 213.250-7440 FAX 213 481-9947

LICENSED ARCHITECT
GEORGE RUSSELL SCHEER
NO. C 7568
RENEW 8-31-13
STATE OF CALIFORNIA

Drawn by: MM
Checked by: KS
Date: 09/19/11

No.	Revision	Date
A.	ISSUE FOR REVIEW	11-21
B.	ISSUE FOR PLAN CHECK	12-22
C.	PLAN CHECK RESUBMIT	05-15

Project

TORRANCE POLICE DEPT.
New Forensic Science Laboratory

3300 Civic Center Dr.,
Torrance, CA. 90503

Drawing Title

EXISTING & DEM CEILING PLAN

Project Number: 30257
Scale: AS NOTED
Set:
Drawing Number: A1-1.2

SCALE
1/4"=1'-0"

BASEMENT LEVEL - EXISTING & DEMO CEILING PLAN

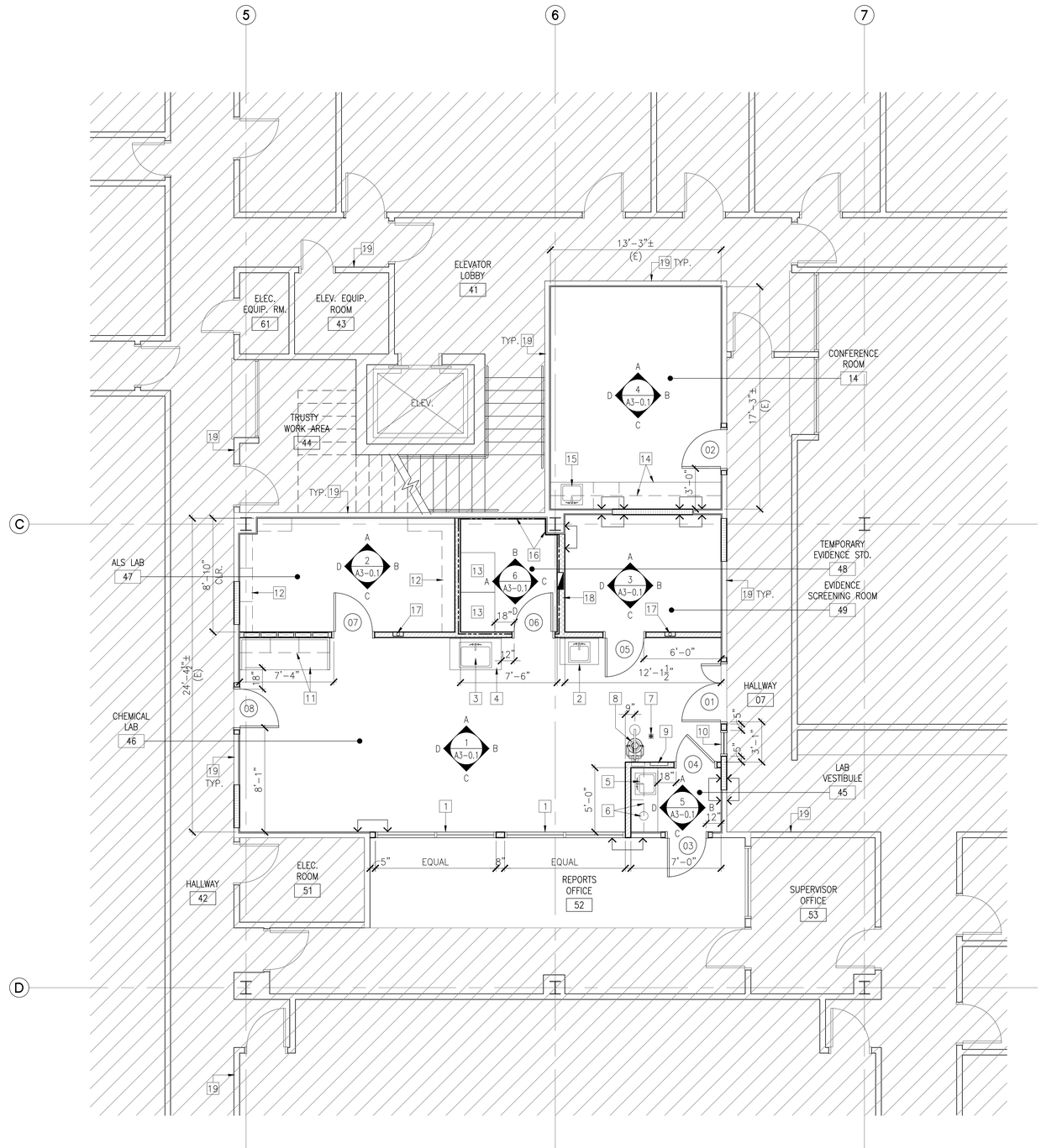

LEGEND:

- (E) PARTITION WALL TO REMAIN. PROVIDE 1–LAYER ⅝" THK. TYPE "X" GYP. BD. @ RATED PERIMETER WALLS (@ INTERIOR SIDE ONLY) FROM FLOOR TO UNDERSIDE OF DECK. SEE DETAILS 9 & 10/A9–0.1 (USE: ⅝" THK. GYP. BD. BOTH SIDES @ INTERIOR WALLS)
- (N) PARTITION WALL, 1–LAYER ⅝" THK. GYP. BD., BOTH SIDES OVER 4"X20 GA. METAL STUDS @ 16" O.C., TYP., 6" ABOVE CEILING, TYP. SEE DETAILS 2 & 3/A9–0.1
- (N) PARTITION WALL WITH SECURITY MESH, 1–LAYER ⅝" THK. GYP. BD., BOTH SIDES OVER 4"X20 GA. METAL STUDS @ 16" O.C., TYP. PROVIDE STEEL MESH SHEET, ASM .75–9F, FROM FLOOR TO UNDERSIDE OF DECK. SEE DETAILS 1 & 2A/A9–0.1
- (N) WALL INFILL, 1–LAYER ⅝" THK. TYPE "X" GYP. BD., BOTH SIDES (@ RATED PERIMETER WALLS) OVER METAL STUDS @ 16" O.C., TYP., TO MATCH ADJACENT WALL THICKNESS. (USE: ⅝" THK. GYP. BD. BOTH SIDES FOR INTERIOR WALLS) SEE DETAILS 2 & 6/A9–0.1
- (E) DOOR AND FRAME TO REMAIN, U.N.O.
- DOOR NUMBER
- NEW DOOR AND FRAME, SEE DOOR & HARDWARE SCHEDULE, SHEET A7–0.1
- N.I.C. (NOT IN CONTRACT) AREAS
- ALIGN

KEYNOTES:

1. ¼" THK. FIXED GLASS WINDOWS WITH ALUM. FRAME, SEE INTERIOR ELEVATION
2. SUSPENDED 25"D X 36"L WALL MOUNTED EPOXY RESIN (ADA) COUNTERTOP AND 14"W X10"L X6"D SINK, UNDERCOUNTER MOUNT WITH FAUCET AND LEVER CONTROL HANDLES. SEE DET. 13/A9–0.1
3. 18"W X15"L X11"D DEEP EPOXY RESIN SINK, UNDERCOUNTER MOUNT WITH FAUCET AND FOOT PEDALS CONTROL.
4. 30"D X 48"L EPOXY RESIN COUNTERTOP OVER BASE CABINETS
5. STAINLESS STEEL HAND WASH LAVATORY WITH FAUCET AND LEVER CONTROL HANDLES.
6. COUNTERTOP OVER BASE CABINETS AND UPPER CABINETS. PROVIDE 8" DIA. HOLE AT COUNTERTOP TO BIO WASTE BIN BELOW
7. FLOOR DRAIN, ¼" SLOPE TO DRAIN. (LOCATE CENTER OF SHOWER HEAD
8. FLOOR MOUNTED EYEWASH AND EMERGENCY SHOWER WITH WATER TEMPERING SYSTEM
9. RECESSED FIRST AID CABINET
10. DOOR SIDELITE, 22"W X 50"H X ¼" THK. WIRED GLASS WITH METAL FRAME, 20 MIN.,
11. CUSTOM BUILT STAINLESS STEEL WORK SURFACE WITH POWDER (DUSTING) PIT AND UPPER CABINETS. PROVIDE UNDER CABINET TASK LIGHTS.
12. UPPER CABINETS. PROVIDE UNDER CABINET TASK LIGHTS
13. OPEN ADJUSTABLE SHELVINGS WITH LOCKABLE DOOR SECTION
14. BASE CABINETS WITH PLAS. LAM. COUNTERTOP AND UPPER CABINETS. PROVIDE UNDER CABINET TASK LIGHTS.
15. STAINLESS STEEL SINK WITH FAUCET AND LEVER CONTROL HANDLES. SEE DET. 17/A9–0.1
16. PROVIDE ⅝" THK. TYPE "X" GYPSUM BOARD TO MAINTAIN WALL RATING AT PERIMETER WALLS INSIDE TEMP. EVIDENCE STORAGE, PRIOR TO INSTALLING SECURITY STEEL MESH, ASM .75–9F OVER 1–LAYER ⅝" THK. GYPSUM BOARD.
17. SEMI–RECESSED FIRE EXTINGUISHER CABINET, SEE DETAIL 12/A9–0.1
18. PROVIDE 6"X20 GA. METAL STUDS @ 16" O.C. AT THIS WALL.
19. (E) RATED WALL TO REMAIN. PROTECT FROM ANY DAMAGES DURING DEMOLITION AND CONSTRUCTION.

NOTES:

1. PREPARE WALLS, FLOOR AND CEILING AS REQUIRED PRIOR TO RECEIVING NEW FINISHES.
2. ALL EXISTING ITEMS NOT PART OF SCOPE OF WORK SHALL REMAIN AND TO BE PROTECTED DURING CONSTRUCTION. ANY DAMAGE INCURRED SHALL BE REPAIRED TO MATCH EXISTING CONDITION.
3. ALL WALL MOUNTED CASEWORK, FIXTURES AND EQUIPMENT SHALL BE SUPPORTED WITH 6"X16 GA. TRACK BACKING, SEE DETAIL G/A9–2.1
4. FOR TYP. STUD FRAMING DETAILS, REFER TO SHEETS A9–2.1 AND A9–2.2

CITY of TORRANCE
POLICE FACILITY
Torrance, California

Consultants

TETRA -IBI Group
ARCHITECTS & PLANNERS
2035 Wilshire Boulevard, Suite 1185
Los Angeles, CA 90057-3620
PHONE 213.250-7440 FAX 213 481-9947

LICENSED ARCHITECT
DARRELL RUSSELL PARKER
NO. C 7568
RENEW: 31-12
STATE OF CALIFORNIA

Drawn by: MM
Checked by: KS
Date: 09/19/11

No.	Revision	Date
A.	ISSUE FOR REVIEW	11–21
B.	ISSUE FOR PLAN CHECK	12–22
C.	PLAN CHECK RESUBMIT	05–15

Project

TORRANCE POLICE DEPT.
New Forensic Science Laboratory

3300 Civic Center Dr.,
Torrance, CA. 90503

Drawing Title

PARTITION PLAN

Project Number: 30257
Scale: AS NOTED
Set:
Drawing Number

A2-0.1

SCALE
1/4"=1'–0"

BASEMENT LEVEL - PARTITION PLAN

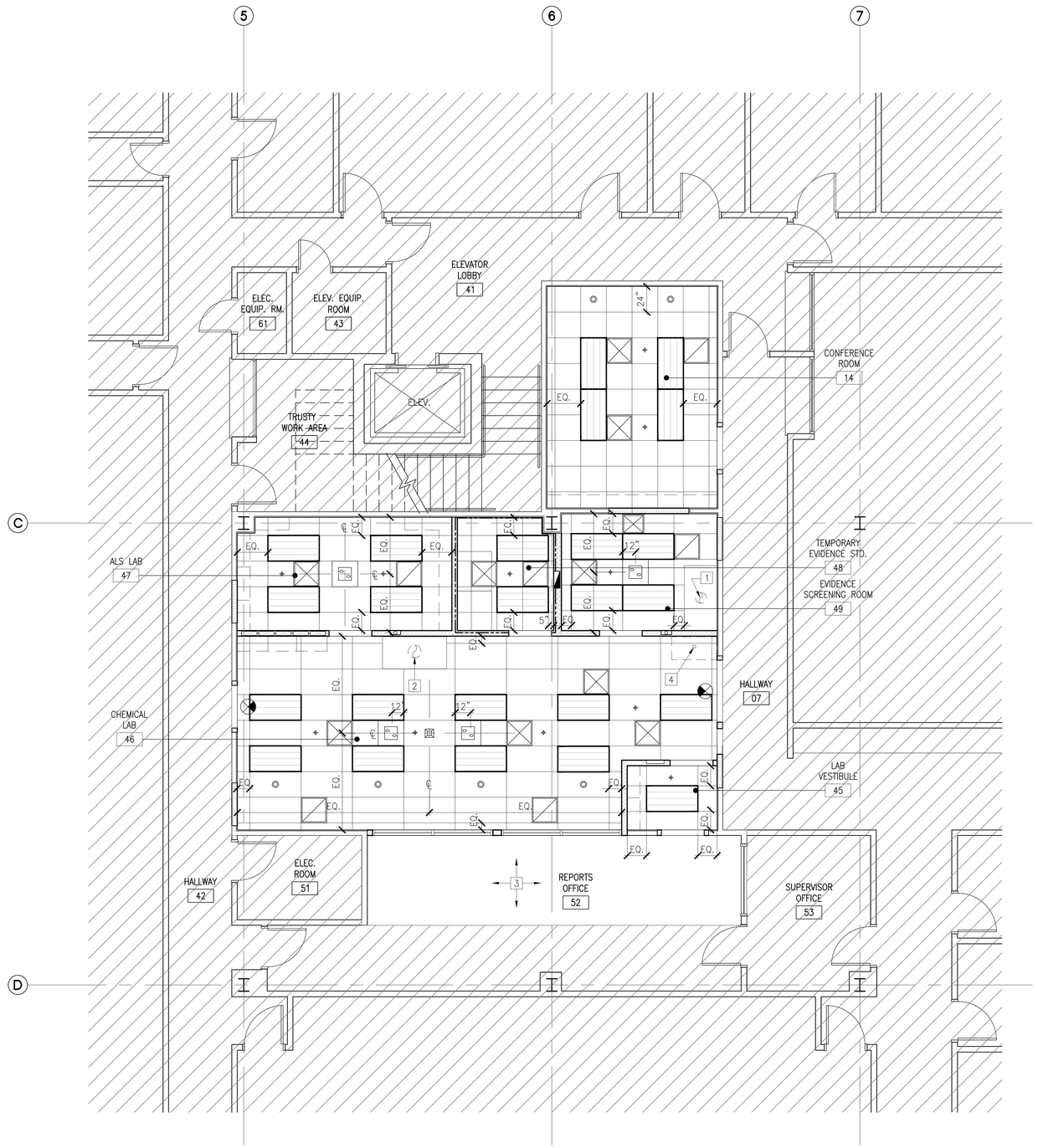

LEGEND:

(N) 24"X48" ACOUSTIC CEILING TILES AND METAL GRID SYSTEM
TILES: ARMSTRONG, CLEAN ROOM OPTIMA, SQUARE TEGULAR
GRIDS: ARMSTRONG, 15/16" CLEAN ROOM

(N) 24"X24" ACOUSTIC CEILING TILES AND METAL GRID SYSTEM
TILES: ARMSTRONG, OPTIMA OPEN PLAN, SQUARE TEGULAR
GRIDS: ARMSTRONG, 15/16" OPTIMA

(N) 24"X48" RECESSED MOUNTED LIGHT FIXTURES

(N) 6" DIAM. RECESSED COMPACT FLUORESCENT LIGHT FIXTURES (DIMMABLE)

(N) PULL DOWN CEILING MOUNTED ELECTRICAL POWER OUTLETS

(N) CEILING MOUNTED TASK EXHAUST UNIT AND MTI-25 CEILING BRACKETS

(N) 24"X24" SUPPLY AIR REGISTERS

(N) 18"X20" SUPPLY AIR REGISTERS

(N) 24"X24" RETURN AIR GRILLES OR MAKE-UP AIR REGISTERS

(N) CEILING MOUNTED FIRE EXIT SIGN

(R) FIRE SPRINKLER HEAD, SEE NOTE #4

N.I.C. (NOT IN CONTRACT) AREAS

(N) DENOTES "NEW"

(R) DENOTES "RELOCATED" EXISTING

KEYNOTES:

1. 10" DIA. STAINLESS STEEL FUME HOOD EXHAUST DUCT
2. 12" DIA. STAINLESS STEEL EXHAUST DUCT DOWN TO FUME HOOD EXHAUST OPENING
3. (E) SUSPENDED ACOUSTIC CEILING IN THIS ROOM TO REMAIN, U.N.O.
4. 2" DIAM. EXHAUST DOWN TO CYANOACRYLATE (SUPERGLUE) UNIT EXHAUST OPENING

NOTES:

1. FOR TYP. SUSPENDED ACOUSTIC CEILING DETAILS, REFER TO SHEET A9-1.1
2. NEW SUSPENDED CEILING HEIGHT @ 8'-0" A.F.F., TYP., U.N.O.
3. NEW RECESSED LIGHT FIXTURES TO BE AT CENTERLINE OF TILES, TYP.
4. AUTOMATIC FIRE SPRINKLER TO BE DESIGNED AND INSTALLED UNDER SEPARATE PERMIT
5. REFER TO ELECTRICAL AND MECHANICAL DRAWINGS FOR ADDITIONAL INFORMATION.

CITY of TORRANCE
POLICE FACILITY
Torrance, California

Consultants

TETRA -IBI Group
ARCHITECTS & PLANNERS
2055 Wilshire Boulevard, Suite 1885
Los Angeles, CA 90057-5602
PHONE 213 250-7440 FAX 213 481-0947

LICENSED ARCHITECT
GERALD RUSSELL PEARCE
NO. C 7568
REN.10-31-13
STATE OF CALIFORNIA

Drawn by: MM
Checked by: KS
Date: 09/19/11

No.	Revision	Date
A.	ISSUE FOR REVIEW	11-21
B.	ISSUE FOR PLAN CHECK	12-22
C.	PLAN CHECK RESUBMIT	05-15

Project

TORRANCE POLICE DEPT.
New Forensic Science Laboratory

3300 Civic Center Dr.,
Torrance, CA. 90503

Drawing Title

REFLECTED CEILING PLAN

Project Number: 30257
Scale: AS NOTED
Set
Drawing Number: A2-1.1

SCALE
1/4"=1'-0"

BASEMENT LEVEL - REFLECTED CEILING PLAN

1

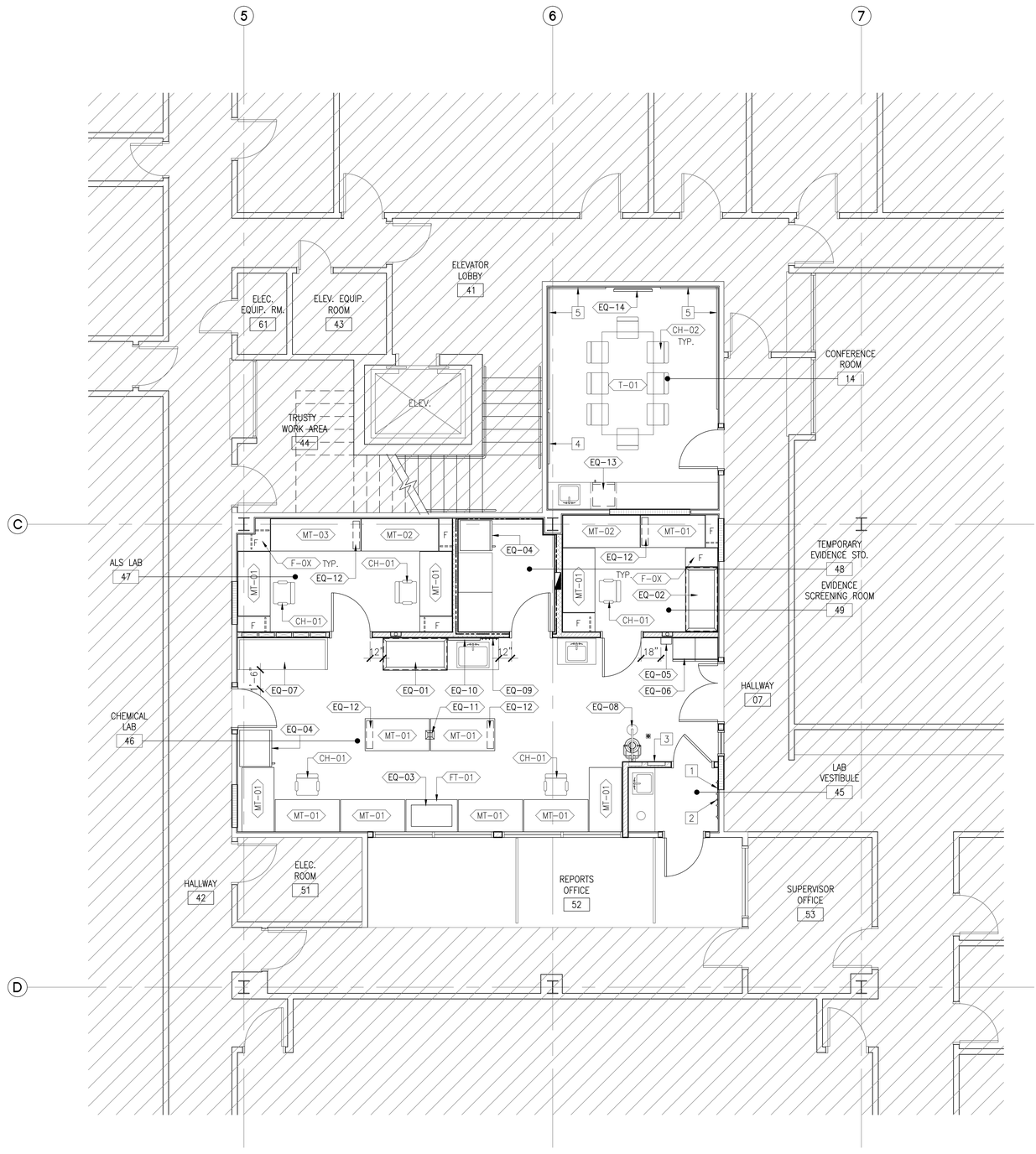

NORTH

KEYNOTES:

1. LABORATORY COAT HOOK, BOBRICK B-232 X 36 HOOK STRIP
2. COAT HOOK (BELOW), BOBRICK B-6827 HAT COAK HOOK
3. RECESSED FIRST AID CABINET
4. TACKABLE BOARD
   MANUF.: PETER PEPPER PRODUCTS, TACKABLE PANELS
   SIZE: 48"(H) X 48"(L)
   FRAME: SLIM TRIM-5
   FABRIC: 080 SANDSTONE
5. WHITE BOARD
   MANUF.: PETER PEPPER PRODUCTS, WRITING SURFACES-PORCELAIN
   SIZE: 48"(H) X LENGHT (SEE ELEVATION)
   FRAME: SLIM TRIM-5
   COLOR: WHITE

FURNITURE LEGEND:

- CH-01 CHAIR, WORK ROOM (N.I.C)
- CH-02 CHAIR, CONFERENCE (N.I.C.)
- MT-01 60"L X 30"W X 36"H, MOBILE TABLES
- MT-02 72"L X 30"W X 36"H, MOBILE TABLES
- MT-03 84"L X 30"W X 36"H, MOBILE TABLES
- T-01 TABLE, CONFERENCE (N.I.C.)
- FC-0X CUSTOM-BUILT FIXED, EPOXY RESIN COUNTERTOP GAP FILLERS (OPTIONAL), SEE TYP. DETAIL 24/A9-0.1. PROVIDE TRACK BACKING.

EQUIPMENT LEGEND:

- EQ-01 CHEMICAL FUME HOOD WITH MATCHING ACID AND FLAMMABLE STORAGE BASE CABINETS BY JAMESTOWN METAL PRODUCTS, LLC.
- EQ-02 CHEMICAL FUME HOOD WITH MATCHING ADA OPEN BASE CABINETS BY JAMESTOWN METAL PRODUCTS, LLC.
- EQ-03 HUMIDIFIER CHAMBER (N.C.)
- EQ-04 REFRIGERATOR (N.I.C.)
- EQ-05 WALL MOUNTED FIRE BLANKET AND SPILL CART
- EQ-06 FLOOR MOUNTED CYANOACRYLATE (SUPERGLUE) CABINET
- EQ-07 CUSTOM BUILT STAINLESS STEEL POWDER DUSTING WORK STATION
- EQ-08 FLOOR MOUNTED EYEWASH AND EMERGENCY SHOWER WITH WATER TEMPERING SYSTEM
- EQ-09 PEG BOARD DRYING RACK
- EQ-10 DI WATER UNIT
- EQ-11 CEILING MOUNTED ARTICULATING TASK EXHAUST UNIT (100 CFM)
- EQ-12 UNDER TABLE MOUNTED BUTCHER PAPER DISPENSER
- EQ-13 UNDER COUNTER REFRIGERATOR (N.I.C.)
- EQ-14 WALL MOUNTED LED TV WITH MOUNTING BRACKET (N.I.C.)

NOTES:

1. ALL WALL MOUNTED CASEWORK, FIXTURES & EQUIPMENTS SHALL BE SUPPORTED WITH 6"X16 GA. TRACK BACKING SEE DETAIL G/A9-2.1
2. SUBMIT MATERIAL AND EQUIPMENT SUBMITTALS FOR THE ARCHITECT'S REVIEW AND APPROVAL.
3. REFER TO SPECIFICATIONS FOR FURNITURE AND EQUIPMENT SPECIFICATIONS. FURNITURE AND EQUIPMENT NOTED AS (N.I.C.) IS NOT INCLUDED IN THIS CONTRACT AND WILL BE FURNISHED BY THE OWNER. CONTRACTOR TO VERIFY AND COORDINATE WITH THE OWNER ALL OWNER'S FURNISHED EQUIPMENT AND FURNITURE PRIOR TO INSTALLATION.

CITY of TORRANCE
POLICE FACILITY
Torrance, California

Consultants

TETRA -IBI Group
ARCHITECTS & PLANNERS
2055 Wilshire Boulevard, Suite 1185
Los Angeles, CA 90057-3602
PHONE 213 250-7440 FAX 213 481-9947

LICENSED ARCHITECT
GEORGE RUSSELL SCHEER
NO. C 7568
RENEWAL 08-31-13
STATE OF CALIFORNIA

Drawn by: MM
Checked by: KS
Date: 09/19/11

No.	Revision	Date
A.	ISSUE FOR REVIEW	11-21
B.	ISSUE FOR PLAN CHECK	12-22
C.	PLAN CHECK RESUBMIT	05-15

Project

TORRANCE POLICE DEPT.
New Forensic Science Laboratory

3300 Civic Center Dr.,
Torrance, CA. 90503

Drawing Title

FURNITURE & EQUIPMENT PLAN

Project Number: 30257
Scale: AS NOTED
Set:
Drawing Number

A2-2.1

SCALE
1/4"=1'-0"

BASEMENT LEVEL - FURNITURE & EQUIPMENT PLAN

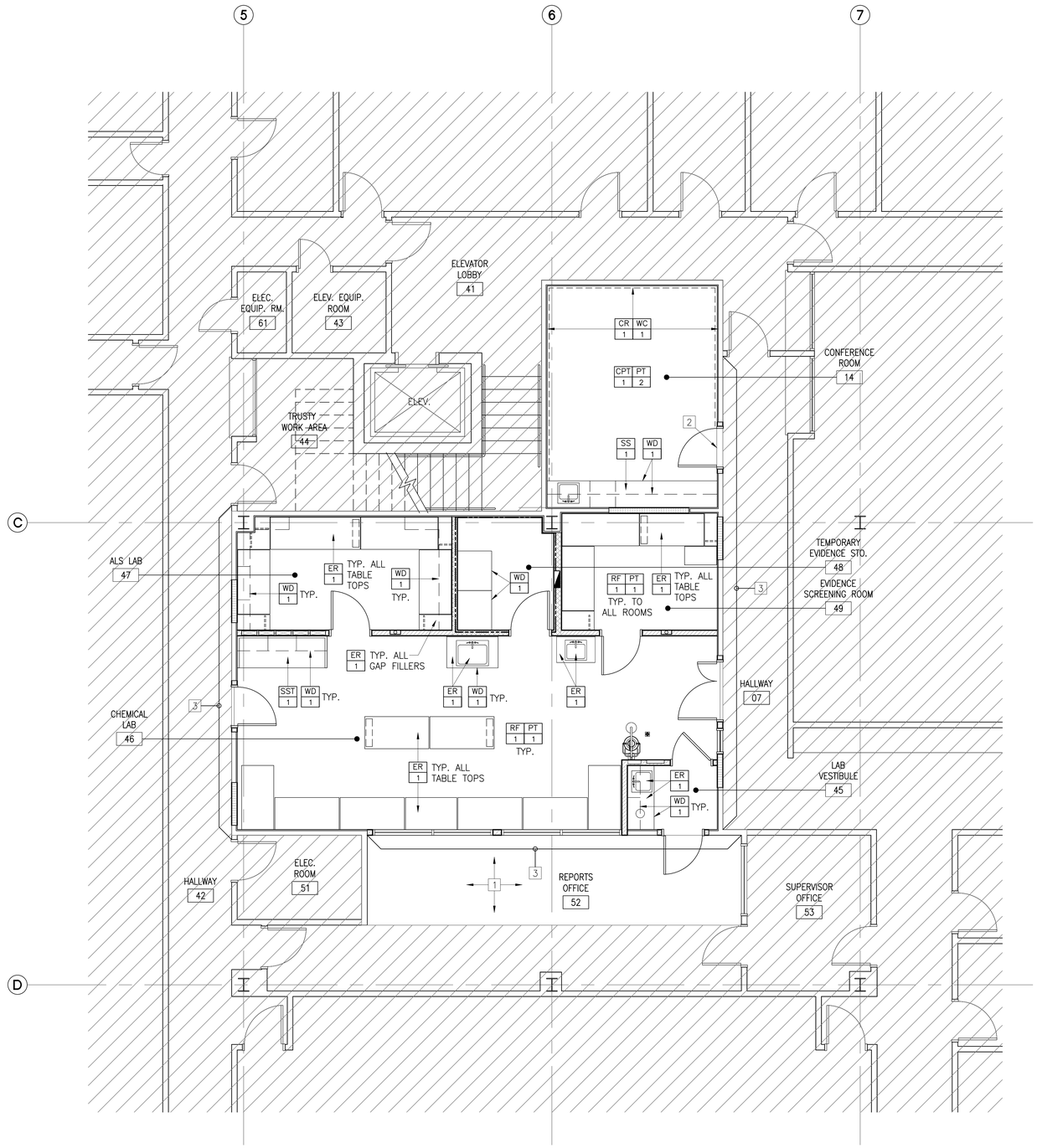

KEYNOTES:

1. EXISTING FLOORCOVERING IN THIS ROOM TO REMAIN. PROTECT DURING CONSTRUCTION.
2. PROVIDE THRESHOLD, SEE DET. 20/A9-0.1
3. RE-PAINT THIS WALL TO MATCH ADJACENT WALL PAINT, DUNN-EDWARDS "WHISPER GRAY". REMOVE AND REPLACE (E) WALL BASE TO MATCH EXISTING.

FINISH SCHEDULE:

PAINT:

PT 1 (GENERAL PAINT)
MANUF.: SHERWIN-WILLIAMS,
TYPE: GPS SANIFIBER
COLOR: WHITE

PT 2 (CONF. ROOM)
MANUF.: BENJAMIN MOORE
COLOR: ABINGDON PUTTY, HC-99

PT 3 (DOOR & WINDOW FRAMES)
COLOR: TO MATCH EXISTING

CARPET TILE:

CPT 1 (CONF. ROOM)
MANUF.: TANDUS FLOORING
STYLE: 03546 SPRING EQUINOX
COLOR: 48506 LENTIL

RESILIENT SHEET FLOOR:

RF 1 MANUF.: ARMSTRONG
STYLE: MEDINTECH HOMOGENEOUS
COLOR: 88497, BRUSHED SAND
PATTERNED WELD ROD: WM497

RUBBER BASE:

RB 1 (WALL BASE, TYP.)
MANUF.: FLEXCO WALL BASE
STYLE: 4" HIGH, COVE
COLOR: BARK #02

SOLID SURFACE:

SS 1 (CONF. ROOM COUNTERTOP & BACKSPLASH)
MANUF.: AVONITE
STYLE: STUDIO COLLECTION
COLOR: NEW CALDRON, K3-8320

EPOXY RESIN:

ER 1 (LAB COUNTERTOP, BACKSPLASH & UNDER-MOUNT SINK, MOBILE TABLE TOPS & GAP FILLERS)
MANUF.: SAMSUNG
STYLE: STARON
COLOR: ASPEN BROWN, AB632

WOOD:

WD 1 CABINET DOORS & DRAWERS, TYP.
STAIN TO MATCH PL-1

STAINLESS STEEL:

SST 1 CUSTOM DUSTING WORK SURFACE & BACK SPLASH
TYPE 304, 14 GA.

STAIN:

ST 1 OFFICE/ROOM DOORS, TYP.
COLOR: TO MATCH EXISTING

PL 1 MANUF.: WILSONART LAMINATE
COLOR: 7061-60, NATURAL PEAR

WAINSCOAT:

WC 1 MANUF.: ACROVYN
STYLE: PEBBELETTE TEXTURA
COLOR: #920, ALMOND

CHAILRAIL:

CR 1 MANUF.: ACROVYN
STYLE: SCR 40N

FINISH NOTES:

1. PREPARE ALL WALLS, FLOOR AND CEILING AS REQUIRED PRIOR TO RECEIVING NEW FINISHES.
2. PROVIDE NEW COVE RUBBER BASE, RB-1 THROUGHOUT, TYP., U.N.O.
3. SUBMIT MATERIAL SAMPLES FOR ARCHITECT'S REVIEW AND APPROVAL
4. ALL INTERIOR WALLS AND CEILING FINISHES SHALL HAVE FLAME SPREAD CLASSIFICATIONS IN ACCORDANCE WITH CBC TABLE-8A & B (CBC 802.2, 803 & 804)

CITY of TORRANCE
POLICE FACILITY
Torrance, California

Consultants

TETRA -IBI Group
ARCHITECTS & PLANNERS
2055 Wilshire Boulevard, Suite 1885
Los Angeles, CA 90017-5602
PHONE 213 250-7440 FAX 213 481-0947

LICENSED ARCHITECT
STATE OF CALIFORNIA
NO. C 7568
REN.10-31-13

Drawn by: MM
Checked by: KS
Date: 09/19/11

No.	Revision	Date
A.	ISSUE FOR REVIEW	11-21
B.	ISSUE FOR PLAN CHECK	12-22
C.	PLAN CHECK RESUBMIT	05-15

Project

TORRANCE POLICE DEPT.
New Forensic Science Laboratory

3300 Civic Center Dr.,
Torrance, CA. 90503

Drawing Title

FINISH PLAN

Project Number: 30257
Scale: AS NOTED
Set
Drawing Number: A2-3.1

SCALE
1/4"=1'-0"

BASEMENT LEVEL - FINISH PLAN 1

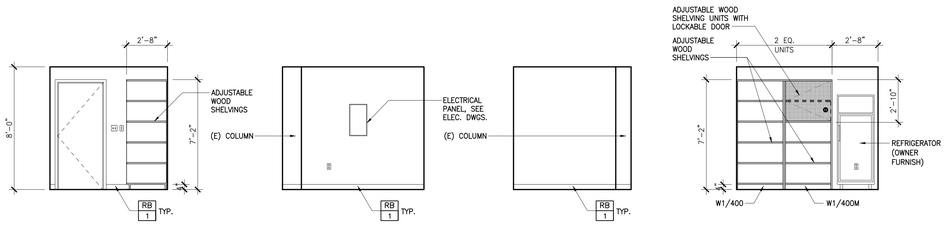

D ELEVATION C ELEVATION B ELEVATION A ELEVATION

SCALE 1/4"=1'-0"

WALL ELEVATIONS - TEMPORARY EVIDENCE STORAGE 6

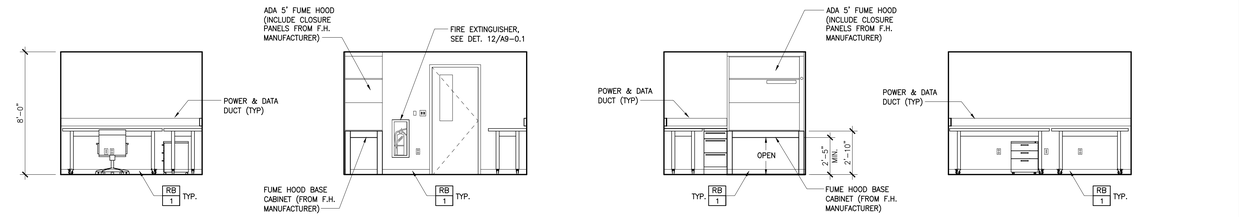

D ELEVATION C ELEVATION B ELEVATION A ELEVATION

SCALE 1/4"=1'-0"

WALL ELEVATIONS - EVIDENCE SCREENING 3

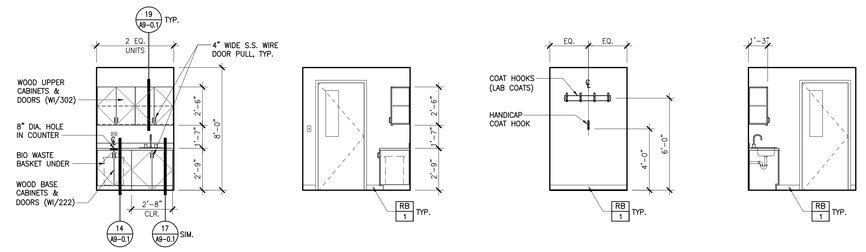

D ELEVATION C ELEVATION B ELEVATION A ELEVATION

SCALE 1/4"=1'-0"

WALL ELEVATIONS - LAB VESTIBULE 5

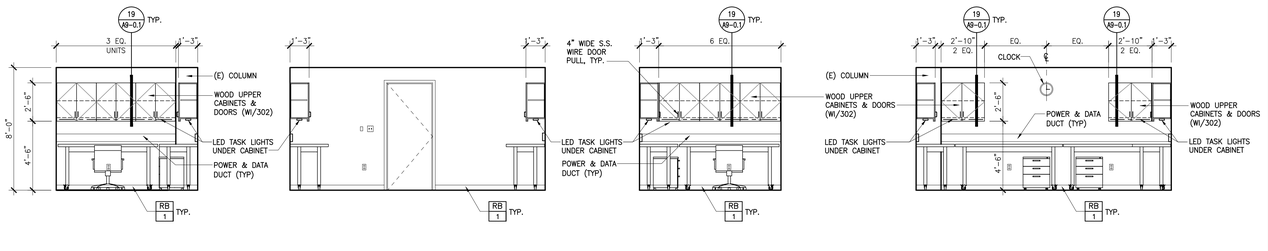

D ELEVATION C ELEVATION B ELEVATION A ELEVATION

SCALE 1/4"=1'-0"

WALL ELEVATIONS - ALS LAB 2

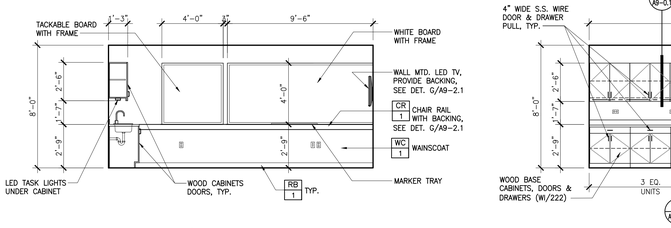

D ELEVATION

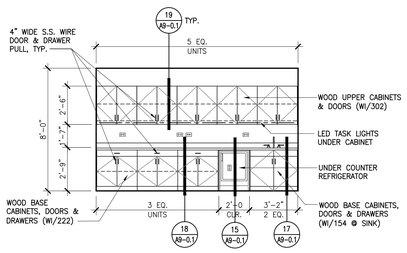

C ELEVATION

NOTE: WOOD INSTITUTE (WI), MANUAL OF MILLWORK STANDARD OF THE MILLWORK INDUSTRY, REFER TO SUPPLEMENT-2 FOR CASEWORK DESIGN SERIES

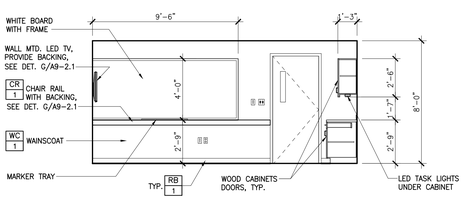

B ELEVATION

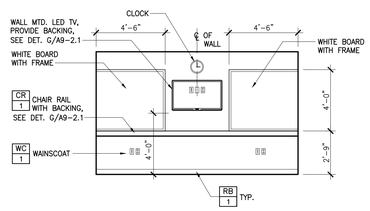

A ELEVATION

SCALE 1/4"=1'-0"

WALL ELEVATIONS - CONFERENCE ROOM 4

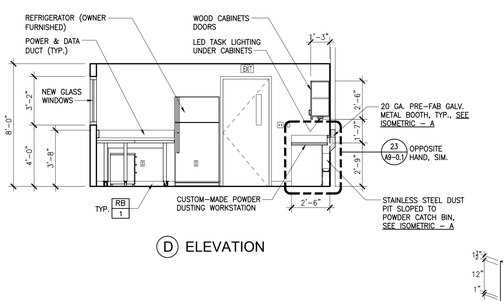

D ELEVATION

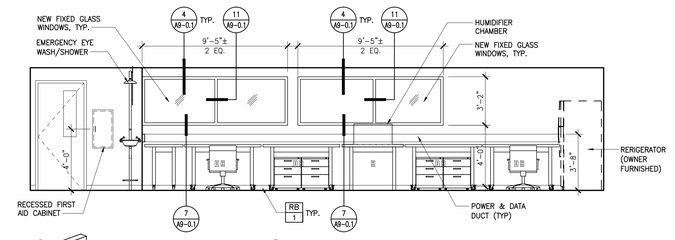

C ELEVATION

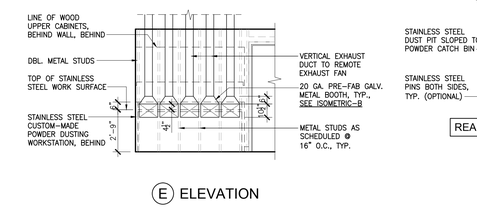

E ELEVATION

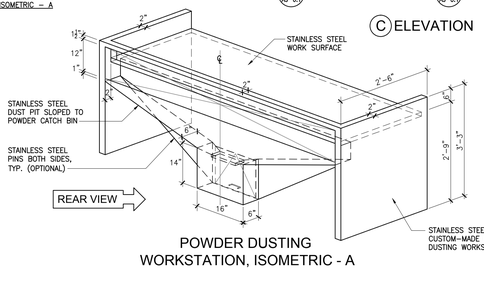

POWDER DUSTING WORKSTATION, ISOMETRIC - A

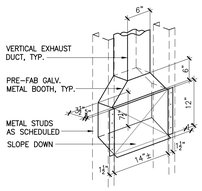

TYP. PRE-FAB BOOTH ISOMETRIC - B

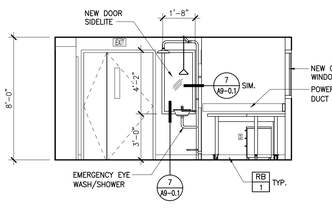

B ELEVATION

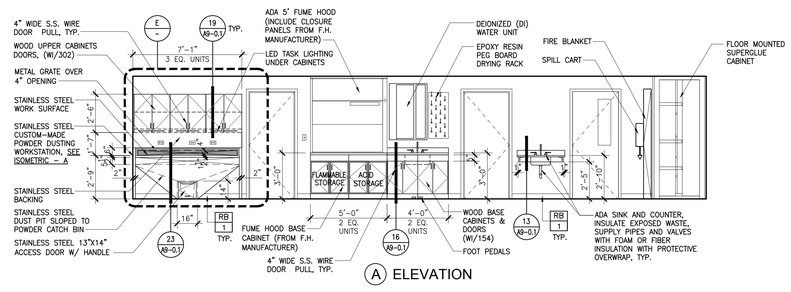

A ELEVATION

SCALE 1/4"=1'-0"

WALL ELEVATIONS - CHEMICAL LAB 1

TORRANCE POLICE

CITY of TORRANCE
POLICE FACILITY
Torrance, California

Consultants

TETRA -IBI Group
ARCHITECTS & PLANNERS
2035 Wilshire Boulevard, Suite 1185
Los Angeles, CA 90057-3600
PHONE 213.250-7440 FAX 213 481-9947

LICENSED ARCHITECT
GEORGE RUSSELL GEORGE
NO. C 7568
RENEWAL 31-12
STATE OF CALIFORNIA

Drawn by MM

Checked by KS

Date 09/19/11

No.	Revision	Date
A.	ISSUE FOR REVIEW	11-21
B.	ISSUE FOR PLAN CHECK	12-22
C.	PLAN CHECK RESUBMIT	05-15

Project

TORRANCE POLICE DEPT.
New Forensic Science Laboratory

3300 Civic Center Dr.,
Torrance, CA. 90503

Drawing Title

INTERIOR ELEVATIONS

Project Number 30257

Scale AS NOTED

Set

Drawing Number

A3-0.1

DOOR SCHEDULE

DOOR NO.	DOOR				FRAME			MODE	DETAILS			FIRE RATING	HARDWARE	REMARKS
	SIZE (W x H x T)	TYPE	MATERIAL	FINISH	MATERIAL	FINISH	WIDTH		HEAD	JAMB	THRESHOLD			
01	4'-6" X 7'-0" X 1-3/4"	A	SC	ST	HM	PT	–	PR	8 A9-0.1	8 A9-0.1	21 A9-0.1	20 MIN.	01	
02	3'-0" X 7'-0" X 1-3/4"	C	SC	ST	HM	PT	–	SGL	8 A9-0.1	8 A9-0.1	20 A9-0.1	20 MIN.	03	
03	3'-0" X 7'-0" X 1-3/4"	D	SC	ST	HM	PT	–	SGL	5 A9-0.1	5 A9-0.1	–	–	04	
04	3'-0" X 7'-0" X 1-3/4"	D	SC	ST	HM	PT	–	SGL	5 A9-0.1	5 A9-0.1	–	–	05	
05	3'-0" X 7'-0" X 1-3/4"	D	SC	ST	HM	PT	–	SGL	5 A9-0.1	5 A9-0.1	–	–	05	
06	3'-0" X 7'-0" X 1-3/4"	B	SC	ST	HM	PT	–	SGL	5 A9-0.1	5 A9-0.1	–	–	07	
07	3'-0" X 7'-0" X 1-3/4"	B	SC	ST	HM	PT	–	SGL	5 A9-0.1	5 A9-0.1	–	–	06	
08	3'-0" X 7'-0" X 1-3/4"	C	SC	ST	HM	PT	–	SGL	8 A9-0.1	8 A9-0.1	21 A9-0.1	20 MIN.	02	

DOOR NOTES

1. RE-KEY EXISTING DOOR HARDWARE AS DIRECTED BY THE TORRANCE POLICE DEPARTMENT STANDARDS.
2. ALL NEW AND/OR REUSED LOCKSETS/LATCHSETS MUST MEET CURRENT ADA REQUIREMENTS.
3. ALL INTERIOR DOOR AND WINDOW FRAMES TO BE HOLLOW METAL FRAMES, COLOR TO MATCH EXISTING.
4. ALL CORRIDOR RATED DOOR FRAMES TO BE HOLLOW METAL FRAME (WELDED TO ONE PIECE), COLOR: TO MATCH EXISTING
5. SEE SHEET A2-3.1 FOR FINISH SCHEDULE

ABBREVIATIONS

AL	ALUMINUM
AN	ANODIZED
HM	HOLLOW METAL
PT	PAINT
ST	STAINED, LACQUER FINISH
SC	SOLID CORE, FLUSH WOOD
PR	PAIR
SGL	SINGLE

DOOR TYPE

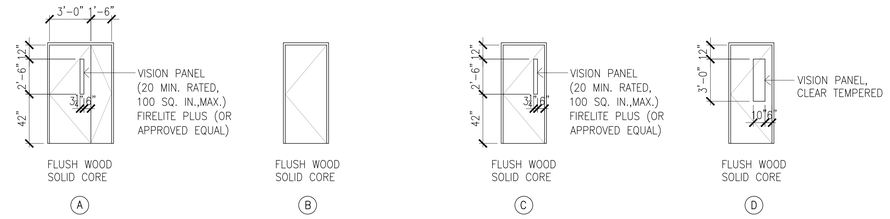

HARDWARE SCHEDULE

HW SET 1 : (3' X 1'-6" LEAF)

5 EA.	HINGE	3CB1 4.5 X 4.5	652	IVE
1 EA.	ELECTRIC HINGE	3CB1 4.5 X 4.5 TW8	652	IVE
1 SET	CONST LATCHING BOLT	FB61P	630	IVE
1 EA.	DUST PROOF STRIKE	DP2	626	IVE
1 EA.	EU STOREROOM LOCK	RX-ND80PDEU RHO 14-042	626	SCH
1 EA.	COORDINATOR	COR X FL COMPLETE	628	IVE
1 EA.	ASTRAGAL	139SP X 2525	600	NGP
2 EA.	SURFACE CLOSER	4040XP RW/PA	689	LCN
2 EA.	KICK PLATE	8400 10" X 1" LDW	630	IVE
2 EA.	DOME STOP	FS438	626	IVE
1 SET	SEALS	155V	AL	NGP
1	–	POWER SUPPLY FOR ELECTRIC LOCKS BY ACCESS CONTROL		
2 EA.	DOOR POSITION SWITCH	679-05 HM	–	SCE
1	–	ASTRAGAL MUST BE PAINTED TO MATCH DOOR FINISH		
1	SECURITY	CARD READER BY ACCESS CONTROL SECTION		
1 EA.	THRESHOLD	THRESHOLD AS REQUIRED		

HW SET 02 :

2 EA.	HINGE	3CB1 4.5 X 4.5	652	IVE
1 EA.	ELECTRIC HINGE	3CB1 4.5 X 4.5 TW8	652	IVE
1 EA.	EU STOREROOM LOCK	RX-ND80PDEU RHO 14-042	626	SCH
1 EA.	SURFACE CLOSER	4040XP RW/PA	689	LCN
1 EA.	KICK PLATE	8400 10" X 2" LDW	630	IVE
1 EA.	WALL STOP	WS401CVX	626	IVE
1 SET	SEALS	155V	AL	NGP
1	–	POWER SUPPLY FOR ELECTRIC LOCKS BY ACCESS CONTROL		
2 EA.	DOOR POSITION SWITCH	679-05 HM	–	SCE
1	SECURITY	CARD READER BY ACCESS CONTROL SECTION		
1 EA.	THRESHOLD	THRESHOLD AS REQUIRED		

HW SET 03 :

3 EA.	HINGE	3CB1 4.5 X 4.5	652	IVE
1 EA.	CLASSROOM LOCK	ND70PD RHO	626	SCH
1 EA.	SURFACE CLOSER	4040XP SCUSH	689	LCN
1 EA.	KICK PLATE	8400 10" X 2" LDW	630	IVE
1 SET	SEALS	155V	AL	NGP
1 EA.	THRESHOLD	THRESHOLD AS REQUIRED		

HW SET 04 :

3 EA.	HINGE	3CB1 4.5 X 4.5	652	IVE
1 EA.	ENTRANCE LOCK	ND53PD RHO	626	SCH
1 EA.	SURFACE CLOSER	4040XP HW/PA	689	LCN
1 EA.	KICK PLATE	8400 10" X 2" LDW	630	IVE
1 EA.	WALL STOP	WS401CVX	626	IVE
1 SET	SEALS	155V	AL	NGP

HW SET 05 :

3 EA.	HINGE	3CB1 4.5 X 4.5	652	IVE
1 EA.	EU STOREROOM LOCK	RX-ND80PDEU RHO 14-042	626	SCH
1 EA.	OVERHEAD STOP	900S SERIES	630	GLY
1	–	POWER SUPPLY FOR ELECTRIC LOCKS BY ACCESS CONTROL		
1 EA.	DOOR POSITION SWITCH	679-05 HM	–	SCE
1	SECURITY	CARD READER BY ACCESS CONTROL SECTION		

HW SET 06 :

3 EA.	HINGE	3CB1 4.5 X 4.5	652	IVE
1 EA.	EU STOREROOM LOCK	RX-ND80PDEU RHO 14-042	626	SCH
1 EA.	WALL STOP	WS401CVX	626	IVE
1	–	POWER SUPPLY FOR ELECTRIC LOCKS BY ACCESS CONTROL		
1 EA.	DOOR POSITION SWITCH	679-05 HM	–	SCE
1	SECURITY	CARD READER BY ACCESS CONTROL SECTION		

HW SET 06 :

3 EA.	HINGE	3CB1 4.5 X 4.5	652	IVE
1 EA.	EU STOREROOM LOCK	RX-ND80PDEU RHO 14-042	626	SCH
1 EA.	WALL STOP	WS401CVX	626	IVE
1	–	POWER SUPPLY FOR ELECTRIC LOCKS BY ACCESS CONTROL		
1 EA.	DOOR POSITION SWITCH	679-05 HM	–	SCE
1	SECURITY	BIOMETRIC READER BY ACCESS CONTROL SECTION		

CITY of TORRANCE
POLICE FACILITY
Torrance, California

Consultants

TETRA -IBI Group
ARCHITECTS & PLANNERS
2055 Wilshire Boulevard, Suite 1185
Los Angeles, CA 90057-3610
PHONE 213.250-7440 FAX 213 481-9947

LICENSED ARCHITECT
GEORGE RUSSELL BERRY
NO. C 7568
RENEW-31-13
STATE OF CALIFORNIA

Drawn by: MM
Checked by: KS
Date: 09/19/11

No.	Revision	Date
A.	ISSUE FOR REVIEW	11-21
B.	ISSUE FOR PLAN CHECK	12-22
C.	PLAN CHECK RESUBMIT	05-15

Project

TORRANCE POLICE DEPT.
New Forensic Science Laboratory

3300 Civic Center Dr.,
Torrance, CA. 90503

Drawing Title

DOOR & HARDWARE SCHEDULE

Project Number: 30257
Scale: N.T.S.
Set:
Drawing Number

A7-0.1

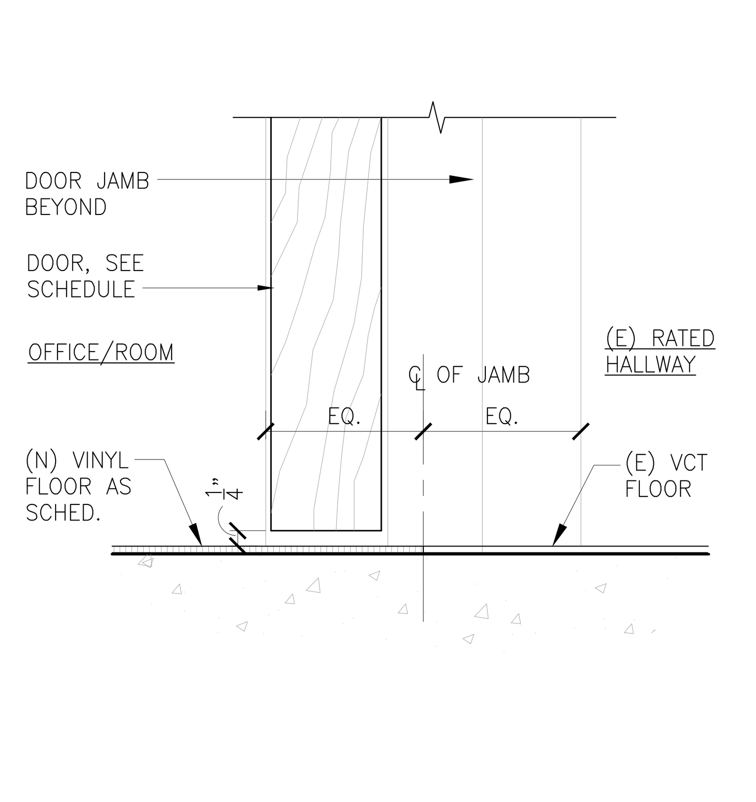

21 Detail: FLOOR FINISH TRANSITION @ DOOR
CAD File: DET-12 Scale: 6"=1'-0"

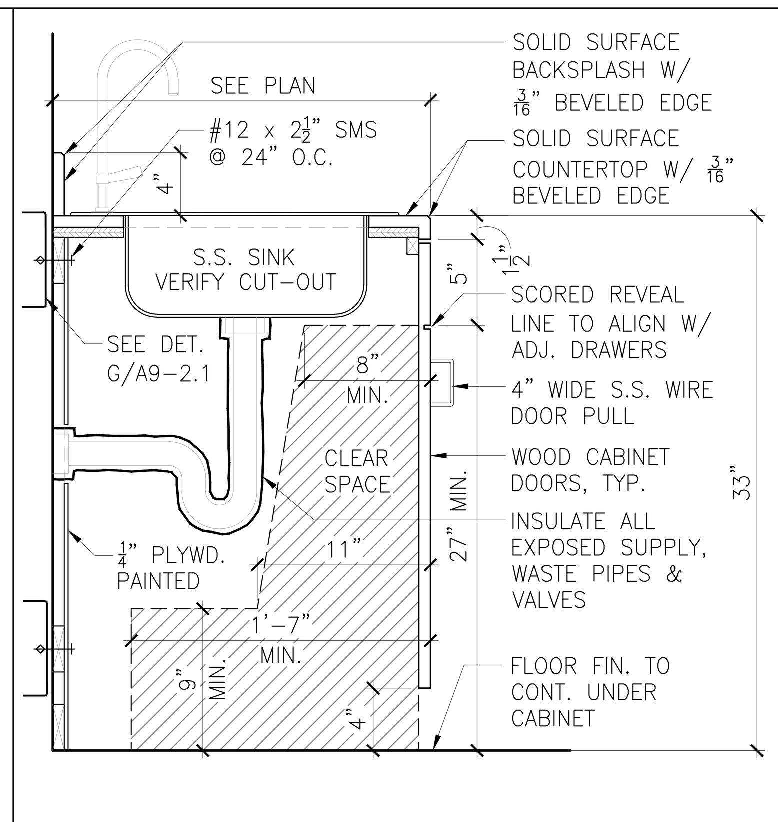

17 Detail: ACCESSIBLE SINK CABINET SECTION
CAD File: DET-09 Scale: 1 1/2"= 1'-0"

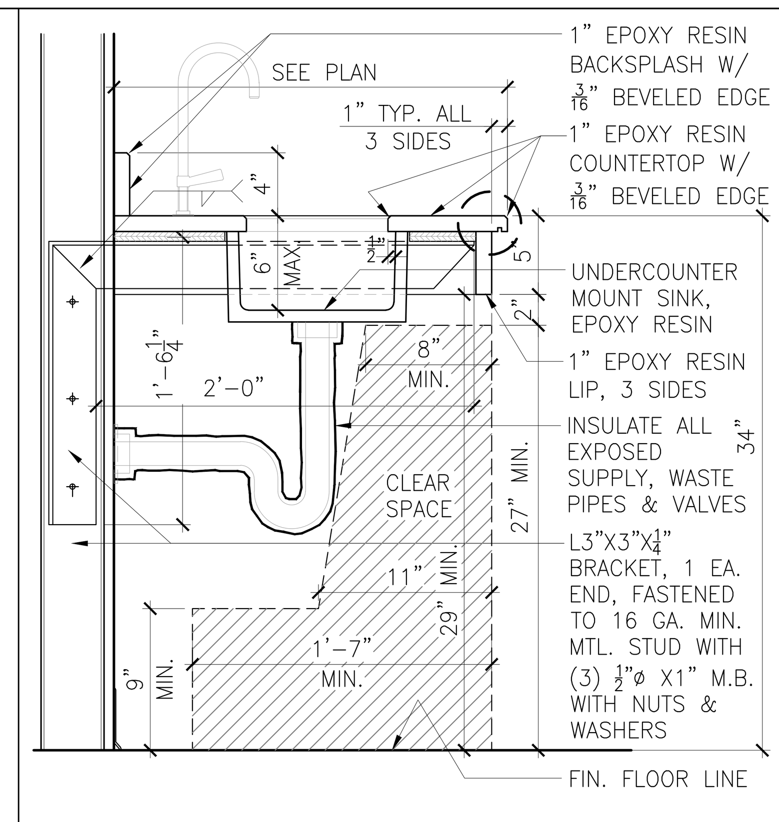

13 Detail: SUSPENDED ACCESSIBLE SINK SECTION
CAD File: DET-13 Scale: 1 1/2"= 1'-0"

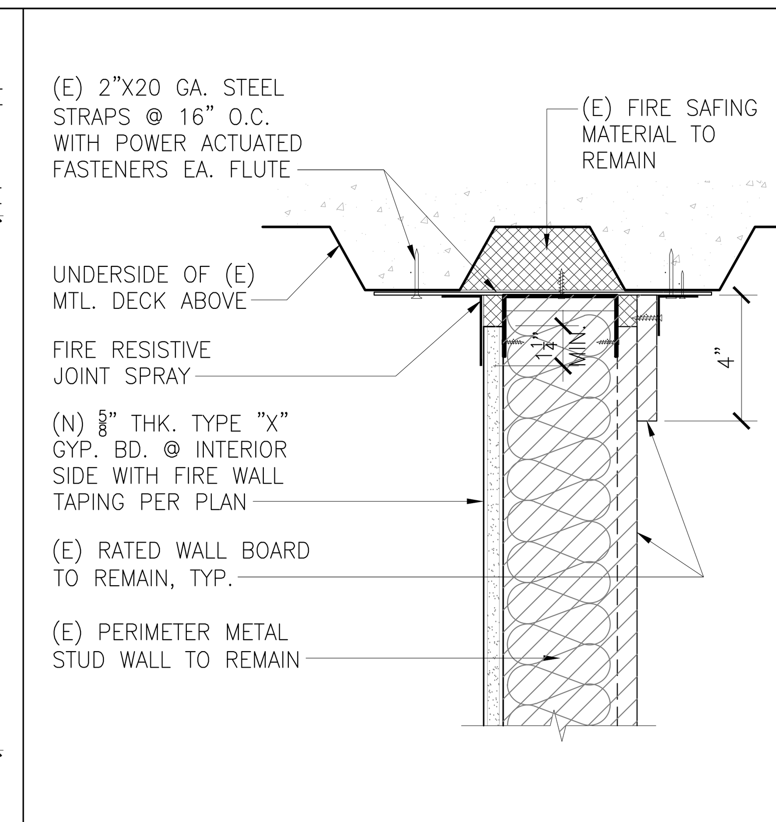

9 Detail: SECTION - (E) RATED PERIMETER WALL TOP DET.
CAD File: DET-09 Scale: 3"= 1'-0"

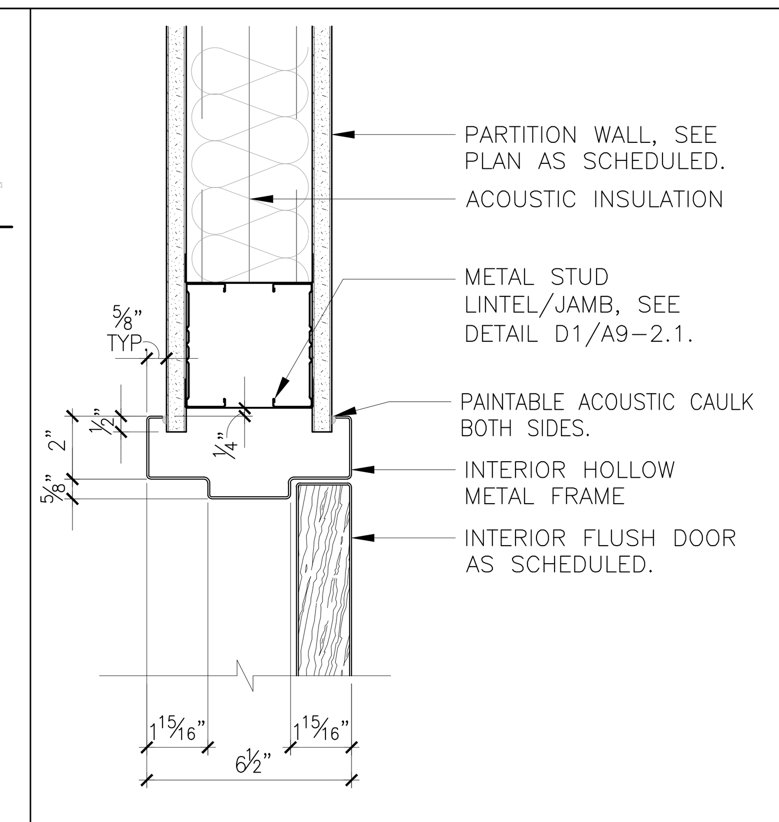

5 Detail: SECTION - DOOR HEAD/JAMB DETAIL
Scale: 3"= 1'-0" CAD File: DR_DETAIL-011B

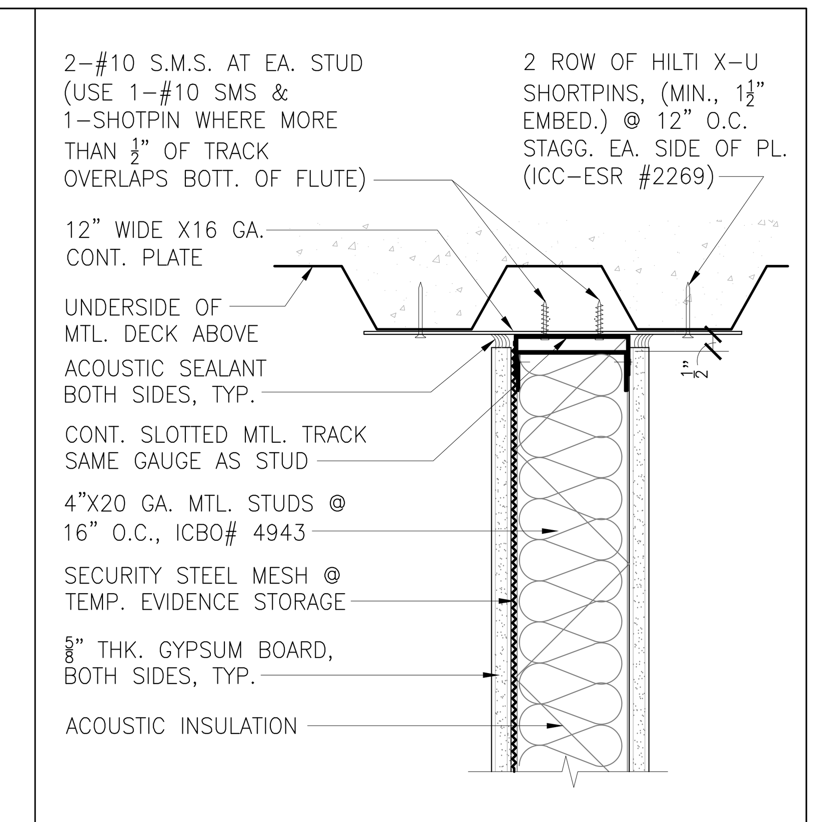

1 Detail: SECTION - PARTITION WALL TOP ANCHORAGE
CAD File: DET-01A Scale: 3"= 1'-0"

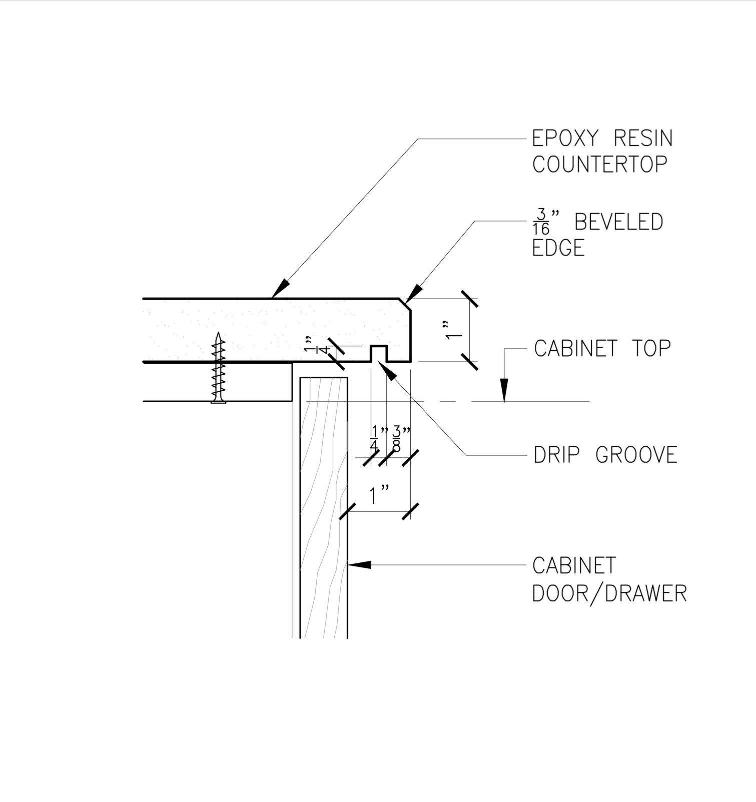

22 Detail: TYP. EPOXY RESIN COUNTER EDGE DETAIL
CAD File: DET-22 Scale: 6"=1'-0"

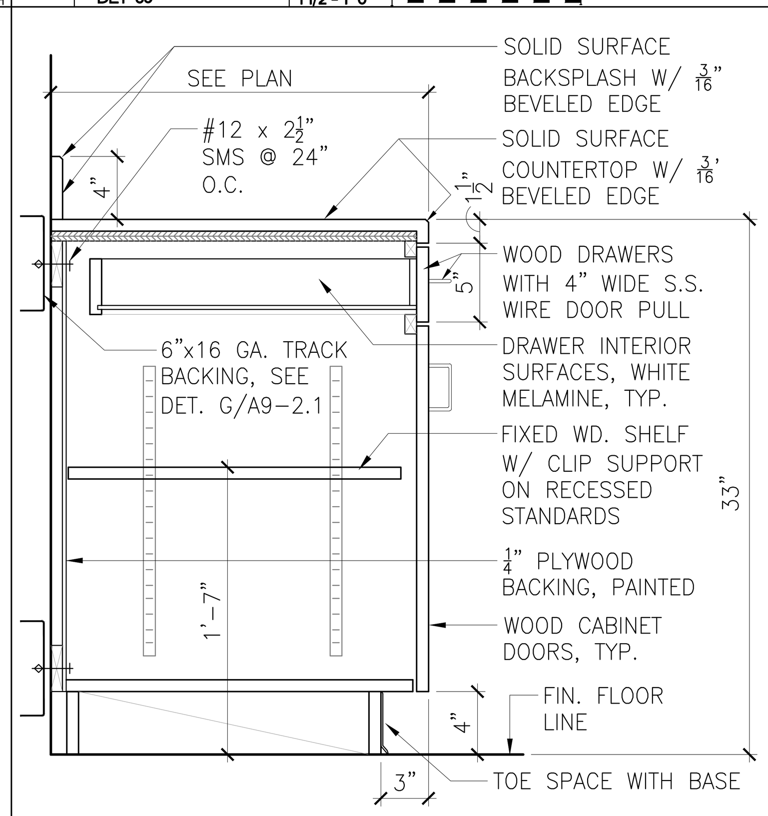

18 Detail: BASE CABINET WITH DRAWER SECTION
CAD File: DET-18 Scale: 1 1/2"= 1'-0"

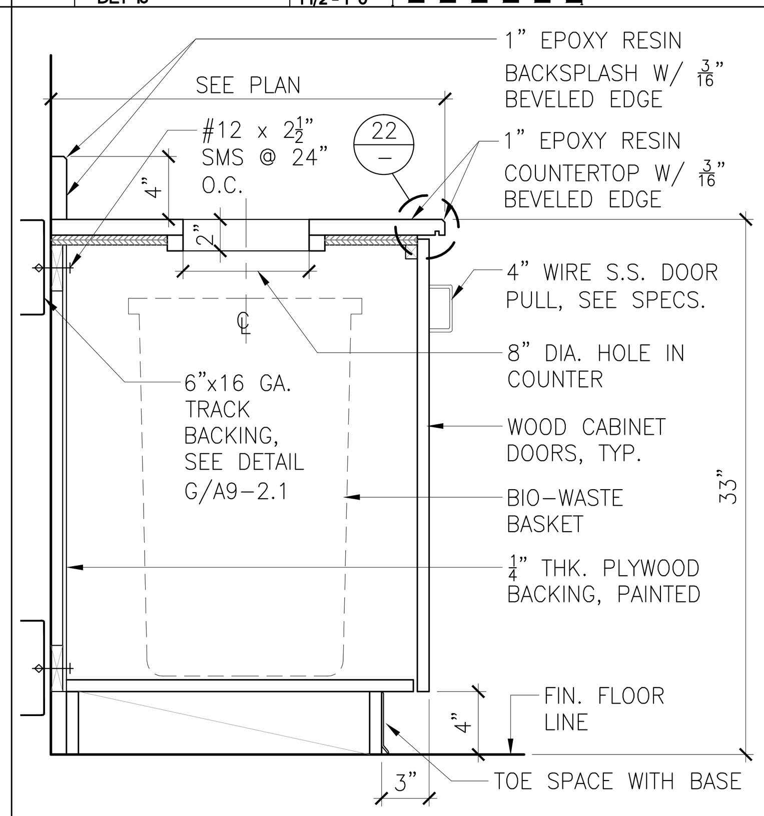

14 Detail: BASE CABINET W/ UNDERCOUNTER BIO WASTE BASKET
CAD File: DET-14 Scale: 1 1/2"= 1'-0"

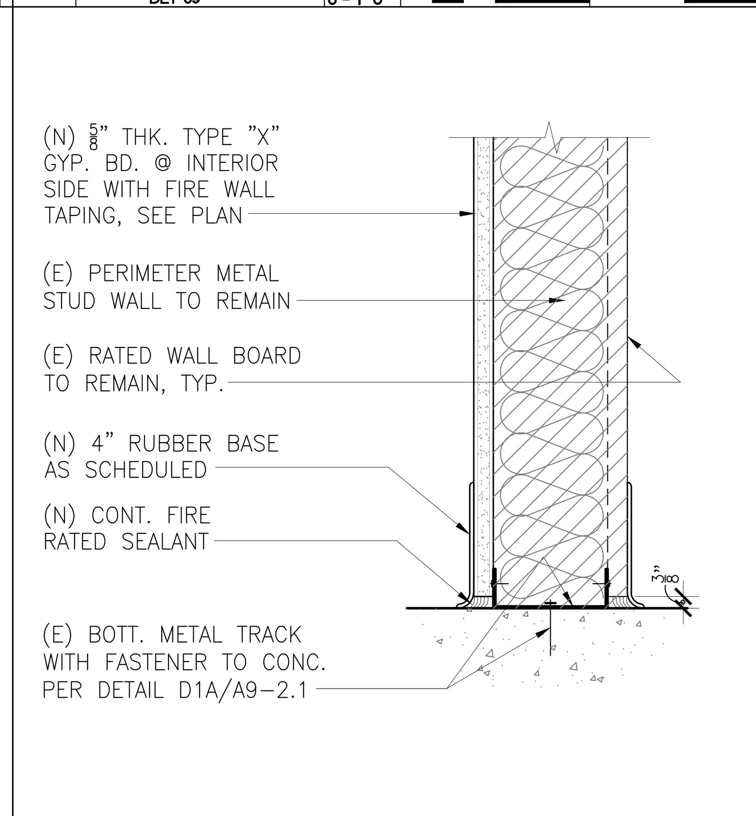

10 Detail: SECTION - (E) RATED PERIMETER WALL BOTT. DET.
CAD File: DET-10 Scale: 3"= 1'-0"

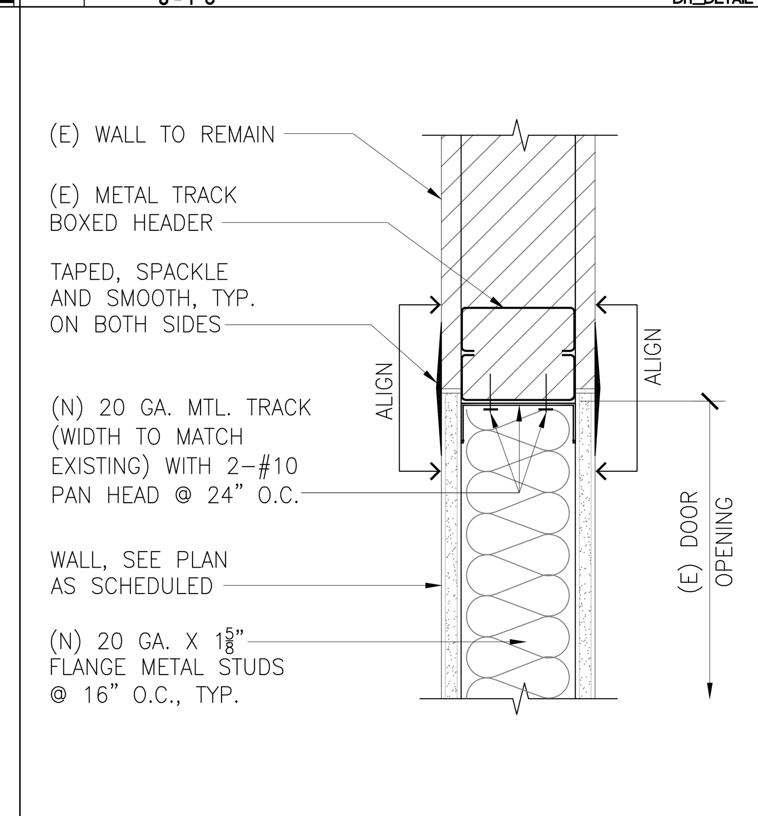

6 Detail: SECTION - NEW WALL INFILL
CAD File: DET-06 Scale: 3"= 1'-0"

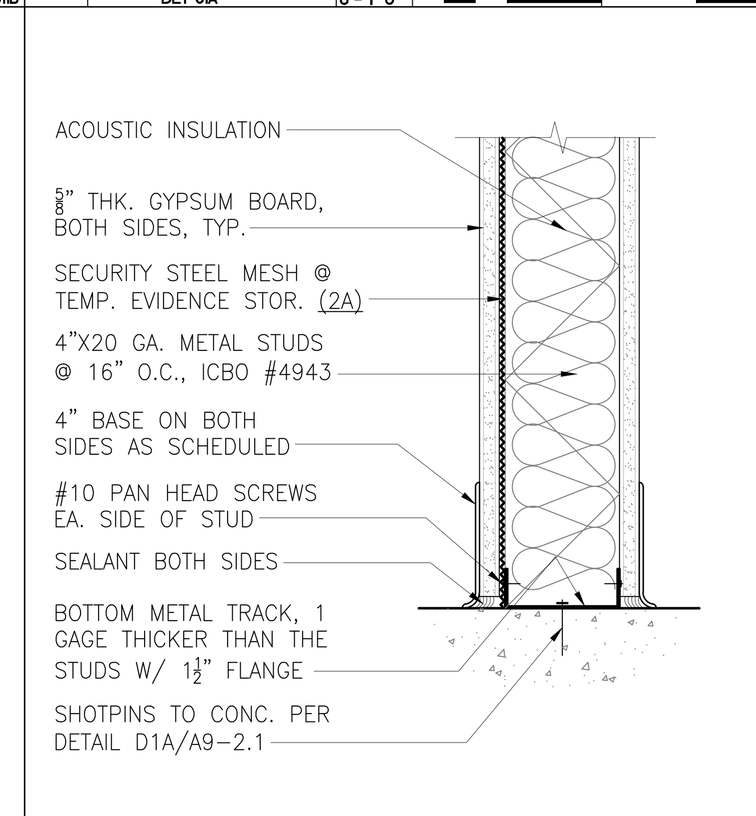

2 Detail: SECTION - PARTITION WALL BOTT. ANCHORAGE
CAD File: DET-02 Scale: 3"= 1'-0"

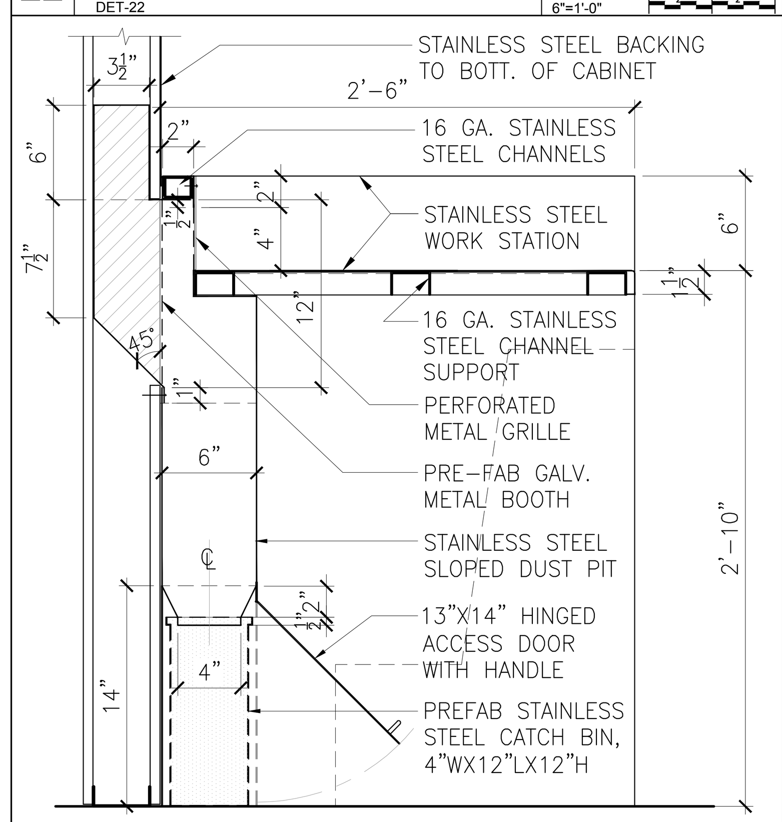

23 Detail: POWDER DUSTING WORK COUNTER SECTION
CAD File: DET-23 Scale: 1 1/2"= 1'-0"

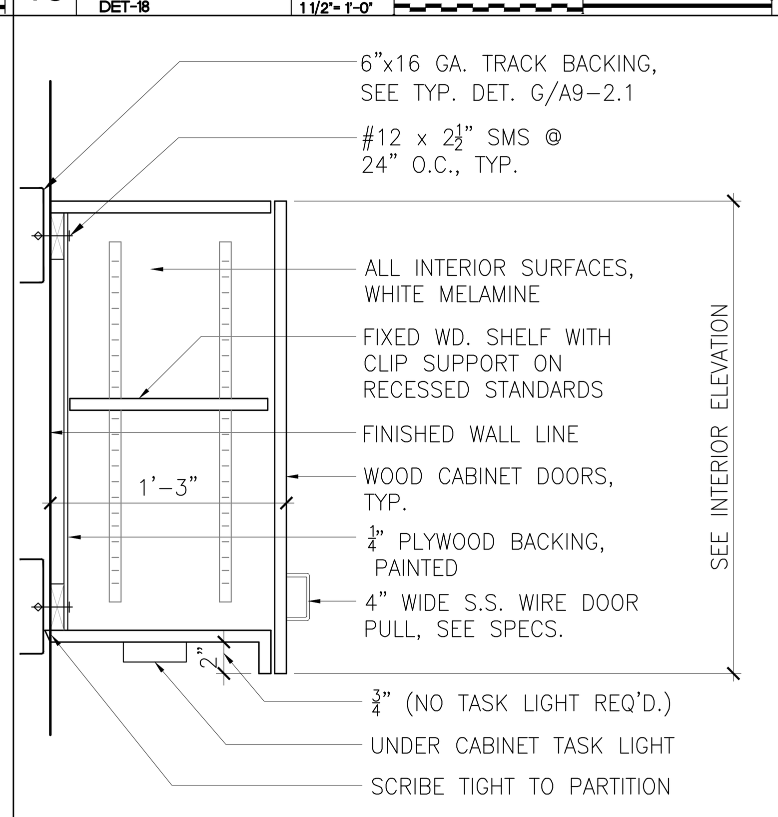

19 Detail: UPPER CABINET SECTION
CAD File: DET-19 Scale: 1 1/2"= 1'-0"

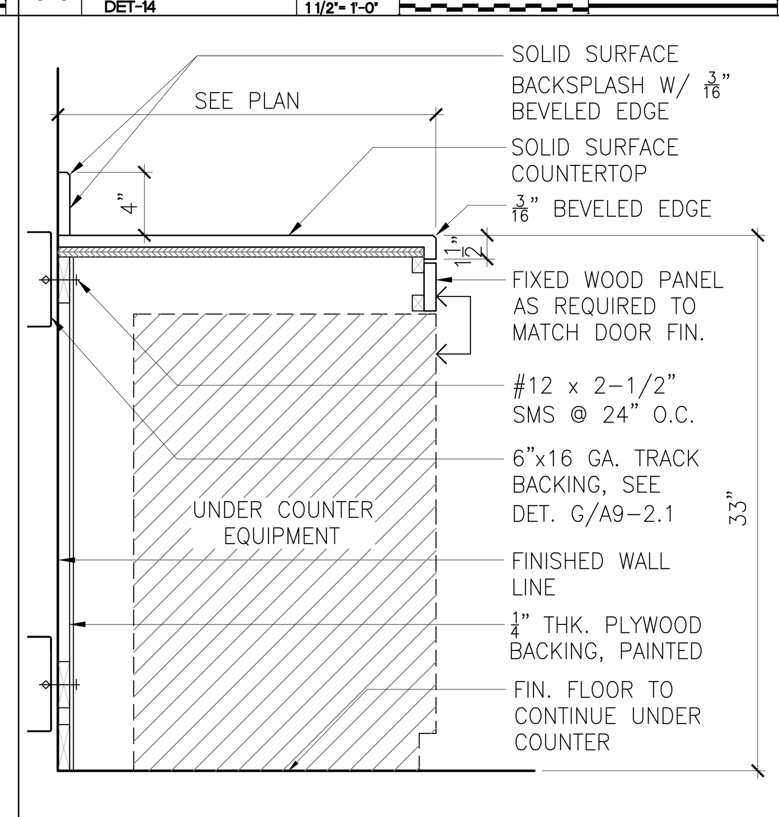

15 Detail: OPEN BELOW COUNTERTOP SECTION
CAD File: DET-15 Scale: 1 1/2"= 1'-0"

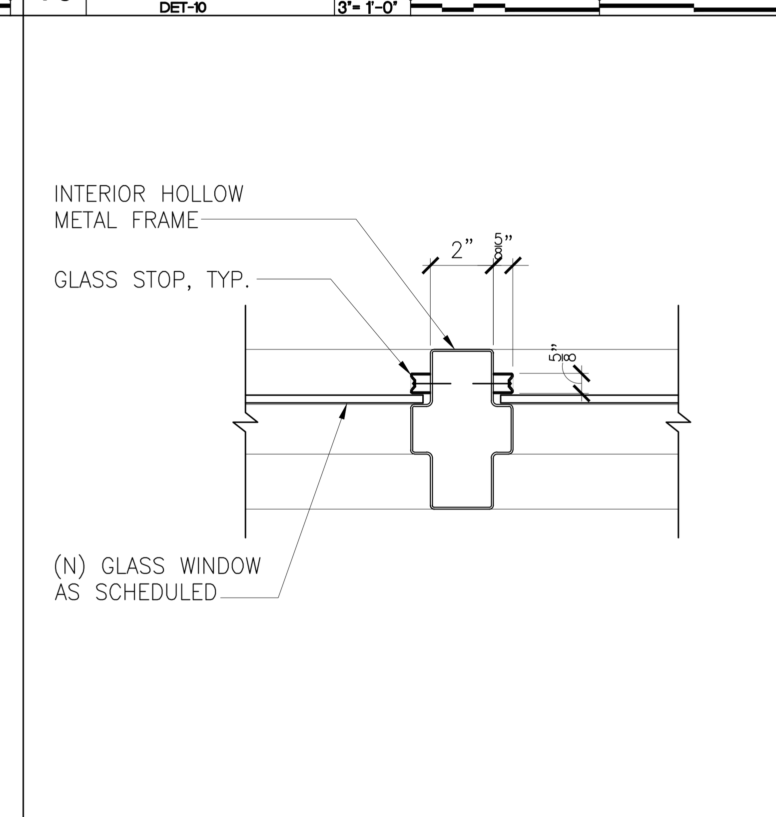

11 Detail: SECTION - GLASS WINDOW MULLION DETAIL
CAD File: DET-11B Scale: 3"= 1'-0"

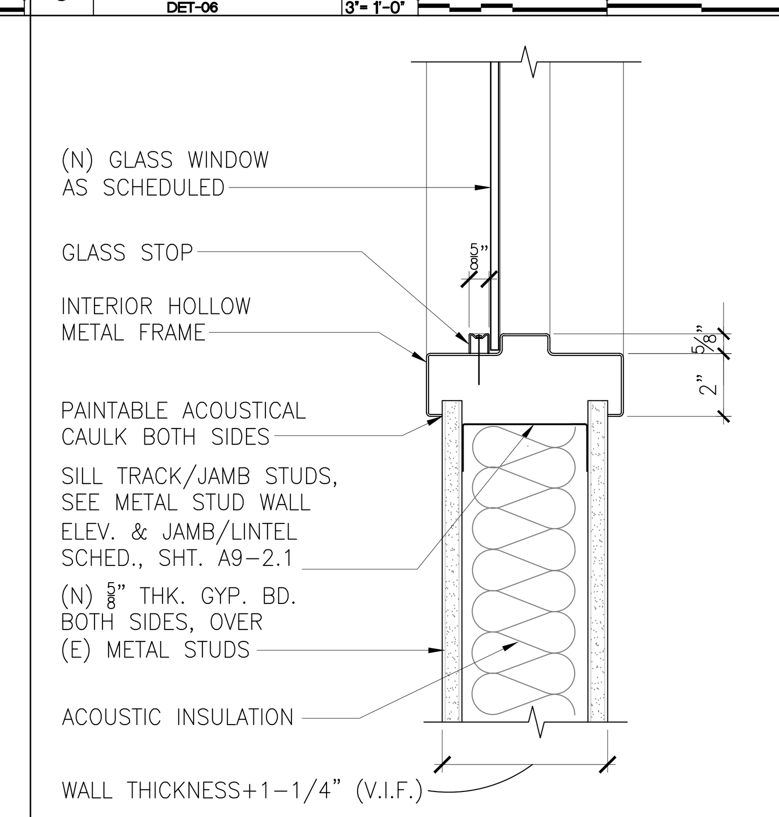

7 Detail: SECTION - GLASS WINDOW SILL/JAMB DETAIL
CAD File: DET-07B Scale: 3"= 1'-0"

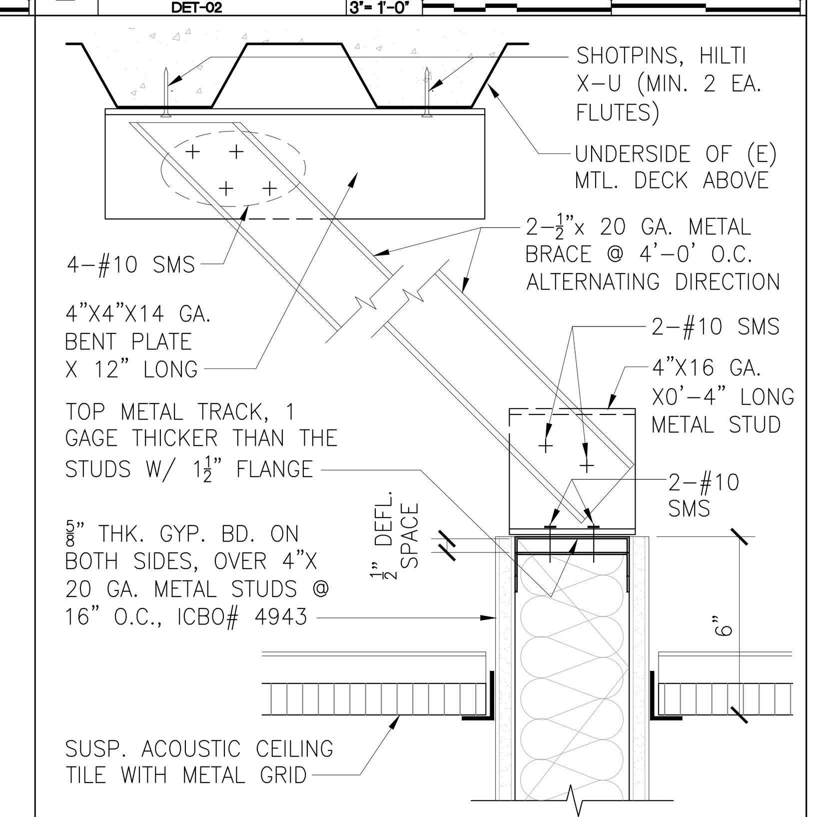

3 Detail: SECTION - 6" ABOVE CEILING PARTITION WALL
CAD File: DET-03 Scale: 3"= 1'-0"

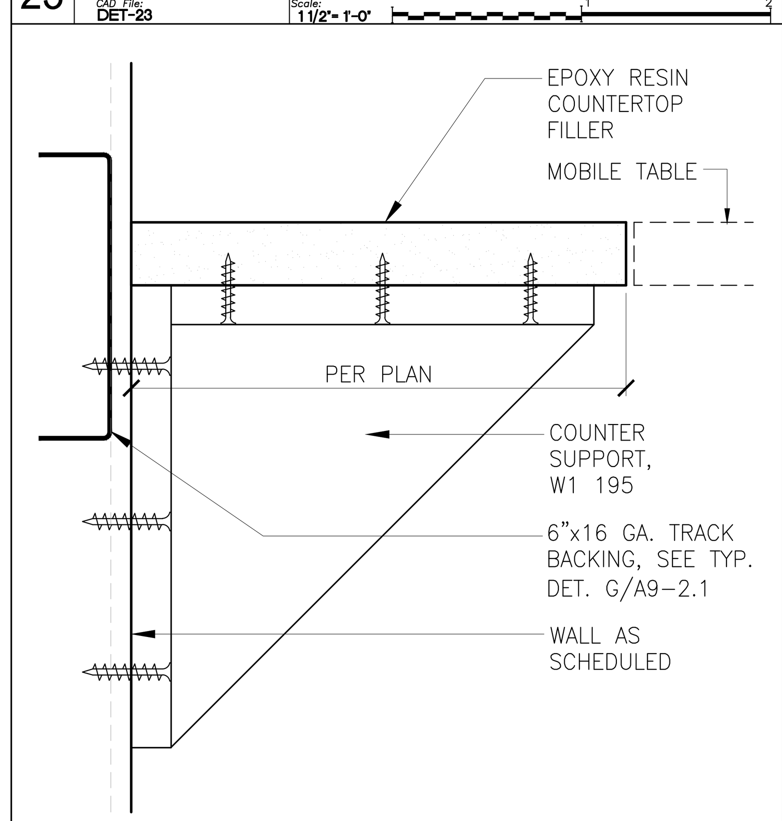

24 Detail: TYP. FIXED COUNTER FILLER DETAIL
CAD File: DET-24 Scale: 6"=1'-0"

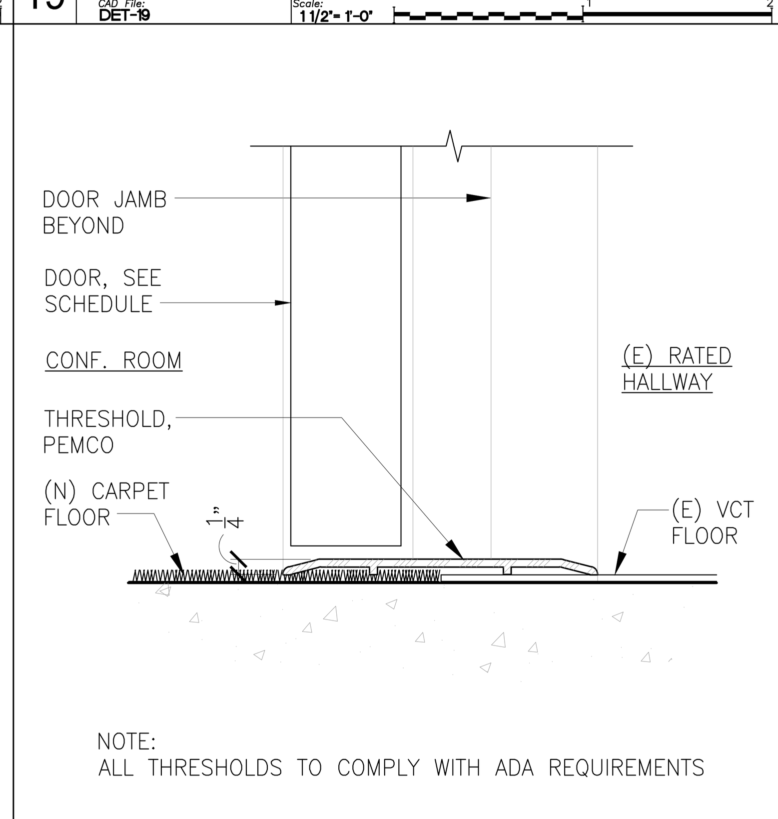

20 Detail: RATED THRESHOLD - CARPET/VINYL TRANSITION
CAD File: DET-12 Scale: 6"=1'-0"

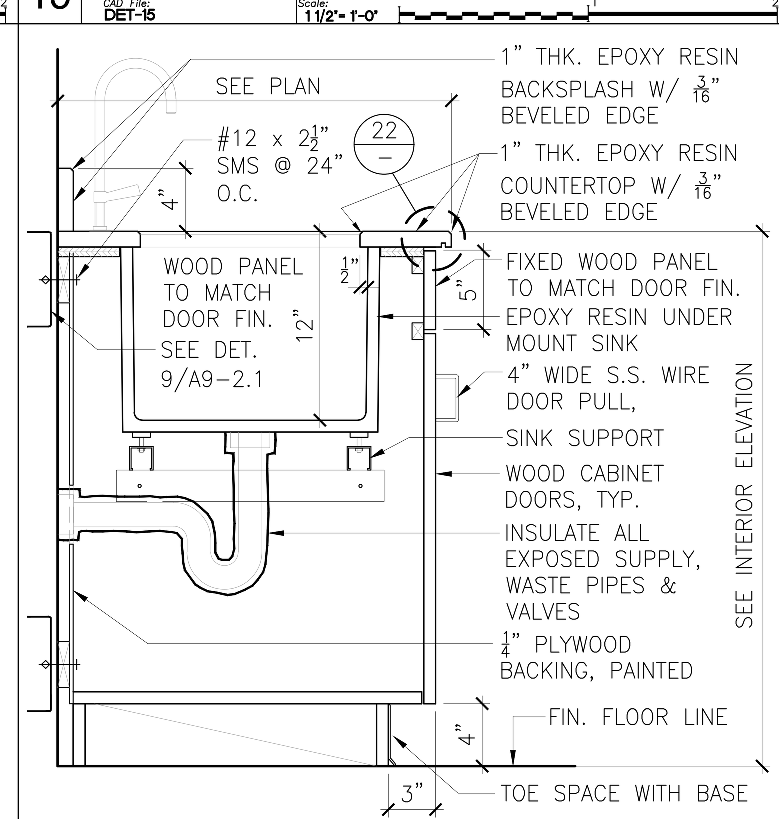

16 Detail: SINK CABINET SECTION
CAD File: DET-16 Scale: 1 1/2"= 1'-0"

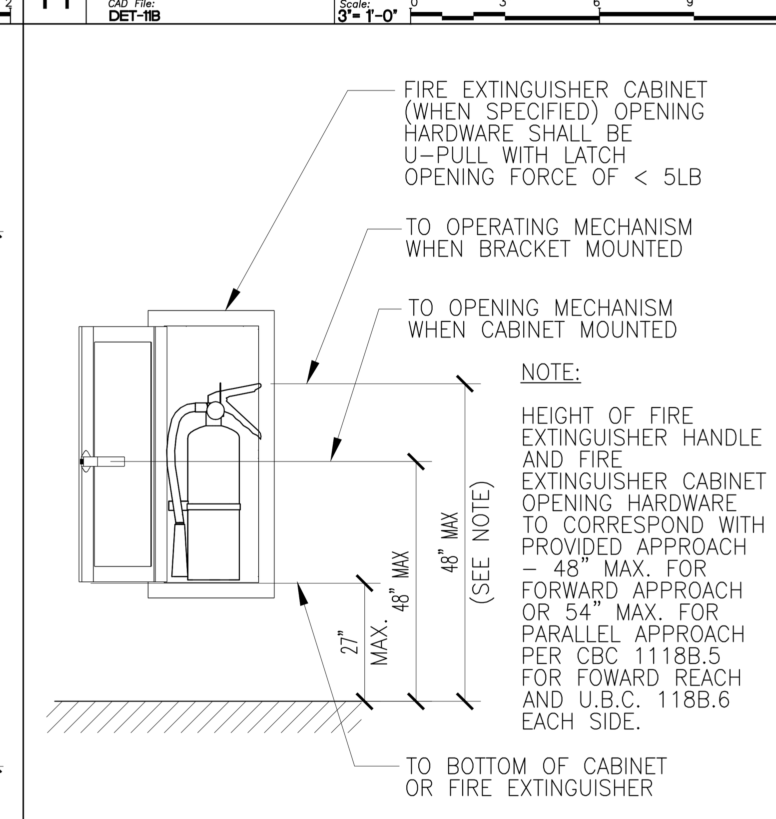

12 Detail: FIRE EXTINGUISHER
CAD File: DET-12 Scale: 3/4"=1'-0"

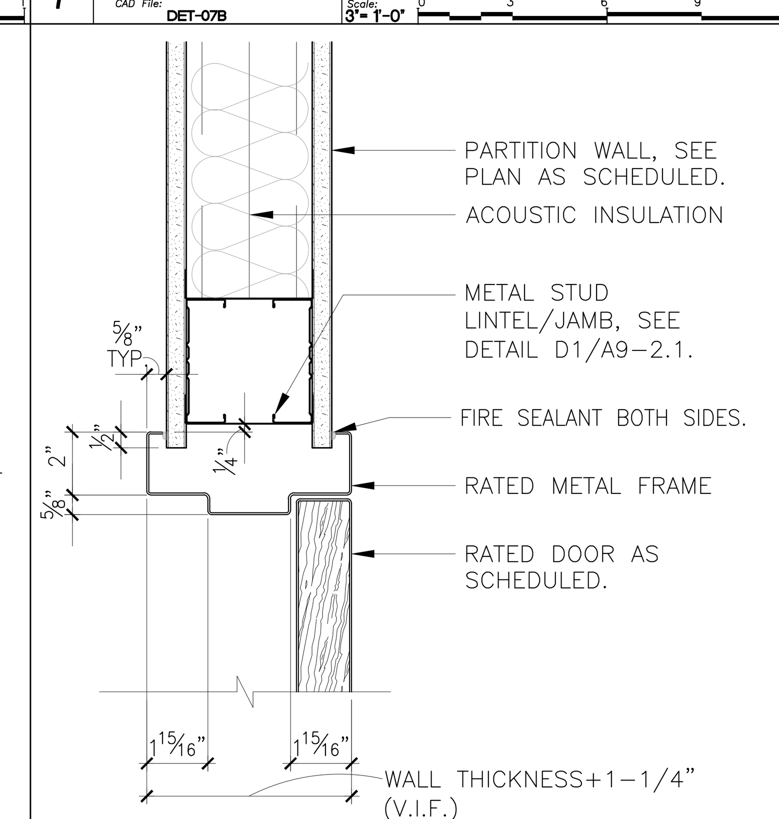

8 Detail: SECTION - RATED DOOR HEAD/JAMB DETAIL
Scale: 3"= 1'-0" CAD File: DR_DETAIL-011C

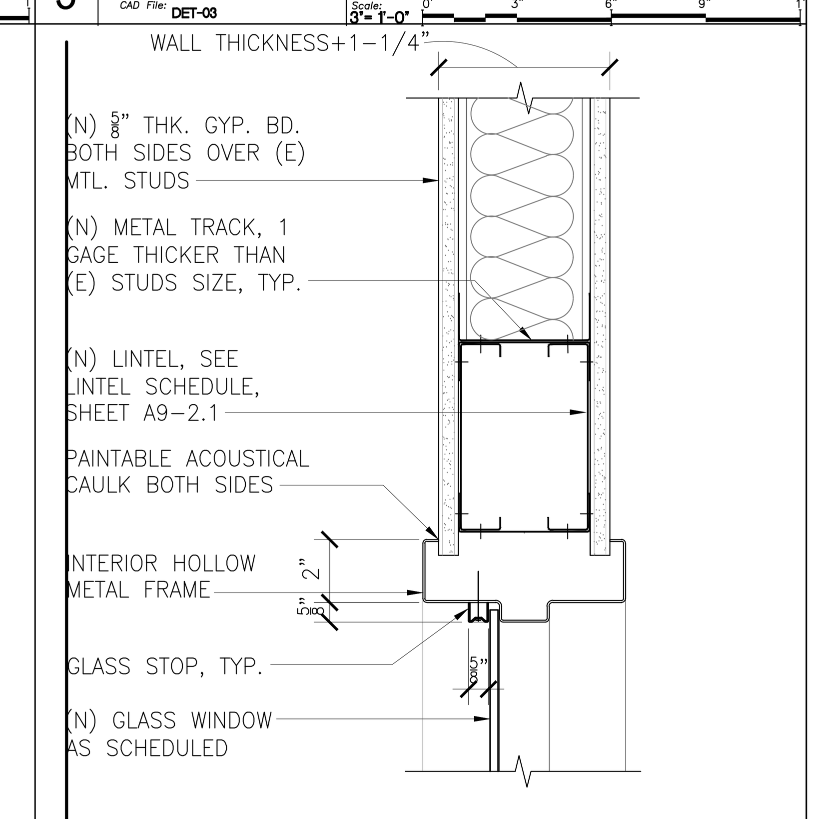

4 Detail: SECTION - GLASS WINDOW HEAD DETAIL
CAD File: DET-04B Scale: 3"= 1'-0"

CITY of TORRANCE
POLICE FACILITY
Torrance, California

Consultants

TETRA -IBI Group
ARCHITECTS & PLANNERS
1055 Wilshire Boulevard, Suite 1885
Los Angeles, CA 90017-5602
PHONE 213 250-7440 FAX 213 481-0947

LICENSED ARCHITECT JERROLD RUSSELL PENROSE NO. C 7568 REN. 10-31-13 STATE OF CALIFORNIA

Drawn by: MM
Checked by: KS
Date: 09/19/11

No.	Revision	Date
A.	ISSUE FOR REVIEW	11-21
B.	ISSUE FOR PLAN CHECK	12-22
C.	PLAN CHECK RESUBMIT	05-15

Project

TORRANCE POLICE DEPT.
New Forensic Science Laboratory

3300 Civic Center Dr., Torrance, CA. 90503

Drawing Title

DETAILS

Project Number: 30257
Scale: AS NOTED
Set
Drawing Number

A9-0.1

METAL SUSPENSION SYSTEMS FOR LAY IN PANEL CEILINGS

1.1 12 GAUGE (MINIMUM.) HANGER WIRES MAY BE USED FOR UP TO AND INCLUDING 4'–0"x4'–0" GRID SPACING AND SHALL BE ATTACHED TO MAIN RUNNERS.

1.2 PROVIDE 12 GAUGE HANGER WIRES AT THE ENDS OF ALL MAIN AND CROSS RUNNERS WITHIN EIGHT INCHES (8") OF THE SUPPORT OR WITHIN ONE–FOURTH (1/4) OF THE LENGTH OF THE END TEE, WHICHEVER IS LEAST, FOR THE PERIMETER OF THE CEILING AREA.

1.3 PROVIDE TRAPEZE OR OTHER SUPPLEMENTARY SUPPORT MEMBERS AT OBSTRUCTIONS TO TYPICAL HANGER SPACING. PROVIDE ADDITIONAL HANGERS, STRUTS OR BRACES AS REQUIRED AT ALL CEILING BREAKS, SOFFITS OR DISCONTINUOUS AREAS. HANGER WIRES THAT ARE MORE THAN 1 IN 6 OUT OF PLUMB ARE TO HAVE COUNTERSLOPING WIRES.

1.4 CEILING GRID MEMBERS MAY BE ATTACHED TO NOT MORE THAN TWO (2) ADJACENT WALLS. CEILING GRID MEMBERS SHALL BE AT LEAST ½" FREE OF OTHER WALLS. IF WALLS RUN DIAGONALLY TO CEILING GRID SYSTEM RUNNERS, ONE END OF MAIN AND CROSS RUNNERS SHOULD BE FREE, AND A MINIMUM OF ½" CLEAR OF WALL.

1.5 AT THE PERIMETER OF THE CEILING AREA WHERE MAIN OR CROSS RUNNERS ARE NOT CONNECTED TO THE ADJACENT WALL, PROVIDE INTERCONNECTION BETWEEN THE RUNNERS AT THE FREE END TO PREVENT LATERAL SPREADING. A METAL STRUT OR A 16 GAUGE WIRE WITH A POSITIVE MECHANICAL CONNECTION TO THE RUNNER MAY BE USED. WHERE THE PERPENDICULAR DISTANCE FROM THE WALL TO THE FIRST PARALLEL RUNNER IS 12" OR LESS, THIS INTERLOCK IS NOT REQUIRED.

1.6 PROVIDE BRACING ASSEMBLIES CONSISTING OF A COMPRESSION STRUT AND FOUR (4) 12 GAUGE SPLAYED BRACING WIRES ORIENTED 90 DEGREES FROM EACH

1.6.1 PLACE BRACING ASSEMBLIES AT A SPACING NOT MORE THAN 12' BY 12' ON CENTER.

1.6.2 PROVIDE BRACING ASSEMBLIES AT LOCATIONS NOT MORE THAN ONE HALF (1/2) THE SPACINGS GIVEN ABOVE, FROM EACH PERIMETER WALL AND AT THE EDGE OF VERTICAL CEILING OFFSETS.

1.6.3 THE SLOPE OF THESE WIRES SHALL NOT EXCEED 45 DEGREES FROM THE PLANE OF THE CEILING AND SHALL BE TAUT. SPLICES IN BRACING WIRES ARE NOT TO BE PERMITTED.

1.6.4 SUSPENDED ACOUSTICAL CEILING SYSTEMS WITH A CEILING AREA OF 144 SQUARE FEET OR LESS, AND FIRE RATED SUSPENDED ACOUSTICAL CEILING SYSTEMS WITH A CEILING AREA OF 96 SQUARE FEET OR LESS, SURROUNDED BY WALLS WHICH CONNECT DIRECTLY TO THE STRUCTURE ABOVE, DO NOT REQUIRE BRACING ASSEMBLIES WHEN ATTACHED TO TWO ADJACENT WALLS.

1.7 FASTEN HANGER WIRES WITH NOT LESS THAN THREE (3) TIGHT TURNS. FASTEN BRACING WIRES WITH FOUR (4) TIGHT TURNS. MAKE ALL TIGHT TURNS WITHIN A DISTANCE OF 1½". HANGER OR BRACING WIRE ANCHORS TO THE STRUCTURE SHOULD BE INSTALLED IN SUCH A MANNER THAT THE DIRECTION OF THE WIRE ALIGNS AS CLOSELY AS POSSIBLE WITH THE DIRECTION OF THE FORCES ACTING ON THE WIRE.

1.7.1 WIRE TURNS MADE BY MACHINE WHERE BOTH STRANDS HAVE BEEN DEFORMED ORBENT IN WRAPPING CAN WAIVE THE 1½" REQUIREMENT, BUT THE NUMBER OF TURNS SHOULD BE MAINTAINED, AND BE AS TIGHT AS POSSIBLE.

1.8 SEPARATE ALL CEILING HANGING AND BRACING WIRES AT LEAST SIX INCHES (6") FROM ALL UNBRACED DUCTS, PIPES, CONDUIT, ETC. IT IS ACCEPTABLE TO ATTACH LIGHTWEIGHT ITEMS, SUCH AS SINGLE ELECTRICAL CONDUIT NOT EXCEEDING ¾" NOMINAL DIAMETER, TO HANGER WIRES USING CONNECTORS ACCEPTABLE TO DSA.

1.9 WHEN DRILLED–IN CONCRETE ANCHORS OR SHOT–IN ANCHORS ARE USED IN REINFORCED CONCRETE FOR HANGER WIRES, 1 OUT OF 10 MUST BE FIELD TESTED FOR 200 LBS. IN TENSION. WHEN DRILLED–IN CONCRETE ANCHORS ARE USED FOR BRACING WIRES, 1 OUT OF 2 MUST BE FIELD TESTED FOR 440 LBS. IN TENSION. SHOT–IN ANCHORS IN CONCRETE ARE NOT PERMITTED FOR BRACING WIRES. IF ANY SHOT–IN OR DRILLED–IN ANCHOR FAILS, SEE CBC, SECTION 1912.

1.9.1 DRILLED–IN OR SHOT–IN ANCHORS REQUIRE SPECIAL DSA APPROVAL WHEN USED IN PRESTRESSED CONCRETE.

1.10 ATTACH ALL LIGHT FIXTURES AND CEILING MOUNTED AIR TERMINALS OR SERVICES, TO THE CEILING GRID RUNNERS TO RESIST A HORIZONTAL FORCE EQUAL TO THE WEIGHT OF THE FIXTURES. SCREWS OR APPROVED FASTENERS ARE REQUIRED.

1.11 FLUSH OR RECESSED LIGHT FIXTURES AND AIR TERMINALS OR SERVICES, WEIGHING LESS THAN 56 POUNDS, MAY BE SUPPORTED DIRECTLY ON THE RUNNERS OF A HEAVY DUTY GRID SYSTEM BUT, IN ADDITION, THEY MUST HAVE A MINIMUM OF TWO 12 GAUGE SLACK SAFETY WIRES ATTACHED TO THE FIXTURE AT DIAGONAL CORNERS AND ANCHORED TO THE STRUCTURE ABOVE. ALL 4' X 4' LIGHT FIXTURES MUST HAVE SLACK SAFETY WIRES AT EACH CORNER. ALL FLUSH OR RECESSED LIGHT FIXTURES AND AIR TERMINALS OR SERVICES WEIGHING 56 POUNDS OR MORE MUST BE INDEPENDENTLY SUPPORTED BY NOT LESS THAN FOUR (4) TAUT 12 GAUGE WIRES EACH ATTACHED TO THE FIXTURE AND TO THE STRUCTURE ABOVE REGARDLESS OF THE TYPE OF CEILING GRID SYSTEM USED. THE FOUR (4) TAUT 12 GAUGE WIRES INCLUDING THEIR ATTACHMENT TO THE STRUCTURE ABOVE MUST BE CAPABLE OF SUPPORTING FOUR (4) TIMES THE WEIGHT OF THE UNIT.

1.12 ALL FIXTURES AND AIR TERMINALS OR SERVICES SUPPORTED ON INTERMEDIATE DUTY GRID SYSTEMS MUST BE INDEPENDENTLY SUPPORTED BY NOT LESS THAN FOUR (4) TAUT 12 GAUGE WIRES EACH ATTACHED TO THE FIXTURE OR TERMINAL, AND TO THE STRUCTURE ABOVE.

1.13 SUPPORT SURFACE MOUNTED LIGHT FIXTURES BY AT LEAST TWO POSITIVE DEVICES WHICH SURROUND THE CEILING RUNNER AND WHICH ARE EACH SUPPORTED FROM THE STRUCTURE ABOVE BY A 12 GAUGE WIRE. SPRING CLIPS OR CLAMPS THAT CONNECT ONLY TO THE RUNNER ARE NOT ACCEPTABLE. PROVIDE ADDITIONAL SUPPORTS WHEN LIGHT FIXTURES ARE 8'–0" OR LONGER.

1.14 SUPPORT PENDANT MOUNTED LIGHT FIXTURES DIRECTLY FROM THE STRUCTURE ABOVE WITH HANGER WIRES OR CABLES PASSING THROUGH EACH PENDANT HANGER AND CAPABLE OF SUPPORTING FOUR (4) TIMES THE WEIGHT OF THE FIXTURE. A BRACING ASSEMBLY PER FIGURE 1, IS REQUIRED WHERE THE PENDANT HANGER PENETRATES THE CEILING. SPECIAL DETAILS ARE REQUIRED TO ATTACH THE PENDANT HANGER TO THE BRACING ASSEMBLY TO TRANSMIT HORIZONTAL FORCES.

1.15 CLASSIFICATION OF CEILING GRID:
CLASSIFICATION OF CEILING GRID: HEAVY DUTY.
MANUFACTURER'S CATALOG NUMBER – MAIN RUNNER: USG DONN DX24.
MANUFACTURER'S CATALOG NUMBER – CROSS RUNNER: USG DONN DXO–216.
MANUFACTURER'S CATALOG NUMBER OF DETAIL FOR RUNNER SPLICE: C4/A921

2.2 FOR SCHOOLS , BRACING ASSEMBLIES ARE REQUIRED FOR EACH 96 SQUARE FEET. THE FIRST BRACING ASSEMBLY IS REQUIRED NOT MORE THAN FOUR FEET FROM EACH WALL. A MINIMUM OF ONE BRACING ASSEMBLY IS REQUIRED BETWEEN ANY TWO ADJACENT EXPANSION CUT–OUTS ON RUNNERS BEING BRACED.

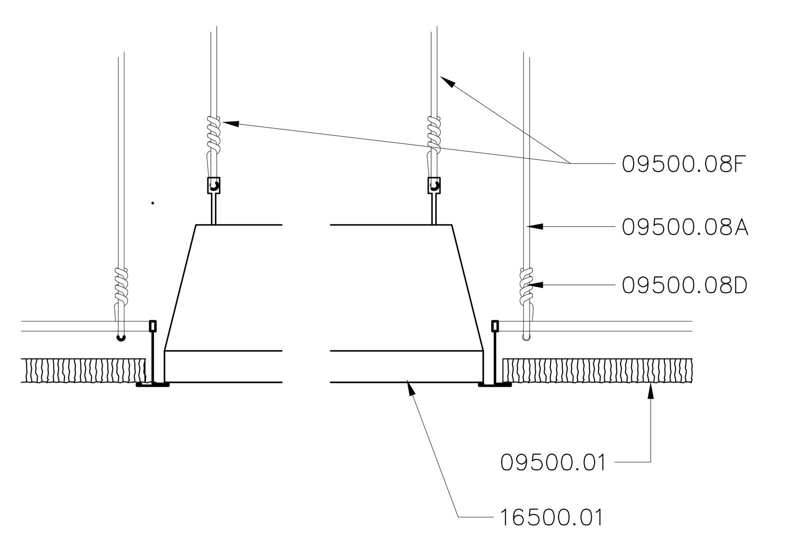

A2 – LAY-IN LIGHT FIXTURE
SCALE: 3"=1'–0"
095113–208 1:4

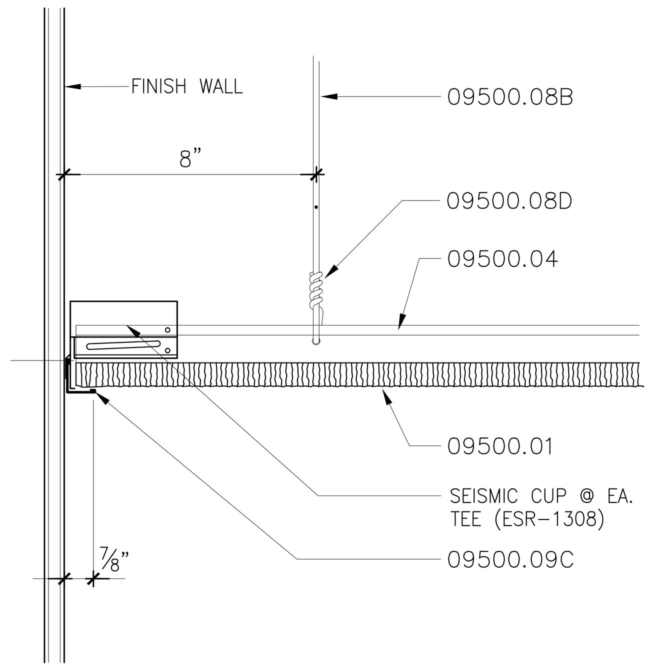

A3 – PERIMETER ANGLE (FREE)
SCALE: 3"=1'–0"
095113–204 1:4

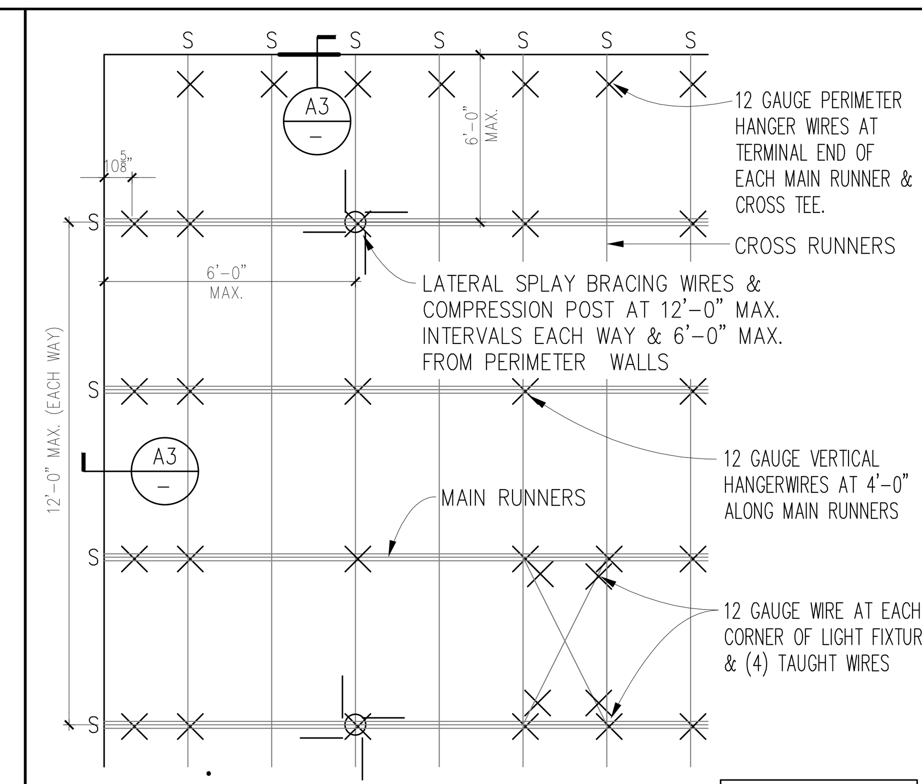

A4 – T-BAR SUSPENSION
SCALE: NONE
FILE NAME 1:1

B2
–

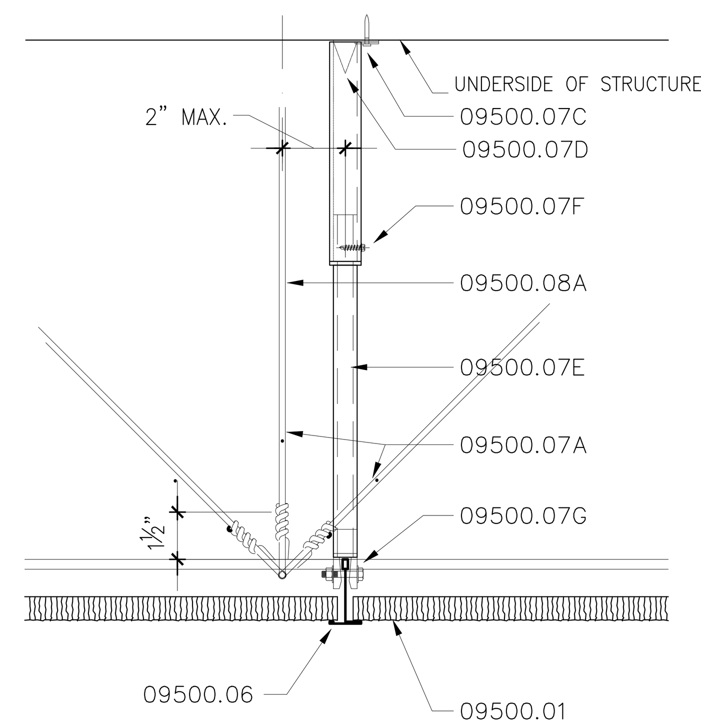

B3 – COMPRESSION POST
SCALE: 3"=1'–0"
095113–207 1:4

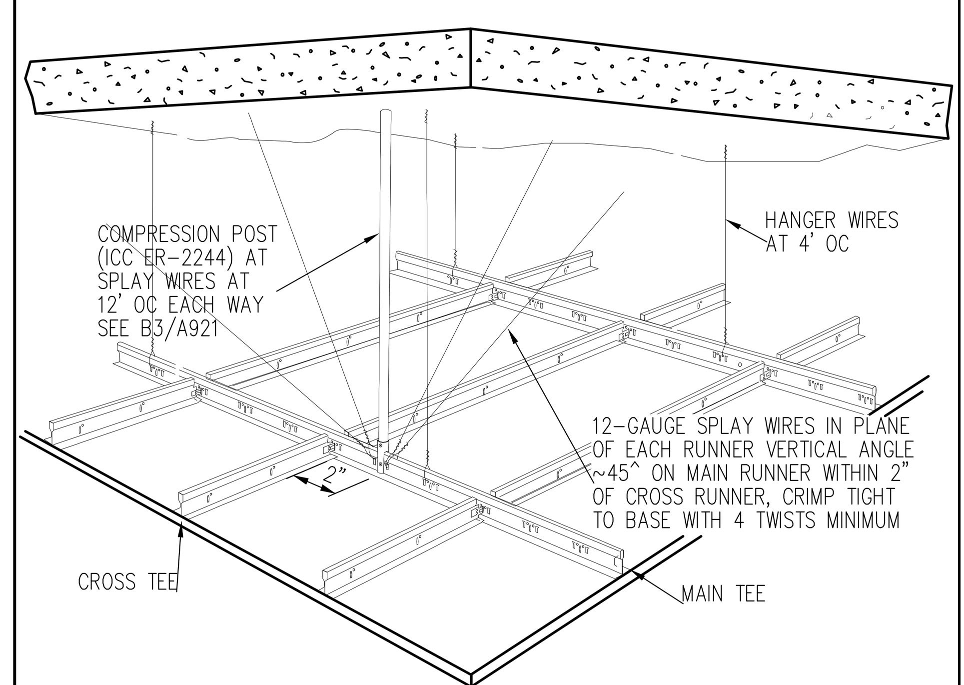

B4 – 4-WAY SPLAY BRACE
SCALE: NONE
FILE NAME 1:1

C2
–

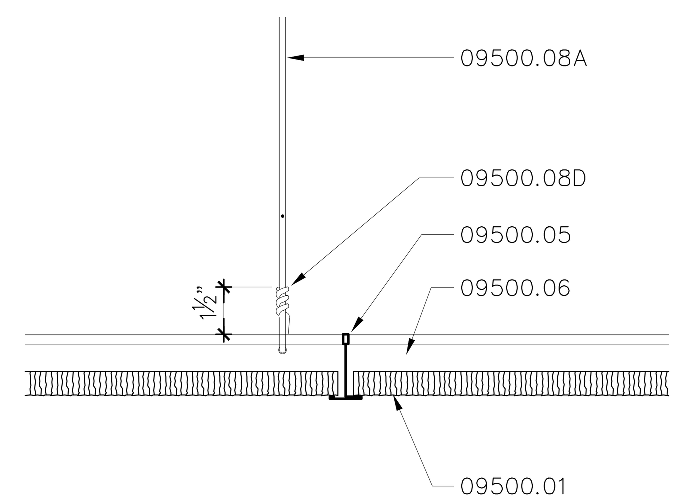

C3 – CEILING HANGER WIRE
SCALE: 3"=1'–0"
095113–206 1:4

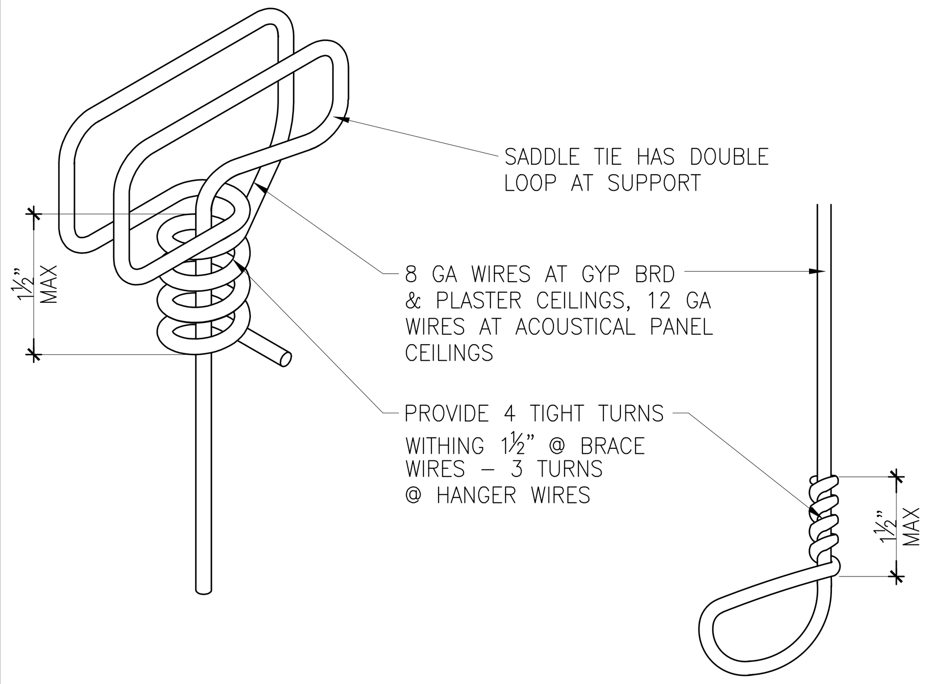

C4 – CEILING WIRE TIES
SCALE: NONE
095113–201 1:4

D2
–

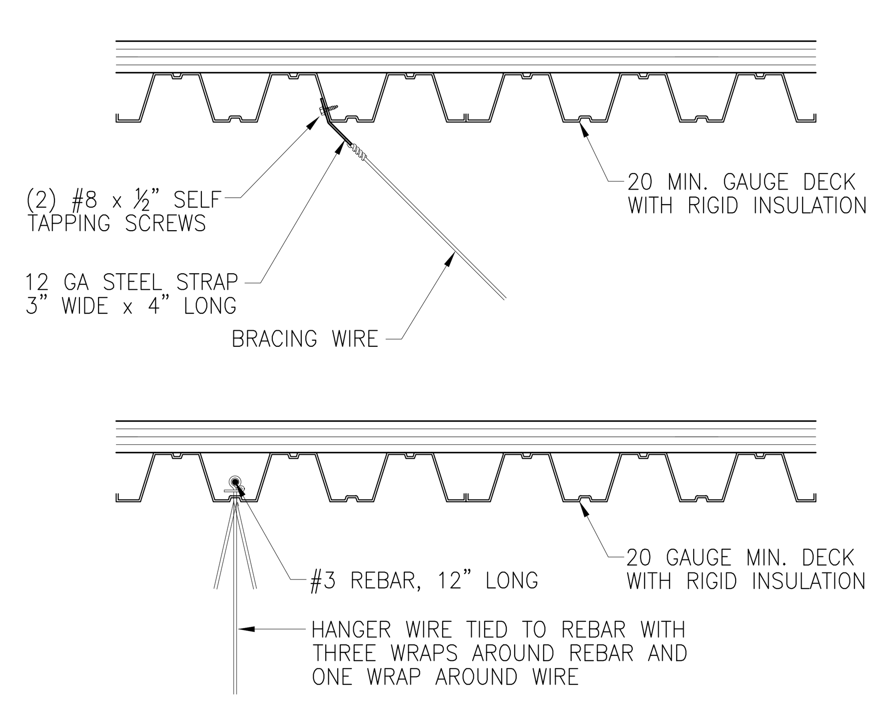

D3 – HANGER/BRACE ATTACHMENT
SCALE: NONE
09260–207A 1:8

09260–207A
(1:0)

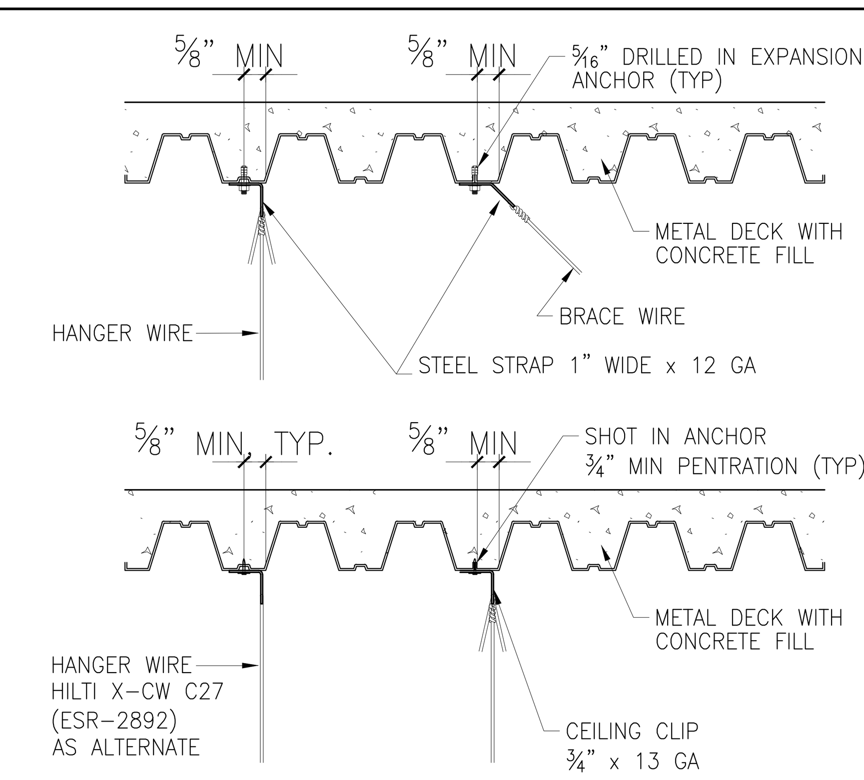

D4 – HANGER BRACE ATTACHMENT
SCALE: NONE
09260–207 1:8

09260–207A
(1:0)

DIVISION 9 – FINISHES

SECTION 09500 – ACOUSTICAL CEILING SYSTEMS

09500.01	LAY–IN ACOUSTICAL CEILING SYSTEM W/ METAL SUSPENSION SYSTEM (A4/A921 & B4/A921) REFER TO FINISH SCHEDULE SHEETS A721 & A722 FOR SPECIFIC LOCATIONS
09500.01A	ACOUSTICAL CEILING PANELS
09500.04	MAIN OR CROSS RUNNER
09500.05	CROSS RUNNER
09500.06	CONT MAIN RUNNER SPLICE ALL JOINTS
09500.07A	12 GA SPLAY WIRES IN PLANE OF EACH RUNNER, VERT ANGLE 45 DEG ON MAIN RUNNER WITHIN 2" OF CROSS RUNNER, CRIMP TIGHT SEE C4/A921
09500.07C	SHOT–IN ANCHOR 3/4" MIN PENETRATION OR #8 SELF–TAPPING SCREW
09500.07D	SPRING STEEL CLIP
09500.07E	TELESCOPING COMPRESSION POST (ICC ER–2244)
09500.07F	#10x1" SELF–TAPPING SMS
09500.07G	BLUB CLIP FASTEN TO MAIN RUNNER W/ #10 BOLT & HEX NUT
09500.07H	12 GA SPLAY WIRES IN PLANE OF EACH RUNNER, VERT ANGLE 45 DEG ON MAIN RUNNER TO I.D.S. CLIP, CRIMP TIGHT SEE C4/A921
09500.07J	COMPRESSION POST (ICC ER–2244) WITHIN 2" OF I.D.S. CLIP SEE B4 & C2/A921
09500.08A	12 GA HANGER WIRES AT 4–FT OC ALONG MAIN RUNNER
09500.08B	12 GA PERIMETER HANGER WIRES AT TERMINAL END OF EACH MAIN RUNNER & CROSS TEE WITHING 8" OF WALL
09500.08D	CRIMP TIGHT SEE C4/A921
09500.08F	FLUSH OR RECESSED LIGHT FIXTURES, WEIGHING LESS THAN 56 LBS. AND MECHANICAL TERMINALS AND SERVICES, WEIGHING LESS THAN 20 LBS., SHALL SUPPORTED DIRECTLY ON THE RUNNERS OF A HEAVY DUTY GRID SYSTEM BUT, IN ADDITION, THEY SHALL HAVE A MINIMUM OF TWO (2) #12 GAGE SLACK SAFETY WIRES ATTACHED TO THE FIXTURE AT DIAGONAL CORNERS AND ANCHORED TO THE STRUCTURE ABOVE. FLUSH OR RECESSED LIGHT FIXTURES WEIGHING 56 LBS. OR MORE AND MECHANICAL TERMINALS AND SERVICES, WEIGHING 20 LBS. OR MORE, MUST BE INDEPENDENT SUPPORTED BY NOT LESS THAN FOUR (4) TAUT #12 GAGE WIRES, EACH ATTACHED TO THE FIXTURE AND TO THE STRUCTURE ABOVE. THE FOUR (4) TAUT #12 GAGE WIRES, INCLUDING THEIR ATTACHMENT TO THE STRUCTURE ABOVE, MUST BE CAPABLE OF SUPPORTING FOUR (4) TIMES THE WEIGHT OF THE UNIT.
09500.08G	12 GA HANGER WIRE TO STRUCTURE ABOVE (D3 OR D4/A921)
09500.09A	STANDARD LEG PERIMETER ANGLE WITH #10 SMS INTO EACH STUD & SEISMIC CUP @ EA. TEE.
09500.16	1/2" DIA EMT (PAINTED FLAT BLACK) WITH END FLATTENED AT EACH RUNNER WITH SPLAY BRACE
09500.17	#10 SELF–TAPPING SMS INTO BACKING (D2G/A911)
09500.18	#10 BOLT & HEX NUT W/ LOCK WASHER

DIVISION 16 – ELECTRICAL

SECTION 16500, LIGHTING

16500.01	FLUORESCENT DIRECT/INDIRECT FIXTURE, CABLE SUSPENDED SEE ELECTRICAL LIGHTING PLANS (E_320 SERIES)
16500.50A	I.D.S. CLIP
16500.50B	LIGHT FIXTURE CANOPY
16500.50C	1/16" AIRCRAFT CABLE W/ THREADED RING COUPLER TO I.D.S. CLIP

CITY of TORRANCE
POLICE FACILITY
Torrance, California

Consultants

TETRA -IBI Group
ARCHITECTS & PLANNERS
1055 Wilshire Boulevard, Suite 1885
Los Angeles, CA 90017-5602
PHONE 213 250-7440 FAX 213 481-0947

LICENSED ARCHITECT
JERROLD RUSSELL PENROSE
NO. C 7568
REN. 10–31–13
STATE OF CALIFORNIA

Drawn by: MM
Checked by: KS
Date: 09/19/11

No.	Revision	Date
	A. ISSUE FOR REVIEW	11–21
	B. ISSUE FOR PLAN CHECK	12–22
	C. PLAN CHECK RESUBMIT	05–15

Project

TORRANCE POLICE DEPT.
New Forensic Science Laboratory

3300 Civic Center Dr.,
Torrance, CA. 90503

Drawing Title

ACOUSTIC CEILING DETAILS

Project Number: 30257
Scale: AS NOTED
Set
Drawing Number

A9-1.1

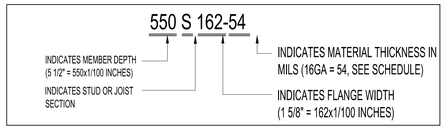

MILS	GAGE
54	16GA.
43	18GA.
33	20GA.

PROVIDE STEEL STUDS FROM MEMBERS OF STEEL STUD MANUFACTURER'S ASSOCIATION (SSMA) PER ICC ESR-4-943P

A1 METAL STUD IDENTIFICATION

SCALE: NONE

FILE NAME 1:1

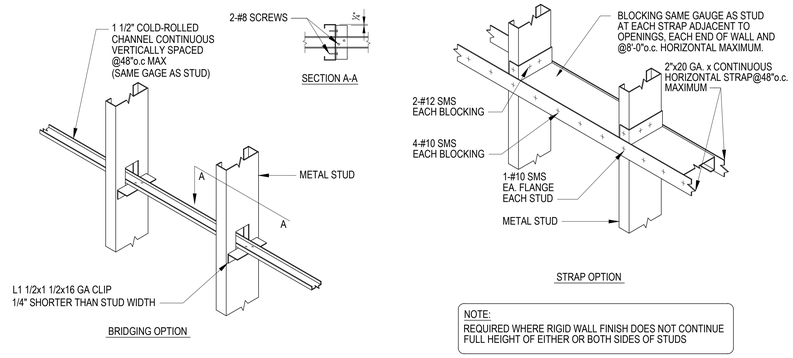

A2 TYPICAL LATERAL BRIDGING AT METAL STUDS

SCALE: NONE

FILE NAME 1:1

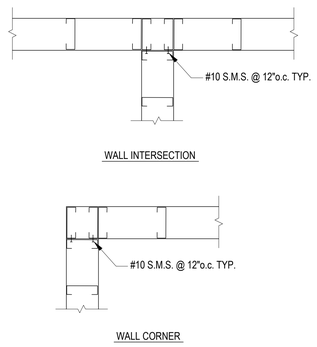

A3 TYP METL STUD INTERSECTIONS

SCALE: NONE

FILE NAME 1:1

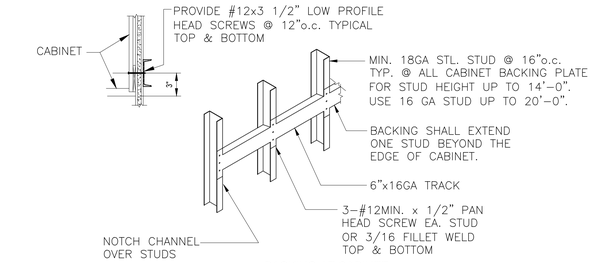

BACKING AT CABINET

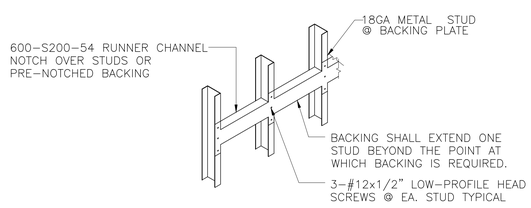

EQUIPMENT WEIGHT UNDER 100 LB. (AND FIXTURES)

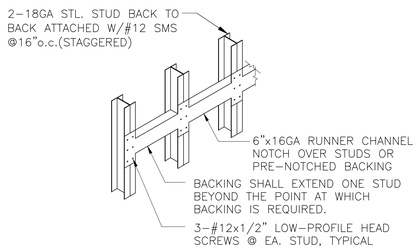

EQPM. WEIGHT BETWEEN 100-200 LBS. (AND FIXTURES)

BACKING FOR WALL SUPPORTED ITEMS (G)

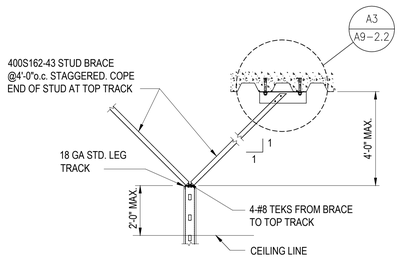

TOP CONNECTION (F)

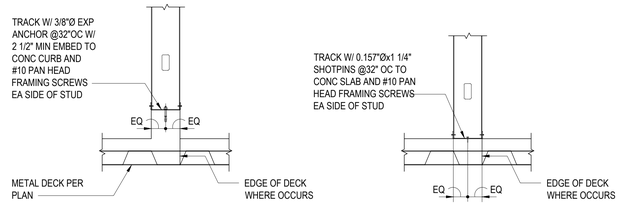

STUD WALL ON CONCRETE CURB DETAIL

STUD WALL ON CONCRETE DETAIL

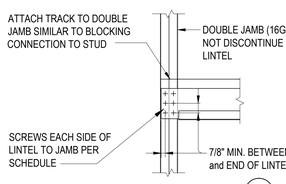

CONNECTION TO JAMB (E)

LINTEL / JAMB SCHEDULE			
MAX. LENGTH	LINTEL BEAM SIZE	# OF STUDS AT JAMB	#10 SCREWS EACH SIDE OF BEAM TO JAMB
4'-0"	(2) 400 S162-33	1	2 SCREWS (4 TOTAL)
6'-0"	(2) 400 S162-33	2	2 SCREWS (4 TOTAL)
8'-0"	(2) 600 S162-33	2	3 SCREWS (6 TOTAL)
10'-0"	(2) 600 S162-33	2	3 SCREWS (6 TOTAL)
12'-0"	(2) 800 S162-33	3	4 SCREWS (8 TOTAL)
14'-0" *	(2) 800 S162-33	3	4 SCREWS (8 TOTAL)
16'-0"	(2) 1000 S162-33	3	5 SCREWS (10 TOTAL)
* 13'-0" MAX. HEADER WIDTH FOR 4" STUDS			

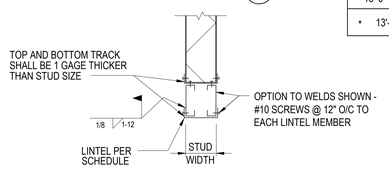

LINTEL SECTION (D)

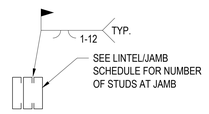

JAMB SECTION (C)

JAMB/LINTEL DETAILS AND SCHEDULE

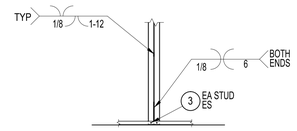

BOX STUD TO BOTTOM TRACK

NOTES:
1. FOR STEEL STUD AND TRACK TYPE, SEE PLANS, SECTIONS AND METAL STUD SIZE SCHEDULE.
2. FOR METAL STUD FASTENERS, SEE METAL STUD FASTENER SCHEDULE.

STUD TO SLAB OR CURB DETAIL (A)

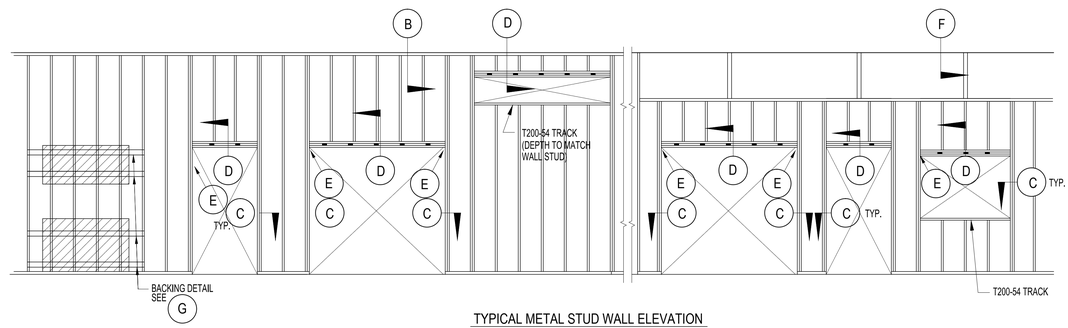

TYPICAL METAL STUD WALL ELEVATION

METAL STUD FASTENER SCHEDULE	
MARK	FASTENERS SIZE AND SPACING
1	HILTI X-U POWER DRIVEN FASTERNER @ 24"o.c. W/ 1 1/2" MIN. EMBED.
2	HILTI X-U POWER DRIVEN FASTERNER W/ 1 1/4" MIN. EMBED.
3	#10 SHEET METAL SCREW
4	#12 SHEET METAL SCREW
5	1/2" ∅ A307 HEADED BOLT @ 24"o.c. (MIN. 5" EMBED)

MAXIMUM ALLOWABLE HEIGHT ("H") SCHEDULE				
METAL STUD (S-STUD) SIZE (MIN 1 5/8" FLANGE)				
GAUGE	4"	6"	8"	
14	-	-	36'-0"	
16	19'-8"	26'-10"	33'-4"	
18	18'-4"	24'-10"	29'-4"	
20	16'-8"	20'-11"	-	

NOTES:
1. MAXIMUM STUD HEIGHT "H" FOR STUDS @ 16" O.C.
2. SEE ARCHITECTURAL FOR OTHER CONDITIONS.
3. SEE ARCHITECTURAL FOR LOCATION OF CURB.
4. HILTI X-U LOW VELOCITY POWER DRIVEN FASTERNER SHALL BE PER ICC REPORT No. ESR 2269
5. ALL TRACKS SHALL BE 1 GAGE THICKER THAN STUDS WITH 1-1/2" FLANGE

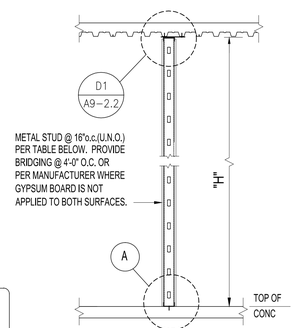

TYPICAL METAL STUD WALL SECTION

D1 TYPICAL INTERIOR NON-BEARING METAL STUD WALL CONSTRUCTION DETAIL

SCALE: NONE

FILE NAME 1:1

CITY of TORRANCE
POLICE FACILITY
Torrance, California

Consultants

TETRA -IBI Group
ARCHITECTS & PLANNERS
2035 Wilshire Boulevard, Suite 1185
Los Angeles, CA 90057-3600
PHONE 213 250-7440 FAX 213 481-9947

LICENSED ARCHITECT
GEORGE RUSSELL SCHEEL
NO. C 7568
RENEW: 8-31-13
STATE OF CALIFORNIA

Drawn by MM

Checked by KS

Date 09/19/11

No.	Revision	Date
A.	ISSUE FOR REVIEW	11-21
B.	ISSUE FOR PLAN CHECK	12-22
C.	PLAN CHECK RESUBMIT	05-15

Project

TORRANCE POLICE DEPT.
New Forensic Science Laboratory

3300 Civic Center Dr., Torrance, CA. 90503

Drawing Title

STUD FRAMING DETAILS

Project Number 30257

Scale AS NOTED

Set

Drawing Number

A9-2.1

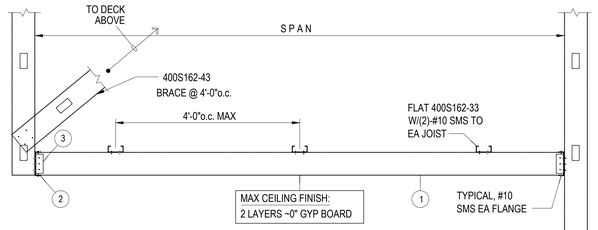

MAX SPAN	① JOIST @ 16"OC	② LEDGER TRACK	③ CLIP ANGLE
6'-0"	400S162-33	400T150-33 W/(2)-#10 TO EA STUD	18GAx2"x2"x3" LONG W/(2)-#10 EA LEG
12'-0"	600S162-33	600T150-43 W/(3)-#10 TO EA STUD	18GAx2"x2"x5" LONG W/(3)-#10 EA LEG

A1 — TYP WALL SUPPORTED MTL STUD CEILING OR SOFFIT
SCALE: NONE

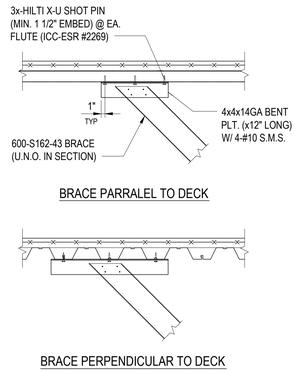

A2 — TYP MTL STUD BRACE TO DECK
SCALE: NONE

DIVISION 3 – CONCRETE
SECTION 03300 – CAST-IN-PLACE CONCRETE
03300.09 CONCRETE FILL, SEE STRUCTURAL PLANS (SERIES S_300)
DIVISION 5 – METALS
SECTION 05120 – STRUCTURAL STEEL
05120.01 STRUCTURAL STEEL BEAM, SEE STRUCTURAL FRAMING PLANS (SERIES S_300 & S_310)
SECTION 05300 – METAL DECKING
05300.01 GALVANIZED STEEL DECKING, SEE STRUCTURAL PLANS (SERIES S_300)
DIVISION 9 – FINISHES
SECTION 09100, METAL SUPPORT ASSEMBLIES
09100.01 NON-LOAD BEARING METAL STUDS, REFER TO WALL TYPES FOR GAUGE AND SPACING
09100.29 CLIP ANGLE SAME GAGE AS STUDS W/ (2) #8 FRAMING SCREWS EA LEG
09100.42 #8 PAN HEAD FRAMING SCREWS (TYP)
09100.42A (4) #8 PAN HEAD FRAMING SCREWS
09100.70C 0.145"x1" POWER ACTUATED FASTENER @ 16" O.C. (MAX.) REFERENCE FASTENER MANUFACTURERS ICBO FOR CAPACITY
09100.80 SLOTTED TRACK ASSEMBLY
09100.81 2" x 20 GA STEEL STRAPS OR Z-BARS @ 16" O.C. (MAX.)
09100.82 1/2" TO 2" x 20 GA. Z-BARS @ 16" O.C. (MAX.)
09100.82A 1/2" TO 2" x 20 GA. Z-BARS @ 12" O.C. (MAX.)
09100.83 KICKBACK STUD SAME GAUGE AS WALL STUD
09100.84 25 GA HAT CHANNEL 16" O.C. TO SUPPORT DRYWALL SPANS OVER 16"
09100.85 3.4 EXPANDED METAL LATH ATTACHED TO OUTRIGGER (AT RATED WALLL ONLY)
09100.87 UN-PUNCHED BLOCKING SAME GAUGE AS STUDS

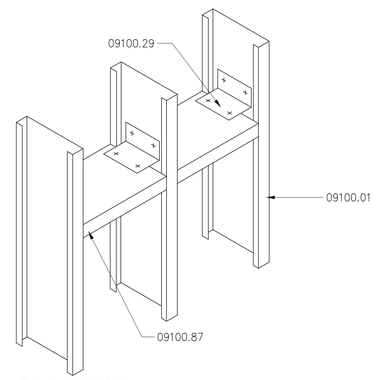

B1 — BLOCKING
SCALE: 1½"=1'-0"

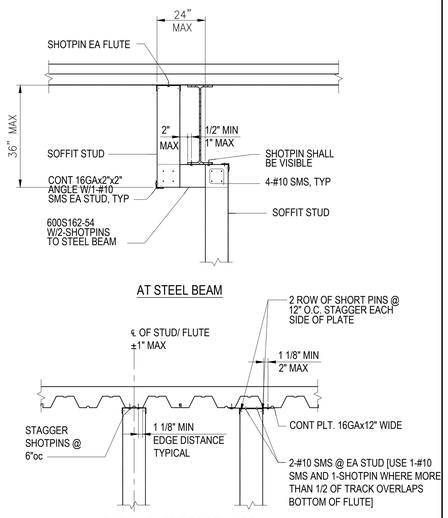

NOTE:
1. SHOTPINS SHALL BE HILTI X-U INSTALLED PER ICC ESR-2269 WITH MIN 20GA x 3/4 "Ø WASHER; UNO.
2. SHOTPIN LENGTH IN CONCRETE ON METAL DECK = 1 1/2"

C1 — TYP SOFFIT CONNECTION TO DECK
SCALE: NONE

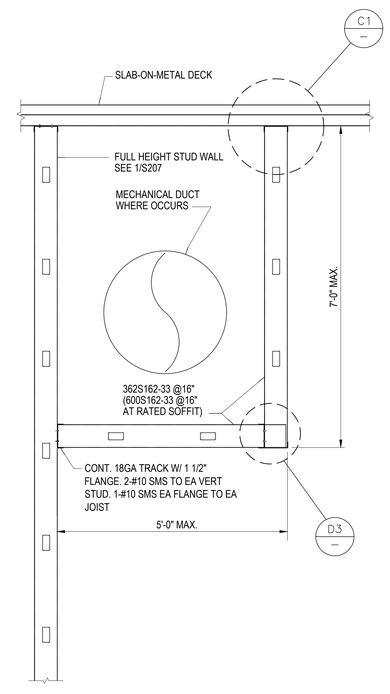

C2 — TYP MTL STUD SOFFIT FRAMING
SCALE: NONE

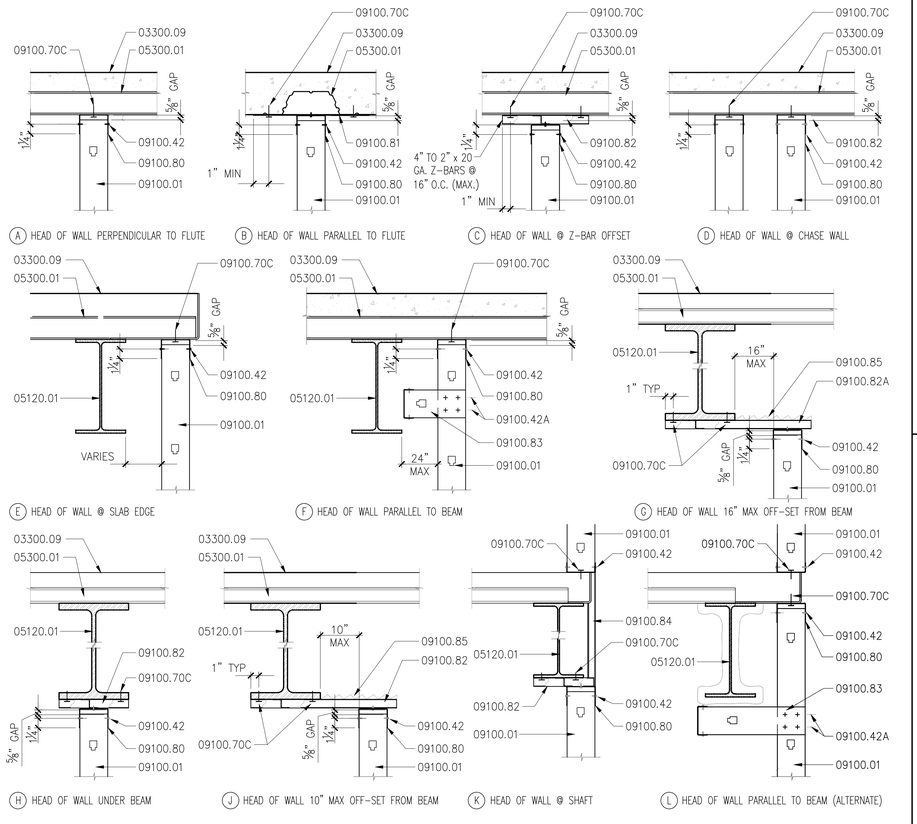

D1 — TYPICAL STUD WALL HEAD CONNECTIONS
SCALE: 1½"=1'-0"

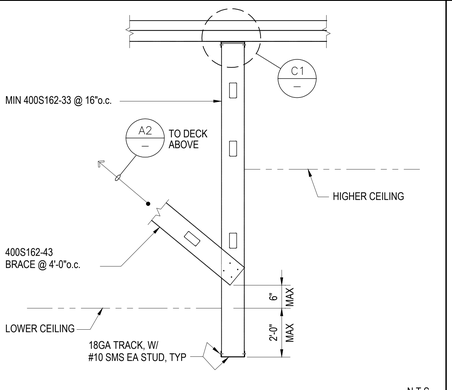

D2 — TYP MTL STUD TRANSITION
SCALE: NONE
N.T.S.

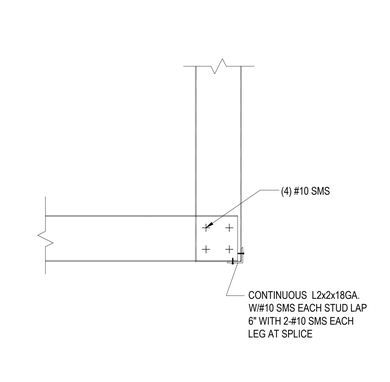

D3 — TYP MTL STUD SOFFIT EDGE
SCALE: NONE

CITY of TORRANCE
POLICE FACILITY
Torrance, California

Consultants

TETRA -IBI Group
ARCHITECTS & PLANNERS
2035 Wilshire Boulevard, Suite 1185
Los Angeles, CA 90057-3600
PHONE 213 250-7440 FAX 213 481-9947

LICENSED ARCHITECT
GEORGE RUSSELL STORRS
NO. C 7568
RENEWAL 08-31-13
STATE OF CALIFORNIA

Drawn by: MM
Checked by: KS
Date: 09/19/11

No.	Revision	Date
A.	ISSUE FOR REVIEW	11-21
B.	ISSUE FOR PLAN CHECK	12-22
C.	PLAN CHECK RESUBMIT	05-15

Project

TORRANCE POLICE DEPT.
New Forensic Science Laboratory

3300 Civic Center Dr., Torrance, CA. 90503

Drawing Title

STUD FRAMING DETAILS

Project Number: 30257
Scale: AS NOTED
Set:

Drawing Number

A9-2.2