PROPOSAL, SPECIFICATIONS, BOND
AND AFFIDAVIT
FOR THE CONSTRUCTION OF

FARMERS' MARKET BOLLARD INSTALLATION, FEAP 910

B2015-16

Craig Bilezerian
City Engineer

June 2015

TABLE OF CONTENTS

SECTION A - NOTICE INVITING BIDS

NOTICE INVITING BIDS A-1

SECTION B - INSTRUCTIONS TO BIDDERS

INSTRUCTIONS TO BIDDERS B-1

SECTION C - BID DOCUMENTS

BIDDER'S SUBMITTAL C-1

ACKNOWLEDGMENT OF ADDENDA RECEIVED C-4

CONTRACTOR'S AFFIDAVIT C-5

LIST OF SUBCONTRACTORS C-7

REFERENCES C-8

VIOLATIONS OF FEDERAL, STATE OR LOCAL LAWS C-10

BID BOND C-11

SECTION D - DOCUMENTS TO BE COMPLETED AND DELIVERED TO CITY AFTER AWARD OF CONTRACT BY THE CITY COUNCIL

PERFORMANCE BOND D-2

LABOR AND MATERIAL BOND D-4

PUBLIC WORKS AGREEMENT D-7

CONSTRUCTION OR SERVICE CONTRACT ENDORSEMENT D-8

WORKERS' COMPENSATION INSURANCE CERTIFICATION D-10

SECTION E - SPECIAL PROVISIONS

APPENDIX I: PRO FORMA PUBLIC WORKS AGREEMENT

APPENDIX II: CITY OF TORRANCE PUBLIC WORKS AGREEMENT, PERMIT AND BUSINESS LICENSE

APPENDIX III: CONSTRUCTION & DEMOLITION WASTE MANAGEMENT PLAN (WMP)

APPENDIX IV: MANUFACTURER'S DRAWINGS

SECTION A

NOTICE INVITING BIDS

CITY OF TORRANCE, CALIFORNIA

NOTICE INVITING BIDS

Notice is hereby given that sealed bids for performing the following described work will be received at the Office of the City Clerk of the City of Torrance, California, **until 3:00 p.m. on Wednesday, June 24, 2015,** after which time they will be publicly opened and read at 3:15 p.m. in the Council Chambers of said City:

CONSTRUCTION OF
FARMERS' MARKET BOLLARD INSTALLATION
B2015-16

Plans and Specifications are available on the City's website at http://www.torranceca.gov/28796.htm .

Those who only view and/or print the Plans and Specifications from the City's website will not automatically be added to the City's Plan Holder list for this project.

The official Bidder's Submittal packet must be obtained from the Office of the City Clerk, City Hall, 3031 Torrance Boulevard, Torrance, California. Contact the City Clerk's office at (310) 781-7530 or CityClerk@TorranceCA.gov for more information. There is no cost if the Bidder's Submittal is obtained at City Hall. A payment of $5 is required if requested by mail. The amount includes tax and is not refundable. A prospective bidder must provide to the City Clerk the firm's name, address, telephone and fax numbers, a contact person and a valid email address. This will ensure that your firm is listed as a "Plan Holder" and that you will be informed of any and all information issued subsequent to obtaining the official form of Proposal. Addenda will be issued only by email and only to those that provide the required information to the City Clerk. Receipt of any Addendum must be acknowledged by a bidder in its submitted form of Proposal. **If a bidder submits its Bidder's Submittal on forms other than the official Bidder's Submittal forms, the City may declare the bid as non-responsive**.

Full-size 24"x36" Plans and a bound Specifications booklet may also be obtained at the same Office of the City Clerk, upon payment of $5 if obtained at City Hall, or payment of $15 if requested by mail. Both amounts include tax. Neither amount is refundable. The $5 includes a copy of the official Bidder's Submittal packet. If requesting any item(s) by mail, please send check to the following:

CITY OF TORRANCE
OFFICE OF THE CITY CLERK
3031 TORRANCE BLVD
TORRANCE, CA 90509
ATTN: B2015-16

The Engineer's estimate of the contract total is approximately $190,000. All work shall be completed within 45 working days from the date of the Notice to Proceed (NTP).

An Administrative Notice to Proceed to order materials may be issued to allow for ordering materials that require time for fabrication. No mobilization or work will be allowed until schedule and material delivery date is provided at which time the 45 working day NTP will be provided.

Per Division 2, Chapter 2 of the Torrance Municipal Code, the Torrance City Council may reject any and all bids, waive any informality or irregularity in such bids, and determine the lowest responsible bidder. No facsimile bids shall be accepted by the City.

Substitution of securities for withheld funds is permitted per Section 22300 of the Public Contract Code.

The City has determined that a Class **A** Contractor's license is necessary to bid this project, but reserves the right to accept another Class at the sole discretion of either the Public Works Director or Engineer.

Pursuant to Section 1770 et seq. of the California Labor Code, the minimum prevailing rate of per diem wages for each craft, classification, or type of workman needed to execute the Contract shall be those determined by the Director of Industrial Relations of the State of California ("DIR"). These wages are set forth in the General Prevailing Wage Rates for this project, available from the California Department of Industrial Relations' Internet web site at http://www.dir.ca.gov/DLSR/PWD.

This contract is subject to compliance monitoring and enforcement by the DIR. If this project has a bid opening date of March 1, 2015 or later, any contractor and any subcontractor must register in order to submit a bid and be awarded a contract. Also refer to Special Provisions Section 7-2.6 of this document. (SB854)

By order of the City Council of the City of Torrance, California.

For further information, please contact Ted Semaan, Engineering Manager - Major Projects, or Daniel Gruezo, Associate Civil Engineer, in the Public Works Department at (310) 781-6900.

SECTION B

INSTRUCTIONS TO BIDDERS

CITY OF TORRANCE, CALIFORNIA

INSTRUCTIONS TO BIDDERS

A. QUALIFICATION OF BIDDERS

1. Competency of Bidders

The Bidder shall be thoroughly competent and capable of satisfactorily performing the Work covered by the Bid. As specified in the Bid Documents, the Bidder shall furnish statements of previous experience on similar work. When requested, the Bidder shall also furnish the plan of procedure proposed; the organization, machinery, plant and other equipment available for the Work; evidence of its financial condition and resources; and any other such documentation as may be required by the City to determine if the Bidder is responsible.

2. Contractor's License

At the time of submitting the Bid, the Bidder shall be licensed as a contractor in accordance with the provisions of Chapter 9, Division 3, of the California Business and Professions Code. The required prime contractor license class for the Work is shown in the project Notice Inviting Bids. However, the City reserves the right to award the Contract to a contractor with another class if the City determines that the license is proper for the work.

3. Contractor Registration Requirements

SB 854 amended the Labor Code to require all contractors bidding on public work to register with the Department of Industrial Relations (DIR) and to pay an annual fee. The registration requires contractors to provide the State with evidence of the contractors' compliance with a number of statutory requirements. The registration requirement took effect on July 1, 2014.

4. Bidder’s Submittal and Contract Award Prohibited

Under California Labor Code section 1771.1, as amended by SB 854, unless registered with the DIR, a contractor may not bid, nor be listed as a subcontractor, for any bid proposal submitted for public work on or after March 1, 2015. Similarly, a public entity cannot award a public work contract to a non-registered contractor, effective April 1, 2015. Also refer to Section 7-2.6 of the Special Provisions.

B. BIDDER RESPONSIBILITY

A responsible Bidder is a Bidder who has demonstrated the attribute of trustworthiness, as well as ability, fitness, capacity and experience to satisfactorily perform the work.

Bidders are notified that, in accordance with Division 2, Chapter 2 of the Torrance Municipal Code, the City Council may determine whether the Bidder is responsible based on a review of the Bidder's performance on other contracts.

If, based on the provision and criteria in Division 2, Chapter 2 of the Torrance Municipal Code, the Public Works Director proposes not to recommend the award of contract to the

apparent low bidder, the Director shall notify the Bidder in writing of its intention to recommend to the City Council that the Council award the contract to the 2nd lowest responsible bidder. If the Bidder presents evidence in rebuttal to the recommendation, the Director shall evaluate the merits of such evidence, and based on that evaluation, make a recommendation to the City Council.

C. ADDENDA TO THE CONTRACT DOCUMENTS

The City may issue Addenda to the Contract Documents during the period of advertising for any reason. Addenda will be issued only by email and to those considered "Plan Holders". Refer to the Notice Inviting Bid for instructions on becoming a "Plan Holder". The Bidder shall acknowledge the receipt of the Addenda in their Bid. Failure of the Bidder to do so may result in the rejection of the Bid as non-responsive.

D. PREPARATION OF THE BID

1. Examination of Site, Plans and Specifications

Prior to submitting a Bid, the Bidder shall examine the Plans and the Work site, carefully read the Specifications, and satisfy itself that it has the abilities and resources to complete the Work. The Bidder agrees that if it is awarded the Contract, no claim will be made against the City based on ignorance or misunderstanding of the provisions of the Contract Documents, the nature and amount of the work, and the physical and climatic conditions of the work site.

2. Estimated Quantities

The quantities shown in the Bid are approximate only. The Contractor will be paid for the actual quantities of work based on field measurements as provided for in these Specifications. The City reserves the right to increase or decrease the amount of any item or portion of work to be performed or materials furnished, or to delete any item, in accordance with the Specifications.

3. Bid Instructions and Submissions

The Bid shall be submitted on the Bidder's Submittal forms provided by the City Clerk. All Bid Documents listed below must be completed, executed and submitted with the Bid by the Bidder.

Required Bidder's Submittal Documents:
1) Bidder's Submittal
2) Addenda Acknowledgment Of Addenda Received
3) Contractor's Affidavit
4) List of Subcontractors
5) References (2 pages)
6) Violations of Federal or State Law
7) Bid Bond (10%)

All prices submitted will be considered as including any and all sales or use taxes. For any individual bid item, in the case of a discrepancy between its unit price and total bid, the unit price shall always prevail.

4. Disadvantaged Business Enterprise (DBE) Requirements

This project has no DBE requirements.

E. BID BOND

The Bid must be accompanied by either cash, a certified or cashier's check or a surety bond (bid bond) payable to the City of Torrance. Bids must be submitted on the proposal forms furnished by the City Clerk. The Bid Guaranty shall be in an amount equivalent to at least 10% of the Total Contract Bid Price.

F. NONRESPONSIVE BIDS AND BID REJECTION

1. A Bid in which any one (1) of the required Bidder's submittal documents are not completed, executed and submitted may be considered non-responsive and be rejected.

2. A Bid in which the Contract Unit Prices are unbalanced, which is incomplete or which shows alteration of form or irregularities of any kind, or which contains any additions or conditional or alternate Bids that are not called for, may be considered non-responsive and be rejected.

G. AWARD OF CONTRACT

In accordance with Division 2, Chapter 2 of the Torrance Municipal Code, the City Council reserves the right to reject any and all bids received, to take all bids under advisement for a period not-to-exceed sixty (60) days after date of opening thereof, to waive any informality or irregularity in the Bid, and to be the sole judge of the merits of material included in the respective bids received.

No less than 2 weeks prior to the anticipated City Council meeting awarding a contract as a result of the Notice Inviting Bids, the City will notify all of the vendors that submitted a bid of the intention to award.

City of Torrance Bid/RFP Protest Procedures: The City of Torrance Bid/RFP Protest Procedures may be found on the City of Torrance website:
http://www.torranceca.gov/PDF/Bid_RFP_Protest_Procedures.pdf

H. EXECUTION OF CONTRACT

After the Contract is awarded, the awardee shall execute the following eight (8) documents:

1) Performance Bond (100% of Bid)
2) Labor and Material Bond (100% of Bid)
3) Contract (Public Works Agreement)
4) Verification of Insurance Coverage (Certificates and Endorsements)
5) Construction or Service Contract Endorsement
6) Workers' Compensation Insurance Certificate
7) Construction Permit Application Form
8) Business License Application Form

I. APPRENTICESHIP EMPLOYMENT STANDARDS

The Contractor is directed to the provisions in Sections 1776, 1777.5 and 1777.6 of the California Labor Code concerning the employment of apprentices by the contractor or any subcontractor under them.

J. PERMITS, LICENSES AND PUBLIC WORKS AGREEMENT

The Contractor shall procure and execute all permits, licenses, pay all charges and fees, and give all notices necessary and incidental to the completion of the Work. The Contractor shall execute a Public Works Agreement. No fee is charged for a Construction-Excavation Permit issued by the City of Torrance for a public works project. The Contractor shall obtain a City of Torrance Business License.

K. INSURANCE

The Contractor shall maintain Automobile Liability, General Liability and Workers' Compensation Insurance as specified in the Public Works Agreement included in the Project Specifications.

L. PRE-BID INQUIRIES

A Bidder with a Pre-Bid Inquiry must submit their question(s) in writing to the Torrance Public Works Department. Any and all questions must be emailed to Daniel Gruezo, Associate Civil Engineer, at DGruezo@TorranceCA.gov. Please list "**FARMERS' MARKET BOLLARD INSTALLATION RFI"** in the subject line of the email.

All questions must be received no later than 1:00 p.m. on the Wednesday one week prior to the date for opening the bids. Questions received after this date may not be considered. For questions of a general nature, a bidder may call Daniel Gruezo directly at (310) 618-3032.

SECTION C

BID DOCUMENTS

BIDDER'S SUBMITTAL

PROPOSAL, SPECIFICATIONS, BOND AND AFFIDAVIT FOR THE CONSTRUCTION OF

FARMERS' MARKET BOLLARD INSTALLATION, FEAP 910

B2015-16

Company: _____

This Bid requires a Bidder to separately list its Total Base Bid pricing and Total Base Bid plus Additive Bid pricing below. The Bidder must list its total pricing in numbers for each option. If a Bidder fails to list its total price for any one option, the Bidder would be considered non-responsive for that option only.

The City will determine the lowest responsible bidder for each of the options. For the purpose of awarding the contract, the City will select one of the options only and subsequently recommend award to the Bidder who is determined the lowest responsible bidder for the City's selected option.

In the event a Bidder does not correctly list its total pricing on this page, the City will determine the correct total pricing from the individual bid schedules included herein.

Construction Options (list total bid in numbers)

1. Total Base Bid Price: $_____

2. Total Base Bid plus Additive Bid Price: $_____

BIDDER'S SUBMITTAL

Company: _____Total Base Bid: _____

PROPOSAL, SPECIFICATIONS, BOND AND AFFIDAVIT FOR THE CONSTRUCTION OF

FARMERS' MARKET BOLLARD INSTALLATION, FEAP 910
B2015-16

Honorable Mayor and Members
of the Torrance City Council
Torrance, California

Members of the Council:

In accordance with the Notice Inviting Bids pertaining to the receiving of sealed proposals by the City Clerk of the City of Torrance for the above titled improvement, the undersigned hereby proposes to furnish all Work to be performed in accordance with the Plans, Specifications, Standard Drawings, and the Contract Documents, for the unit price or lump sum set forth in the following schedule.

BASE BID SCHEDULE

Item #	Est. Qty	Unit	Bid Item Description	SPEC. SECTION	Unit Price	Total Bid
1	1	LS	**MOBILIZATION (5% MAX. OF TOTAL BID SCHEDULE COST)**	9-3.4	$	$
2	118	EA	**INSTALL CALPIPE SECURITY BOLLARDS 4" DIAMETER FIXED POST BOLLARDS (PART NO. IBF04040, DOME CAP, TIGER DRYLAC POWDER COATING RAL 6018 49/52720 38/50018) OR APPROVED EQUAL IN CONCRETE PER MANUFACTURER'S RECOMMENDATIONS**	304-6	$	$
3	118	EA	**INSTALL 4' CONCRETE WHEEL STOPS AND SECURE WITH ANCHOR PINS**	313	$	$
4	500	LF	**REPLACE STRIPING REMOVED OR DAMAGED DURING CONSTRUCTION ACTIVITIES**	310	$	$

TOTAL BASE BID PRICE $_____
(Figures)*

TOTAL BASE BID PRICE: _____
(Words)*

_____

ADDITIVE BID SCHEDULE

Item #	Est. Qty	Unit	Bid Item Description	SPEC. SECTION	Unit Price	Total Bid
5	30	EA	**INSTALL CALPIPE SECURITY BOLLARDS 4" DIAMETER MANUAL LIFT RETRACTABLE BOLLARDS (PART NO. LBMR04040) OR APPROVED EQUAL IN CONCRETE PER MANUFACTURER'S RECOMMENDATIONS**	304-6	$	$
6	12	EA	**INSTALL 4" DIAMETER MANUAL LIFT RETRACTABLE BOLLARDS (PART NO. LBMR04040) OR APPROVED EQUAL IN ASPHALT PER MANUFACTURER'S RECOMMENDATIONS**	304-6	$	$

TOTAL ADDITIVE BID PRICE $_____
(Figures)*

TOTAL ADDITIVE BID PRICE: _____
(Words)*

_____

TOTAL BASE BID PLUS ADDITIVE BID PRICE $_____
(Figures)*

TOTAL BASE BID PLUS ADDITIVE BID PRICE: _____
(Words)*

_____

***BID MAY BE REJECTED IF TOTAL IS NOT SHOWN IN FIGURES AND WORDS.**
B2015-16

BIDDER'S SUBMITTAL (Continued) B2015-16

The undersigned furthermore agrees to enter into and execute a contract, with necessary bonds, at the unit prices set forth herein and in case of default in executing such contract, with necessary bonds, the check or bond accompanying this bid and the money payable thereon shall be forfeited thereby to and remain the property of the City of Torrance.

The above unit prices include all work appurtenant to the various items as outlined in the Specifications and all work or expense required for the satisfactory completion of said items. In case of discrepancies between unit prices and totals, the unit prices shall govern.

The undersigned declares that it has carefully examined the Specifications and Contract Documents, and has investigated the site of the work and is familiar with the conditions thereon.

Contractor:_____

Date: _____ By:_____

Contractor's State License No. _____ Class_____

Address:_____

Phone: _____

Fax: _____

ACKNOWLEDGMENT OF ADDENDA RECEIVED – B2015-16

The Bidder shall acknowledge the receipt of addenda by placing an "X" by each addendum received.

Addendum No. 1 ____

Addendum No. 2 ____

Addendum No. 3 ____

Addendum No. 4 ____

Addendum No. 5 ____

Addendum No. 6 ____

Addendum No. 7 ____

Addendum No. 8 ____

If an addendum or addenda have been issued by the City and not noted above as being received by the Bidder, the Bid Proposal may be rejected.

_____ _____

Bidder's Signature Date

CONTRACTOR'S AFFIDAVIT

STATE OF CALIFORNIA }
}
COUNTY OF _____} **B2015-16**

_____, being first duly sworn, deposes and says:

1. That he is the
_____
Title

of _____
(Name of Partnership, Corporation, or Sole Proprietorship)

hereinafter called "Contractor," who has submitted to the City of Torrance a proposal for the Construction of FARMERS' MARKET BOLLARD INSTALLATION, FEAP 910, B2015-16;

2. That said proposal is genuine; that the same is not sham; that all statement of facts therein are true;

3. That such proposal was not made in the interest or behalf of any person, partnership, company, association, organization or corporation not named or disclosed;

4. That the Contractor did not, directly or indirectly, induce, solicit or agree with anyone else to submit a false or sham bid, to refrain from bidding, or to withdraw the bid, to raise or fix the bid price of the Contractor or anyone else, or to raise or fix any overhead, profit or cost element of the Contractor's price or the price of anyone else; and did not attempt to induce action prejudicial to the interest of the City of Torrance, or of any other bidder, or anyone else interested in the proposed contract;

5. That the Contractor has not in any manner sought by collusion to secure for itself an advantage over any other bidder or to induce action prejudicial to the interests of the City of Torrance, or of any other bidder or of anyone else interested in the proposed contract;

6. That the Contractor has not accepted any bid from any subcontractor or materialman through any bid depository, the bylaws, rules or regulations of which prohibit or prevent the Contractor from considering any bid from any subcontractor or materialman, which is not processed through said bid depository, or which prevent any subcontractor or materialman from bidding to any contractor who does not use the facilities of or accept bids from or through such bid depository;

7. That the Contractor did not, directly or indirectly, submit the Contractor's bid price or any breakdown thereof, or the contents thereof, or divulge information or data relative thereto, to any corporation, partnership, company, association, organization, bid depository, or to any member or agent thereof, or to any individual or group of Individuals, except to the City of Torrance, or to any person or persons who have a partnership or other financial interest with said Contractor in its business.

Dated this _____ day of _____, 20___.

Subscribed and Sworn to
before me this _____ day
of _____, 20___.

_____
Notary Public in and for said
County and State.
(Seal)

_____
(Contractor)

_____
(Title)

LIST OF SUBCONTRACTORS: B2015-16

The Bidder is required to fill in the following blanks in accordance with the provisions of the California Public Contract Code Sections 4100-4114, CHAPTER 4. SUBLETTING AND SUBCONTRACTING. The contractor, sub recipient or subcontractor shall not discriminate on the basis of race, color, national origin, or sex in the performance of this contract. The contractor shall carry out applicable requirements of Title 49 CFR (Code of Federal Regulations) part 26 in the award and administration of US DOT assisted contracts. Failure by the contractor to carry out these requirements is a material breach of this contract, which may result in the termination of this contract or such other remedy, as the recipient deems appropriate. Each subcontract signed by the bidder must include this assurance. Failure of the bidder to fulfill the requirements of the Special Provisions for submittals required to be furnished after bid opening, including but not limited to escrowed bid documents, where applicable, may subject the bidder to a determination of the bidder's responsibility in the event it is the apparent low bidder on a future public works contracts.

Name Under Which Subcontractor is Licensed: _____

Subcontractor's Address: _____

Specific Description of Sub-Contract: _____

License Number: _____ CA License Classification/Type: _____

Name Under Which Subcontractor is Licensed: _____

Subcontractor's Address: _____

Specific Description of Sub-Contract: _____

License Number: _____ CA License Classification/Type: _____

Name Under Which Subcontractor is Licensed: _____

Subcontractor's Address: _____

Specific Description of Sub-Contract: _____

License Number: _____ CA License Classification/Type: _____

Subcontractors listed must be properly licensed under the laws of the State of California for the type of work which they are to perform. Do not list alternate subcontractors for the same work.

The Bidding Contractor must include each subcontractor's contract license number (AB 44). An inadvertent error in listing the subcontractor's license number shall not be grounds for filing a bid protest, or grounds for considering the bid nonresponsive, if the corrected contractor's license number is submitted to the public entity by the prime contractor within 24 hours after the bid opening – provided that the corrected license number corresponds to the submitted name and location of the subcontractor.

REFERENCES (Page 1 of 2)
B2015-16

List work similar in magnitude and degree of difficulty completed by the Contractor within the past three (3) years.

1. Name (Firm/Agency): _____
   Address: _____
   Contact Person: _____ Telephone No.: _____
   Title of Project: _____
   Project Location: _____
   Date of Completion: _____ Contract Amount: $ _____

2. Name (Firm/Agency): _____
   Address: _____
   Contact Person: _____ Telephone No.: _____
   Title of Project: _____
   Project Location: _____
   Date of Completion: _____ Contract Amount: $ _____

3. Name (Firm/Agency): _____
   Address: _____
   Contact Person: _____ Telephone No.: _____
   Title of Project: _____
   Project Location: _____
   Date of Completion: _____ Contract Amount: $ _____

4. Name (Firm/Agency): _____
   Address: _____
   Contact Person: _____ Telephone No.: _____
   Title of Project: _____
   Project Location: _____
   Date of Completion: _____ Contract Amount: $ _____

REFERENCES (PAGE 2 OF 2)
B2015-16

If Contractor has not performed work for the City of Torrance within the last five (5) years, list all work done within said five years (attach additional sheets if necessary). Note if work was done as subcontractor [include only subcontract amount]:

Work Description & Contract Amount	Agency	Date Completed

Contractor's License No.: _____ Class: _____

a. Date first obtained: _____ Expiration: _____

b. Has License ever been suspended or revoked? _____

If yes, describe when and why: _____

c. Any current claims against License or Bond? _____

If yes, describe claims: _____

Principals in Company (List all – attach additional sheets if necessary):

NAME	TITLE (If Applicable)	LICENSE NO.
_____	_____	_____
_____	_____	_____
_____	_____	_____

VIOLATIONS OF FEDERAL, STATE OR LOCAL LAWS
B2015-16

1. Has your firm or its officers been assessed any penalties by an agency for noncompliance or violations of Federal, State or Local labor laws and/or business or licensing regulations within the past five (5) years relating to your construction projects?

   Yes/No: _____ Federal/State:_____

   If "yes," identify and describe, (including agency and status): _____

   _____

   _____

   _____

   Have the penalties been paid? Yes/No: _____

2. Does your firm or its officers have any ongoing investigations by any public agency regarding violations of the State Labor Code, California Business and Professions Code or State Licensing Laws?

   Yes/No: _____ Code/Laws: _____ Section/Article: _____

   If "yes," identify and describe, (including agency and status): _____

   _____

   _____

   _____

BID BOND (10%)
B2015-16

KNOW ALL MEN BY THESE PRESENTS: That we, _____

_____

as principal, and _____

as sureties, are held and firmly bound unto the City of Torrance, State of California, in the penal sum of _____ dollars ($_____), for the payment whereof we hereby bind ourselves, our successors, heirs, executors or administrators jointly and severally, firmly by these presents.

The condition of this obligation is such that, whereas the above bounded principal is about to file with and submit to the City of Torrance a bid or proposal for the performance of certain work as required in the City of Torrance, Project No. B2015-16, said work being: the FARMERS' MARKET BOLLARD INSTALLATION, FEAP 910, and in compliance with the Specifications therefor under an invitation of said City contained in a notice or advertisement for bids or proposals; now if the bid or proposal of the said principal shall be accepted and if the said work be thereupon awarded to the principal by said City and if the said principal shall enter into a contract with the said City in accordance with said bid or proposal, or if the bid or proposal of the said principal is rejected, then this bond shall be void and of no effect and otherwise in full force and effect.

WITNESS our hands this _____ day of _____, 20___.

_____
Principal

_____
Surety/Attorney-in-Fact

_____
Signature

Name: _____
Local Address: _____
_____
Phone No.: _____
Fax No.: _____

SECTION D

DOCUMENTS TO BE COMPLETED AND DELIVERED TO CITY AFTER AWARD OF CONTRACT (PUBLIC WORKS AGREEMENT) BY THE CITY COUNCIL

PERFORMANCE BOND

KNOW ALL MEN BY THESE PRESENTS:

That we, _____as Principal(s) and _____a corporation, incorporated, organized, and existing under the laws of the State of _____, and authorized to execute bonds and undertakings and to do a general surety business in the State of California, as Surety, are jointly and severally held and firmly bound unto the City of Torrance, a municipal corporation, located in the County of Los Angeles, State of California, in the full and just sum of: _____ Dollars ($_____), lawful money of the United States of America, for the payment of which sum, well and truly to be made, we bind ourselves and our respective heirs, executors, administrators, representative, successors and assigns, jointly and severally, firmly by these presents.

THE CONDITION OF THIS OBLIGATION IS SUCH, that: **WHEREAS,** said Principal(s) have/has entered into, or are/is about to enter into, a certain written contract or agreement, dated as of the _____ day of _____, 20____, with the said City of Torrance for the Construction of FARMERS' MARKET BOLLARD INSTALLATION, FEAP 910), B2015-16, all as is more specifically set forth in said contract or agreement, a full, true and correct copy of which is hereunto attached, and hereby referred to and by this reference incorporated herein and made a part hereof;

NOW, THEREFORE, if the said Principal(s) shall faithfully and well and truly do, perform and complete, or cause to be done, performed and complete, each and all of the covenants, terms, conditions, requirements, obligations, acts and things, to be met, done or performed by said Principal(s), including any guarantee period as set forth in, or required by, said contract or agreement, all at and within the time or times, and in the manner as therein specified and contemplated, then this bond and obligation shall be null and void; otherwise it shall be and remain in full force, virtue and effect.

The said Surety, for value received, hereby stipulates and agrees that no amendment, change, extension of time, alteration or addition to said contract or agreement, or of any feature or item or items of performance required therein or thereunder, shall in any manner affect its obligations on or under this bond; and said Surety does hereby waive notice of any such amendment, change, extension of time, alteration, or addition to said contract or agreement, and of any feature or item or items of performance required therein or thereunder.

PERFORMANCE BOND (CONTINUED)

In the event any suit, action or proceedings is instituted to recover on this bond or obligation, said Surety will pay, and does hereby agree to pay, as attorney's fees for said City, such sum as the Court in any such suit, action or proceeding may adjudge reasonable.

EXECUTED, SEALED AND DATED this _____ day of _____, 201___.

CORPORATE SEAL

PRINCIPAL(S):

BY _____

BY _____

CORPORATE SEAL

SURETY:

BY _____

LABOR AND MATERIAL BOND

KNOW ALL MEN BY THESE PRESENTS:

That we,_____
As Principal(s) and _____ a corporation, incorporated, organized, and existing under the laws of the State of _____, and authorized to execute bonds and undertakings and to do a general surety business in the State of California, as Surety, are jointly and severally held and firmly bound unto:

(a) The State of California for the use and benefit of the State Treasurer, as ex-officio Treasurer and custodian of the Unemployment Fund of said State; and

(b) The City of Torrance, California; and

(c) Any and all persons who do or perform or who did or performed work or labor upon or in connection with the work or improvement referred to in the contract or agreement hereinafter mentioned; and

(d) Any and all materialmen, persons, companies, firms, association, or corporations, supplying or furnishing any materials, provisions, provender, transportation, appliances or power, or other supplies used in, upon, for or about or in connection with the performance of the work or improvement contracted to be executed, done, made or performed under said contract or agreement; and

(e) Any and all persons, companies, firms, associations, or corporations furnishing, renting, or hiring teams, equipment, implements or machinery for, in connection with, or contributing to, said work to be done or improvement to be made under said contract or agreement; and

(f) Any and all persons, companies, firms, associations, or corporations who supply both work and materials;

and whose claim has not been paid by said Principal(s), in full and just sum of _____ Dollars ($_____), lawful money of the United States of America, for the payment of which will and truly to be made, said Principal(s) and said Surety do hereby bind themselves and their respective heirs, executors, administrators, representatives, successors and assigns, jointly and severally, firmly by these presents.

LABOR AND MATERIAL BOND (CONTINUED)

THE CONDITION OF THE FOREGOING OBLIGATION IS SUCH, THAT: WHEREAS, said Principal(s) have/has entered into or are/is about to enter into a certain written contract or agreement, dated as of the _____ day of _____20 ___, with the City of Torrance for the Construction of FARMERS' MARKET BOLLARD INSTALLATION, FEAP 910, Bid No. B2015-16, all as is more specifically set forth in said contract or agreement, a full, true and correct copy of which is hereunto attached, and hereby referred to and by this reference incorporated herein and made a part hereof;

NOW, THEREFORE, if the said Principal(s) (or any of his/her, its, or their subcontractors) under said contract or agreement fails or fail to pay:

(1) For any materials, provisions, provender, transportation, appliances, or power, or other supplies; or

(2) For the hire of any teams, equipment, implements, or machinery; or

(3) For any work or labor; supplies, furnished, provided, used, done or performed in, upon, for or about or in connection with the said work or improvement; or

(4) For amounts due under the Unemployment Insurance Act of the State of California with respect to such work or improvement;

the Surety on this bond will pay the same in an amount not exceeding the sum hereinabove specified in this bond; and, also, in case suit is brought upon this bond, said Surety will (and does hereby agree to) pay a reasonable attorney's fee, to be fixed and taxed as costs, and included in the judgment therein rendered.

This bond shall (and it is hereby made to) insure to the benefit of any and all persons entitled to file claims under Section 1192.1 of the Code of Civil Procedure of the State of California, so as to give a right of action to them or their assigns in any suit brought upon this bond, all as contemplated under the provisions of Section 4205 of the Government Code, and of Chapter 1 of Title 4 of Part 3 of the Code of Civil Procedure, of the State of California.

This bond is executed and filed in connection with said contract or agreement hereunto attached to comply with each and all of the provisions of the laws of the State of California above mentioned or referred to, and of all amendments thereto, and the obligors so intend and do hereby bind themselves accordingly.

LABOR AND MATERIAL BOND (CONTINUED)

The said Surety, for value received, hereby stipulates and agrees that no amendment, change, extension of time, alteration, or addition to said contract or agreement, or of any feature or item or items of performance required therein or thereunder, shall in any manner affect its obligations on or under this bond; and said Surety does hereby waive notice of any such amendment, change, extension of time, alteration, or addition to said contract or agreement, and of any feature or item or items of performance required therein or thereunder.

EXECUTED, SEALED AND DATED this _____ day of _____, 20 _____

CORPORATE SEAL

PRINCIPAL:

BY _____

CORPORATE SEAL

SURETY:

BY _____

PUBLIC WORKS AGREEMENT

BIDDERS ARE TO REFER TO APPENDIX I FOR THE PRO FORMA PUBLIC WORKS AGREEMENT TO BE EXECUTED, UPON APPROVAL OF THE CITY COUNCIL, WITH THE CONFIRMED LOWEST, RESPONSIBLE BIDDER.

CITY OF TORRANCE
CONSTRUCTION OR SERVICE CONTRACT ENDORSEMENT

To be attached to and made a part of all policies insuring the liability of any person, form or corporation performing services under contract for the City of Torrance.

Not withstanding any inconsistent expression in the policy to which this endorsement is attached, or in any other endorsement now or hereafter attached thereto, or made a part thereof, the protection afforded by said policy shall:

1. Include the City of Torrance as an additional insured. (To include the elected officials, appointed officials, and employees.)

2. Indemnify and save harmless the City of Torrance against any and all claims resulting from the undertaking specified in the contract known as:

PROPOSAL, SPECIFICATIONS, BOND AND AFFIDAVIT
FOR THE CONSTRUCTION OF
FARMERS' MARKET BOLLARD INSTALLATION, FEAP 910

B2015-16

This hold harmless assumption on the part of the underwriters shall include all costs of investigation and defense, including claims based on damage to substructures not shown, not located on the plans, or shown incorrectly.

3. Not be cancelled except by notice to the City Attorney of the City of Torrance at least thirty (30) days prior to the date of cancellation.

4. Provide single limit for Bodily Injury Liability and Property Damage Liability combined, $1,000,000 each Occurrence, and $1,000,000 Aggregate.

5. Limited classifications, restricting endorsements, exclusions or other special provisions contained in the policy shall not act to limit the benefits of coverage as they shall apply to the City of Torrance as enumerated in this endorsement. However, nothing herein contained shall affect any rights of the insurer against the insured.

6. It is further expressly agreed by and between the parties hereto that the following two provisions, (a) and (b), are a part of this contract:

   (a) That the Contractor specifically agrees to comply with applicable provisions of Section 1777.5 of the Labor Code relating to the employment by contractor or subcontractor under it, of journeyman or apprentices, or workmen, in any apprenticeable craft or trade.

   (b) By my signature hereunder, as Contractor, I certify that I am aware of the provisions of Section 3700 of the Labor Code which requires every employer to be insured against liability for Workers' Compensation or to undertake self-insurance in accordance with the provisions of that code, and I will comply with such provisions before commencing the performance of the work of this contract.

The limits of liability as stated in this endorsement apply to the insurance afforded by this endorsement notwithstanding that the policy may have lower limits of liability applying elsewhere in the policy.

_____
Duly Authorized Agent

Attached to and forming part of
Policy No. _____
of the _____

Date: _____
Expiration Date: _____

WORKERS' COMPENSATION INSURANCE CERTIFICATION

In compliance with Section 7-4 of the Standard Specifications, the Contractor shall complete and submit the following certification with a Certificate of Insurance before execution of the contract.

I am aware of, and will comply with, Section 3700 of the Labor Code, requiring every employer to be insured against liability for Workers' Compensation or to undertake self-insurance before commencing any of the work.

_____
CONTRACTOR

By: _____

Title:_____

SECTION E

SPECIAL PROVISIONS

The following Special Provisions supplement and amend the Standard Specifications for Public Works Construction (latest edition) and the Standard Specifications of the State of California Department of Transportation (Caltrans), latest edition, as noted herein. These Special Provisions have been arranged into a format that parallels the Standard Specifications for Public Works Construction.

SECTION E - SPECIAL PROVISIONS

Table of Contents

Page

PART 1 - GENERAL PROVISIONS

SECTION 1 -TERMS, DEFINITIONS, ABBREVIATIONS, UNITS OF MEASURE AND SYMBOLS **E-4**
1-2 TERMS AND DEFINITIONS
1-3 ABREVIATIONS

SECTION 2 - SCOPE AND CONTROL OF THE WORK **E-4**
2-1 AWARD AND EXECUTION OF CONTRACT
2-4 CONTRACT BONDS
2-5 PLANS AND SPECIFICATIONS
2-6 WORK TO BE DONE
2-10 AUTHORITY OF THE BOARD AND THE ENGINEER
2-11 INSPECTION

SECTION 3 - CHANGES IN WORK **E-9**
3-2 CHANGES INITIATED BY THE AGENCY
3-3 EXTRA WORK
3-4 CHANGED CONDITIONS

SECTION 4 – CONTROL OF MATERIALS **E-11**
4-1 MATERIALS AND WORKMANSHIP

SECTION 5 - UTILITIES **E-11**
5-1 LOCATION
5-2 PROTECTION
5-3 REMOVAL
5-5 DELAYS

SECTION 6 - PROSECUTION, PROGRESS & ACCEPTANCE OF THE WORK **E-14**
6-1 CONSTRUCTION SCHEDULE AND COMMENCEMENT OF WORK
6-7 TIME OF COMPLETION
6-8 COMPLETION, ACCEPTANCE AND WARRANTY
6-9 LIQUIDATED DAMAGES
6-11 SEQUENCE OF CONSTRUCTION

SECTION 7 - RESPONSIBILITIES OF THE CONTRACTOR **E-17**
7-2 LABOR
7-3 INSURANCE
7-4 *NOT USED*
7-5 PERMITS
7-6 THE CONTRACTOR'S REPRESENTATIVE
7-8 WORK SITE MAINTENANCE
7-9 PROTECTION AND RESTORATION OF EXISTING IMPROVEMENTS

7-10 PUBLIC CONVENIENCE AND SAFETY

SECTION 9 - MEASUREMENT AND PAYMENT **E-27**
9-1 MEASUREMENT OF QUNATITIES FOR UNIT PRICE WORK
9-2 LUMP SUM WORK
9-3 PAYMENT
9-4 CLAIMS

PART 2 - CONSTRUCTION MATERIALS

SECTION 200 - ROCK MATERIALS **E-30**
200-2 UNTREATED BASE MATERIALS

SECTION 206 - MISCELLANEOUS METAL ITEMS
206-7 SECURITY BOLLARDS

PART 3 - CONSTRUCTION METHODS

SECTION 300 - EARTHWORK **E-30**
300-1 CLEARING AND GRUBBING

SECTION 303 - CONCRETE AND MASONRY CONSTRUCTION **E-32**
303-5 CONCRETE CURBS, WALKS, GUTTERS, CROSS-GUTTERS, ALLEY INTERSECTIONS, ACCESS RAMPS AND DRIVEWAYS

SECTION 304 - METAL FABRICATION AND CONSTRUCTION **E-32**
304-6 SECURITY BOLLARDS

SECTION 310 - PAINTING **E-33**
310-5 PAINTING VARIOUS SURFACES
(Replaced with Sections 84-1 and 84-2 of Caltrans Standard Specifications)

SECTION 313 - CONCRETE WHEEL STOPS **E-33**

PART 1 - GENERAL PROVISIONS

SECTION 1 - TERMS, DEFINITIONS, ABBREVIATIONS, UNITS OF MEASURE, AND SYMBOLS

1-2 **TERMS AND DEFINITIONS**. Add or redefine the following:

Agency – The City of Torrance, herein referred to as CITY.

Board – The City Council of the City of Torrance, herein referred to as City Council.

Engineer –The Public Works Director and/or City Engineer of the City of Torrance, acting either directly or through properly authorized agents, such agents acting within the scope of the particular duties entrusted to them.

Claim - A separate demand by the Contractor for (A) a time extension, (B) payment of money or damages arising from work done by or on behalf of the Contractor pursuant to the Contract and payment of which is not otherwise expressly provided for or the claimant is not otherwise entitled to, or (C) an amount the payment of which is disputed by the Agency.

Add the following:

Working Day – Any day within the period between the date of the start of the Contract time as specified in 6-1 and the date of completion of the Work as specified in 6-8.1, other than:

g) Tuesday on the Tuesday Torrance Certified Farmers' Market. The Public Works Director and/or City Engineer of the City of Torrance, acting either directly or through properly authorized agents, such agents acting within the scope of the particular duties entrusted to them.

1-3 ABBREVIATIONS.

1-3.2 Common Usage:

Add the following abbreviations:

Approx	Approximate
Exist.	Existing
Med.	Median
Ped.	Pedestrian
Reconst.	Reconstruct
Temp.	Temporary

SECTION 2 - SCOPE AND CONTROL OF THE WORK

2-1 AWARD AND EXECUTION OF CONTRACT. Replace the entire subsection with the following:

Within ten (10) working days after the date of the CITY'S award of contract, the Contractor shall execute and return all Contract Documents required by the CITY. The CITY reserves the right to terminate the award if the above requirement is not met. Such termination will result in the forfeiture of the Proposal Guaranty.

The Contract shall not be considered binding upon the CITY until executed by the authorized CITY officials.

2-4 CONTRACT BONDS. Revise the second sentence of the fourth paragraph to read as follows:

The "Performance Bond" shall remain in effect for one year following the date specified in the Notice of Completion or, if no Notice of Completion is recorded, for one year following the date of final acceptance by the Engineer.

2-5. PLANS AND SPECIFICATIONS.

2-5.1 General. Add the following sentence to the first paragraph to read as follows:

The Contractor shall maintain a control set of Plans and Specifications on the Work site at all times. All final locations determined in the field, and any deviations from the Plans and Specifications, shall be marked in red on this control set to show as-built conditions. Upon completion of the Work, the Contractor shall submit the control set to the Engineer for approval. Final payment will not be made until this requirement is met.

Add the following subsections:

2-5.1.1 Plans. Included as part of the Contract Documents are the following, which show the location, character, dimensions or details of the Work:

1) Project Plans

The existing utility information and data provided with the Contract Documents are based on existing plans and documents. The plans and data are provided for information only. The Owner does not guarantee their accuracy and correctness. If the Bidder in preparing the Bid Proposal uses this information, the Bidder assumes all risks resulting from conditions differing from the information shown. The Bidder, in consideration for the information being provided, hereby releases the Owner and Consulting Engineer from any responsibility of obligation as to the accuracy of such information or for any additional compensation for work performed due to assumptions based on the use of such information.

2) Standard Plans

a. City of Torrance Standard Plans, latest edition

b. Standard Plans for Public Works Construction, latest edition, promulgated by Public Works Standards, Inc.

c. Standard Plans of the State of California Department of Transportation (Caltrans), latest edition

d. Standard Plans of the Los Angeles County Department of Public Works, latest edition

e. American Water Works Association Standards, latest edition.

Applicable Standard Plans and information for this project are included in the Appendices of these Specifications.

2-5.1.2 Specifications. The Work shall be performed or executed in accordance with these Special Provisions and the following:

1) Standard Specifications for Public Works Construction, latest edition and supplements thereto, hereinafter referred to as the Standard Specifications, as written and promulgated by Public Works Standards, Inc. The Standard Specifications are published by BNi Building News, Inc., 1612 South Clementine Street, Anaheim, CA 92802, Phone: (800) 873-6397.

2) Sections 56-2, 84, 85, and 86 of the State of California Department of Transportation (Caltrans) Standard Specifications, latest edition

3) American Water Works Association Standards, latest edition.

2-5.2 Precedence of Contract Documents. Replace the entire subsection with the following:

If there is a conflict between any of the Contract Documents, the document highest in precedence shall control. The order of precedence shall be as follows:

1) Change Orders (including Plans and Specifications attached thereto).
2) Permits issued by other agencies.
3) Public Works Agreement
4) Addenda
5) Special and General Provisions
6) Plans
7) City Standard Plans
8) Other Standard Plans
9) Standard Specifications for Public Works Construction
10) Reference Specifications

With reference to the Plans/Drawings, the order of precedence is as follows:

1) Change Order plans govern over Addenda and Contract plans
2) Addenda plans govern over Contract plans
3) Contract plans govern over standard plans
4) Detail plans govern over general plans
5) Figures govern over scaled dimensions

Within the Specifications, the order of precedence is as follows:

1) Change Orders
2) Permits from other agencies/Supplemental Agreements
3) Special Provisions
4) Instruction to Bidders
5) Referenced Standard Plans
6) Referenced Standard Specifications

If the Contractor, in the course of the Work, becomes aware of any claimed errors or omissions in the Contract Documents or in the CITY's fieldwork, the Contractor shall immediately inform the Engineer. The Engineer shall promptly review the matter, and if the Engineer finds an error or omission has been made the Engineer shall determine the corrective actions and advise the Contractor accordingly. If the corrective work associated with an error or omission increases or decreases the amount of work called for in the Contract, the CITY shall issue an appropriate

Change Order in accordance with 3-3. After discovery of an error or omission by the Contractor, any related work performed by the Contractor shall be done at the Contractor's risk unless authorized by the Engineer.

2-5.3 Submittals

2-5.3.4 Supporting Information. Replace the second paragraph with the following:

Submittals are required for the following:

1) Construction schedule per 6-1.
2) Concrete mix designs per 201-1.1
3) 4-inch fixed post bollards
4) 4-inch manual lift retractable bollards
5) Concrete Wheel Stops

In addition to the above, submittals may be required for any product, manufactured item, or system not specifically listed above.

2-6 WORK TO BE DONE. Add the following:

The Work generally consists of furnishing all materials, equipment, tools, labor, and incidentals as required by the Plans, Specifications, and contract documents. The general items of work include fixed post bollard, manual lift retractable bollard, and concrete wheel stop installations, parking stall striping and other items not mentioned that are required by the Plans and Specifications.

2-10 AUTHORITY OF THE BOARD AND THE ENGINEER. Add the following:

Failure of the Contractor to comply with the requirements of the Contract Documents, or to follow the directions of the Engineer, and/or to immediately remedy such noncompliance or to follow directions, may, upon notice from the Engineer, result in the suspension of the Contract monthly progress payments. Any monthly progress payments so suspended may remain in suspension until the Contractor is in compliance with the Contract Documents and the directions of the Engineer, as determined by the Engineer.

2-11 INSPECTION. Replace the entire subsection with the following:

The Work is subject to inspection and approval by the Engineer. The Contractor shall notify the Engineer a minimum of 48 hours in advance of the required inspection.

The Engineer will make, or have made, such inspections and tests as he deems necessary to see that the Work is in conformance with the Contract Documents. In the event such inspections or tests reveal noncompliance with the Contract Documents, the Contractor shall bear the cost of such corrective measures as deemed necessary by the Engineer, as well as the cost of subsequent re-inspection and re-testing.

Work done in the absence of inspection by the Engineer may be required to be removed and replaced under the inspection of the Engineer, and the entire cost of removal and replacement, including the cost of all materials which may be furnished by the CITY and used in the work thus removed, shall be borne by the Contractor, regardless of whether the work removed is found to be defective or not. Work covered without the approval of the Engineer shall, if so directed by the

Engineer, be uncovered to the extent required by the Engineer, and the Contractor shall similarly bear the entire cost of performing all the work and furnishing all the materials necessary for the removal of the covering and its subsequent replacement, including all costs for additional inspection.

The Engineer and any authorized representatives shall at all times have access to the Work during its construction at shops and yards as well as the Work site. The Contractor shall provide every reasonable facility for ascertaining that the materials and workmanship are in accordance with the Contract Documents.

Inspection of the Work shall not relieve the Contractor of the obligation to fulfill all conditions of the Contract.

Add the following subsections:

2-11.1 Special Inspection Fees. If the Contractor elects to work under this Contract more than 8 hours/day or more than 40 hours/week, Saturday, Sunday, or CITY holidays, the Contractor shall arrange with the Engineer for the required inspection service and pay the Special Inspection Fees which will be charged at the following rates:

Mondays through Fridays	-	$135.00 per hour
Saturdays, Sundays, Holidays	-	$1,200.00 per day

Fees may be deducted from payments due to the Contractor at the discretion of the Engineer.

If the Contractor works under this contract at times other than within the allowed working hours <u>without permission from or prior arrangement with the Engineer</u>, the Contractor will be charged a lump sum amount of $500.00 for each occurrence, in addition to the above fees. The amount will be deducted from a Progress Payment.

2-11.3 Inspections During Construction. During the construction, the Contractor shall make the Work site available for periodic inspections by the regulatory agencies.

2-11.4 Material Inspection/Testing and other City Expenses.

(a) If a City subcontractor hired to perform material inspection and/or testing is required to work additional time to perform inspection and testing as a result of an action or delay caused by the Contractor, except for specific work allowed by the Engineer, the City subcontractor may charge the City an additional fee. The Engineer may deduct the additional fee for said inspection and testing from a Progress Payment to the Contractor. The Engineer also may deduct the cost to perform additional testing when an initial test fails to meet the requirements of this Contract. The typical rates for material testing and inspection are available upon request from the Public Works Department.

(b) If the Contractor does not comply with a requirement of these Special Provisions or if it does not immediately respond, after being informed, to a request by the Engineer to amend a site condition that jeopardizes the public health, safety or welfare, the Engineer may direct City staff to perform the work. For each occurrence, the City will charge the Contractor a base charge in the amount of $750 in addition to all costs incurred by the City for administration, labor, equipment and materials. The standard rates for City staff are available upon request from the Public Works Department.

(c) For each sign, drum, delineator, cone, barricade, warning device, or other type of required traffic control device that is not provided and/or replaced by the Contractor when required by the Traffic Control Plans and/or directed by the Engineer, the Engineer may deduct $75 per day for each missing device from a Progress Payment.

(d) Temporary lane closures maintained prior to 8:30 A.M. and/or after 3:30 P.M. may have a negative economic effect on the local residential, commercial or industrial community. Unless a temporary lane closure is otherwise authorized, the Engineer may deduct a fee from a Progress Payment for each temporary lane closure maintained prior to 8:30 A.M. or after 3:30 P.M. The fee will be assessed at a rate of $700 per each travel lane per each thirty (30) minute interval, or fraction thereof.

SECTION 3 – CHANGES IN WORK

3-2 CHANGES INITIATED BY THE AGENCY

Section 3-2.2.1 General. Delete this subsection in its entirety. Add the following:

The City reserves the right to increase or decrease any bid item quantity, as necessary, to meet the City's needs and/or the project and/or budget requirements. If the City increases or decreases any bid item quantity by more than 25% of the original contract quantity, either the City or the Contractor may initiate discussions and/or negotiations regarding a potential adjustment to the contract unit bid price.

Section 3-2.2.2. Increases of More Than 25%. Delete this subsection in its entirety.

Section 3-2.2.3. Decreases of More Than 25%. Delete this subsection in its entirety.

3-3 EXTRA WORK

3-3.1 General. Add the following:

Payment for additional work and all expenditures in excess of the Contract Price must be authorized in writing by the Engineer. Such authorization shall be obtained by the Contractor prior to engaging in additional work. It shall be the Contractor's sole responsibility to obtain written approval from the Engineer for any change(s) in material or in the work proposed by suppliers or subcontractors. No payment shall be made to the Contractor for additional work which has not been approved in writing, and the Contractor hereby agrees that it shall have no right to additional compensation for any work not so authorized.

The Contractor shall be responsible to provide all data and to obtain all approvals required by the Specifications, including submittal of Daily Extra Work Reports. No claims or extras shall be approved by the Engineer unless all work was done under the direction of and subject to the approval of the Engineer. Disputed work claims shall comply with 3-3 as modified herein.

3-3.2.2 Basis for Establishing Costs.

3-3.2.2.3 Tool and Equipment Rental. Replace the second paragraph of with the following:

The Contractor will be paid for the use of equipment at the lower of the actual rental rates paid by the Contractor or the rental rates listed for such equipment in either the "Rental Rate Blue Book" published by Dataquest, Inc., 1290 Ridder Park Drive, San Jose, California 95131;

telephone (408) 971-9000 or the California Department of Transportation publication entitled "Labor Surcharge and Equipment Rates" available at the Caltrans web site, www.dot.ca.gov/hq/eqsc/inforesources.htm , which is in effect on the date upon which the work is accomplished, and that hereby is made a part of the Contract, regardless of ownership or any rental or other agreement, if such may exist, for the use of such equipment entered into by the Contractor. If it is deemed necessary by the Engineer to use equipment not listed in the said publication, a suitable rental rate will be established by the Engineer. The Contractor may furnish any cost data that might assist the Engineer in the establishment of such rental rate.

3-3.2.3 Markup. Add the following:

The markups mentioned hereinafter shall include, but are not limited to, all costs for the services of superintendents, project managers, timekeepers and other personnel not working directly on the change order, and pickup or yard trucks used by the above personnel. These costs shall not be reported as labor or equipment elsewhere except when actually performing work directly on the change order and then shall only be reported at the labor classification of the work performed.

3-3.2.3.1 Work by Contractor. Replace the entire subsection with the following:

The following percentages shall be added to the Contractor's costs and shall constitute the mark-up for all overhead and profit, which shall be deemed to include all items of expense not specifically designated as cost or equipment rental in Subsections 3-3.2.2.1, 3-3.2.2.2, and 3-3.2.2.3.

Labor	20
Materials	15
Equipment Rental	15
Other Expenditures	15

To the sum of the costs and markups provided for in this subsection, one (1) percent shall be added as compensation for bonding.

3-3.2.3.2 Work by Subcontractor. Replace the entire subsection with the following:

When any part of the extra work is performed by a subcontractor, the markup established in 3-3.2.3.1 shall be applied to the subcontractor's actual cost of such work. A markup of ten (10) percent on the first $5,000 of the subcontracted portion of the extra work and a mark-up of 5 percent on work added in excess of $5,000 of the subcontracted portion of the extra work may be added by the Contractor.

The markups specified in the two subsections above shall be considered as including, but not limited to, the Contractor's labor costs for personnel not working directly on the extra work, including the cost of any tools and equipment that they may use. Such costs shall not be reported as labor or equipment costs elsewhere except when they are actually used in the performance of the extra work. Labor costs shall in that case be reported for the labor classification corresponding to the type and nature of extra work performed.

3-4 CHANGED CONDITIONS.

Add the following:

This subsection does not apply to utilities.

SECTION 4 – CONTROL OF MATERIALS

4-1 MATERIALS AND WORKMANSHIP.

4-1.1 General.

Add the following paragraph after the second paragraph:

If the work, or any portion thereof, shall be damaged in any way, or if any defective materials or faulty workmanship shall be discovered at any time prior to the final payment, the Contractor shall forthwith, at its own cost and expense, repair said damage, or replace such defective materials, or remedy such faulty workmanship in a manner satisfactory to the Engineer.

4-1.2 Protection of Work and Materials. Add the following:

The Contractor shall assume all risks and expense of interference and delay in his operations, and the protection from or the repair of damage to improvements being built under the contract, as may be caused by water of whatever quantity from floods, storms, industrial waste, irrigation, underground or other sources. However, the Contractor shall be entitled to an extension of time in accordance with the provisions of Subsection 6-6. The Contractor shall also assume full responsibility and expense of protecting, or removing and returning to the site of Work, all equipment or materials under his care endangered by any action of the elements.

Furthermore, the Contractor shall indemnify and hold the City harmless from all claims or suits for damages arising from his operations in dewatering the Work and control of water.

SECTION 5 – UTILITIES

5-1 LOCATION. Add the following:

The Contractor shall provide coordination with all the utility companies involved and shall provide protection from damage to their facilities. The Contractor shall be responsible for repair or replacement to said facilities made necessary by its failure to provide required protection. The Contractor is required to include utility requirements in the Construction Schedule per Section 6-1.

The Contractor shall utilize the services of "Underground Service Alert-Southern California" for utility locating in all public right-of-ways by calling 1-800-227-2600 at least 48 hours prior to any excavation.

Underground lines that are potentially hazardous such as oil company lines, natural gas mains, and electrical conduits will be carefully located by the owner as provided in the Standard Specifications. The Contractor shall take special precautions in determining the precise location and depth of these structures to insure that they will not be damaged by its operations.

Substitute the following for the last paragraph:

Prior to starting construction, the Contractor shall be responsible to determine the location and depth of all utilities which have been marked by the respective owners and which may affect or be affected by its operations. The Contractor also shall determine the location and depth of each service connection, whether or not marked. Full compensation for such work shall be considered as included in the prices bid for other items or work. If a utility which was marked or a service connection is found to interfere with the work after construction has commenced, the Contractor

shall be solely responsible for all costs of any delay and for any costs which could have been avoided if the Contractor had located the utility prior to start of construction.

5-2 PROTECTION. Add the following:

If, in the course of construction, the Contractor damages a sewer lateral or water lateral, the Contractor shall be responsible to completely expose said lateral from the main line to the point of connection at private property to verify integrity of all joints to the satisfaction of the Engineer. This shall not be considered to be extra work and no extra costs shall be allowed therefor.

Sewers, including lateral repairs, shall be constructed of Vitrified Clay Pipe, unless otherwise approved in writing by the Engineer.

Add the following after the final paragraph:

As noted in subsections 5-2.1, 5-2.2 and 5-2.3 utilities are classified and are to be handled in one of three ways by the Contractor in the course of performing the contract.

Add the following subsections:

5-2.1 Noninterfering Utilities

Utilities that are not abandoned by the owner and do not physically interfere with the permanent work in its final location shall be supported, protected and maintained in place by the Contractor, and the Contractor shall be solely responsible for any damage, loss or injury, or death resulting from his/her failure to do so and the Contractor shall indemnify and hold harmless the City from any and all such consequences. Noninterfering utilities may, with the permission of the owner and the Public Works Director, be relocated still farther from the permanent work in its final locations, but the Contractor shall not so consider, in submitting his bid, unless the relocation is shown on the plans.

5-2.2 Abandoned Utilities

Abandoned utilities are those portions of any utility which are no longer needed or desired by the owner and whose destruction is consented to by the owner and/or is permitted by notation on the plans. Abandoned utilities which physically interfere with the permanent work or with the construction thereof shall be removed by the Contractor and the Contractor shall be solely responsible for any damage, loss or injury, or death resulting from the removal and the Contractor shall indemnify and hold harmless the City from any and all such consequences.

5-2.3 Interfering Utilities

Any utility shall be deemed an interfering utility (1) which physically occupies any part of the space to be occupied by the permanent work in its final locations, or (2) whose length within the theoretical width of excavation for the permanent work exceeds five times the width of said theoretical excavation whether or not the utility physically interferes with the permanent work. Interfering utilities that are not abandoned by the owner shall be relocated so as not to interfere with the permanent work in its final location. Such relocation will be performed by the owner or the City unless otherwise shown on the plans.

The Contractor shall exercise caution to prevent damage to or movement of the utilities while constructing the permanent work along and adjacent to the utilities.

5-2.4 Protection of Underground Hazardous Utilities. This Subsection shall apply to projects where there are underground utilities within the Work area which may be potentially hazardous if damaged. A hazardous substance shall be defined as one having the potential for an immediate disaster such as, but not limited to, gasoline, electricity, fuel oil, butane, propane, natural gas, chlorine or other chemicals.

Abandoned or inoperative utilities designed to carry hazardous substances and unidentified or unknown utilities shall be considered hazardous until determined otherwise. Whenever the Contractor is directed by the Engineer to tap these lines, the Contractor shall provide personnel specialized in this work and payment therefore will be considered as extra work per 3-3 of these Special Provisions.

The Contractor shall comply with the following requirements when working around underground hazardous utilities:

1) The Contractor shall not trench or excavate within the area where a utility known to carry a hazardous substance exists until its location has been determined by excavation or other proven methods acceptable to the Engineer. The intervals between exploratory excavations or location points shall be sufficient to determine the exact location of the line. Unless otherwise directed by the Engineer, excavation for underground hazardous utilities shall be performed by the Contractor and paid for as specified per 5-1 of these Special Provisions.

2) If it is determined that the horizontal or vertical clearance between the utility known to carry hazardous substances and the construction limit is less than 300 mm (12 inches) (450mm (18 inches) if scarifying), the Contractor shall confer with its owner. Unless the owner elects to relocate the line or take it out of service, the Contractor shall not excavate until the line has been completely exposed within the limits of construction.

3) Once the physical location of the utility known to carry hazardous substances has been determined, the Contractor, in cooperation with and with the concurrence of the utility owner, shall determine how to protect and/or support the utility from damage before proceeding with the Work.

4) During all excavation and trenching operations, the Contractor shall exercise extreme caution and protect the utilities from damage.

5) The Contractor shall notify the Engineer, the public agency maintaining records for the jurisdiction in which the Project is located and the owner, if known, whenever previously unidentified or unknown underground utilities are encountered so that the location can be accurately established and made a part of permanent substructure records.

Full compensation for protecting underground hazardous utilities as specified or noted on the Plans shall be considered as included in the prices bid for the various items of work.

5-3 REMOVAL.

Add the following:

It shall be the Contractor's responsibility irrespective of the notations on the plans to confirm or determine that a utility is to be abandoned before treating the same as an abandoned utility and shall assume all risks in so determining.

5-5 DELAYS.

Substitute the following:

If the contractor while performing the contract discovers utility facilities not identified by the public agency in the contract plans or specifications, he shall immediately notify the City and utility in writing. The Contractor shall not be entitled to damage or additional payment, nor shall it be entitled to standby time for labor if a delay does occur. The Contractor also shall not be entitled to damage or additional payment for equipment not on the project during the occurrence of the event that caused the related delay. The Engineer will determine the extent of the delay attributable to such interferences, the affect of the delay on the project as a whole, and any commensurate extension of time.

Any failure of the City and/or utility company to accomplish relocations in a reasonable manner in light of the Contractor's operations (to the extent such operations would otherwise be feasible and in accordance with the contract and as disclosed to the City prior to the Contractor encountering any such utility) shall entitle the Contractor to an extension of contract time to the extent that, in the judgment of the Engineer, the Contractor's completion of the overall contract work has been delayed; however, the Contractor shall be entitled to no other remedy and, in submitting its bid, thereby waives such other remedies, if any, unless the relocation delay is the result of arbitrary, capricious or malicious conduct by the City.

SECTION 6 - PROSECUTION, PROGRESS AND ACCEPTANCE OF THE WORK

6-1 CONSTRUCTION SCHEDULE AND COMMENCEMENT OF WORK.

6-1.1 Construction Schedule. Replace the entire subsection with the following:

Working days for this contract are on Monday, Wednesday, Thursday, and Friday only unless prior approval is obtained by the Engineer.

Within ten (10) working days after the date of the CITY's execution of the Contract, the Contractor shall submit a proposed construction schedule to the Engineer for approval. The schedule shall be in accordance with 6-1.3 and 6-1.4 and shall be in sufficient detail to show chronological relationship of all activities of the Work. These include, but are not limited to: estimated starting and completion dates of various activities, submittal of shop drawings to the Engineer for approval, procurement of materials and scheduling of equipment.

Prior to issuing the Notice to Proceed, the Engineer will schedule a Pre-Construction Meeting with the Contractor to review the proposed construction schedule and delivery dates, arrange utility coordination and clarify inspection procedures.

An Administrative Notice to Proceed may be given, at the City's option, to allow the contractor to begin some of the contract work. Contractor access to the site may or may not be given with the Administrative Notice to Proceed. The duration of time between the Administrative Notice to Proceed and Full Notice to Proceed shall not be included in the required contract duration.

Notwithstanding any other provisions of the Contract, the Contractor shall not be obligated to perform any work and the CITY shall not be obligated to accept or pay for any work performed by the Contractor prior to delivery of a Notice to Proceed. The CITY's knowledge of work being performed prior to delivery of the Notice to Proceed shall not obligate the CITY to accept or pay for such work. The Contractor shall provide all required Contract bonds and evidences of insurance prior to commencing work at the site.

6-1.2 Commencement of the Work. Delete the subsection in its entirety**.** Add the following subsections:

6-1.3 Criteria. The construction schedule shall conform to the following criteria:

1) The schedule shall be prepared using the latest version of Primavera, Microsoft Project or approved equal.

2) Work activities shall be based on the items of work per 2-6, and the following:

   a) Contract Unit Price items shall be subdivided into those portions to be constructed during each stage or phase of construction.

   b) Lump sum items shall be subdivided into those portions to be constructed during each stage or phase of construction.

3) Utility relocations in coordination with the Contractor per 5-4 of these Special Provisions shall be considered as activities.

4) Required submittals, working and shop drawings shall be included as activities.

5) The procurement of construction materials and equipment with long lead times for deliveries shall be included as activities.

6) Work to be performed by subcontractors shall be identified and shown as work activities.

7) Start and completion dates of each activity shall be illustrated.

8) Completion of all Work under the Contract shall be within the time specified in 6-7 of these Special Provisions and in accordance with the Plans and Specifications.

6-1.4 Requirements. In preparing the construction schedule, the following items shall be considered:

Sequence of Construction - The Contractor shall sequence the Work in a manner to expeditiously complete the project with a minimum of inconvenience to the adjacent owners and to conform to the following:

1. The Contractor may not begin any pavement reconstruction activities until it has completed the installation of all new PCC improvements.

2. Concrete removal - All concrete removed shall be hauled off the Work site (including the Contractor's storage yard) no later than the calendar day following the day that the removal is performed. If the calendar day following the removal is a non-working day (Saturday, etc.) the concrete shall be hauled off the Work site on the same day it was removed. Unless otherwise authorized by the Engineer, failure by the Contractor to haul concrete from the Work site and/or Contractor's storage yard(s) in a timely manner may result in a liquidated damage assessed upon the Contractor. Such liquidated damage shall be determined by the Engineer and will be deducted, accordingly, from a Progress Payment due to the Contractor.

3. PCC construction - Construction of PCC footings shall be formed and poured within 5 working days following removal of the existing material at any location. Any adjacent trench (i.e. 1-foot wide slot trench), required to remove and construct said PCC construction shall be restored per these Specifications and no later than 2 calendar days following the PCC construction. Failure by the Contractor to comply with these requirements in a timely manner may result in a liquidated damage assessed upon the Contractor. Such liquidated damage shall be determined by the Engineer and will be deducted, accordingly, from a Progress Payment due to the Contractor.

4. Pavement removal - All pavement removed as a result of trenching shall be hauled off the Work site no later than the same day that the removal is performed.

5. **All Work shall only be performed between the hours of 7:00 a.m. and 3:30 p.m., Monday, Wednesday, Thursday and Friday unless unless prior approval is obtained by the Engineer.**

6. A move-in period of 10 calendar days will be allowed starting on the date in the Notice to Proceed.

7. Holiday Moratorium per 7-10.2.8 of these Special Provisions.

8. Stockpile area. Schedule shall indicate date for cleanup of stockpile area.

Should the Contractor fail to meet these requirements, the Engineer reserves the right to prohibit the Contractor from making further removals until the clean up or construction is in conformance with the aforementioned requirements. Furthermore, if after notice is given to the Contractor to perform work to meet these requirements, and the Contractor refuses or for any reason fails to perform sufficiently to meet these schedules, CITY may perform said work and charge the Contractor for all costs incurred.

6-1.5 Updates. The Contractor shall submit 2 paper copies of the updated construction schedule to the Engineer on the first working day of each month.

If the Contractor decides to make a major change in the method of operations after commencing construction, or if the schedule fails to reflect the actual progress, the Contractor shall submit to the Engineer a revised construction schedule in advance of beginning revised operations.

Full compensation for complying with all requirements of Section 6-1.5 Updates shall be per the Contract Unit Price for “MOBILIZATION”. If the Contractor fails to submit an updated Construction Schedule to the Engineer on the first working day of each month, the CITY will deduct one-fifth the amount of the Contract Unit Price for each work day after the due date, up to maximum of $300, that each monthly schedule update is not submitted.

6-7 TIME OF COMPLETION.

6-7.1 General. Replace the first sentence with the following:

Time shall be of the essence in the Contract. The Contractor shall begin Work after the mailing by the Engineer to the Contractor, first class mail, postage prepaid, a Notice to Proceed and shall diligently prosecute the same to completion within **45 working days** from the start date specified in the Notice to Proceed.

6-8 COMPLETION, ACCEPTANCE AND WARRANTY.

6-8.1 Completion. Replace the entire subsection with the following:

If, in the Engineer's judgment, the Work has been completed and is ready for acceptance, the Engineer will so certify and will determine the date when the Work was completed. This will be the date when the Contractor is relieved from responsibility to protect the Work. The Engineer may cause a Notice of Completion to be filed and recorded with the Los Angeles County Recorder's Office. At the Engineer's option, the Engineer may certify acceptance to the City Council who may then cause a Notice of Completion to be filed and recorded with the Los Angeles County Recorder's Office.

6-8.3 Warranty. Add the following subsection:

6-8.3.1 Manufacturer's Warranties. Manufacturer's warranties shall not relieve the Contractor of liability under these Specifications. Such warranties only shall supplement the Contractor's responsibility. The Engineer may, at his option, require a manufacturer's warranty on any product offered for use.

6-9 LIQUIDATED DAMAGES. In each of the two paragraphs, substitute "$500 in place of "$250" as the amount of the liquidated damages per each consecutive calendar day.

Add the following section:

6-11 SEQUENCE OF CONSTRUCTION

6-11.1 Multiple Headings. In order to meet the contract schedule, the Contractor will be allowed to initiate and maintain two or more construction headings. However, the Contractor will not be allowed to have multiple phases of work occurring that have the corresponding traffic control devices in conflict with each other.

SECTION 7 - RESPONSIBILITIES OF THE CONTRACTOR

7-2 LABOR

7-2.3 Payroll Records. Add the following:

Any payroll and payroll records required for this project shall be submitted, for each week in which any contract work is performed, to the Engineer. A retention of $5,000 per report per pay period will be withheld from a progress payment for a late or missing report. A report shall be deemed as late or missing when not submitted to the Engineer within 10 calendar days from the close of the pay period for which the report applies. In addition, a <u>non-refundable</u> deduction of $100 per report per day will be deducted from payments due the Contractor for each late or missing report. The $100 non-refundable deduction per day will be incurred beginning on the first day the report is late or missing.

Add the following subsections:

7-2.5 Subcontractor and DBE Records

At the completion of the contract if the Contractor does not submit its Subcontractor and DBE Records to the Engineer a retention in the amount of $10,000 per record will be withheld from a progress payment for a late or missing record. A record shall be deemed as late or missing when not submitted to the Engineer within 15 calendar days from the completion of the contract. In

addition, a non-refundable deduction of $300 per record per day will be deducted from payments due the Contractor for each late or missing record. The $300 non-refundable deduction per day will be incurred beginning on the first day the record is late or missing.

7-2.6 Department of Industrial Relations' monitoring and enforcement of prevailing wage laws

California Labor Code:

```
   1771.1.  (a) A contractor or subcontractor shall not be qualified to
bid on, be listed in a bid proposal, subject to the requirements of
Section 4104 of the Public Contract Code, or engage in the
performance of any contract for public work, as defined in this
chapter, unless currently registered and qualified to perform public
work pursuant to Section 1725.5. It is not a violation of this
section for an unregistered contractor to submit a bid that is
authorized by Section 7029.1 of the Business and Professions Code or
by Section 10164 or 20103.5 of the Public Contract Code, provided the
contractor is registered to perform public work pursuant to Section
1725.5 at the time the contract is awarded.
```

SB 854 amended the Labor Code to require all contractors bidding on public work to register with the Department of Industrial Relations (DIR) and to pay an annual fee. The registration requires contractors to provide the State with evidence of the contractors' compliance with a number of statutory requirements. The registration requirement took effect on July 1, 2014 to fund the Department of Industrial Relations' monitoring and enforcement of prevailing wage laws. The registration period is open now, and contractors and subcontractors wishing to work on a public works project must be registered by March 1, 2015. For public agencies/awarding bodies, the new law requires that all public works projects with bids due after March 1, 2015, or awarded on or after April 1, 2015, use only registered contractors and subcontractors. The bill also requires awarding bodies to include notice of the registration requirement in their bid invitations and bid documents. In addition, public agencies must also file notice of their public works projects using DIR approved forms.

Registration is completed through an online application and requires a non-refundable $300 fee to be paid by the contractors and subcontractors. The registration process requires contractors to:

- provide workers' compensation coverage to its employees
- hold a valid Contractors State License Board license
- have no delinquent unpaid wage or penalty assessments
- not be subject to federal or state debarment

Contractors must pay an annual renewal fee by July 1 of each year. The registration form is located on the DIR's website at http://www.dir.ca.gov/DLSE/dlsepublicworks.html.

To help awarding bodies and contractors comply with the new requirements, the DIR will post a database of registered contractors and subcontractors on its website. While non-registered contractors may not be awarded public works contracts after the effective date, inadvertently listing an unregistered subcontractor on a bid will not necessarily invalidate that bid. In addition, the registration requirement does not apply to private jobs that are determined to be public works after the contract has been awarded.

The City is required to provide notice of award to the DIR on all projects. Said notice is by an online application and within five (5) days of project award. The online application is at: https://www.dir.ca.gov/pwc100ext/

7-3 INSURANCE.

7-3.2 General Liability Insurance. Replace the second sentence of the second paragraph with the following:

The Contractor must maintain at its sole expense the following insurance, which will be full coverage not subject to self-insurance provisions:

1) Automobile Liability, including owned, non-owned and hired vehicles, with at least the following limits of liability:

   a). Combined single limits of $2,000,000 per occurrence.

2) General Liability including coverage for premises, products and completed operations, independent contractors, personal injury and contractual obligations with combined single limits of coverage of at least $3,000,000 per occurrence, with an annual aggregate of no less than $5,000,000.

Add the following:

The Contractor must include all subcontractors as insureds under its policies or must furnish separate certificates and endorsements for each subcontractor.

7-3.3 Worker's Compensation Insurance. Add the following after the fourth paragraph:

Worker's Compensation Insurance shall be with limits as required by the State of California and Employer's Liability with limits of at least $1,000,000.

7-3.4 Auto Liability Insurance Delete subsection in its entirety**.**

7-5 PERMITS. Replace the second paragraph with the following:

The Contractor shall obtain a City of Torrance Business License and a no-fee Construction Excavation Permit before commencing construction. The Contractor shall obtain no-fee Electrical and Plumbing permits from the Building and Safety Department before commencing installation of new electrical services or on-site irrigation systems, as applicable.

Full compensation for complying with the above requirements shall be considered as included in the prices bid for the appropriate items of work.

7-6 THE CONTRACTOR'S REPRESENTATIVE

Add a third paragraph to the section stating the following:

The Contractor's Representative shall be approved by the CITY prior to the start of the Work. If the designated representative is rejected, the Contractor shall immediately designate another representative in writing and submit to the City for consideration. The CITY shall have the authority to require the Contractor to remove its representative and/or alternate representative at any time and at no cost to the CITY.

7-8 WORK SITE MAINTENANCE.

7-8.1 General. The second paragraph is amended to read:

Unless directed otherwise by the Engineer, the Contractor shall furnish and operate a self-loading motor sweeper with spray nozzles at least once each working day to keep paved areas acceptably clean to the City whenever construction, including restoration, is incomplete.

7-8.6 Water Pollution Control.

7-8.6.2 Best Management Practices (BMPs). Replace the entire subsection with the following:

Best Management Practices shall be defined as any program, technology, process, siting criteria, operating method, measure, or device which controls, prevents, removes, or reduces pollution. The Contractor shall obtain and refer to the California Stormwater Quality Association's: Stormwater Best Management Practice Handbook Portal: Construction. The publication is available from CASQA.

The Contractor shall have a minimum of two (2) readily accessible copies of each publication on the Work site at all times. The Contractor shall implement BMPs in conjunction with the following construction operation and activities:

CONSTRUCTION PRACTICES	Clearing, Grading and Excavating
	Water Conservation Practices
	Dewatering
	Paving Operations
	Structure Construction and Painting
MATERIAL MANAGEMENT	Material Delivery and Storage
	Material Use
	Spill Prevention and Control
WASTE MANAGEMENT	Solid Waste Management

	Hazardous Waste Management
	Contaminated Soil Management
	Concrete Waste Management
	Sanitary/Septic Waste Management
VEHICLE AND EQUIPMENT MANAGEMENT	Vehicle and Equipment Cleaning
	Vehicle and Equipment Fueling
	Vehicle and Equipment Maintenance

The Contractor shall implement the following BMPs in conjunction with the previously listed construction operation activities:

VEGETATIVE STABILIZATION	Scheduling of Planting
	Preservation of Existing Vegetation
	Temporary Seeding and Planting
	Mulching
PHYSICAL STABILIZATION	Geotextiles and Mats
	Soil Stabilizer/Dust Control
	Temporary Stream Crossing
	Stabilized Construction Roadway
	Stabilized Construction Entrance
RUNOFF DIVERSION	Sodding, Grass Plugging, and Vegetative Buffer strips
	Earth Dikes, Drainage Swales, and Lined Ditches
	Top and Toe of Slope Diversion Ditches/Berms
	Slope Drains and Subsurface Drains

VELOCITY REDUCTION	Flared Culvert End Sections
	Outlet Prottection/Velocity Dissipation Devices
	Check Dams
	Slope Roughening/Terracing/Rounding
SEDIMENT TRAPPING	Slit Fences
	Straw Bale Barrier
	Sand Bag Barrier
	Brush or Rock Filter
	Storm Drain Inlet Protection
	Sediment Traps
	Sediment Basin

Additional BMPs may be required as a result of a change in actual field conditions, contractor activities, or construction operations. When more than one BMP is listed under each specific BMP category, the Contractor shall select the appropriate and necessary number of BMPs within each category in order to achieve the BMP objective.

BMPs for contractor activities shall be continuously implemented throughout the year. BMPs for erosion control and sedimentation shall be implemented during the period from October 15 to April 15, and whenever the National Weather Service predicts rain within 24 hours. BMPs for erosion control and sedimentation shall also be implemented prior to the commencement of any

contractor activity or construction operation that may produce run-off, and whenever run-off from other sources may occur.

The CITY, as a permittee, is subject to enforcement actions by the State Water Resources Control Board, the Environmental Protection Agency and private citizens. The CITY may assess the Contractor a penalty of $1,000 for each calendar day that the Contractor has not fully implemented the appropriate BMPs and/or is otherwise in noncompliance with these provisions. In addition, the CITY will deduct, from the final payment due the Contractor, the total amount of any fines levied on the CITY, plus legal and staff costs, as a result of the Contractor's lack of compliance with these provisions and/or less than complete implementation of the appropriate BMPs.

Full compensation for the implementation of BMPs, including the construction, removal, and the furnishing of all necessary labor, equipment, and materials, shall be considered as included in the price bid for the appropriate items of work.

7-8.6.5 Payment. Delete this subsection in its entirety.

Add the following subsections:

7-8.7 Temporary Light, Power, and Water. Add the following:

The Contractor shall furnish, install, maintain, and remove all temporary light, power, and water at its own expense. These include piping, wiring, lamps and other equipment necessary for the Work. The Contractor shall not draw water from any fire hydrant (except to extinguish a fire), without obtaining permission from the water agency concerned.

The Contractor shall obtain a construction water meter from the CITY by calling Global Water at 855-354-5623. A $1,000 deposit is required and refundable upon return of the meter in good working condition. The Contractor shall pay for the water used, at the CITY's current water rates.

Some water mains in Torrance are owned/operated by California Water Service. For rental of a hydrant meter the contractor shall call California Water Service at (310) 257-1400.

7-8.8 Contractor's Storage Yard. The Contractor shall be responsible for obtaining a storage yard for the duration of the Work. If the proposed location of the yard is located within the boundaries of the CITY, the Contractor shall obtain prior approval from the Engineer.

7-8.9 Graffiti Removal. The Contractor shall maintain the Work, all of its equipment, and all traffic control devices, including signage, free of graffiti throughout the duration of the Contract. The Contractor shall respond to any request from the Engineer to remove graffiti within 4 hours of notification. Should the Contractor fail to respond to such request, the CITY reserves the right to make other arrangements for the requested graffiti removal and deduct the cost from any monies due the Contractor.

7-9 PROTECTION AND RESTORATION OF EXISTING IMPROVEMENTS.

Add the following paragraphs:

The Contractor shall be responsible to protect all new concrete work from being etched, scratched or otherwise marked or having wet slough material deposited thereon. If new concrete

work is marked, the Contractor shall replace it at its expense in accordance with 303-5.7 of these special provisions.

The Contractor shall perform all private lawn, hardscape, and parkway restorations, (not included in the project plans) including restoration of irrigation systems and existing curb drains within five (5) days after the adjacent improvements have been constructed at his own expense. The Contractor shall not delay restorations for tree plantings.

Add the following subsections:

7-10 PUBLIC CONVENIENCE AND SAFETY

7-10.1 Access.

7-10.1.2 Vehicular Access Replace the entire subsection with the following

The Contractor's operations shall cause no unnecessary inconvenience. The access rights for the public shall be considered at all times. Unless otherwise authorized, traffic shall be permitted to pass through the Work, or an approved detour shall be provided.

Safe and adequate vehicular access shall be provided and maintained to: fire hydrants; commercial and industrial establishments; churches, schools and parking lots; service stations and motels; hospitals; police and fire stations; and establishment of similar nature. Access to these facilities shall be continuous and unobstructed unless otherwise approved by the Engineer.

Vehicular access to residential driveways shall be maintained to the property line except when necessary construction precludes such access. When the Contractor begins excavation of a residential driveway, safe access shall be provided within 4 hours and not later than the end of the same workday in which excavation began.

Unless otherwise authorized, work shall be performed in only one-half the roadway at one time. One half shall be kept open and unobstructed until the opposite side is ready for use. If one-half a street only is being improved, the other half shall be conditioned and maintained as a detour.

The Contractor shall provide the necessary measures to prevent public access to private residences during removal and replacement of existing barrier structures, such as wood and chain link fences, during non-working hours.

The Contractor shall be responsible to provide at least 48 hours written notice to each affected property before closing or partially closing any driveway or pedestrian access.

Unless the Contractor makes other arrangements satisfactory to the owners, the Contractor shall provide and maintain safe, adequate vehicular access to places of business and public gathering as stated herein below:

(a) For each establishment (such as, but not limited to, gas stations, markets, and other "drive-in" business) on the corner of an intersection, which has a driveway (or driveways) on each intersecting street, the Contractor shall provide vehicular access to at least one driveway on each intersecting street insofar as the access is affected by the Contractor's operations.

(b) For each establishment (such as, but not limited to, motels, parking lots and garages) which has a one-way traffic pattern with the appropriate entrance

driveway and exit driveway, the Contractor shall provide vehicular access to the entrance driveway and the exit driveway insofar as the access is affected by the Contractor's operations.

(c) The Contractor shall provide vehicular access to all schools and parking lots including, but not limited to, apartment building parking lots.

(d) The Contractor shall provide vehicular access to all establishments requiring such access for receiving or delivering materials or supplies and for delivery of mail.

(e) The Contractor shall make every reasonable effort to provide maximum access to churches on their Sabbath days. In addition, the Contractor shall not park or store equipment at the site of a church on its Sabbath days.

(f) At least three (3) days prior to starting work in any location, the Contractor shall distribute written notices to all homeowners and residents that will be impacted by the work. The City will provide the notice.

(g) The Contractor shall provide a minimum 1-inch thick temporary asphalt surface for an access ramp or sidewalk if it is not able to install the permanent improvement within 5 working days following the removal of the existing material at any location. The offset at any transverse or longitudinal joint shall not be more than one-half (1/2) inch. On the temporary asphalt surface: the running slope shall not exceed 1:20; the cross slope shall not exceed 1:50. The Contractor shall not be allowed any additional compensation for the installation and removal of temporary asphalt.

(h) The Contractor shall protect the work from traffic. Should the slurry seal be damaged, the Contractor shall provide satisfactory repairs at no cost to the City.

Should any change in these requirements be necessitated by extraordinary occurrences or requirements during the execution of the Work, the Contractor shall obtain prior written approval of the Engineer.

All costs for the above requirements shall be considered as included in the prices bid for the various items of work.

7-10.1.3 Pedestrian Access. Replace the entire subsection with the following:

The Contractor's operations shall cause no unnecessary inconvenience. The access rights for the public shall be considered at all times, unless otherwise approved by the Engineer.

Safe and adequate pedestrian access shall be provided and maintained to: fire hydrants; commercial and industrial establishments; churches, schools and parking lots; service stations and motels; hospitals; police and fire stations; and establishment of similar nature. Access to these facilities shall be continuous and unobstructed unless otherwise approved by the Engineer.

Safe and adequate pedestrian zones and public transportation stops, as well as pedestrian crossings of the Work at intervals not exceeding 300 feet, shall be maintained unless otherwise approved by the Engineer.

All costs for the above requirements shall be considered as included in the prices bid for the various items of work.

7-10.2 Work Area Traffic Control

7-10.2.1 General. Delete subsection in its entirety.

Add the following subsections:

7-10.2.4 Minimum Requirements for Maintaining Traffic Flow. The Contractor shall observe the following minimum requirements:

a) Unless otherwise shown on the Traffic Control Plans, permitted by this Contract or authorized by the Engineer, all roadways, driveways, travel and turning lanes, sidewalks and access ramps shall remain open at all times.

b) The Contractor shall provide adequate steel plating to cover and protect a newly poured PCC cross gutter with spandrels and integral curb in order to allow traffic flow and not close a street. A minimum lane width of 14 feet shall be provided over the steel plating.

c) At a minimum, the Contractor shall maintain one (1) ten (10) foot-wide lane open in each direction between the hours of 7:00 a.m. and 3:30 p.m. All travel lanes shall be kept open all other times.

d) Any travel lane adjacent to the curb and within the work zone shall be, at a minimum, a twelve (12) foot-wide lane.

e) Reduction in lane requirements may be afforded only with prior written approval from the Engineer.

f) Traffic signs, flaggers, warning devices, safety traffic devices and, on select streets, electronic arrow boards for diverting and directing traffic shall be furnished, installed and maintained by the Contractor throughout the project.

g) The Contractor must provide access through the work zone in non-working hours by means of temporary ramps. Open trenches shall either be covered by steel plates, or ramped with crushed miscellaneous base. No drop-off at either transverse or longitudinal joints shall be allowed at any time. Temporary ramps, including those for driveway access, shall be constructed with either crushed miscellaneous base or

temporary asphalt, as appropriate, with a minimum of 1" to 12" slope in both longitudinal and transverse directions.

All costs for the above requirements shall be considered as included in the prices bid for the various items of work.

7-10.2.7 Temporary "No Parking" Signs. The Contractor is responsible to post "Temporary No Parking" signs at least forty-eight (48) hours in advance of the first date of work and the required enforcement. If work is to begin on either a Monday, the Contractor shall post the signs on a Friday. Each sign must include text indicating the beginning and end dates and the hours in effect. "Tow-Away" and "No Parking" must be shown on each sign face. If it is required to temporarily restrict parking 24 hours/day then "Tow-Away" and "No Parking Anytime" must be shown on each sign face. The signs shall be mounted on either 1" x 2" X 3' high wood stakes, Type II barricades, or 39-inch high delineators. Signs shall be spaced at approximately 100' intervals on the effected side(s) of the street. Signs shall not be posted on trees, traffic signal poles, utility poles, street lights, or any other street furniture.

Signs shall be professionally made of moisture-resistant, heavy duty cardboard or other approved material. All signs shall be maintained by the Contractor and kept free of graffiti. Any sign that becomes illegible or is removed shall be replaced within twenty-four (24) hours. The Contractor shall only be permitted to restrict parking for the minimum time necessary to complete on-going work. The Contractor shall be responsible to remove and repost "Temporary No Parking" signs when work will be delayed for more than five (5) consecutive days, or if the work must go beyond the end date shown on the signs, or otherwise directed by the Engineer.

The Contractor shall obtain approval for the signs and the placement thereof from the Engineer. Immediately after this approval and posting, the Contractor shall notify Torrance Police Department, Traffic Division, at (310) 618-5557 for review and enforcement. The parking restriction cannot be enforced until the signs have been in place 48 hours and the Police notified.

The Contractor shall maintain said signs through the day of work, and shall remove all of said signs on or within one (1) calendar day of the completion of work within the restricted parking area.

If, in the event a street scheduled for slurry or cape sealing was missed, the Contractor shall immediately remove all "No Parking" signs and notify all residents and others previously notified, with printed notices, that due to unforeseen circumstances, the Contractor was not able to seal the street as previously notified, that the street will be rescheduled in approximately 1 to 2 weeks, and that they will be re-notified. The Contractor shall, on the job site prior to the start of each day's work, have an adequate supply of approved letters of notification to residents for missed streets.

All costs for the above requirements shall be considered as included in the prices bid for the various items of work.

7-10.2.8 Holiday Moratorium. No reduction in lane widths on any major street shall be permitted during the CITY's holiday period construction moratorium, which begins on the Monday prior to Thanksgiving and ends on the Friday following New Year's Day. No traffic signal shall be out of operation for any period of time during said moratorium.

7-10.2.9 Refuse Collection. Refuse collection days are established and will not be changed. Consult the Engineer regarding the refuse collection schedule. The Contractor shall ensure streets and alleys affected by the work are accessible to the CITY's automated trash trucks on designated pick up days. In alleys, Contractor shall be responsible to provide and maintain access to large trash containers during the course of the work.

7-10.2.10 Protection of Permanent Pavement Markings, Manholes, Valves. The Contractor shall, in areas outside of the work zone, protect existing raised pavement markers, thermoplastic legends and markings. The Contractor shall cover and protect existing valve and manhole covers, utility caps, and similar items from damage.

The contractor shall be responsible for replacing or restoring any damaged items to the satisfaction of the Engineer.

All costs for the above requirements shall be considered as included in the prices bid for the various items of work.

SECTION 9 - MEASUREMENT AND PAYMENT

9-1 MEASUREMENT OF QUANTITIES FOR UNIT PRICE WORK.

9-1.2 Methods of Measurement. Add the following subsections:

9-1.2.1 Payment for Labor and Materials.

The Contractor shall pay and cause the subcontractors to pay any and all accounts for labor, including Worker's Compensation premiums, State Unemployment and Federal Social Security payments and all other wage and salary deductions required by law. The Contractor also shall pay and cause the subcontractors to pay any and all accounts for services, equipment and materials used by it and the subcontractors during the performance of work under this contract. All such accounts shall be paid as they become due and payable. If requested by the Engineer, the Contractor shall immediately furnish the City with proof of payment of such accounts.

9-1.2.2 Measurement and Payment

Payment of each item will include full compensation for furnishing all labor, materials, tools, equipment and backup equipment; transportation and technical competence for performing all work necessary to complete each item as indicated on the plans and as specified in these Contract Documents, including but not limited to obtaining all applicable certifications necessary for specialty personnel and major equipment in conformance with Subsection 7-5, and all other applicable permits; securing a storage yard to store all equipment and materials to be used on the job, disposal of waste materials, restoration of the site, etc. The storage yard may also be used as a temporary storage for excavated materials, and traffic control items. Costs for mobilization/demobilization shall be included in the unit price bid for MOBILIZATION.

9-2 LUMP SUM WORK. Replace the second paragraph with the following:

The Contractor shall, within five (5) working days of receipt of a request from the Engineer, submit a complete breakdown of lump sum bid prices showing the value assigned to each part of the work, including an allowance for profit and overhead. In submitting the breakdown, the Contractor certifies that it is not unbalanced and that the value assigned to each part of the work represents its estimate of the actual cost, including profit and overhead, of performing that part of the work. The breakdown shall be sufficiently detailed to permit its use by the Engineer as one of the bases for evaluating requests for payment. No extra costs shall be allowed for providing these breakdowns.

9-3 PAYMENT.

9-3.2 Partial and Final Payment. Replace the third paragraph with the following:

For each progress estimate, 5 percent will be deducted and retained by the CITY, and the remainder less the amount of all previous payments will be paid. In addition, 125% of the amount of unreleased “STOP” Notices will be withheld.

Add the following:

The Contractor shall submit all requests for payment on a Progress Payment Invoice.

Prior to submittal of said invoice, all items for which payment is requested shall be checked and approved in writing by the Engineer. No payments will be made unless all back-up data is submitted with the payment request and the Progress Payment Invoice is signed by both Contractor and Engineer.

9-3.4 Mobilization. Replace the entire subsection with the following:

Mobilization shall include the provisions of the Construction Schedule, Best Management Practices and Storm Water Pollution Prevention Plan; Sewage Spillage Prevention; Emergency Response Plan; site review; obtaining all permits, insurance, and bonds; moving onto the site all plant and equipment; furnishing and erecting plants, temporary buildings, and other construction facilities, and removal of same at completion of the Work; and other work, all as required for the proper performance and completion of the Work.

Mobilization shall include, but not be limited to, the following items:

(a) Submittal and modification, as required, of the Construction Schedule.

(b) Moving on to the site of all Contractor's plant and equipment required for the first month's operations.

(c) Installing temporary construction power and wiring.

(d) Establishing fire protection system.

(e) Developing construction water supply.

(f) Providing on-site sanitary facilities and portable water facilities, as required.

(g) Arranging for and erection of Contractor's work and storage yard.

(h) Submittal of all required insurance certificates and bonds, including subcontractors.

(i) Obtaining all required permits.

(j) Posting all OSHA required notices and establishment of safety programs.

(k) Potholing and other research and review as necessary to verify site conditions and utility locations

(l) Having the Contractor's Superintendent present at the job site full-time.

(m) Removal (including all spray-painted markings on any surface), cleanup, and restoration

Add the following subsection:

9-3.5 Noncompliance with Plans and Specifications.

Failure of the Contractor to comply with any requirement of the Plans and Specifications, and/or to immediately remedy any such noncompliance upon notice from the Engineer, may result in suspension of Contract Progress Payments. Any Progress Payments so suspended shall remain in suspension until the Contractor's operations and/or submittals are brought into compliance to the satisfaction of the Engineer. No additional compensation shall be allowed as a result of suspension of Progress Payments due to noncompliance with the plans or specifications. The Contractor shall not be permitted to stop work due to said suspension of Progress Payments.

Add the following section:

9-4 CLAIMS.

The Contractor shall not be entitled to the payment of any additional compensation for any cause, including any act, or failure to act, by the CITY, or the happening of any event, thing or occurrence, unless the Contractor shall have given the CITY due written notice of potential claim as hereinafter specified.

The written notice of potential claim shall set forth the reasons for which the Contractor believes additional compensation will or may be due, the nature of the costs involved, and, insofar as possible, the amount of the potential claim. Said notice shall be submitted on a form approved by the CITY at least forty-eight (48) hours (two working days) in advance of performing said work, unless the work is of an emergency nature, in which case the Contractor shall notify and obtain approval from the Engineer prior to commencing the work. The Engineer may require the Contractor to delay construction involving the claim, but no other work shall be delayed, and the Contractor shall not be allowed additional costs for any said delay but may be allowed an extension of time if the Engineer agrees that the work delayed is a controlling element of the Construction Schedule. The Contractor shall be required to submit any supporting data (or a detailed written explanation justifying further delay) within five (5) work days of a request from the Engineer and shall be responsible for all costs associated with any delays resulting from late and/or incomplete submittals. By submitting a Bid, the Contractor hereby agrees that this subsection shall supersede 6-6.3 and 6-6.4 of the Standard Specifications.

It is the intention of this subsection that differences between the parties arising under and by virtue of the Contract be brought to the attention of the Engineer at the earliest possible time in order that such matters may be settled, if possible, or other appropriate action promptly taken. The Contractor hereby agrees that it shall have no right to additional compensation for any claim that may be based on any such act, failure to act, event, thing or occurrence for which no written notice of potential claim as herein required was timely filed.

PART 2 - CONSTRUCTION MATERIALS

SECTION 200 – ROCK MATERIALS

200-2 UNTREATED BASE MATERIALS

200-2.1 General. Replace the entire subsection with the following:

Untreated base for pavement, curb, gutter, cross gutters, bus pads, hardscape and other improvements shall be either Crushed Aggregate Base conforming to 200-2.2 or Crushed Miscellaneous Base conforming to 200-2.4.

SECTION 206 - MISCELLANEOUS METAL ITEMS

Add the following section:

206-7 SECURITY BOLLARDS. Fixed post bollards shall be Calpipe Security Bollards (Phone No. 562-803-4388) 4-inch diameter schedule 40 carbon steel fixed post bollards (Part No. IBF04040) with dome bollard caps and powder coated with Tiger Drylac color RAL 6018 49/52720 38/50018 or approved equal. Total length shall be 48-inches with 36-inches above ground and 12-inches depth below when installed.

Manual lift retractable bollards shall be Calpipe Security Bollards (Phone No. 562-803-4388) 4-inch diameter (Part No. LBMR04040), 0.197" Wall, Type 304 stainless steel and polished to a #4 finish or approved equal. Length above grade shall be 36-inches. Cover plate shall be locked with a tamper resistant key when bollard is in the retracted position. All retractable bollards shall be keyed alike.

PART 3 - CONSTRUCTION METHODS

SECTION 300 – EARTHWORK

300-1 CLEARING AND GRUBBING.

300-1.3 Removal and Disposal of Materials.

300-1.3.1 General. Replace the entire subsection with the following:

Unless otherwise stated on the Plans or Specifications, all material removed from the Work shall become the property of the Contractor and shall be disposed of in a lawful manner. Removals shall include, but not limited to, all excess excavation material, trees and plants, debris, interfering portions of curb, gutters, asphalt and PCC concrete pavements and sidewalks (including base, where applicable), and miscellaneous items as shown on the Plans. The Contractor shall conform to the following requirements:

1) The Contractor shall not start any removal work unless it is prepared to perform reconstruction work within 24 hours of the time removals were begun, unless otherwise approved by the Engineer.

2) The Contractor shall complete forming and pouring of PCC construction within five (5) working days following the removal of existing material at any location.

3) The Contractor shall not remove on-site improvements until it is prepared to

construct the adjacent street section and shall promptly restore all such improvements as applicable, upon completion of the adjacent street work.

All concrete removed shall be hauled off the Work site no later than the calendar day following the day that the removal is performed.

Prior to making removals, the Contractor shall meet with the Engineer to verify the limits of removals, locations of joins, to establish smooth joins and to ensure proper drainage. The Contractor may make minor changes in the location of joins and the limits of removals, provided a smooth join and proper drainage can be achieved and it has obtained prior written approval from the Engineer.

In order to protect the public streets from deterioration due to hauling of materials, the Contractor shall submit, prior to the Pre-Construction Meeting, for approval a proposed route for hauling of materials for disposal. Upon approval, the Contractor shall strictly adhere to that route, unless written permission from the Engineer is obtained to change the route.

300-1.3.2 Requirements.

Add subparagraphs (d):

(d) **Miscellaneous Removals and Relocations.** This work shall include all removals not specifically listed in the Proposal or otherwise covered by these Specifications, and all necessary relocations and restorations of walls, fences, plants, hardscape, signs and other items, whether shown on the Plans or not, and as necessary to complete the improvements.

Add the following section:

300-1.3.3 Construction and Demolition Debris Recycling.

General. Consistent with the Agency's efforts to comply with the California Integrated Waste Management Act of 1989 (AB 939), the Contractor shall reduce, reuse, and/or recycle to the maximum extent feasible, the construction and demolition debris (debris) generated by this Contract hereby diverting the debris from disposal facilities, saving landfill space, and conserving virgin materials and natural resources.

Definitions.

Shall be as defined in the TORRANCE MUNICIPAL CODE, DIVISION 4, CHAPTER 3, ARTICLE 8 (or Section 43.8.1).

RECYCLING SUMMARY.

The Contractor shall prepare and submit a Recycling Summary report using the form included as Appendix III summarizing the disposal, reuse, and/or recycling activities which occurred throughout the Contract duration. This report shall be submitted by the Contractor to the Agency, before or with its request for the final Progress Payment for said Contract.

Failure of the Contractor to submit the Recycling Summary within the time specified will result in damages being sustained by the Agency. Such damages are, and will continue to be, impracticable and extremely difficult to determine. For failure to submit the Recycling Summary, as required, the Contractor shall pay to the Agency, or have withheld from monies

due it, the sum of $10,000 for a contract of $500,000 or more. The Contractor shall pay to the Agency, or have withheld from monies due it, 2% of the total contract amount for a contract of $499,999 or less.

Execution of the Contract shall constitute agreement by the Agency and Contractor that $10,000 (2% for contracts $499,999 or less) is the minimum value of the costs and actual damage caused by the failure of the Contractor to submit the Recycling Summary within the time specified. Such sum is liquidated damages and shall not be construed as a penalty, and may be deducted from payments due the Contractor.

PAYMENT.

The cost of construction and demolition debris recycling and completing the Recycling Summary report shall be considered as included in the Contract Unit Price for the various Bid items. The quantities reported will be used for information gathering purposes and not for purposes of payment to the Contractor.

300-1.4 Payment. Replace the entire subsection with the following:

When the Contract does not include a pay item for clearing and grubbing, payment under this section shall be by the following:

d) **Miscellaneous Removal and Relocations.** Payment for miscellaneous removals and relocations shall be included in the Bid price for other items of work and no additional compensation will be allowed therefore and shall include excavation, backfilling, grading, import if required, disposing of surplus material and appurtenant work.

SECTION 303 – CONCRETE AND MASONRY CONSTRUCTION

303-5 CONCRETE CURBS, WALKS, GUTTERS, CROSS GUTTERS, ALLEY INTERSECTIONS, ACCESS RAMPS, AND DRIVEWAYS.

303-5.7 Repairs and Replacements. Add the following:

The Contractor shall be responsible to protect all new concrete work from being etched, scratched or otherwise marked following replacement thereof. If new concrete work is marked, the Contractor shall replace it at its expense and no extra costs will be allowed.

SECTION 304 - METAL FABRICATION AND CONSTRUCTION

Add the following sections:

304-6 SECURITY BOLLARDS.

304-6.1 General. Security bollards shall conform to 206-7 of these Special Provisions. Installation shall be per manufacturer's recommendations and the appendices of these specifications.

304-6.1 Payment. Payment for security bollards shall be paid per each, complete in place, and shall include all labor and materials required for excavation, concrete coring, backfill, installation of bollard, forming, reinforcement, placement, finishing, curing, and all other labor and material to provide complete fixed bollard installations and installed working retractable bollards.

SECTION 310 - PAINTING

310-5 PAINTING VARIOUS SURFACES.

Use Sections 84-1 and 84-2 of the Caltrans Standard Specifications.

SECTION 84: TRAFFIC STRIPES AND PAVEMENT MARKINGS

84-1 GENERAL

84-1.01 Description. Replace the first two paragraphs with the following:

This work shall consist of replacing existing traffic and parking stall striping by applying paint at the locations obliterated by construction operations and as directed by the Engineer.

84-2.06 Payment. Replace the entire subsection with the following:

Payment for traffic and parking stall striping shall be on a lump sum basis per the Contract Unit Price and shall include full compensation for furnishing all labor, materials, tools, equipment, and incidentals, necessary to complete the Work.

All costs for establishing alignment of traffic and parking stall striping stripes, pavement markings, layout, temporary pavement painting, and sandblasting of existing lines and markings shall be included in the Contract Unit Price for “REPLACE STRIPING REMOVED OR DAMAGED DURING CONSTRUCTION ACTIVITIES” and no extra costs will be allowed.

Add the following:

SECTION 313 – CONCRETE WHEEL STOPS

313-1 General. Concrete wheel stops shall be four (4) feet long and six (6) inches high. Material for new concrete wheel stops shall be in accordance with Sections 201 and 303 of the latest edition of the Standard Specifications for Public Works Construction unless specified otherwise. Portland cement concrete shall be Class A six sack mix developing not less than 3,250 psi compressive strength at 28 days. All cement shall be Type II. The location of the new wheel stops shall be per the Plans or per the direction of the engineer in the field. The Wheel stops shall be pinned in place with a pair of 3/4 inch in diameter steel rebar twelve (12) inches long. NOTE: The Engineer will perform an inspection of any concrete wheel stop upon request by the Contractor.

313-1.1 Payment. Full compensation for furnishing of all necessary labor, equipment, and materials, and incidentals, necessary to install new concrete wheel stops and complete the work as specified in the Specifications, these Special Provisions, and as directed by the Engineer shall be considered as included in the price bid for "INSTALL 4’ CONCRETE WHEEL STOPS AND SECURE WITH ANCHOR PINS" and no additional compensation will be allowed therefore.

APPENDIX I

PRO FORMA PUBLIC WORKS AGREEMENT

PUBLIC WORKS AGREEMENT

This PUBLIC WORKS AGREEMENT ("Agreement") is made and entered into as of DATE (the "Effective Date"), by and between the CITY OF TORRANCE, a municipal corporation ("CITY"), and CONTRACTOR NAME, TYPE OF ENTITY ("CONTRACTOR").

RECITALS:

A. The CITY wishes to retain the services of an experienced and qualified CONTRACTOR to construct the **PROJECT NAME & BID NUMBER**;

B. In order to obtain the desired services, The CITY has circulated a Notice Inviting Bids for the construction of the **PROJECT NAME & BID NUMBER** (the "NIB"); and

C. CONTRACTOR has submitted a Bid (the "Bid") in response to the NIB. CONTRACTOR represents that it is qualified to perform those services requested in the Plans and Specifications. Based upon its review of all Bids submitted in response to the NIB, The CITY is willing to award the contract to CONTRACTOR.

AGREEMENT:

1. <u>SERVICES TO BE PERFORMED BY CONTRACTOR</u>

CONTRACTOR will provide the services and install those materials listed in the Plans and Specifications, which are on file in the Public Works Department. The NIB and the Plans and Specifications are made a part of this Agreement. A copy of the Bid is attached as Exhibit A.

2. <u>TERM</u>

Unless earlier terminated in accordance with Paragraph 4 below, this Agreement will continue in full force and effect for two years from the Effective Date.

3. <u>COMPENSATION</u>

A. CONTRACTOR's Fee.

For services rendered pursuant to this Agreement, CONTRACTOR will be paid in accordance with CONTRACTOR's Bid; provided, however, that in no event will the total amount of money paid the CONTRACTOR, for services initially contemplated by this Agreement, exceed the sum of $INSERT DOLLAR AMOUNT

("Agreement Sum"), plus a contingency of $INSERT DOLLAR AMOUNT, if first approved in writing by the CITY.

B. Schedule of Payment.
Provided that the CONTRACTOR is not in default under the terms of this Agreement, upon presentation of an invoice, CONTRACTOR will be paid monthly, within 30 days after the date of the monthly invoice.

4. TERMINATION OF AGREEMENT

A. Termination by CITY for Convenience.

1. CITY may, at any time, terminate the Agreement for CITY's convenience and without cause.

2. Upon receipt of written notice from CITY of such termination for CITY's convenience, CONTRACTOR will:

   a) cease operations as directed by CITY in the notice;
   b) take actions necessary, or that CITY may direct, for the protection and preservation of the work; and
   c) except for work directed to be performed prior to the effective date of termination stated in the notice, terminate all existing subcontracts and purchase orders and enter into no further subcontracts and purchase orders.

3. In case of such termination for CITY's convenience, CONTRACTOR will be entitled to receive payment for work executed; and costs incurred by reason of such termination, along with reasonable overhead and profit on the work not executed.

B. Termination for Cause.

1. If either party fails to perform any term, covenant or condition in this Agreement and that failure continues for 15 calendar days after the nondefaulting party gives the defaulting party notice of the failure to perform, this Agreement may be terminated for cause; provided, however, that if during the notice period the defaulting party has promptly commenced and continues diligent efforts to remedy the default, the defaulting party will have such additional time as is reasonably necessary to remedy the default.

2. In the event this Agreement is terminated for cause by the default of the CONTRACTOR, the CITY may, at the expense of the CONTRACTOR and its surety, complete this Agreement or cause it to be completed. Any check or bond delivered to the CITY in

connection with this Agreement, and the money payable thereon, will be forfeited to and remain the property of the CITY. All moneys due the CONTRACTOR under the terms of this Agreement will be retained by the CITY, but the retention will not release the CONTRACTOR and its surety from liability for the default. Under these circumstances, however, the CONTRACTOR and its surety will be credited with the amount of money retained, toward any amount by which the cost of completion exceeds the Agreement Sum and any amount authorized for extra services.

3. Termination for cause will not affect or terminate any of the rights of the CITY as against the CONTRACTOR or its surety then existing, or which may thereafter accrue because of the default; this provision is in addition to all other rights and remedies available to the CITY under law.

C. Termination for Breach of Law.

In the event the CONTRACTOR or any of its officers, directors, shareholders, employees, agents, subsidiaries or affiliates is convicted (i) of a criminal offense as an incident to obtaining or attempting to obtain a public or private contract or subcontract, or in the performance of a contract or subcontract; (ii) under state or federal statutes of embezzlement, theft, forgery, bribery, falsification or destruction of records, receiving stolen property, or any other offense indicating a lack of business integrity or business honesty which currently, seriously, and directly affects responsibility as a public consultant or contractor; (iii) under state or federal antitrust statutes arising out of the submission of bids or proposals; or (iv) of violation of Paragraph 19 of this Agreement; or for any other cause the CITY determines to be so serious and compelling as to affect CONTRACTOR's responsibility as a public consultant or contractor, including but not limited to, debarment by another governmental agency, then the CITY reserves the unilateral right to terminate this Agreement or to impose such other sanctions (which may include financial sanctions, temporary suspensions or any other condition deemed appropriate short of termination) as it deems proper. The CITY will not take action until CONTRACTOR has been given notice and an opportunity to present evidence in mitigation.

5. FORCE MAJEURE

If any party fails to perform its obligations because of strikes, lockouts, labor disputes, embargoes, acts of God, inability to obtain labor or materials or reasonable substitutes for labor or materials, governmental restrictions, governmental regulations, governmental controls, judicial

orders, enemy or hostile governmental action, civil commotion, fire or other casualty, or other causes beyond the reasonable control of the party obligated to perform, then that party's performance shall be excused for a period equal to the period of such cause for failure to perform.

6. RETENTION OF FUNDS

CONTRACTOR authorizes the CITY to deduct from any amount payable to CONTRACTOR (whether or not arising out of this Agreement) any amounts the payment of which may be in dispute or that are necessary to compensate the CITY for any losses, costs, liabilities, or damages suffered by the CITY, and all amounts for which the CITY may be liable to third parties, by reason of CONTRACTOR's negligent acts or omissions or willful misconduct in performing or failing to perform CONTRACTOR's obligations under this Agreement. In the event that any claim is made by a third party, the amount or validity of which is disputed by CONTRACTOR, or any indebtedness exists that appears to be the basis for a claim of lien, the CITY may withhold from any payment due, without liability for interest because of the withholding, an amount sufficient to cover the claim. The failure of the CITY to exercise the right to deduct or to withhold will not, however, affect the obligations of CONTRACTOR to insure, indemnify, and protect the CITY as elsewhere provided in this Agreement.

7. THE CITY'S REPRESENTATIVE

The Public Works Director is designated as the "City Representative," authorized to act in its behalf with respect to the work and services specified in this Agreement and to make all decisions in connection with this Agreement. Whenever approval, directions, or other actions are required by the CITY under this Agreement, those actions will be taken by the City Representative, unless otherwise stated. The City Manager has the right to designate another City Representative at any time, by providing notice to CONTRACTOR.

8. CONTRACTOR REPRESENTATIVE(S)

The following principal(s) of CONTRACTOR are designated as being the principal(s) and representative(s) of CONTRACTOR authorized to act in its behalf with respect to the work specified in this Agreement and make all decisions in connection with this Agreement:

REPRESENTATIVE 1
REPRESENTATIVE 2

9. INDEPENDENT CONTRACTOR

The CONTRACTOR is, and at all times will remain as to the CITY, a wholly independent contractor. Neither the CITY nor any of its agents will have control over the conduct of the CONTRACTOR or any of the CONTRACTOR's employees, except as otherwise set forth in this Agreement. The CONTRACTOR may not, at any time or in any manner, represent that it or any of its agents or employees are in any manner agents or employees of the CITY. CITY has no duty, obligation, or responsibility to CONTRACTOR's agents or employees under the Affordable Care Act. CONTRACTOR is solely responsible for any tax penalties associated with the failure to offer affordable coverage to its agents and employees under the Affordable Care Act and any other liabilities, claims and obligations regarding compliance with the Affordable Care Act with respect to CONTRACTOR's agents and employees. CITY is not responsible and shall not be held liable for CONTRACTOR's failure to comply with CONTRACTOR's duties, obligations, and responsibilities under the Affordable Care Act. CONTRACTOR agrees to defend, indemnify and hold CITY harmless for any and all taxes and penalties that may be assessed against CITY as a result of CONTRACTOR's obligations under the Affordable Care Act relating to CONTRACTOR's agents and employees.

10. BUSINESS LICENSE

The CONTRACTOR must obtain a City business license prior to the start of work under this Agreement, unless CONTRACTOR is qualified for an exemption.

11. OTHER LICENSES AND PERMITS

CONTRACTOR warrants that it has all professional, contracting and other permits and licenses required to undertake the work contemplated by this Agreement.

12. FAMILIARITY WITH WORK

By executing this Agreement, CONTRACTOR warrants that CONTRACTOR (a) has thoroughly investigated and considered the scope of services to be performed, (b) has carefully considered how the services should be performed, and (c) fully understands the facilities, difficulties and restrictions attending performance of the services under this Agreement. If the services involve work upon any site, CONTRACTOR warrants that CONTRACTOR has or will investigate the site and is or will be fully acquainted with the conditions there existing, prior to commencement of services set forth in this Agreement. Should CONTRACTOR discover any latent or unknown conditions that will

materially affect the performance of the services set forth in this Agreement, CONTRACTOR must immediately inform the CITY of that fact and may not proceed except at CONTRACTOR's risk until written instructions are received from the CITY.

13. CARE OF WORK

CONTRACTOR must adopt reasonable methods during the life of the Agreement to furnish continuous protection to the work, and the equipment, materials, papers, documents, plans, studies and other components to prevent losses or damages, and will be responsible for all damages, to persons or property, until acceptance of the work by the CITY, except those losses or damages as may be caused by the CITY's own negligence.

14. CONTRACTOR'S ACCOUNTING RECORDS; OTHER PROJECT RECORDS

Records of the CONTRACTOR's time pertaining to the project, and records of accounts between the CITY and the CONTRACTOR, will be kept on a generally recognized accounting basis. CONTRACTOR will also maintain all other records, including without limitation specifications, drawings, progress reports and the like, relating to the project. All records will be available to the CITY during normal working hours. CONTRACTOR will maintain these records for three years after final payment.

15. INDEMNIFICATION

CONTRACTOR will indemnify, defend, and hold harmless CITY, the Successor Agency to the Former Redevelopment Agency of the City of Torrance, the City Council, each member thereof, present and future, its officers, agents and employees from and against any and all liability, expenses, including defense costs and legal fees, and claims for damages whatsoever, including, but not limited to, those arising from breach of contract, bodily injury, death, personal injury, property damage, loss of use, or property loss however the same may be caused and regardless of the responsibility for negligence. The obligation to indemnify, defend and hold harmless includes, but is not limited to, any liability or expense, including defense costs and legal fees, arising from the negligent acts or omissions, or willful misconduct of CONTRACTOR, its officers, employees, agents, subcontractors or vendors. It is further agreed, CONTRACTOR's obligations to indemnify, defend and hold harmless will apply even in the event of concurrent negligence on the part of CITY, the City Council, each member thereof, present and future, or its officers, agents and employees, except for liability resulting solely from the negligence or willful misconduct of CITY, its officers, employees or agents.

Payment by CITY is not a condition precedent to enforcement of this indemnity. In the event of any dispute between CONTRACTOR and CITY, as to whether liability arises from the sole negligence of the CITY or its officers, employees, agents, subcontractors or vendors, CONTRACTOR will be obligated to pay for CITY's defense until such time as a final judgment has been entered adjudicating the CITY as solely negligent. CONTRACTOR will not be entitled in the event of such a determination to any reimbursement of defense costs including but not limited to attorney's fees, expert fees and costs of litigation.

16. NON-LIABILITY OF THE CITY'S OFFICERS AND EMPLOYEES

No officer or employee of the CITY will be personally liable to CONTRACTOR, in the event of any default or breach by the CITY or for any amount that may become due to CONTRACTOR.

17. INSURANCE

A. CONTRACTOR must maintain at its sole expense the following insurance, which will be full coverage not subject to self-insurance provisions:

1. Automobile Liability, including owned, non-owned and hired vehicles, with at least the following limits of liability:

   a. Combined single limits of $2,000,000 per occurrence.

2. General Liability including coverage for premises, products and completed operations, independent contractors, personal injury and contractual obligations with combined single limits of coverage of at least $3,000,000 per occurrence, with an annual aggregate of no less than $5,000,000.

3. Workers' Compensation with limits as required by the State of California and Employers Liability with limits of at least $1,000,000.

B. The insurance provided by CONTRACTOR will be primary and non-contributory.

C. CITY, the Successor Agency to the Former Redevelopment Agency of the City of Torrance, the City Council and each member thereof, members of boards and commissions, every officer, agent, official, employee and volunteer must be named as additional insureds under the automobile and general liability policies.

D. CONTRACTOR must provide certificates of insurance and/or endorsements to the City Clerk of the City of Torrance before the commencement of work.

E. Each insurance policy required by this Paragraph must contain a provision that no termination, cancellation or change of coverage can be made without thirty days notice to the CITY.

F. CONTRACTOR must include all subcontractors as insureds under its policies or must furnish separate certificates and endorsements for each subcontractor. All coverage for subcontractors will be subject to all of the requirements of this Paragraph 17.

18. SUFFICIENCY OF INSURERS

Insurance required by this Agreement will be satisfactory only if issued by companies admitted to do business in California, rated "B+" or better in the most recent edition of Best's Key Rating Guide, and only if they are of a financial category Class VII or better, unless these requirements are waived by the Risk Manager of the CITY ("Risk Manager") due to unique circumstances. In the event the Risk Manager determines that the work or services to be performed under this Agreement creates an increased or decreased risk of loss to the CITY, the CONTRACTOR agrees that the minimum limits of any insurance policies and/or the performance bond required by this Agreement may be changed accordingly upon receipt of written notice from the Risk Manager; provided that CONTRACTOR will have the right to appeal a determination of increased coverage by the Risk Manager to the City Council of the CITY within 10 days of receipt of notice from the Risk Manager.

19. CONFLICT OF INTEREST

A. No officer or employee of the CITY may have any financial interest, direct or indirect, in this Agreement, nor may any officer or employee participate in any decision relating to the Agreement that effects the officer or employee's financial interest or the financial interest of any corporation, partnership or association in which the officer or employee is, directly or indirectly interested, in violation of any law, rule or regulation.

B. No person may offer, give, or agree to give any officer or employee or former officer or employee, nor may any officer or employee solicit, demand, accept, or agree to accept from another person, a gratuity or an offer of employment in connection with any decision, approval, disapproval, recommendation, preparation or any part of a program requirement or a purchase request, influencing the content of any specification or procurement standard, rendering of

advice, investigation, auditing, or in any other advisory capacity in any way pertaining to any program requirement, contract or subcontract, or to any solicitation or proposal.

20. NOTICE

A. All notices, requests, demands, or other communications under this Agreement will be in writing. Notice will be sufficiently given for all purposes as follows:

1. Personal delivery. When personally delivered to the recipient: notice is effective on delivery.

2. First Class mail. When mailed first class to the last address of the recipient known to the party giving notice: notice is effective three mail delivery days after deposit in an United States Postal Service office or mailbox.

3. Certified mail. When mailed certified mail, return receipt requested: notice is effective on receipt, if delivery is confirmed by a return receipt.

4. Overnight delivery. When delivered by an overnight delivery service, charges prepaid or charged to the sender's account: notice is effective on delivery, if delivery is confirmed by the delivery service.

5. Facsimile transmission. When sent by fax to the last fax number of the recipient known to the party giving notice: notice is effective on receipt. Any notice given by fax will be deemed received on the next business day if it is received after 5:00 p.m. (recipient's time) or on a non-business day.

6. Addresses for purpose of giving notice are as follows:

CONTRACTOR:	CONTRACTOR'S NAME AND ADDRESS Fax: INSERT FAX NUMBER
CITY:	City Clerk City of Torrance 3031 Torrance Boulevard Torrance, CA 90509-2970 Fax: (310) 618-2931

with a copy to: Attn: PROJECT MANAGER'S NAME
Public Works Department
City of Torrance
20500 Madrona Avenue
Torrance, CA 90503
Fax: (310) 781-6902

B. Any correctly addressed notice that is refused, unclaimed, or undeliverable because of an act or omission of the party to be notified, will be deemed effective as of the first date the notice was refused, unclaimed or deemed undeliverable by the postal authorities, messenger or overnight delivery service.

C. Either party may change its address or fax number by giving the other party notice of the change in any manner permitted by this Agreement.

21. PROHIBITION AGAINST ASSIGNMENT AND SUBCONTRACTING

This Agreement and all exhibits are binding on the heirs, successors, and assigns of the parties. The Agreement may not be assigned or subcontracted by either the CITY or CONTRACTOR without the prior written consent of the other.

22. INTEGRATION; AMENDMENT

This Agreement represents the entire understanding of the CITY and CONTRACTOR as to those matters contained in it. No prior oral or written understanding will be of any force or effect with respect to the terms of this Agreement. The Agreement may not be modified or altered except in writing signed by both parties.

23. INTERPRETATION

The terms of this Agreement should be construed in accordance with the meaning of the language used and should not be construed for or against either party by reason of the authorship of this Agreement or any other rule of construction that might otherwise apply.

24. SEVERABILITY

If any part of this Agreement is found to be in conflict with applicable laws, that part will be inoperative, null and void insofar as it is in conflict with any applicable laws, but the remainder of the Agreement will remain in full force and effect.

25. TIME OF ESSENCE

Time is of the essence in the performance of this Agreement.

26. GOVERNING LAW; JURISDICTION

This Agreement will be administered and interpreted under the laws of the State of California. Jurisdiction of any litigation arising from the Agreement will be in Los Angeles County, California.

27. COMPLIANCE WITH STATUTES AND REGULATIONS

CONTRACTOR will be knowledgeable of and will comply with all applicable federal, state, county and city statutes, rules, regulations, ordinances and orders.

28. WAIVER OF BREACH

No delay or omission in the exercise of any right or remedy by a nondefaulting party on any default will impair the right or remedy or be construed as a waiver. A party's consent or approval of any act by the other party requiring the party's consent or approval will not be deemed to waive or render unnecessary the other party's consent to or approval of any subsequent act. Any waiver by either party of any default must be in writing and will not be a waiver of any other default concerning the same or any other provision of this Agreement.

29. ATTORNEY'S FEES

Except as provided for in Paragraph 15, in any dispute, litigation, arbitration, or other proceeding by which one party either seeks to enforce its rights under this Agreement (whether in contract, tort or both) or seeks a declaration of any rights or obligations under this Agreement, the prevailing party will be awarded reasonable attorney's fees, together with any costs and expenses, to resolve the dispute and to enforce any judgment.

30. EXHIBITS

All exhibits identified in this Agreement are incorporated into the Agreement by this reference.

31. CONTRACTOR'S AUTHORITY TO EXECUTE

The persons executing this Agreement on behalf of the CONTRACTOR warrant that (i) the CONTRACTOR is duly organized and existing; (ii) they

are duly authorized to execute this Agreement on behalf of the CONTRACTOR; (iii) by so executing this Agreement, the CONTRACTOR is formally bound to the provisions of this Agreement; and (iv) the entering into this Agreement does not violate any provision of any other Agreement to which the CONTRACTOR is bound.

City of Torrance,
a municipal corporation

_____
Patrick J. Furey, Mayor

ATTEST:

_____
Rebecca Poirier, MMC
City Clerk

APPROVED AS TO FORM:

JOHN L. FELLOWS III
City Attorney

By: _____

BUSINESS OR INDIVIDUAL NAME
TYPE OF ENTITY

By: _____
SIGNER, TITLE

Attachment: Exhibit A: Bid
Revised: 12/11/14

EXHIBIT A

Bid

APPENDIX II

CITY OF TORRANCE PERMIT AND BUSINESS LICENSE

City of Torrance, Community Development Department

Permit Application Form

3031 TORRANCE BLVD. • TORRANCE, CA 90503

OWNER/APPLICANT INFORMATION

Name: _____

Address: _____

City/State: _____

Zip: _____

Phone: _____

Evacuation permits will not be issued without USA I.D. number.

Underground Service Alert
Call 1-800/227-2600

USA I.D.#: _____

CONTRACTOR INFORMATION ON FILE

_____

_____

_____

_____

_____

State License #: _____

Class: _____ Exp. Date: _____

City Business#: _____

Workers Comp. #: _____

Exp. Date: _____

JOB LOCATION/ADDRESS

(or closest street address)

Please list cross streets: _____

_____

DESCRIPTION OF WORK

_____

_____

Lin/Ft Trench _____ Width of Trench _____ Lin/Ft Curb & Gutter _____

Lin/Ft Bore _____ Sewer Connection _____ Number of Curb Drains _____

Sq/Ft Asphalt _____ Sq/Ft Concrete _____ Sq/Ft Dirt _____

Work Order Number (*for utility companies*): _____

Applicant or Authorized Signature: _____

For further permit information, please call 310/618-5898 or Fax 310/618-2846.

Contractor Qualification List

Curb/Gutter ..... A(General Engineering)
C8(Concrete Contractor)

Driveways ..... A(General Engineering)
C8(Concrete Contractor)

Sidewalks ..... A(General Engineering)
B(General Building)
C8(Concrete Contractor)

Street/Alley ..... A(General Engineering)
C8(Concrete Contractor)
C12(Earth and Paving Contractor)

Sewer Lateral ..... A (General Engineering)
C34(Pipeline Contractor)
C42(Sanitation Contractor)

Sewer Mainline ..... A(General Engineering)
C34(Pipeline Contractor)
C42(Sanitation Contractor)

Storm Drains ..... A(General Engineering)
C34(Pipeline Contractor)
C42(Sanitation Contractor)

U/G Utilities ..... A (General Engineering)
(Water, Gas or Oil) C34 (Pipeline Contractor)

U/G Electrical ..... A (General Engineering)
C8 (Concrete Contractor)
C12 (Earth and Paving Contractors)

Contractor Qualification List

1) FOR INSPECTIONS 24 hour notice is required, before, during, and after construction. Call 310-618-5898, 7:30 AM – 5:30 PM, to SCHEDULE AN INSEPCTION.

2) Provide TRAFFIC CONTROL per the "CITY OF TORRANCE CONSTRUCTION TRAFFIC CONTROL PROCEDURES." Street closures shall be per City of Torrance Standard T603. Major street lane closures between 8:30 AM – 3:30 PM only. ONE STANDARD ARROWBOARD REQUIRED FOR EACH LANE CLOSURE.

3) Permitt is not valid until two working days after notifying DIG-ALERT of project. USA # _____ .

4) Do not remove any trees or shrubs without approval of Torrance Tree Supervisor (310-781-6900).

5) Contractor will be billed for overtime inspection services. OVERTIME REQUESTS must be submitted for approval 24 hrs in advance.

6) Construction site CLEANUP and GRAFFITI removal must be completed prior to finaling of this permit. The work site shall be kept in a well maintained condition. Signage shall be free of graffiti, replaced if bent, vandalized or displays loss of reflectivity. Any graffiti on construction signs must be removed or replaced within 24 hours of notification.

7) Any street striping, crosswalk, raised reflective pavement marker or pavement markings damaged by this construction shall be replaced to the satisfaction of the Torrance Public Works Department (310-781-6900).

8) THIS PERMIT WILL BE REVOKED if any pollutant is released into or allowed to remain in any component of the city drainage system.

9) Trench backfill and pavement repairs shall be per City of Torrance Standard T116.

10) Any irrigation system components damaged by this construction shall be replaced to the satisfaction of Park Services (310-618-2930).

11) All survey monuments in the project area MUST be located and tied out and a Corner Record filed prior to the start of construction. Also, all destroyed monuments must be replaced prior to receiving final inspection.

12) It is the responsibility of the contractor to REPLACE any PAVEMENT removed by this construction.

13) The City of Torrance is held harmless from the results of any action or accidents caused by the permittee, his employees, or equipment in the performance of the work described or covered in this permit. Validation of this permit SHALL NOT be held to permit or to be an approval of the violation of any applicable provision of the City Code covering this work, or any other provisions of the City of Torrance Code. In the granting of a Construction & Excavation permit, the Community Development Director may impose such conditions thereon, in addition to those otherwise provided herein, as are reasonably necessary to prevent the proposed operations from being conducted in such a manner as to constitute or create a HAZARD TO LIFE or property or be detrimental to property.

NOTICE
CITY OF TORRANCE
COMMUNITY DEVELOPMENT DEPARTMENT/
ENGINEERING DIVISION
NEW INSURANCE REGULATIONS

The City of Torrance Community Development Department/Engineering Division will be requiring proof of liability insurance from each contractor applying for a Construction & Excavation permit to work in the public right-of-way or in a public easement beginning October 1, 2001. Insurance shall cover contractor and vehicles used in the construction. The attached requirements dated September 20, 2001 will detail the insurance limits.

All insurance certificates shall have an additional clause that states: ***"The City of Torrance, the City Council and each member thereof, members of boards and commissions, every officer, agent, official, employee and volunteer"*** as additional insured.

Contractors should bring in proof of insurance at the time of application for permit. For major companies that are self-insured, a letter stating this fact and signed by an officer of the firm will be acceptable. Annual insurance may also be kept on file for contractors working periodically within the City of Torrance.

If you have any questions, please contact the Engineering Division Permit Counter at 310-618-5898.

JEFFERY W. GIBSON
Community Development Director
City of Torrance

EFFECTIVE 8/11/03

X:Secretry\cks\Permits-Insurance Req.

8/11/03

CITY OF TORRANCE
COMMUNITY DEVELOPMENT DEPARTMENT/
ENGINEERING DIVISION

PERMIT APPLICATION FORM
INSURANCE REQUIREMENTS

Any entity performing work on City streets, right-of-way, and property must comply with the following requirements.

1. TYPE OF INSURANCE

Any entity performing work must maintain at their sole expense the following insurance, which shall be full coverage not subject to self-insurance provisions.

- General Liability including coverage for premises, products and completed operations, underground hazards, independent contractors, personal injury and contractual obligations with combined single limits of at least $1,000,000 per occurrence.
- Automobile Liability, including owned, non-owned and hired vehicles, with at least the following limits of liability:
  - Primary Bodily Injury with limits of at least $500,000 per person, $1,000,000 per occurrence **AND**; Primary Property Damage with limits of at least $500,000per occurrence, **OR**
  - Combined single limits of at least $1,000,000 per occurrence.
- Workers' Compensation with limits as required by the State of California and Employer's Liability with limits of at least $1,000,000.

2. CERTIFICATES

- Certificates or an attached endorsement must be provided that contains the following provisions:
  - The City of Torrance, the City Council and each member thereof, members of boards and commissions, every officer, agent, official, employee and volunteer must be named as additional insured under the automobile and general liability policies.
  - The insurance policies required by this clause shall contain a provision that no termination, cancellation or change of coverage can be made without 30 days written notice to the City.

3. FILING REQUIREMENTS

- Certificates of insurance and/or endorsements must be provided to the Community Development Department, Permits and Records Section, 3031 Torrance Blvd., Torrance, CA 90503, prior to the issuance of the permit.

4. ADDITIONAL REQUIREMENT

- Insurance required of any entity performing work will be satisfactory only if issued by companies rated "B+" or better in the most recent edition of Best's Key Rating Guide, and only if they are of a financial category of a VII or better, unless these requirements are modified or waived by the City's Risk Manager.

Please call the Business License Office at 310-618-5923 for fee amounts. Payment must be submitted with your application.

FOR OFFICIAL USE ONLY

1. LICENSE NO. | 2. CATEGORY NO.

HOME OCCUPATION | HEALTH PERMIT | 3. NAICS CODE

City of Torrance, Revenue Division

Business License Application

3031 Torrance Blvd, Torrance, CA 90503 • 310/618-5828 • 310/618-5852 Fax

PART I. APPLICANT TO ANSWER ALL QUESTIONS IN THIS SECTION (print or type)

4. BUSINESS NAME OR DBA		5. CORPORATE NAME (IF DIFFERENT FROM ABOVE)		
6. BUSINESS ADDRESS	SUITE #	CITY	STATE	ZIP
7. MAILING ADDRESS	SUITE #	CITY	STATE	ZIP
8. NATURE OF BUSINESS (state type of business being conducted at this location)	9. NO. OF PERSONS WORKING IN TORRANCE	10. BUSINESS PHONE	11. CELL PHONE	
12. NAME OF PERSON MAKING APPLICATION (must be an owner, partner or corporate officer)	13. TITLE	14. HOME PHONE	15. EMAIL ADDRESS	
16. RESIDENCE ADDRESS	CITY	STATE	ZIP	17. DRIVER'S LICENSE # / 18. SOCIAL SECURITY #
19. STATE CONTRACTOR'S LICENSE #	20. SQUARE FOOTAGE	21. STATE SELLERS PERMIT #	22. FED. TAX ID #	23. STATE TAX ID #

24. OWNERSHIP INFORMATION ☐ LLC ☐ PARTNERSHIP ☐ CORPORATION ☐ SOLE OWNERSHIP

NAMES OF OWNER, PARTNERS, OR PRINCIPAL OFFICERS	TITLE	HOME ADDRESS	HOME PHONE

I declare that I am the owner, partner, corporate officer or person with the power of attorney, and I understand if all the information provided above is not the true the business license being applied for may be revoked as outlined in section 31.9.10 of the Torrance Municipal Code.

I am duly authorized to make this application. All of the information provided in this application is true and correct. The business will not provide any service, good or product which is illegal under Federal, State, or Local Laws. I declare under penalty of perjury that the foregoing is true and correct.

SIGNATURE _____ DATE _____

PART II. FOR OFFICIAL USE ONLY

BASIC FEE	APPLICATION SENT FOR ZONING? ☐ YES ☐ NO	PROCESSING FEE	FIRE INSP. FEE	OTHER
PER PERSON FEE	OTHER (cont'd)			
PENALTY FEE	HOLD ☐ YES ☐ NO	ENT. FEE	DANCE/PIANO FEE	
RECEIVED BY	DATE	CHECK NO.	BANK NO.	CASH / TOTAL AMOUNT $

APPENDIX III

CONSTRUCTION & DEMOLITION WASTE MANAGEMENT PLAN (WMP)

Building Permit Number: _____

CITY OF TORRANCE

Construction & Demolition Waste Management Plan (WMP)

THE REQUIREMENT IS TO REUSE OR RECYCLE AT LEAST 50% OF PROJECT WASTE AND 100% OF EXCAVATED SOIL AND LAND-CLEARING DEBRIS

1) As part of your application, you must complete the front and back of this page and the "estimate" or left side of the table on the backside of this page to the best of your ability, indicating that you will recycle at least 50% of the waste from the project and 100% of excavated soil and land-clearing debris.

2) As your project proceeds, collect and keep receipts of all waste disposed, recycled, reused or donated. Receipts must show material type, weight of material, how the material was treated and the facility used.

3) To final your project, you must then fill out the "actual" or right side of the table on the backside of this sheet, and submit it again with all the receipts to verify that at least 50% of the project's waste and 100% of excavated soil and land-clearing debris was diverted from the landfills.

Please note, if you are contracting with a different company to haul your waste or using a roll off box from another company, that company must have a business license to operate in the City of Torrance.

A COPY OF THIS WMP AND RECEIPTS (SHOWING MATERIAL TYPE, WEIGHT, TREATMENT AND FACILITY USED) FOR ALL RECYCLING AND DISPOSAL SHALL BE SUBMITTED BEFORE THE PROJECT WILL RECEIVE FINAL BUILDING APPROVAL. (FOR DEMO PERMITS, THE RECEIPTS FOR THE DEMOLITION WASTE SHOULD BE PROVIDED BEFORE THE FIRST FOOTING INSPECTION AFTER THE BUILDING PERMIT HAS BEEN ISSUED.)

Project Name: _____

Location: _____

Requesting Infeasibility Exemption: ☐ **Yes** ☐ **No**

Contractor Name: _____ **Contact Name**: _____

Address: _____ **Contact Phone**: _____

Recycler: _____ **Recycler Contact**: _____

Recycler Address: _____ **Recycler Contact Phone**: _____

CITY USE ONLY

	Application (Date)	Final (Date)
Approved		
Further explanation needed (see attached)		
Denied		
Infeasibility Exemption Approved		
Reviewed By		

Submit this form and the attached Waste Management Plan Table to: **WMP Compliance Official**
Alison Sherman, Public Works
asherman@TorranceCA.Gov
Fax: 310-781-6902

For questions or for in-person visit (by appointment only), please call 310-781-6900

CITY OF TORRANCE

Construction & Demolition Waste Management Plan Table

Project Name: _____

Total Estimated Waste Generated by Project: _____ (in tons). (Ask your hauler, recycler or site cleanup vendor to assist you. Use receipts from your previous jobs for estimates)					
Complete and return with Building Permit Application			**Complete and return with receipts prior to final building approval**		
Material Type	Estimated Reused/ Recycled	Estimated Disposed/ Landfilled	Actual Reused/ Recycled	Actual Disposed/ Landfilled	Vendor or Facility Used (Destination)
	(In Tons)	(In Tons)	(In Tons)	(In Tons)	
Asphalt & Concrete					
Bricks/Masonry/Tiles					
Building Materials (doors, windows, fixtures, etc.)					
Cardboard					
Excavated dirt and land-clearing debris					
Dirt					
Landscape Debris (Plant & Tree Trimmings)					
Scrap Metal					
Unpainted Wood & Pallets					
Other (painted wood & drywall, roofing, etc.)					
Mixed C&D*					
Trash/Garbage					
TOTAL					

If you are requesting an infeasibility exemption and the estimated amount reused/recycled is less than 50%, please explain why (attach additional sheets if necessary):

_____

_____

_____

Prepared by (print): _____ Date: _____

Signature: _____ Phone Number:_____

Must be signed by Contractor or Owner. Signatory accepts financial responsibility for penalties for non-compliance.

_____

* *Mixed C&D* is defined as a mixture of three or more materials (e.g. wood, drywall, roofing, etc.) from construction or demolition sites that will be taken to a facility capable of recycling those commingled materials.

Conversion Rates

The following conversion rates are estimates to help complete the Waste Management Plan by converting materials into tonnage format. The ranges vary widely, depending on how the materials are handled (compacted, loose, chipped, etc.). Use the conversion factors and receipts from any previous projects to help you estimate the potential amount of materials and diversion. Take into consideration the type and load of vehicles that will be used to haul the materials. Ask your hauler or recycler to assist you in estimating these numbers.

Material	Lbs/cy	Tons/cy
Asphalt	1,400 lbs/cy	0.7 tons/cy
Brick	2,430 lbs/cy	1.21 tons/cy
Cardboard	100 lbs/cy	0.05 tons/cy
Concrete	2,600 lbs/cy (Sources range from 1,000 to 4,000)	1.3 tons/cy
Dirt/Soils	2,660 lbs/cy	1.33 tons/cy
Drywall	700 lbs/cy	0.35 tons/cy
Wood (chipped)	300 - 650 lbs/cy	0.15 – 0.3 tons/cy
Mixed C&D Debris	900 lbs/cy	0.45 tons/cy
Mixed Waste/Trash	100 - 350 lbs/cy	0.5 - 0.175 tons/cy

APPENDIX IV

MANUFACTURER'S DRAWINGS*

**FOR REFERENCE ONLY. THE CITY RESERVES THE EXCLUSIVE RIGHT TO DETERMINE IF ANY OTHER PROPOSED MATERIAL/PRODUCT CAN BE CONSIDERED "EQUIVALENT"*

Cap Style Options:

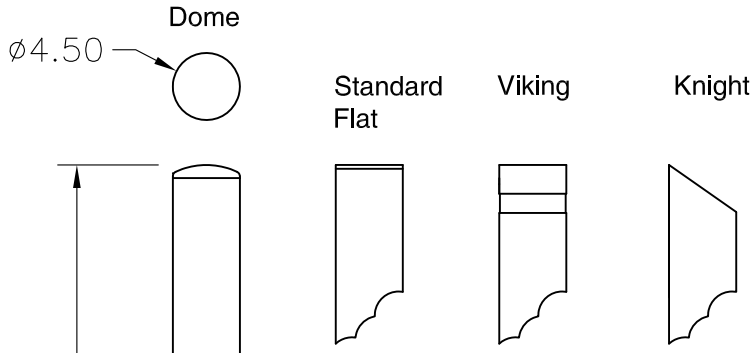

Specification

Bollard Material (4" Nominal Size)
- ☐ SSF04000 Sch 10 Stainless Steel
- ☐ SSF04040 Sch 40 Stainless Steel
- ☐ SSF04080 Sch 80 Stainless Steel
- ☐ IBF04040 Sch 40 ASTM A-53 Carbon Steel
- ☐ IBF04080 Sch 80 ASTM A-53 Carbon Steel

Carbon Steel Bollard Finish
- ☐ Powdercoat RAL #_____
- ☐ As Specified_____

Bollard Cap Style
- ☐ Dome
- ☐ Standard Flat
- ☐ Viking
- ☐ Knight

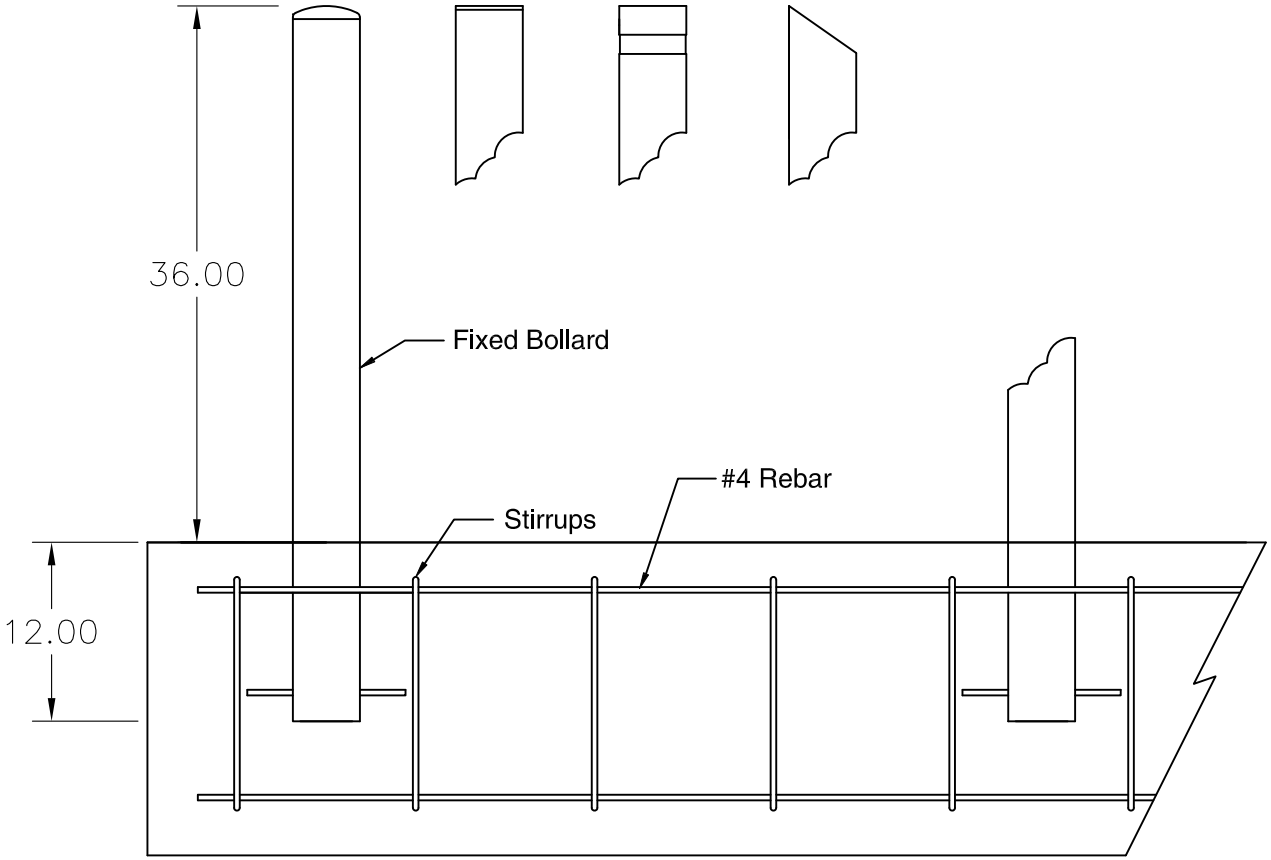

Recommended footing
Engineering by others

ELEVATION VIEW - FOUNDATION

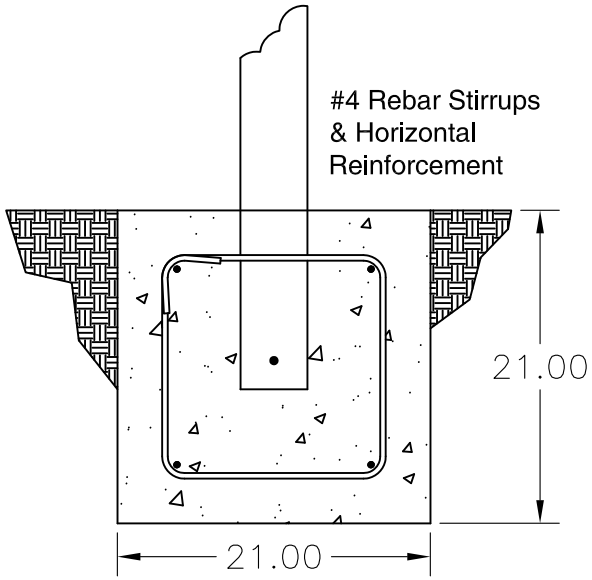

END VIEW - FOUNDATION

Series Number :	**4" CS & SS Fixed**	Rev :	**R 0**	Product Line :	**Fixed**	Drawn By :	**JPC**	Drawing Num :	**IBF04040**
Product Family :	**CPSB**			Product Sub-Line :		Produced On :	**2010-10**	Drawing Rev :	
Product Class :	**Standard**							Sheet :	**1** of : **1**

CAL PIPE SECURITY BOLLARDS

12021 Woodruff Avenue
Downey California 90241
USA

www.CalPipeBollards.com
562.803.4388 Direct
562.803.9885 Fax

CUT SHEET

d
4" = 5¾"
6" = 9"
7½" =

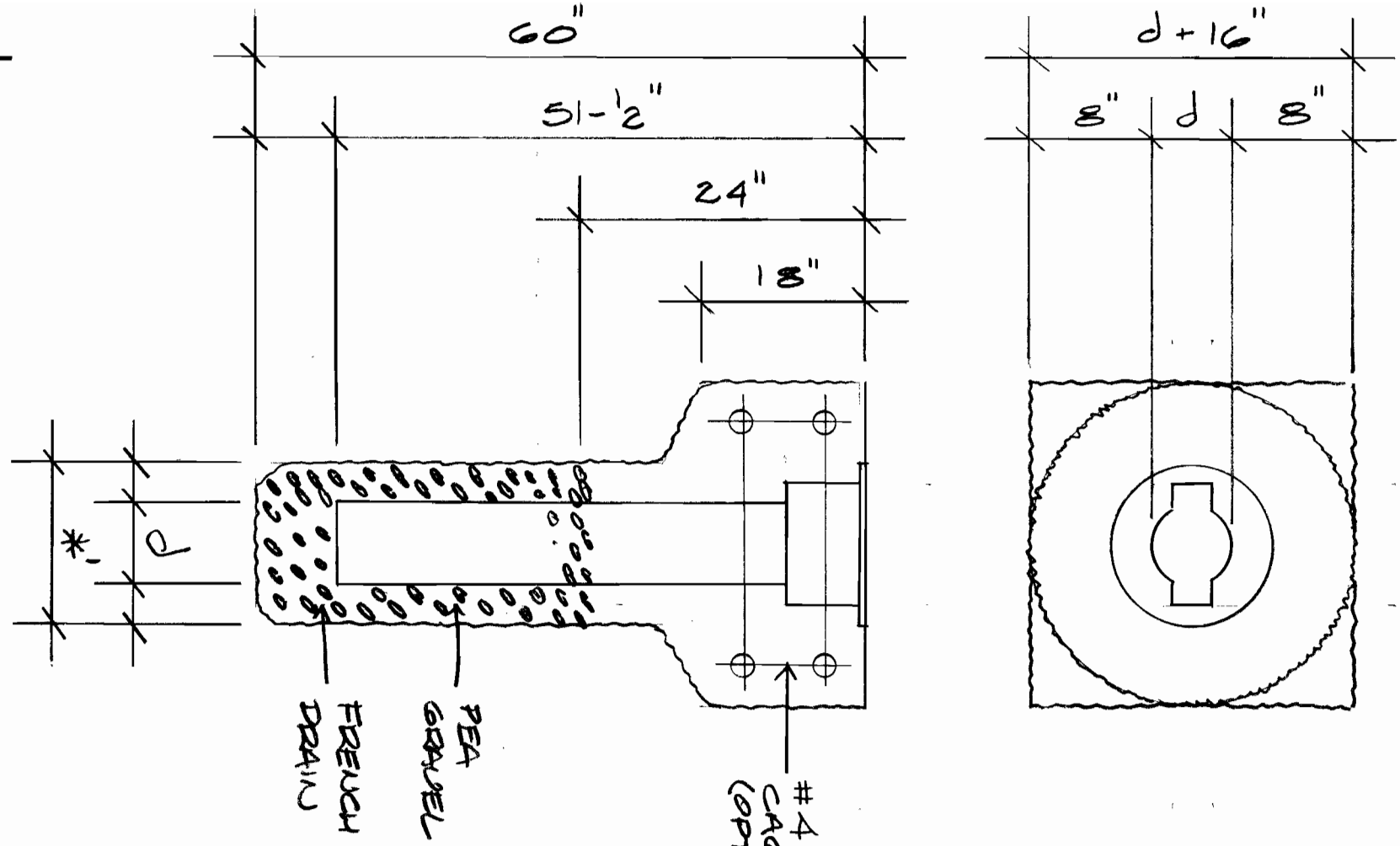

* WHATEVER DIAMETER ALLOWS GRAVEL-PACK AROUND SILO.

CAL PIPE SECURITY BOLLARDS
LBMR FOOTING SCHEMATIC
FOR CITY OF BREA
2008-1013