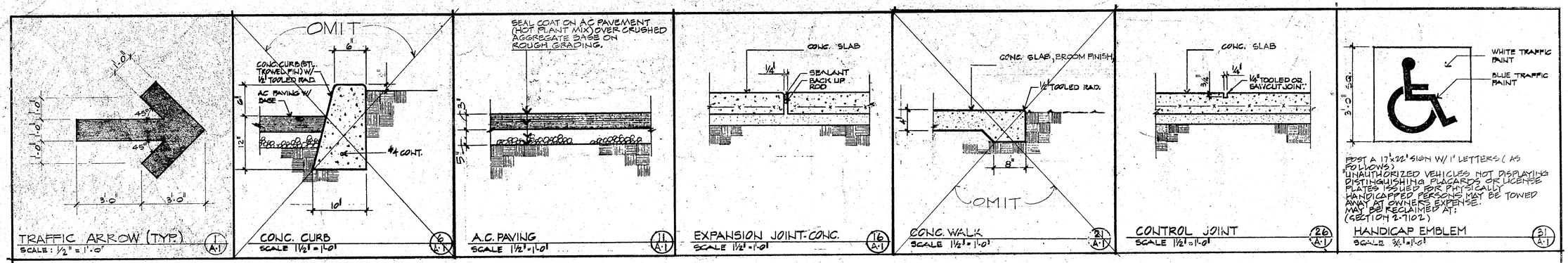

REVISIONS		
NO.	DATE	DESCRIPTION

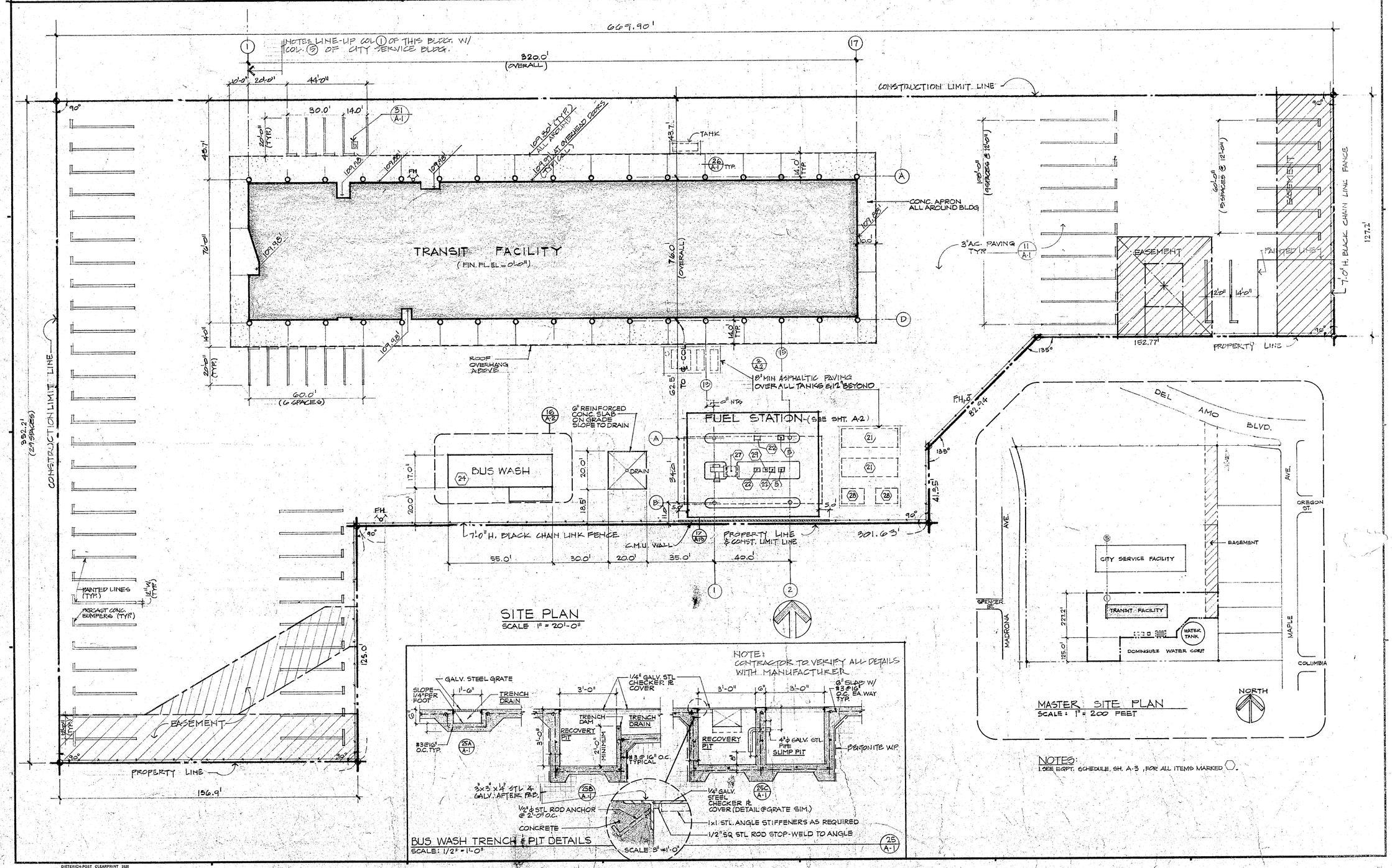

HUGH GIBBS & DONALD GIBBS
Architects F.A.I.A.
3575 Long Beach Boulevard, Long Beach, California

DRAWN PR	DATE 12-16-85
CHECKED	JOB 1791

TORRANCE TRANSIT FACILITY

TORRANCE
CALIFORNIA

FEDERAL PROJECT NO. CA-03-0208-01

SITE PLAN DETAILS

SHEET A1

DIETERICH-POST CLEARPRINT 1020

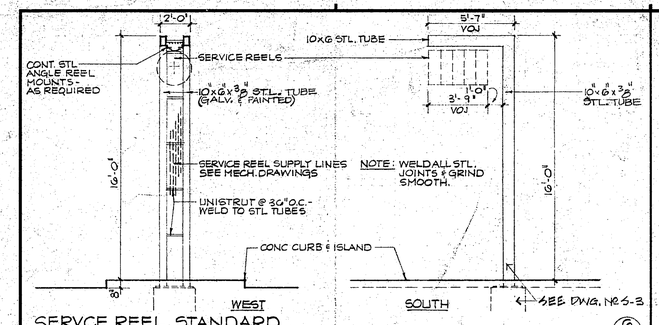

SERVCE REEL STANDARD (6 / A-2)

SCALE: 1/4" = 1'-0"

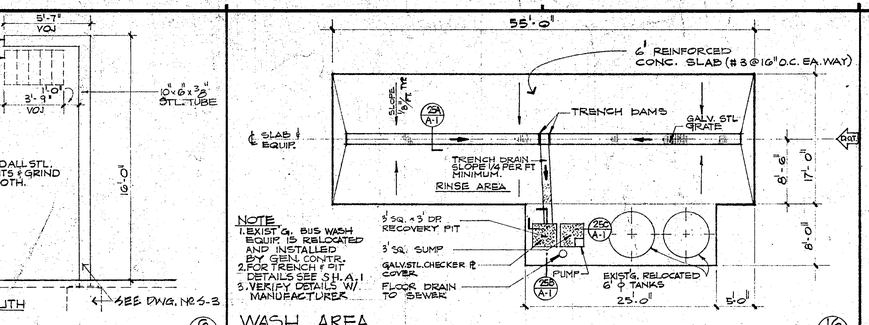

WASH AREA (16 / A-2)

SCALE: 1/8" = 1'-0"

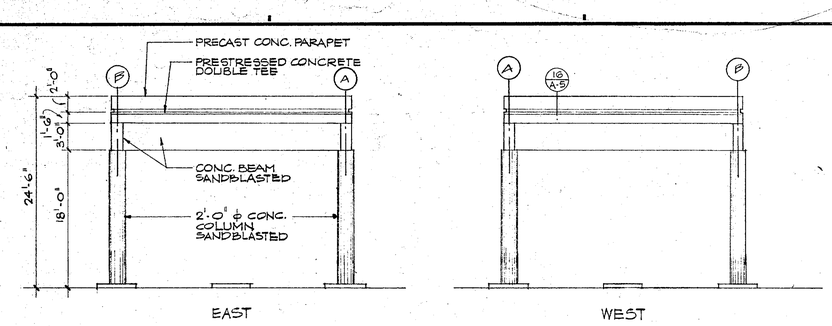

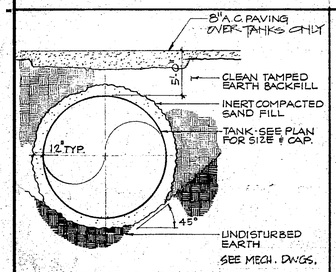

TYP. TANK INSTALLATION (2 / A-2)

SCALE: NONE

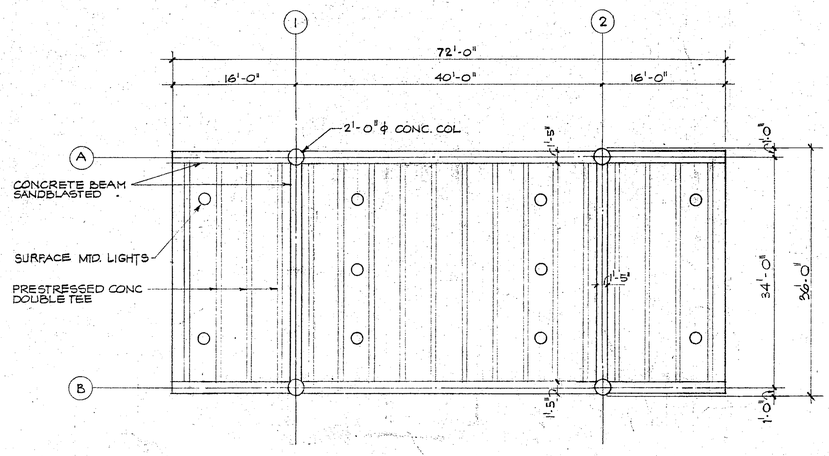

FUEL STA. REFLECTED CLG. PLAN

SCALE: 1/8" = 1'-0"

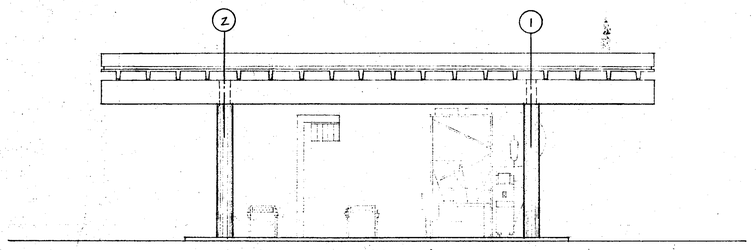

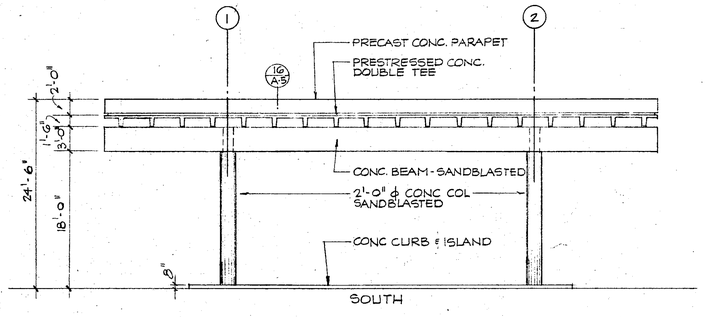

FUEL STATION ELEVATIONS

SCALE: 1/8" = 1'-0"

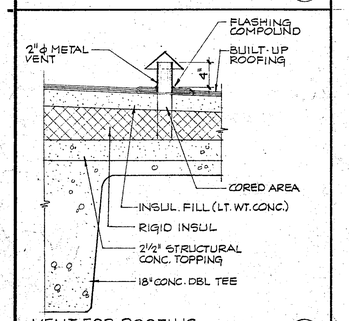

VENT FOR ROOFING (3 / A-2)

SCALE: 1½" = 1'-0"

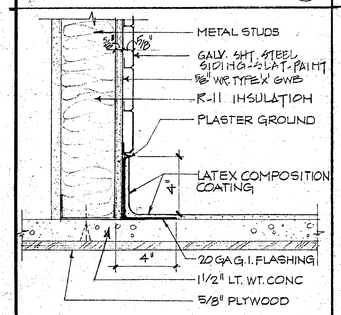

COMP. COATING BASE (4 / A-2)

SCALE: 3" = 1'-0"

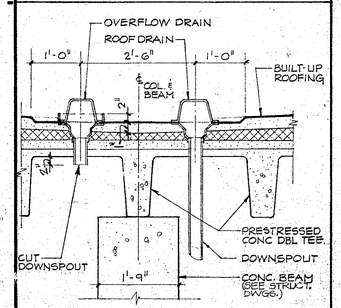

TYP. ROOF DRAIN (5 / A-2)

SCALE: 3/4" = 1'-0"

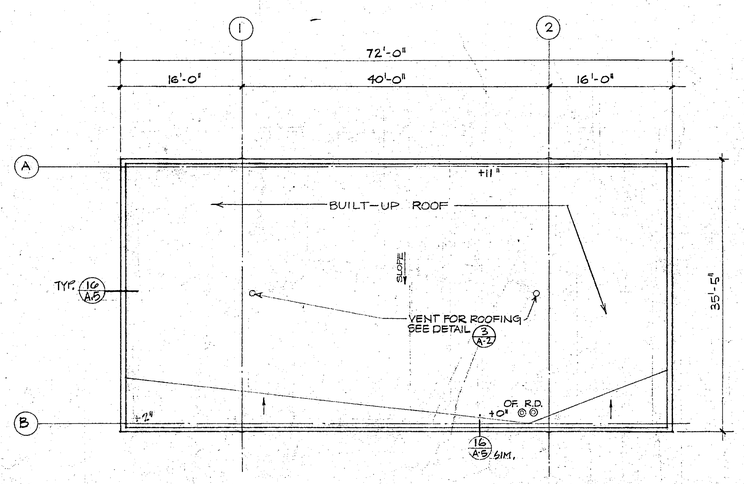

FUEL STATION ROOF PLAN

SCALE: 1/8" = 1'-0"

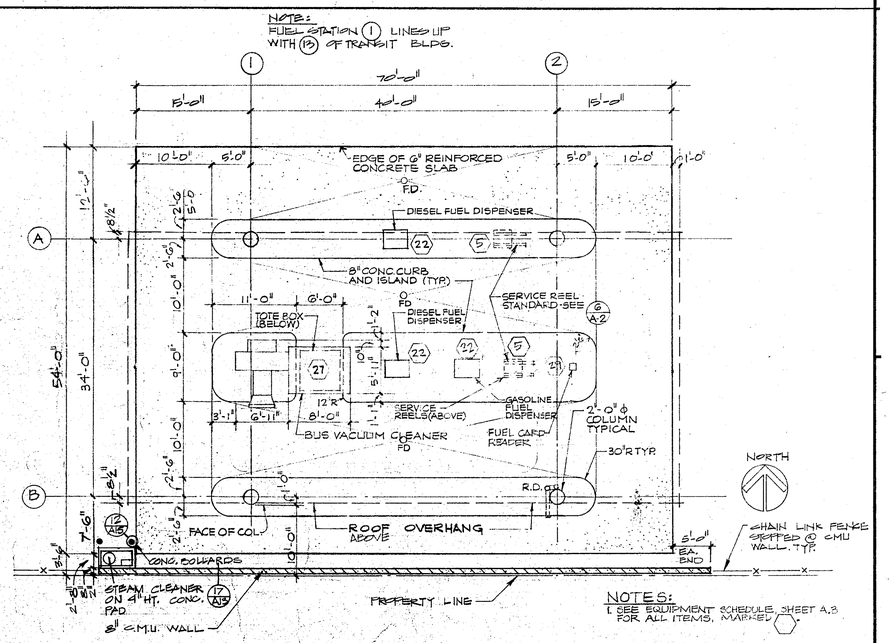

NOTES:
1. SEE EQUIPMENT SCHEDULE, SHEET A.3 FOR ALL ITEMS, MARKED ⬡

FUEL STATION PLAN

SCALE: 1/8" = 1'-0"

REVISIONS		
NO.	DATE	DESCRIPTION

HUGH GIBBS & DONALD GIBBS
Architects F.A.I.A.
3575 Long Beach Boulevard, Long Beach, California

DRAWN PR	DATE 12-16-83
CHECKED	JOB 1791

TORRANCE TRANSIT FACILITY

TORRANCE CALIFORNIA

FEDERAL PROJECT NO. CA-03-0208-01

FUEL STATION PLANS, ELEVATIONS & DETAILS

SHEET A.2

DIETERICH-POST CLEARPRINT 1020

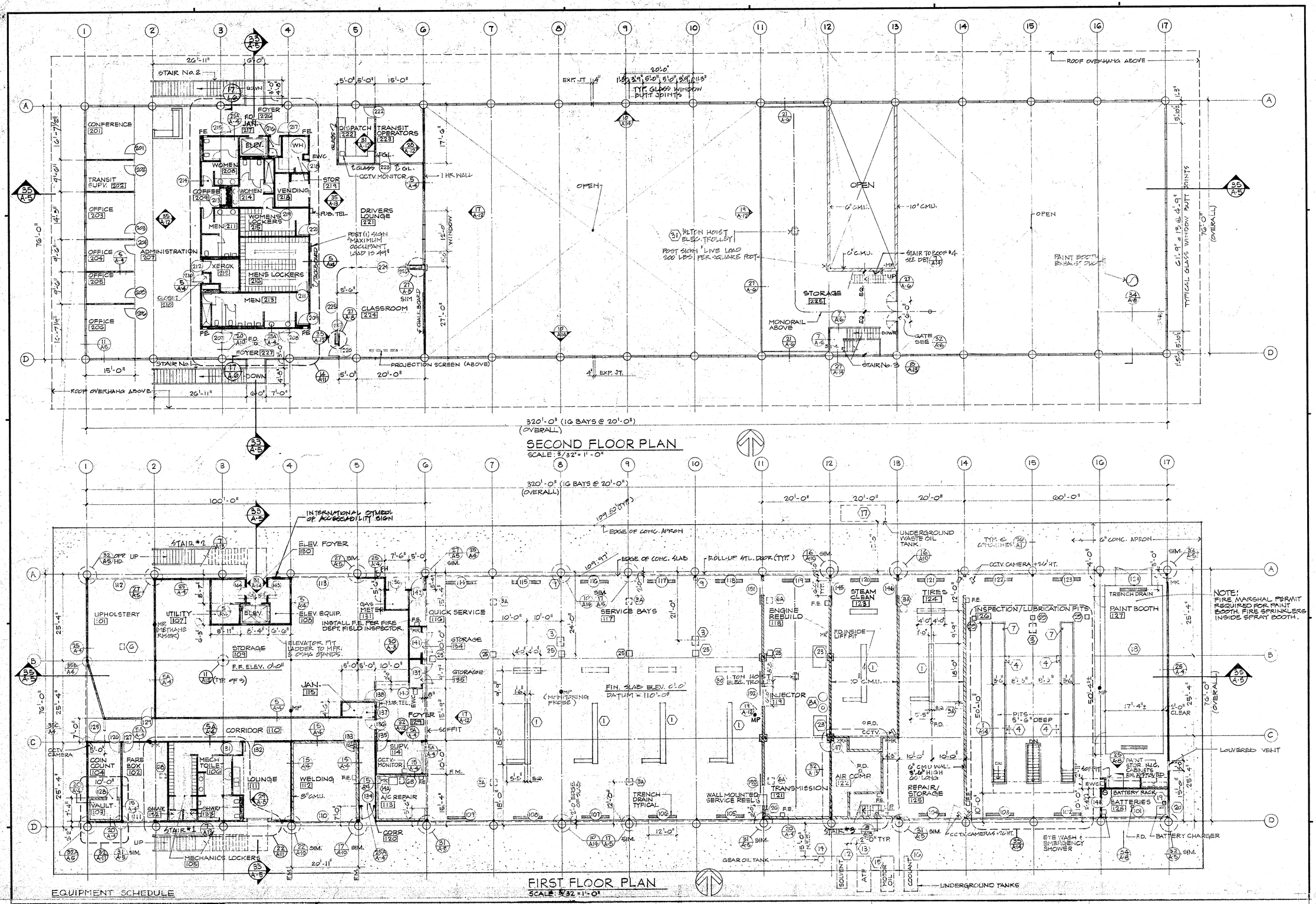

SECOND FLOOR PLAN

SCALE: 3/32" = 1'-0"

FIRST FLOOR PLAN

SCALE: 3/32" = 1'-0"

EQUIPMENT SCHEDULE

	Description
1	50,000 lb, Two Post, adjustable Wheel Base Bus Lift
2	Bus Lift Hydraulic Oil Reservoir (See enlarged Plan Detail 32/A-13)
3	Service Reels: AFT, Gear Oil, Motor Oil, Chassis Lube, Air (2 Reels), Water, Drop Light, Coolant & 120V Electric
3A	Service Reels: Air 1 -120V Electric Drop Light
4	Service Reels: Lube, Drop Light, 120V Electric, Chassis
5	Service Reels: Air, Water, ATF, Motor Oil & Coolant. (See Fuel Station Sht. A-2)
6	Service Reels: Air, Drop Light, 120V Electric
6A	Service Reels: Air & 120V Electric
6B	Service Reel: Air
7	Pit Waste Oil Drains
8	Pumps: ATF, Solvent, Gear Oil, Motor Oil and Coolant (See enlarged Plan Detail 32/A-13)
9A	Pump: Chassis Lube (with Barrels)
9	Portable Waste Oil Drains
10	Steam Cleaner/High Pressure Washer
11	Air Compressor 15 HP (See enlarged Plan Detail 32/A-13)
11A	Air Compressor Tanks (See enlarged Plan Detail 32/A-13)
11B	Air Dryer with After Cooler on top (See enlarged Plan Detail 32/A-13)
12	Solvent Storage Tank - 550 Gal.
13	Automatic Transmission Fluid Stor. Tanks 1000 Gal.
14	Gear Oil Storage Tank 550 Gal.
14A	Parts Washer
15	Motor Oil Storage Tank 1,000 Gal.
16	Coolant Storage Tank 550 Gal.
17	Waste Oil Storage Tank 2,000 Gal.
18	Paint Booth
19	Battery Rack
20	Multi Voltage Battery Charger N.I.C.
21	Underground Diesel Storage Tanks 20,000 Gal. (See Site Plan Sht A-1)
22	Fuel Dispensers (See Fuel Station Sht. A-2)
23	Parts Washers
24	Bus Wash (See Site Plan - Sht. A-1)
25	Underground Exhaust System
26	Service Reel: Solvent
27	Bus Vacuum Cleaner (See Fuel Station Sht. A-2)
28	UNDERGROUND unleaded & Regular gas stor. tanks 10,000 Gal. (See Site Plan Sht. A-1)
29	Fuel Card Reader
30	1 Ton Electric Trolley Hoist
31	1/2 Ton Electric Trolley Hoist

NOTES:
1. DATUM EL. 0'-0" = EL. 110'-0"
2. VERIFY ALL MECH., PLUMB. & ELEC. ITEMS, MARKED ⬡, W/ THEIR RESPECTIVE DWGS.
3. ALL OVERHEAD ROLLING DOORS SHALL HAVE A SIGN "DOORS SHALL REMAIN OPEN DURING BUSINESS HOURS"

REVISIONS		
NO.	DATE	DESCRIPTION

HUGH GIBBS & DONALD GIBBS
Architects A.I.A.
3575 Long Beach Boulevard, Long Beach, California

DRAWN PR/KJA	DATE 12-16-83
CHECKED	JOB 1791

TORRANCE TRANSIT FACILITY

TORRANCE CALIFORNIA

FEDERAL PROJECT NO. CA-03-0205-01

FLOOR PLANS

SHEET A-5

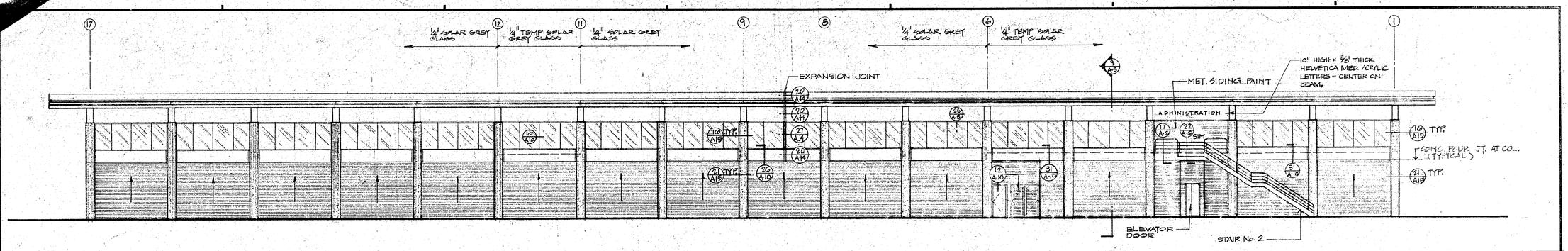

NORTH ELEVATION
SCALE: 3/32" = 1'-0"

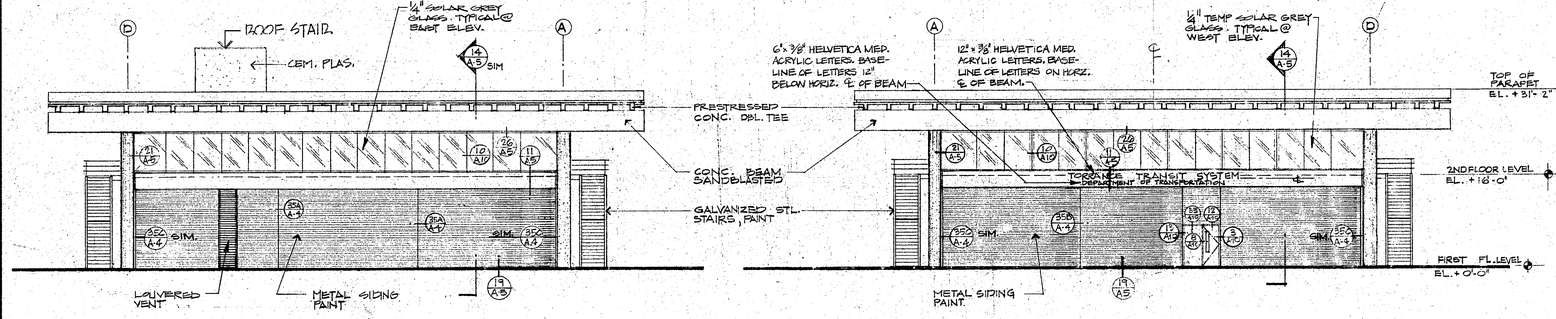

EAST ELEVATION
SCALE: 3/32" = 1'-0"

WEST ELEVATION
SCALE: 3/32" = 1'-0"

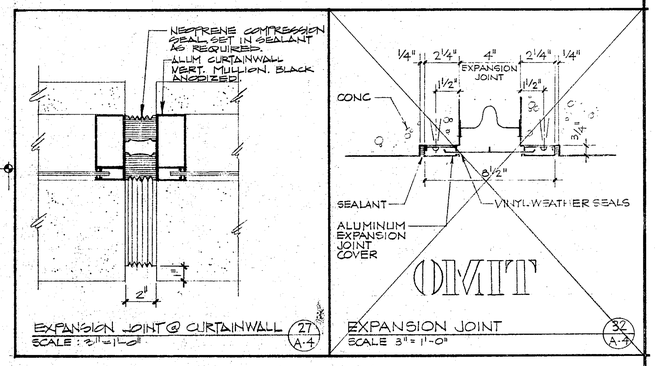

EXPANSION JOINT @ CURTAINWALL (27/A-4)
SCALE: 2" = 1'-0"

EXPANSION JOINT (32/A-4)
SCALE 3" = 1'-0"

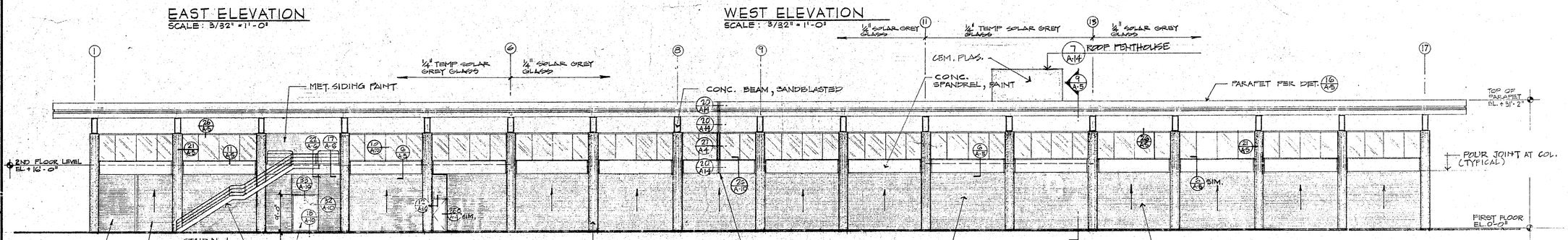

NOTES:
1. DATUM EL. 0'-0" = 115'-0"
2.

SOUTH ELEVATION
SCALE: 3/32" = 1'-0"

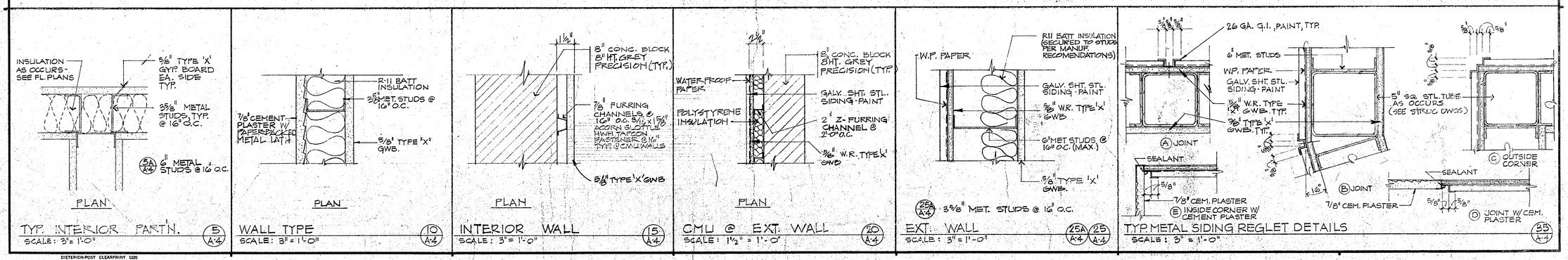

DIETERICH-POST CLEARPRINT 1020

REVISIONS		
NO.	DATE	DESCRIPTION

HUGH GIBBS & DONALD GIBBS
Architects F.A.I.A.
3575 Long Beach Boulevard, Long Beach, California

DRAWN PR	DATE 12-16-83
CHECKED	JOB 1791

TORRANCE TRANSIT FACILITY

TORRANCE
CALIFORNIA

FEDERAL PROJECT NO. CA-03-0208-01

EXTERIOR ELEV. & DETAILS

SHEET A-4

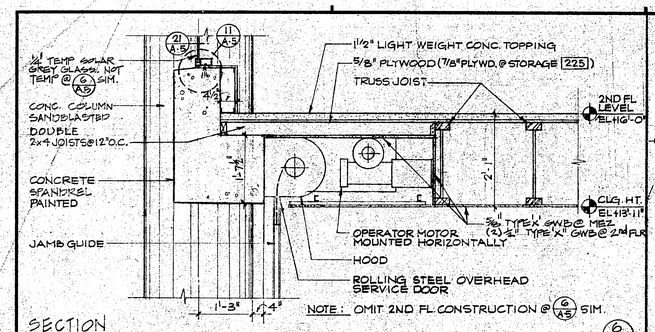

SECTION
SCALE: 3/4" = 1'-0"
6/A-5

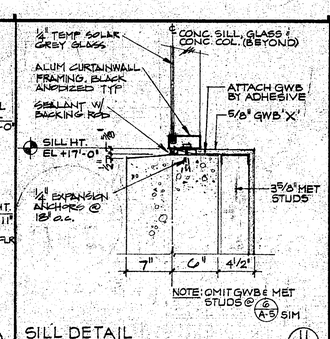

SILL DETAIL
SCALE: 1 1/2" = 1'-0"
11/A-5

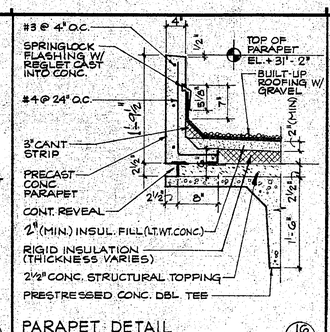

PARAPET DETAIL
SCALE: 1" = 1'-0"
16/A-5

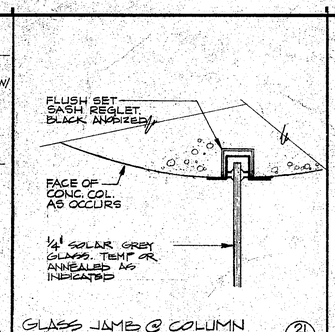

GLASS JAMB @ COLUMN
SCALE: 1/2 FULL SCALE
21/A-5

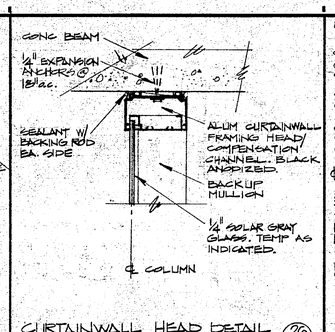

CURTAINWALL HEAD DETAIL
SCALE: 3" = 1'-0"
26/A-5

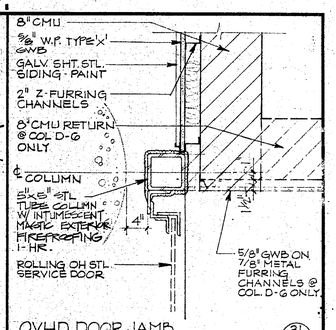

OVHD DOOR JAMB
SCALE: 1 1/2" = 1'-0"
31/A-5

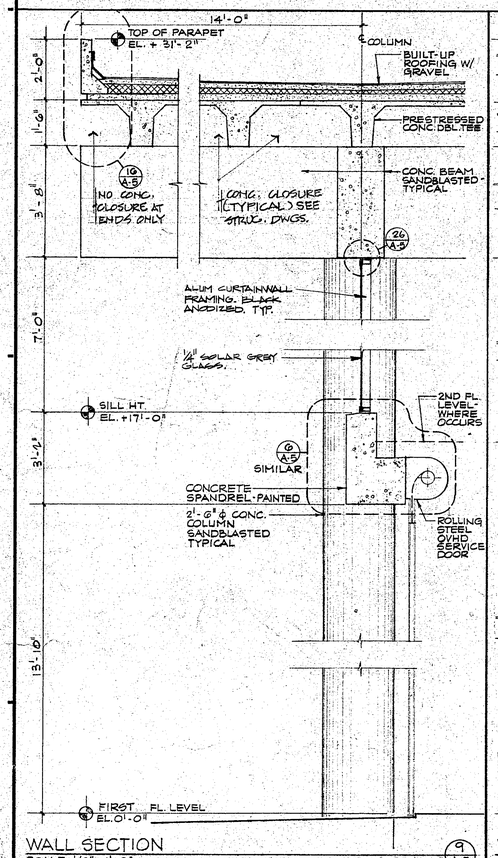

WALL SECTION
SCALE: 1/2" = 1'-0"
9/A-5

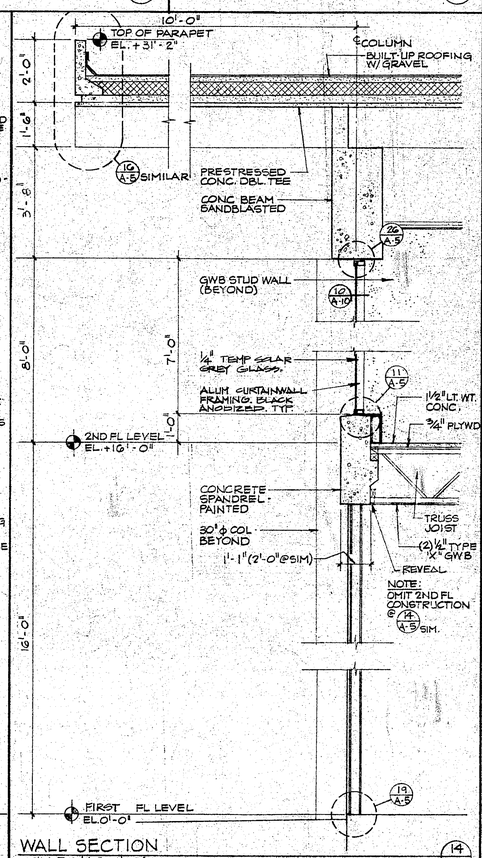

WALL SECTION
SCALE: 1/2" = 1'-0"
14/A-5

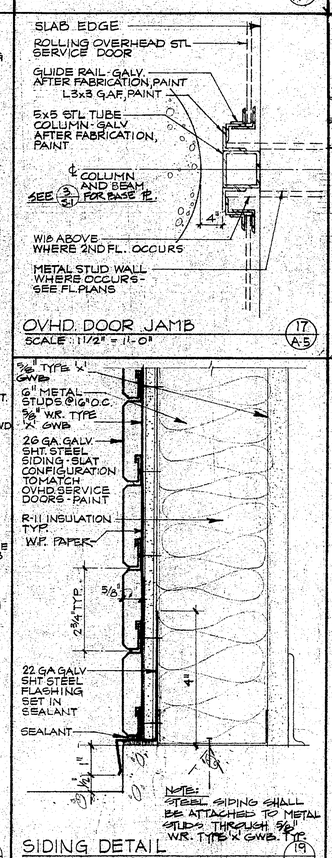

OVHD. DOOR JAMB
SCALE: 1 1/2" = 1'-0"
17/A-5

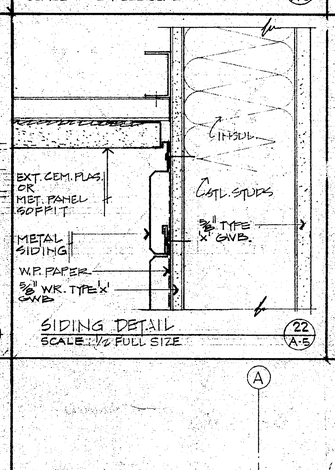

SIDING DETAIL
SCALE: 1/2 FULL SIZE
22/A-5

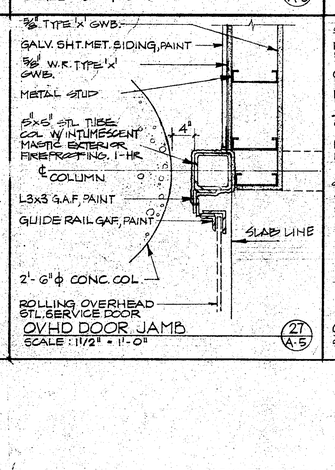

OVHD DOOR JAMB
SCALE: 1 1/2" = 1'-0"
27/A-5

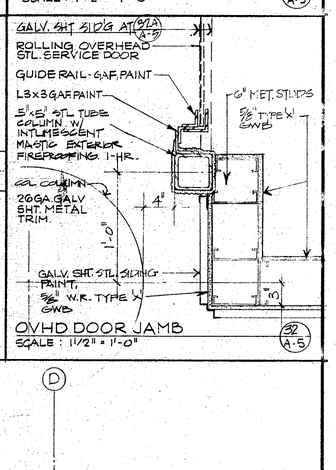

OVHD DOOR JAMB
SCALE: 1 1/2" = 1'-0"
32/A-5

SIDING DETAIL
SCALE: 1/2 FULL SCALE
19/A-5

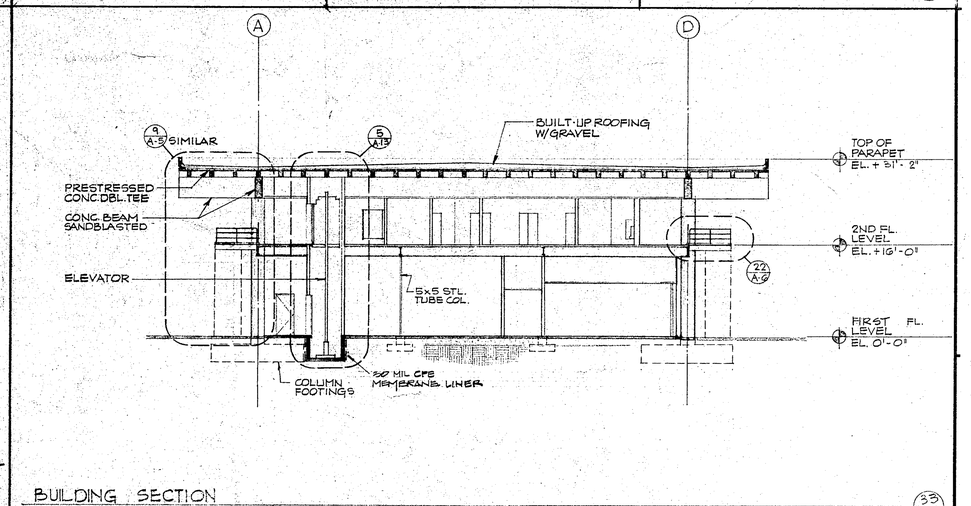

BUILDING SECTION
SCALE: 3/32" = 1'-0"
33/A-5

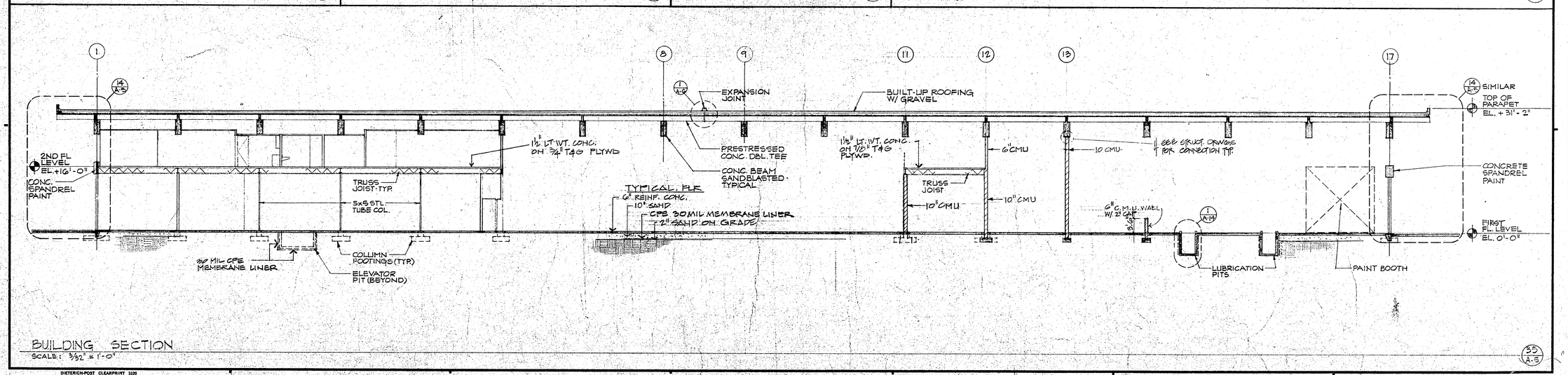

BUILDING SECTION
SCALE: 3/32" = 1'-0"
35/A-5

DIETERICH-POST CLEARPRINT 1020

REVISIONS		
NO	DATE	DESCRIPTION

REGISTERED ARCHITECT DONALD GIBBS STATE OF CALIFORNIA

HUGH GIBBS & DONALD GIBBS
Architects F.A.I.A.
3575 Long Beach Boulevard, Long Beach, California

DRAWN PR/KJA	DATE 12-16-83
CHECKED	JOB 1791

TORRANCE TRANSIT FACILITY

TORRANCE
CALIFORNIA

FEDERAL PROJECT NO.
CA-03-0203-01

BUILDING SECTIONS
WALL SECTIONS &
DETAILS

SHEET A.5

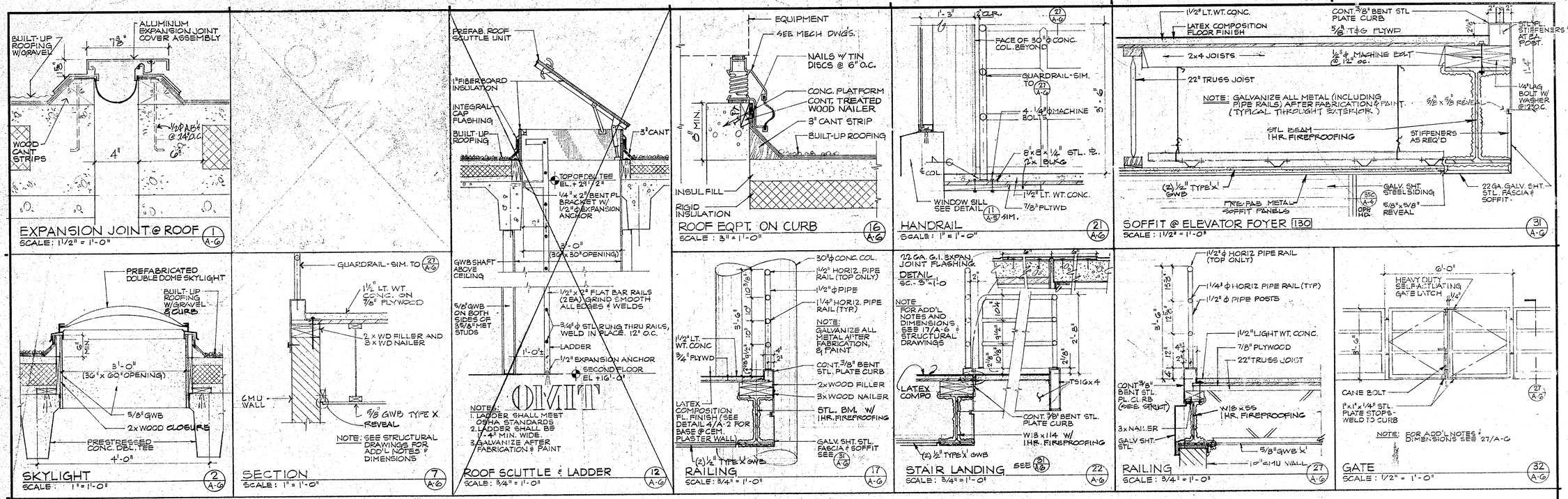

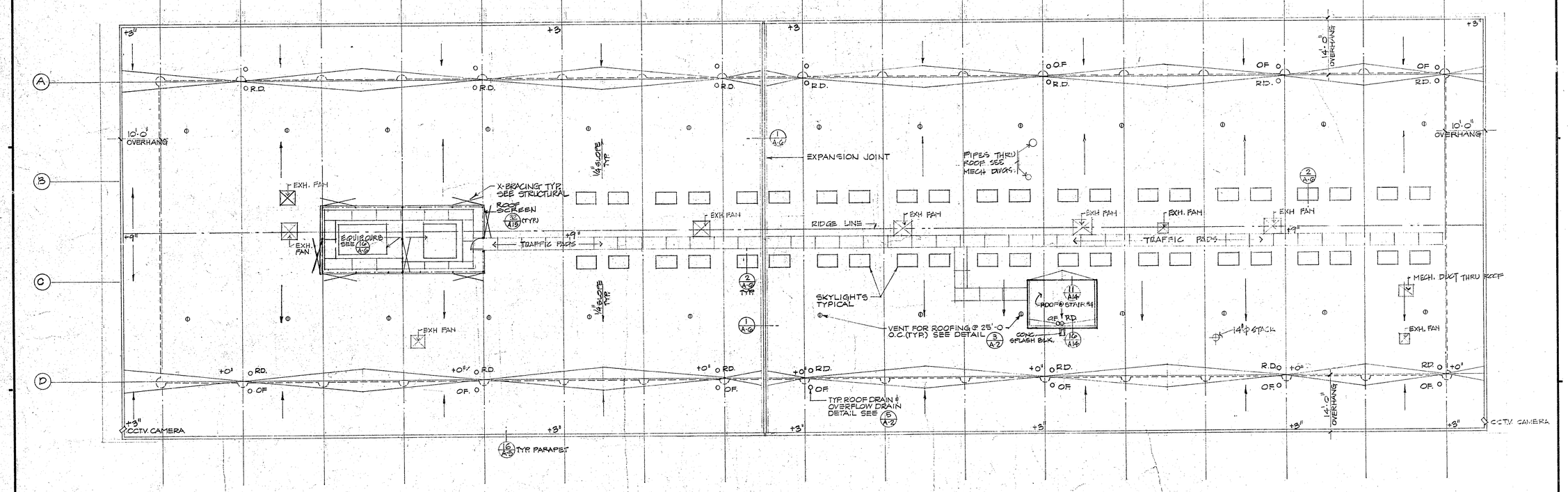

REVISIONS		
NO	DATE	DESCRIPTION

HUGH GIBBS & DONALD GIBBS
Architects F.A.I.A.
3575 Long Beach Boulevard, Long Beach, California

DRAWN PR	DATE 12-16-83
CHECKED	JOB 1791

TORRANCE TRANSIT FACILITY

TORRANCE CALIFORNIA

FEDERAL PROJECT NO. CA-03-0208-1

ROOF PLAN DETAILS.

SHEET A-6

DIETERICH-POST CLEARPRINT 1020

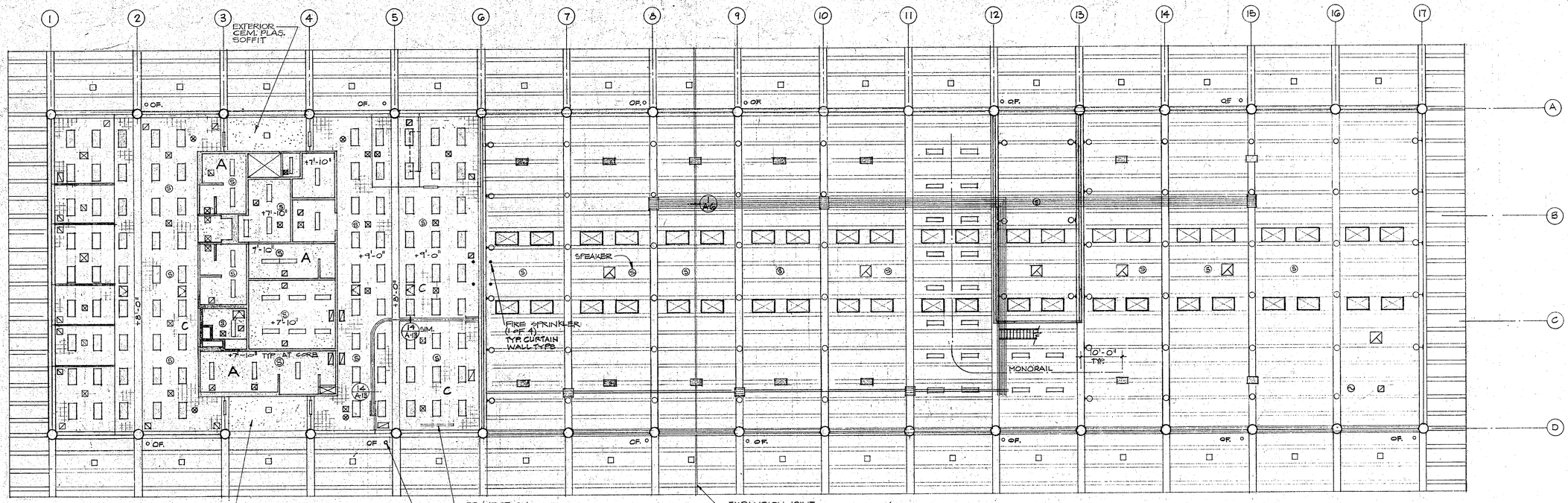

SECOND FLOOR REFLECTED CEILING PLAN

SCALE: 3/32" = 1'-0"

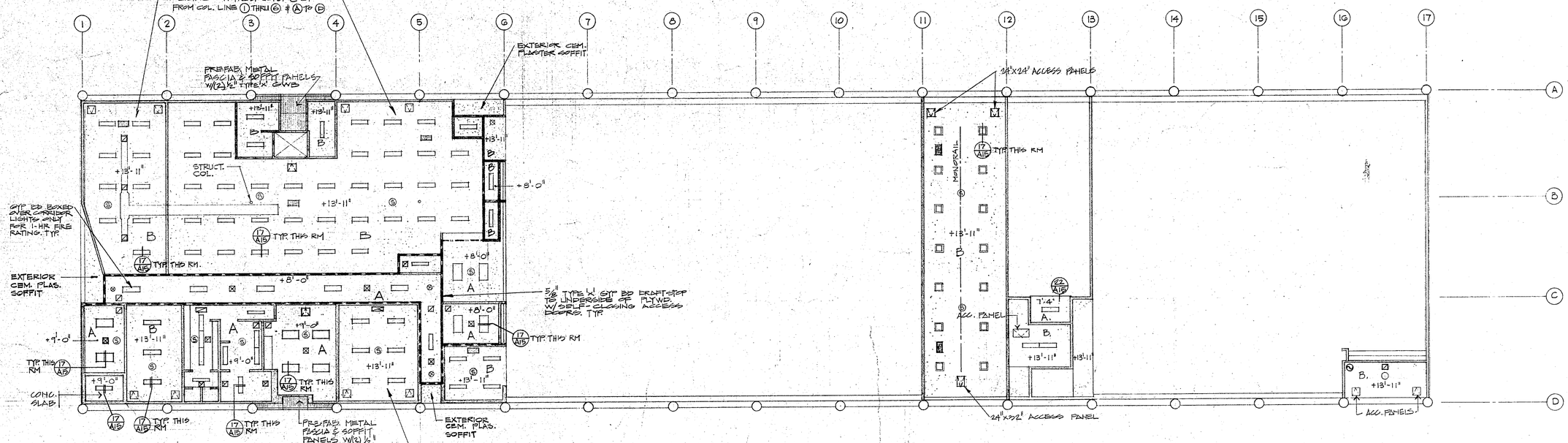

FIRST FLOOR REFLECTED CEILING PLAN

SCALE: 3/32" = 1'-0"

LEGEND

- SUPPLY AIR
- RETURN AIR
- EXHAUST FAN
- WALL MTD. FIXTURE
- SPEAKER
- EXIT LIGHT
- DOWNLIGHT
- ACCESS PANEL (1-HR RATED BOTH CEILINGS TYP.)
- A SUSPENDED GYPSUM BOARD
- B GYPSUM BOARD ATTACHED TO OR SUSPENDED FROM.
- C ACOUSTICAL TILE (GLUED TO GYP. BOARD)
- LIGHT FIXTURE
- EXTERIOR LIGHT FIXTURE
- UNIT HEATER
- OVERFLOW DRAIN (O.F.)
- SERVICE REEL BELOW

REVISIONS		
NO	DATE	DESCRIPTION

REGISTERED ARCHITECT DONALD GIBBS STATE OF CALIFORNIA

HUGH GIBBS & DONALD GIBBS
Architects F.A.I.A.
3575 Long Beach Boulevard, Long Beach, California

DRAWN PR	DATE 12-16-83
CHECKED	JOB 1791

TORRANCE TRANSIT FACILITY

TORRANCE
CALIFORNIA

FEDERAL PROJECT NO. CA-03-0208-01

REFLECTED CEILING PLANS

SHEET A1 REV

DIETERICH-POST CLEARPRINT 1020

TYPES

SYM	MATERIAL
AL	ALUMINUM
AT	ACOUSTIC TILE
CC	COMPOSITION COATING
CMU	CONCRETE MASONRY UNITS
CPT	CARPET N.I.C.
CONC	CONCRETE
CS	CONCRETE SEALER
CT	CERAMIC TILE
CPL	CEMENT PLASTER
EE	EGGSHELL ENAMEL
FH	FLOOR HARDENER
FF	FACTORY FINISH
FLX	FLAT LATEX
GALV	GALVANIZED
EP	EPOXY PAINT
GSF	GLASS IN STEEL FRAME
GWB	GYPSUM WALL
PLAM	PLASTIC LAMINATE
RB	RUBBER BASE
STL	STEEL
VAT	VINYL ASBESTOS TILE

INTERIOR FINISH SCHEDULE

LEVEL	RM NO	SPACE NAME	FLOOR MATL	FLOOR FIN	BASE MATL	BASE FIN	WALLS NORTH MATL	WALLS NORTH FIN	WALLS EAST MATL	WALLS EAST FIN	WALLS SOUTH MATL	WALLS SOUTH FIN	WALLS WEST MATL	WALLS WEST FIN	CEILING MATL	CEILING FIN	CEILING HGT	DR & FR DR FIN	DR & FR FR FIN	WOOD FR FIN	DIFF DIFFUSER GRILLES	FIX. TRIM	REMARKS
1ST FLOOR	101	UPHOLSTERY	CONC	FH	RB	-	DOOR	EE	GWB	EE	GWB	EE	GWB	EE	GWB	EE	13'-11"	EE	EE	-			
	102	FARE BOX	CONC	FH	RB	-	GWB	EE	GWB	EE	DOOR	EE	GWB	EE	GWB	EE	13'-11"	EE	EE	-			
	103	VAULT	VAT	FF	RB	-	CMU	EP	CMU	EP	CMU	EP	CMU	EP	CONC	EE	9'-4"	FF	FF	-			
	104	COIN COUNT	VAT	FF	RB	-	GWB	FLX	GWB	FLX	GWB	FLX	GWB	FLX	GWB	FLX	9'-0"	EE EP	EE EP	-			R-19 CEILING INSULATION
	105	MECHANIC'S LOCKER	CONC	CT	CT	-	CT	FF	CT	FF	CT	FF	CT	FF	GWB	EE	9'-0"	-	-	-			
	106	MECHANIC'S TOILET	CONC	CT	CT	-	CT	FF	CT	FF	CT	FF	CT	FF	GWB	EE	9'-0"	EE	EE	-			R-19 @ CEILING
	107	UTILITY	CONC	CS	RB	-	GWB	EE	GWB	EE	GWB	EE	GWB	EE	GWB	EE	13'-11"	EE	EE	-			
	108	ELEVATOR EQUIP	CONC	CS	RB	-	GWB	EE	GWB	EE	GWB	EE	GWB	EE	GWB	EE	13'-11"	EE	EE	-			
	109	STORAGE	CONC	FH	RB	-	GWB	EE	GWB	EE	GWB	EE	GWB	EE	GWB	EE	13'-11"	EE	EE	-			
	110	CORRIDOR	VAT	FF	RB	-	GWB	EE	GWB	EE	GWB	EE	GSF	EE	GWB	EE	8'-0"	EE	EE	EE			
	111	LOUNGE	VAT	FF	RB	-	GWB	EE	GWB	EE	GSF GWB	EE	GWB	EE	GWB	FLX	9'-0"	EE	EE	EE			R-19 @ CEILING
	112	WELDING	CONC	FH	CT	-	CMU	EP	CMU	EP	DOOR	EE	CMU	EP	GWB	EE	13'-11"	EE	EE	-			
	113	A/C REPAIR	CONC	FH	RB	-	CMU	EP	DOOR	EE	CMU	EP	CMU	EP	GWB	EE	13'-11"	-	-	-			
	114	SUPERVISOR	VAT	FF	RB	-	GSF GWB	EE FLX	GSF GWB	EE FLX	GWB	FLX	GWB	FLX	GWB	FLX	8'-0"	EE	EE	EE			
	115	JANITOR	CONC	CS	CT	-	GWB	EE	GWB	EE	GWB	EE	GWB	EE	GWB	EE	9'-0"	EE	EE	-			
	116	QUICK SERVICE	CONC	FH	CT	-	DOOR	EE	OPEN	-	DOOR	EE	GSF GWB	EE	CONC	-	27'-6"	EE	EE	EE			
	117	SERVICE BAYS	CONC		-	-	DOOR	EE	OPEN	-	DOOR	EE	OPEN	-	CONC	-	27'-6"	EE	EE	-			
	118	ENGINE REBUILD.	CONC		-	-	DOOR	EE	CMU	EP	OPEN	-	CMU	EP	GWB	EE	13'-11"	EE	EE	-			
	119	INJECTOR	CONC		-	-	OPEN	-	CMU	EP	OPEN	-	CMU	EP	GWB	EE	13'-11"	EE	EE	-			
	120	CORRIDOR	CONC		RB	-	OPEN	-	GWB	EE	GWB	EE	GWB	EE	GWB	EE	8'-0"	EE	EE	-			
	121	TRANSMISSION	CONC		-	-	OPEN	-	CMU	EP	CMU	EP	CMU	EP	GWB	EE	13'-11"	EE	EE	-			
	122	AIR COMPRESSOR	CONC		-	-	CMU	-	CMU	EP	CMU	EP	CMU	EP	GWB	EE	13'-11"	EE	EE	-			
	123	STEAM CLEAN	CONC		-	-	DOOR	EE	CMU	EP	CMU	EP	CMU	EP	CONC	EE	27'-6"	EE	EE	-			
	124	TIRES	CONC		-	-	DOOR	EE	CMU	EP	OPEN	-	CMU	EP	CONC	-	27'-6"	EE	EE	-			
	125	REPAIR/STORAGE	CONC		-	-	OPEN	-	CMU	EP	DOOR	FF	CMU	EP	CONC	-	27'-6"	EE	EE	-			
	126	INSPECTION/LUBE PITS	CONC		-	-	DOOR	EE	OPEN	-	DOOR	FF	CMU	EP	CONC	-	27'-6"	EE	EE	-			
	127	PAINT BOOTH	CONC			-	DOOR	EE	GWB	EE	GWB	EE	OPEN	-	CONC	-	27'-6"	EE	EE	-			
	128	BATTERIES	CONC		CT	-	GWB	EE	GWB	EE	DOOR	FF	GWB	EE	GWB	EE		EE	EE	-			
	129	FOYER	CONC		-	-	GWB	EE	OPEN	-	GWB	EE	GWB	EE	GWB	EE	8'-0"	-	-	-			
	130	ELEVATOR FOYER	CONC		-	-	OPEN	-	STL	EE	STL	EE	STL	EE	STL	EE	13'-11"	EE	EE				
	131	GAS METER	CONC	✓	-	-	GWB	EE	GWB	EE	GWB	EE	GWB	EE	GWB	EE	13'-11"	EE	EE				
	132	SHOWER	CONC	CS	CT	-	CT	FF	CT	FF	CT	FF	CT	FF	GWB	EE	8'-0"	EE	EE	-			
	133	SHOWER	CONC	CS	CT	-	CT	FF	CT	FF	CT	FF	CT	FF	GWB	EE	8'-0"	EE	EE	-			
	134	STORAGE	VAT	FF	RB	F	GWB	EE	GWB	EE	GWB	EE	GWB	EE	GWB	EE	8'-0"	PLAM		EE			
	135	STORAGE	VAT	FF	RB	F	GWB	EE	GWB	EE	GWB	EE	GWB	EE	GWB	EE	8'-0"	PLAM					
2ND FLOOR	201	CONFERENCE	CPT	FF	RB	FF	GAF	EE	GSF	EE	GWB	FLX	GSF	EE	AT	FF	9'-0"	PLAM					
	202	TRANSIT SUPV.	CPT	FF	RB	FF	GWB	FLX	GSF	EE	GWB	FLX	GSF	EE	AT	FF							
	203	OFFICE	CPT	FF	RB	FF	GWB	FLX	GSF	EE	GWB	FLX	GSF	EE	AT	FF							
	204	OFFICE	CPT	FF	RB	FF	GWB	FLX	GSF	EE	GWB	FLX	GSF	EE	AT	FF							
	205	OFFICE	CPT	FF	RB	FF	GWB	FLX	GSF	EE	GWB	FLX	GSF	EE	AT	FF							
	206	OFFICE	CPT	FF	RB	FF	GWB	FLX	GSF	EE	GSF	EE	GSF	EE	AT	FF							
	207	ADMINISTRATION	CPT	FF	RB	FF	GSF	EE	GWB	FLX	GSF	EE	GSF	EE	AT	FF							
	208	WOMEN'S TOILET	CT	FF	CT	FF	CT	FF	CT	FF	CT	FF	CT	FF	GWB	EE	7'-10"	PLAM					
	209	COFFEE	CPT	FF	RB	FF	GWB	FLX	GWB	FLX	GWB	FLX	OPEN	-	GWB	FLX	7'-10"	PLAM					
	210	CLOSET	CPT	FF	RB	FF	GWB	FLX	GWB	FLX	GWB	FLX	GWB	FLX	GWB	FLX	9'-0"	PLAM					
	211	MEN'S TOILET	CT	FF	CT	FF	CT	FF	CT	FF	CT	FF	CT	FF	GWB	EE	7'-10"	PLAM					
	212	XEROX	VAT	FF	RB	FF	GWB	FLX	GWB	FLX	GWB	FLX	GWB	FLX	GWB	FLX		PLAM					
	213	MEN'S TOILET	CT	FF	CT	FF	CT	FF	CT	FF	CT	FF	CT	FF	GWB	EE		PLAM					
	214	WOMEN'S TOILET	CT	FF	CT	FF	CT	FF	CT	FF	CT	FF	CT	FF	GWB	EE		PLAM					
	215	WOMEN'S LOCKERS	CT	FF	CT	FF	GWB	EE	GWB	EE	GWB	EE	GWB	EE	GWB	EE		PLAM					
	216	MEN'S LOCKERS	CT	FF	CT	FF	GWB	EE	GWB	EE	GWB	EE	GWB	EE	GWB	EE		PLAM					
	217	JANITOR	CONC	CS	CT	FF	GWB	EE	GWB	EE	GWB	EE	GWB	EE	GWB	EE		PLAM					
	218	VENDING	VAT	FF	RB	FF	GWB	EE	GWB	EE	GWB	EE	GWB	EE	GWB	FLX		-					
	219	STORAGE	VAT	FF	RB	FF	GWB	EE	GWB	EE	GWB	EE	GWB	EE	GWB	FLX		PLAM					
	221	DRIVER'S LOUNGE	CPT	FF	RB	FF	GSF	FF	GSF GWB	EE FLX	-	-	GWB	FLX	AT	FF	9'-0"	PLAM					
	222	DISPATCH	CPT	FF	RB	FF	GSF	FF	GSF	FF	GSF	FF	GSF	FF	AT	FF		PLAM					
	223	TRANSIT OPERATORS	CPT	FF	RB	FF	GSF	FF	GWB	FLX	GSF	FF	GSF	FF	AT	FF		PLAM					
	224	CLASSROOM	CPT	FF	RB	FF	-	-	GWB	FLX	GSF	FF	-	-	AT	FF		PLAM	✓	✓			
	225	STORAGE	VAT	FF	RB	FF	GSF	FF	CMU	EP	GSF	FF	OPEN	-	CONC	FF	11'-6"	-	-	-			
	226	FOYER	CONC	CC	-	CC	OPEN	-	GSF	EE	STL	EE	GSF	EE	CPL	FLX	9'-0"	GSF	EE	-			
	227	FOYER	CONC	CC	-	CC	STL	EE	GSF	EE	OPEN	-	GSF	EE	CPL	FLX	9'-0"	GSF	EE	-			
ROOF	301	ROOF PENTHOUSE	CONC	CS	RB	FF	GWB	EE	GWB	EE	GWB	EE	GWB	EE	GWB	EE	—	EE	EE	—			

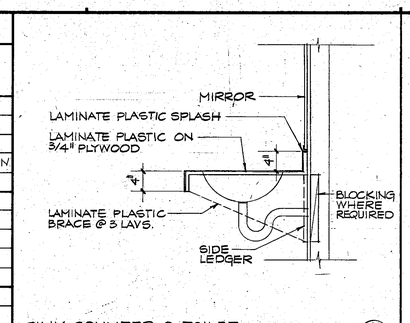

SINK COUNTER @ TOILET — 21 A-8
SCALE: 1" = 1'-0"

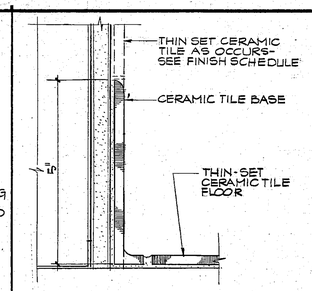

CERAMIC TILE BASE — 26 A-8
SCALE: 1/2 FULL SCALE

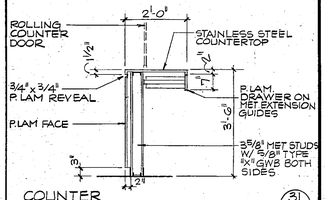

COUNTER — 31 A-8
SCALE: 1/2" = 1'-0"

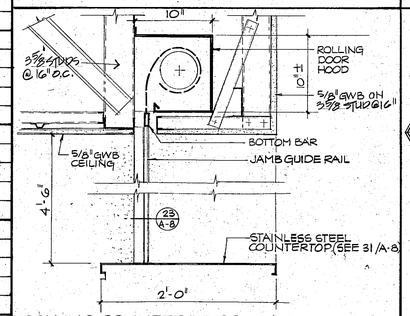

ROLLING COUNTER DOOR — 22 A-8
SCALE: 1 1/2" = 1'-0"

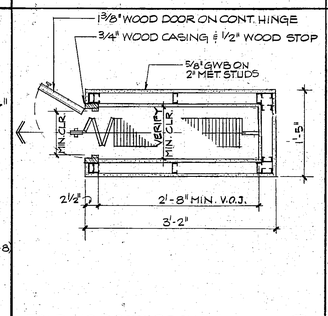

FOLDING DOOR POCKET — 27 A-8
SCALE: 1" = 1'-0"

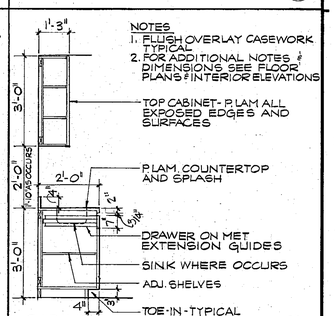

CABINET — 32 A-8
SCALE: 1/2" = 1'-0"

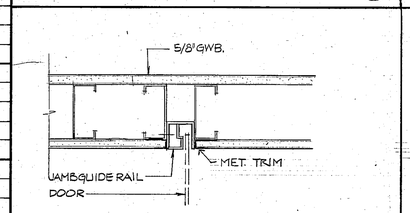

JAMB — 28 A-8
SCALE: 3" = 1'-0"

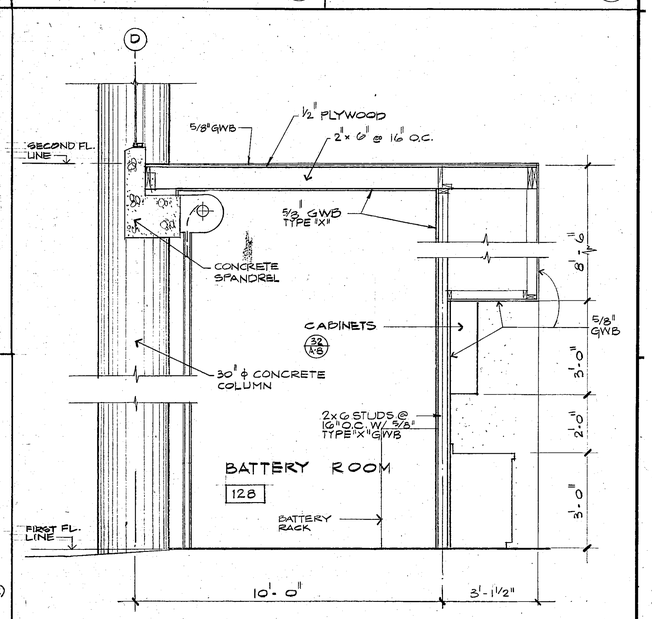

NOTE:
EQUIVALENT STEEL FRAMING MEMBERS MAY BE USED

WALL SECTION — 34 A-8
SCALE: 1/2" = 1'-0"

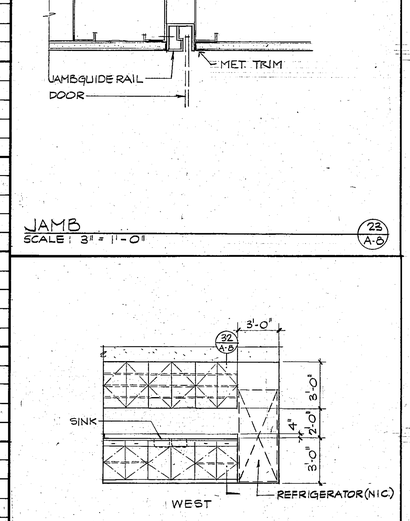

LOUNGE 111 — 24 A-8
SCALE: 1/4" = 1'-0"

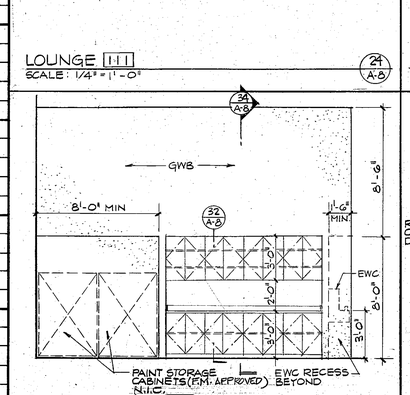

PAINT BOOTH 127 — 25 A-8
SCALE: 1/4" = 1'-0"

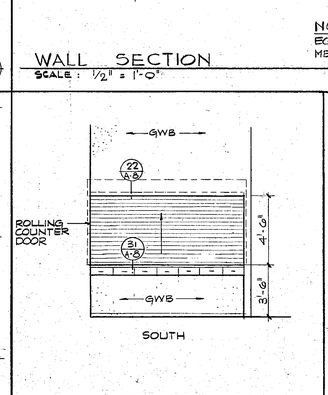

STORAGE 109 — 30 A-8
SCALE: 1/4" = 1'-0"

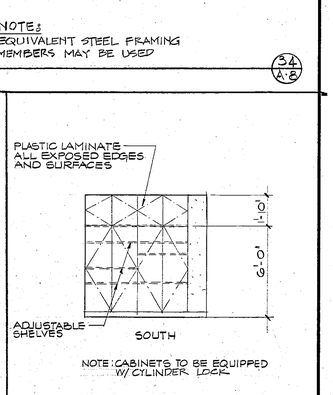

NOTE: CABINETS TO BE EQUIPPED W/ CYLINDER LOCK

XEROX 212 — 35 A-8
SCALE: 1/4" = 1'-0"

REVISIONS		
NO	DATE	DESCRIPTION

HUGH GIBBS & DONALD GIBBS
Architects F.A.I.A.
3575 Long Beach Boulevard, Long Beach, California

DRAWN PR/KJA	DATE 12-16-83
CHECKED	JOB 1791

TORRANCE TRANSIT FACILITY

TORRANCE CALIFORNIA

FEDERAL PROJECT NO. CA-03-0208-01

INTERIOR FINISH SCHEDULE AND DETAILS

SHEET A.8

11/78 DIETERICH-POST CLEARPRINT 1020

DOOR TYPES

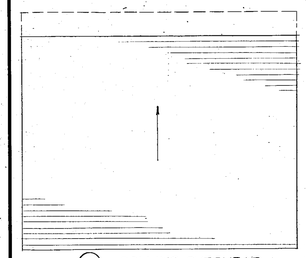

(A) ROLLING OVERHEAD SERVICE DOOR

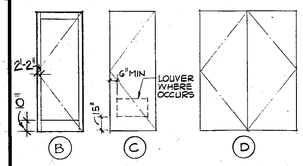

(B) (C) (D)

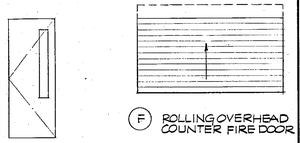

(F) ROLLING OVERHEAD COUNTER FIRE DOOR

(E)

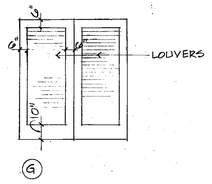

(G)

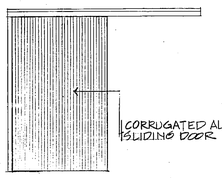

(H)

NOTE:

DOORS TO BE OPERABLE FROM INSIDE WITHOUT A KEY OR ANY SPECIAL KNOWLEDGE.

DOOR AND FRAME SCHEDULE

LEVEL	OPENING: DR NO	OPENING: RM NO	OPENING: SIZE WIDTH & HEIGHT	DOOR: THK	DOOR: TYPE	DOOR: MATERIAL FACE	DOOR: MATERIAL CORE	DOOR: MATERIAL GLASS	FR: MATL	DETAIL: HEAD	DETAIL: JAMB	DETAIL: JAMB	DETAIL: THRESH		FIRE: LABEL	HDW: NO		REMARKS
	101	128	18'-0" x 14'-0"	–	A	STL	–	–	STL	3A/A-8	17/A-5	32/A-5	–		–	1		
	102	126	19'-0" x 14'-0"	–			–	–		26/A-10		17/A-5			–			
	103	126		–			–	–				16/A-10			–			
	104	117		–			–	–			31/A-5	16/A-10			–			
	105	117		–			–	–			17/A-5	31/A-5			–			
	106	117		–			–	–				17/A-5			–			
	107	117		–			–	–				17/A-5			–			
	108	117		–			–	–				17/A-5			–			
	109	116		–			–	–				3/A-5			–			
	110	112	19'-0" x 14'-0"	–	A	STL	–	–	STL	6/A-5	17/A-10	22/A-10			–			
	111	102	9'-0" x 14'-0"	–	A	STL	–	–	STL		27/A-5	31/A-5			–			
	112	101	18'-0" x 14'-0"	–			–	–				32/A-5			–			
	113	109	19'-0" x 14' 0"	–			–	–				27/A-5			–			
	114	116	18'-0" x 14' 0"	–			–	–		26/A-10	17/A-5	32/A-5			–			
	115	117	19'-0" x 14' 0"	–			–	–				17/A-5			–			
	116	117		–			–	–							–			
	117	117		–			–	–							–			
	118	117		–			–	–							–			
	119	118		–			–	–		6/A-5		16/A-10			–			
	120	123		–	A	STL	–	–	STL	26/A-10	16/A-10				–			
	121	124		–	A	STL	–	–	STL						–			
	122	126		–			–	–			17/A-5				–			
	123	126		–			–	–				17/A-5			–			
	124	127	18'-0" x 14'-0"	–			–	–				32/A-5			–			
	125	110	3'-0" x 7'-10"	1¾"	E		HC	1/4 WIRE		12/A-10	3/A-10	8/A-10 3/A-10	4/A-10		C	2		
	126	102			C			–		1A/A-10	2A/A-10	2A/A-10				3		
	127	104						–								3		
	128	103	3'-4" x 6'-6"					–		24/A-10	25/A-10	25/A-10	24/A-10			4		VAULT DOOR
	129	101	3'-0" x 7'-0",	1¾	C	STL	HC	–		1/A-10	2/A-10	2/A-10			C	3A		
	131	106	3'-0" x 7'-10"	1¾	C	STL	HC	–	STL	1A/A-10	2A/A-10	2A/A-10			C	6		12" PLAS. LAM. △ @ 60"
	132	111						–								6		
	133	112						–		27/A-10	27/A-10	27/A-10				3A		
	134	120	3'-4" x 7'-10"		E			1/4 WIRE		12/A-10	7B/A-10	7B/A-10	4/A-10			2		
	135	114	3'-0 x 7'-10"		C			–		1A/A-10	2A/A-10	8/A-10			–	8		
	136	116			E	STL	HC	1/4 WIRE	STL	1/A-10	2/A-10	2/A-10			C	7		
	137	115			C			–		1A/A-10	2A/A-10	2A/A-10				9		UNDERCUT 1"
	138	109						–		1/A-10	2/A-10	2/A-10				3		
	139		6'-0" x 7'-10"		D			–							–	10		
	140		8'-0" x 4'-6"		F			–		22/A-8	23/A-8	23/A-8			C	1		ROLLING COUNTER DOOR
	141		6'-0" x 7'-10"	1¾	D	STL	HC	–	STL	1/A-10	2/A-10	2/A-10			–	10		
	142	116	3'-4" x 7'-10"		E			1/4 PLATE		12/A-10	7B/A-10	7B/A-10	4/A-10		–	2		
	143	108	3'-0" x 7'-10"		C			–		7A/A-10	7A/A-10	12A/A-10	4/A-10		–	11		6x12" LOUVER
	144	107						–		7A/A-10	7A/A-10	12A/A-10	4/A-10		–	11		6x12" LOUVER
	145	123	6'-0" x 10'-0"	3⅝	H	AL	–	–		6/A-10	11/A-10	–			–	1		AL SLIDING DOOR
	146	123	6'-0" x 10'-0"	3⅝	H	AL	–	–		6/A-10	11/A-10	–			–	1		AL SLIDING DOOR
	147	122	3'-8" x 7'-10"	1¾	C	STL	HC	–	STL	23/A-10	23/A-10	23/A-10			–	9		DR. BOTTOM & FRAME SEALS
	148	128						–		1A/A-10	2A/A-10	2A/A-10			C	3		
	149		3'-6" x 7'-0"	–	–	S. STL	–	–	S. STL	9/	9/	9/A13	15/A13		–	–		ELEVATOR DOOR
	150	131	6'-8" x 7'-10"	1¾	G	STL		–	STL.	12A/A10	7A/A-10	7A/A10			–	5		
	151	118	6'-0" x 10'-0"	3⅝	H	AL	–	–		6/A10	11/A10	–			–	1		
	152	119	6'-0" x 10'-0"	3⅝	H	AL	–	–		6/A10	11/A10	–			–	1		
	153	121	6'-0" x 10'-0"	3⅝	H	AL	–	–		6/A10	11/A10	–			–	1		

DOOR AND FRAME SCHEDULE

LEVEL	OPENING: DR NO	OPENING: RM NO	OPENING: SIZE WIDTH & HEIGHT	DOOR: THK	DOOR: TYPE	DOOR: MATERIAL FACE	DOOR: MATERIAL CORE	DOOR: MATERIAL GLASS	FR: MATL	DETAIL: HEAD	DETAIL: JAMB	DETAIL: JAMB	DETAIL: THRESH		FIRE: LABEL	HDW: NO		REMARKS
	201	201	3'-0" x 8'-10"	1¾	C	PLAM	SC	–	STL	15/A-10	9/A-10	9/A-10			–	13		
	202	202	3'-0" x 8'-10"					–							–	8		
	203	203						–							–	8		
	204	204						–							–	8		
	205	205						–							–	8		
	206	206						–							–	8		
	207	207	3'-0" x 7'-10"		B	STL	–	¼" TEMP	STL	15/A-10	9/A-10	9/A-10			–	14		
	208	221			B	STL	–	¼" TEMP		15/A-10					–	14		
	209	213	3'-0" x 7'-8"		C	PLAM	SC	–		1/A-10	2/A-10	2/A-10			–	12		12" PLAS. LAM. △ @ 5'-0" HT.
	210	210	3'-0" x 7'-8"		C	PLAM	SC	–		1/A10	2/A10	2/A10			–	9		
	211	216	3'-0" x 7'-8"	1¾	C	PLAM	SC	–	STL	1/A-10	2/A-10	2/A-10			–	12		
	212	212						–							–	13		
	213	211						–							–	12		12" PLAS. LAM △ @ 5'-0" HT.
	214	208						–							–	12		12" φ PLAS. LAM. ○ AT 5'-0" HT.
	215	207	3'-0" x 7'-10"		B	STL	–	¼" TEMP		15/A-10	9/A-10	9/A-10			–	15		
	216	217	3'-0" x 7'-8"		C	STL	HC	–		17/A-10	7/A-10	7/A-10			–	9		UNDER CUT 1"
	217	221	3'-0" x 7'-10"		B	STL	–	¼" TEMP		15/A-10	9/A-10	9/A-10			–	15		
	218	219	3'-0" x 7'-8"		C	PLAM	SC	–		1/A-10	2/A-10	2/A-10			–	9		
	219	214						–							–	12		
	220	224	3'-0" x 7'-10"					–		1/A-10	2/A-10	9/A-10			–	13		
	221	215	3'-0" x 7'-8"	1¾	C	PLAM	SC	–	STL	1/A-10	2/A-10	2/A-10			–	12		12" φ PLAS. LAM. ○ @ 5'-0" HT.
	222	222	3'-0" x 7'-10"		C			–		15/A-10	9/A-10	23/A-10			–	8		
	223	223			C			–				9/A-10			–	8		
	224	224	16'-0" x 8'-0"	9/16"	–	VINYL	HC	–	–	14/A-13	27/A-8				–	4		FOLDING DOOR
	225	224	24'-0" x 8'-0"	9/16"	–	VINYL	HC	–	–	14/A-13	27/A-8				–	4		FOLDING DOOR
	226	224	10" x 8'-0"	1⅜"	C	P. LAM.	SC	–	WD	–	27/A-8	27/A-8			–	16		POCKET DOOR
	227	224	10" x 8'-0"	1⅜"	C	P. LAM.	SC	–	WD	–	27/A-8	27/A-8			–	16		POCKET DOOR
	228	226	3'-6" x 7'-0"	–	–	S.STL		–	S.STL	9/	9/	9/A13	10/A13		–	–		ELEVATOR DOOR
	301	301	3'-0" x 7'-2"	1¾	C	STL	HC	–	STL	21/A-14	21/A-14	21/A-14	19/A-14		–	2		ROOF PENTHOUSE

REVISIONS		
NO.	DATE	DESCRIPTION

REGISTERED ARCHITECT DONALD GIBBS No. C-3447 STATE OF CALIFORNIA

HUGH GIBBS & DONALD GIBBS
Architects A.I.A.
3575 Long Beach Boulevard, Long Beach, California

DRAWN PR/KJA	DATE 12-16-83
CHECKED	JOB 1791

TORRANCE TRANSIT FACILITY

TORRANCE CALIFORNIA

FEDERAL PROJECT NO. CA-03-0208-01

DOOR SCHEDULE

SHEET A.9

11/78 DIETERICH-POST CLEARPRINT 1020

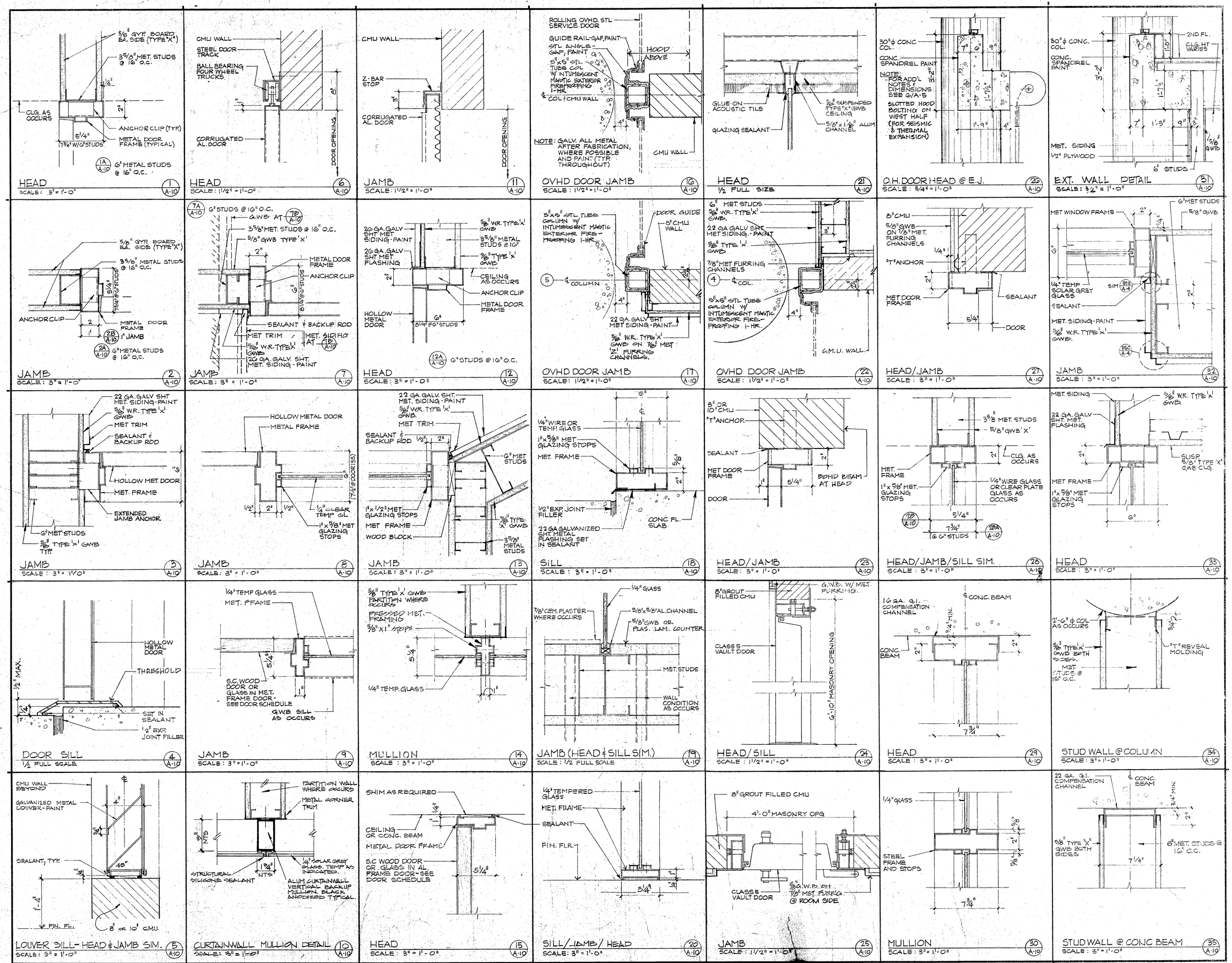

REVISIONS		
NO	DATE	DESCRIPTION

REGISTERED ARCHITECT DONALD GIBBS

HUGH GIBBS & DONALD GIBBS
Architects F.A.I.A.
3575 Long Beach Boulevard, Long Beach, California

DRAWN PR/KJA	DATE 12-16-83
CHECKED	JOB 1791

TORRANCE TRANSIT FACILITY

TORRANCE
CALIFORNIA

FEDERAL PROJECT NO. CA-03-0208-01

DETAILS

SHEET A.10

DIETERICH-POST CLEARPRINT 1020

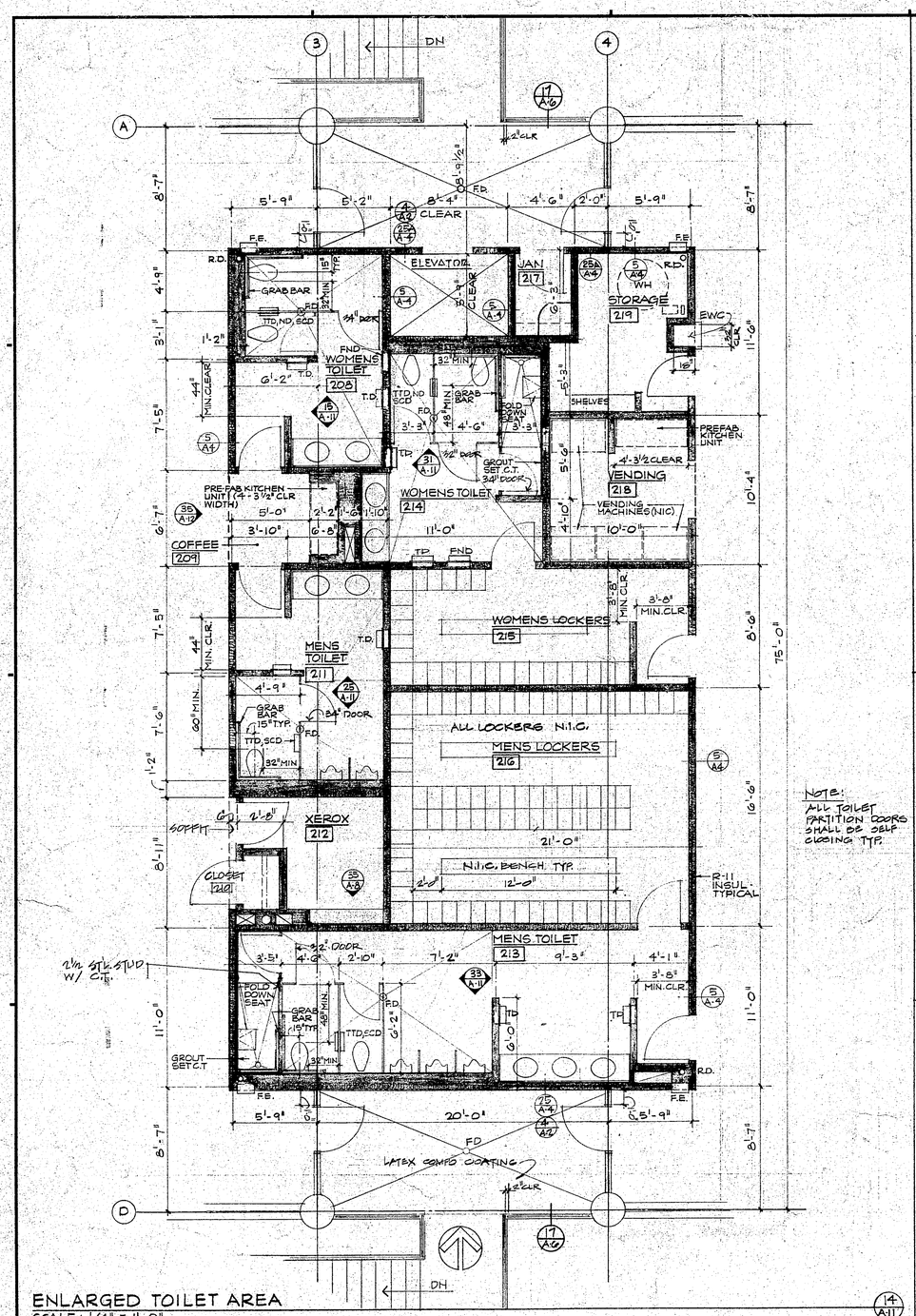

NOTE:
ALL TOILET PARTITION DOORS SHALL BE DROP CLOSING TYP.

ENLARGED TOILET AREA
SCALE: 1/4" = 1'-0"
14 / A-11

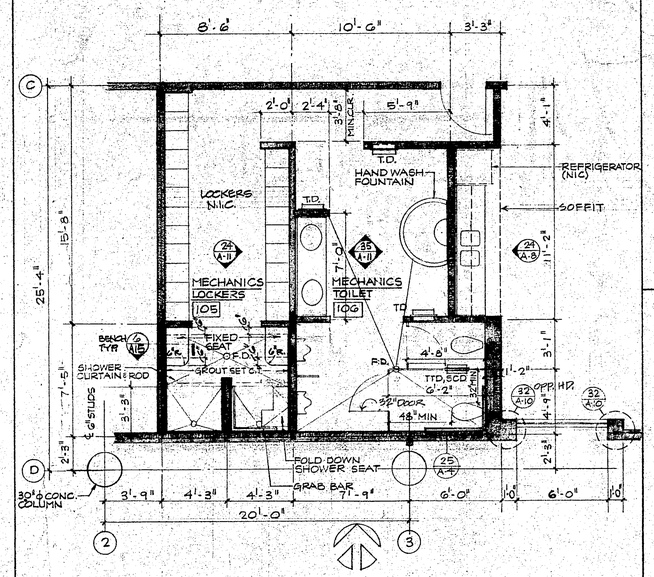

ENLARGED MECHANICS TOILET/LOCKERS
SCALE: 1/4" = 1'-0"
22 / A-11

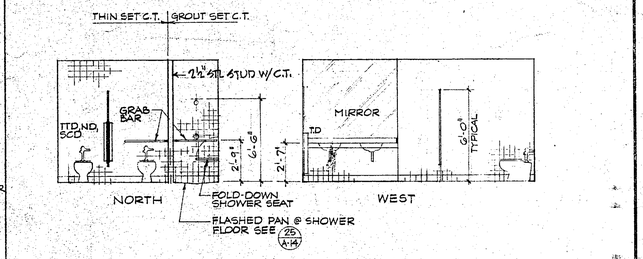

WOMENS TOILET 214
SCALE: 1/4" = 1'-0"
31 / A-11

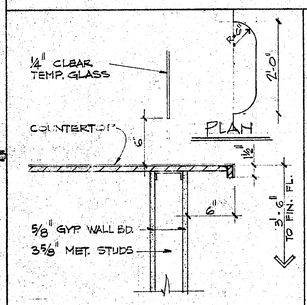

COUNTERTOP DETAIL
SCALE: 1 1/2" = 1'-0"
27 / A-11

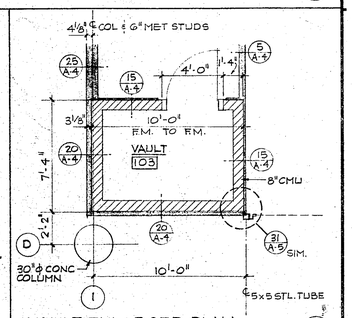

VAULT ENLARGED PLAN
SCALE: 1/4" = 1'-0"
32 / A-11

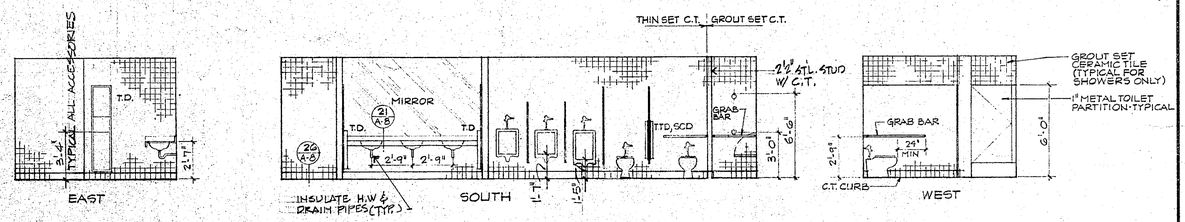

MENS TOILET 213
SCALE: 1/4" = 1'-0"
33 / A-11

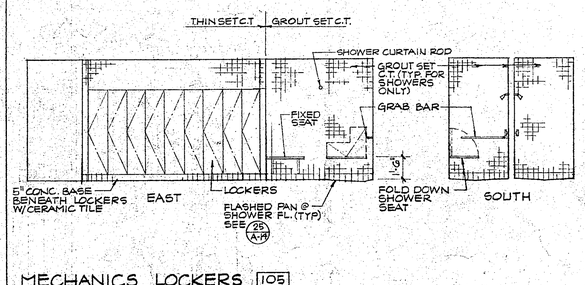

MECHANICS LOCKERS 105
SCALE: 1/4" = 1'-0"
24 / A-11

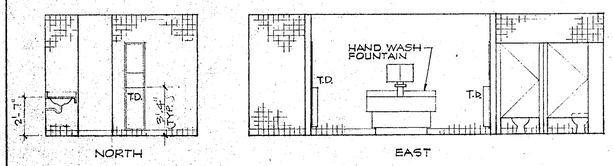

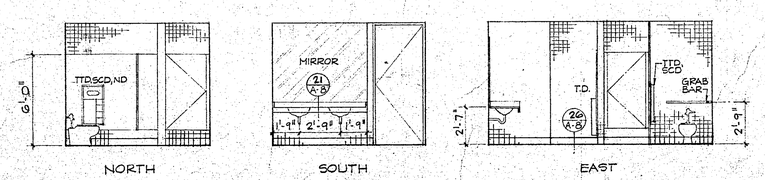

WOMENS TOILET 208
SCALE: 1/4" = 1'-0"
15 / A-11

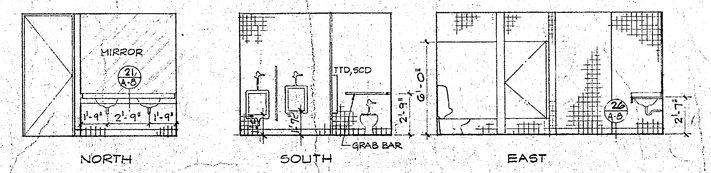

MENS TOILET 211
SCALE: 1/4" = 1'-0"
25 / A-11

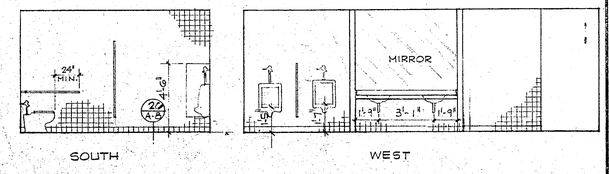

MECHANICS TOILETS 106
SCALE: 1/4" = 1'-0"
35 / A-11

REVISIONS		
NO.	DATE	DESCRIPTION

HUGH GIBBS & DONALD GIBBS
Architects F.A.I.A.
3375 Long Beach Boulevard, Long Beach, California

DRAWN PR/KJA	DATE 12-16-83
CHECKED	JOB 1791

TORRANCE TRANSIT FACILITY

TORRANCE
CALIFORNIA

FEDERAL PROJECT NO. CA-03-0208-01

ENLARGED PLANS, INTERIOR ELEVATIONS

SHEET A-11

DIETERICH-POST CLEARPRINT 3020

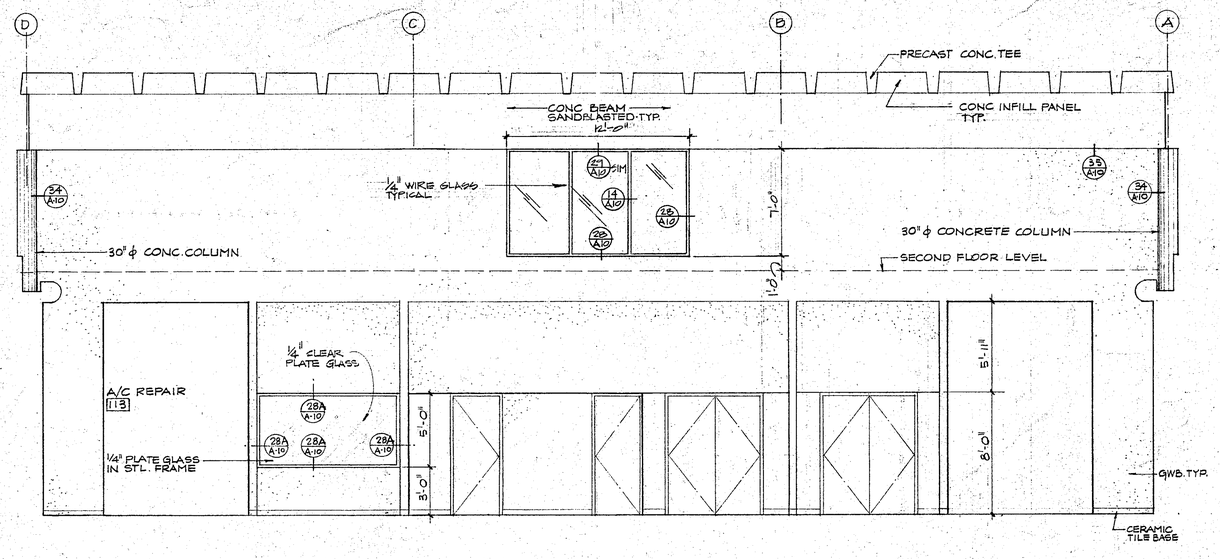

QUICK SERVICE 113
SCALE: 1/4" = 1'-0"
17 A-12

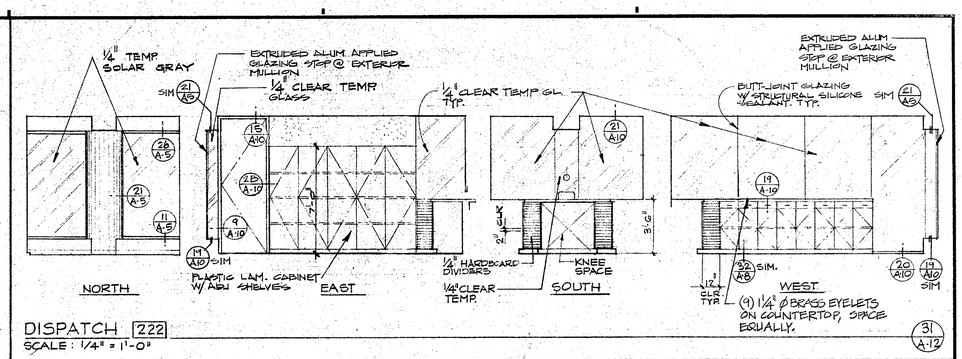

DISPATCH 222
SCALE: 1/4" = 1'-0"
31 A-12

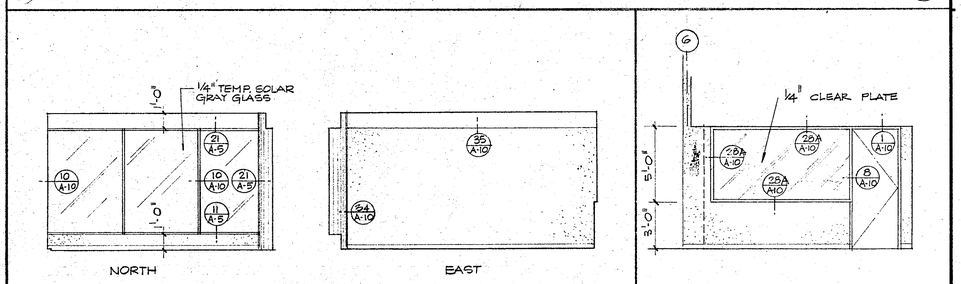

FOYER 129
SCALE: 1/4" = 1'-0"
32 A-12

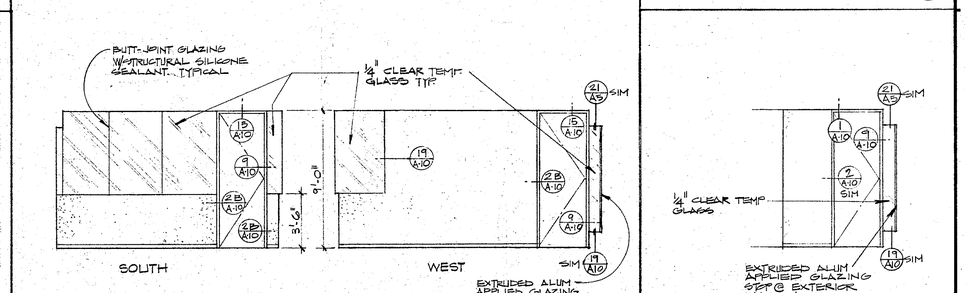

TRANSIT OPERATORS 223
SCALE: 1/4" = 1'-0"
28 A-12

CLASSROOM 224
SCALE: 1/4" = 1'-0"
33 A-12

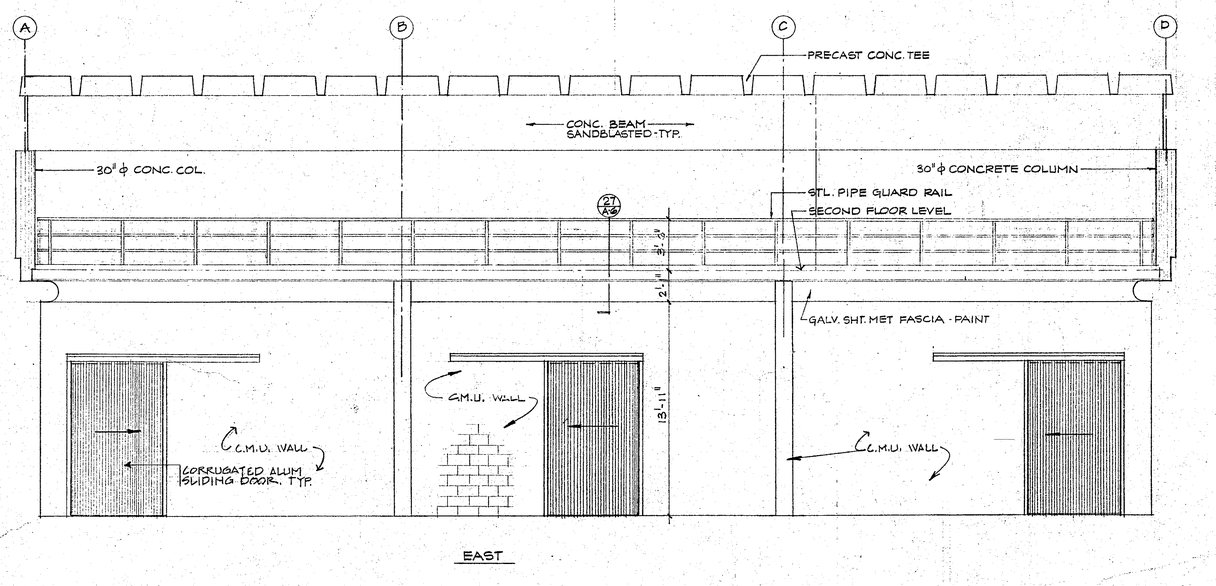

SERVICE BAYS 117
SCALE: 1/4" = 1'-0"
19 A-12

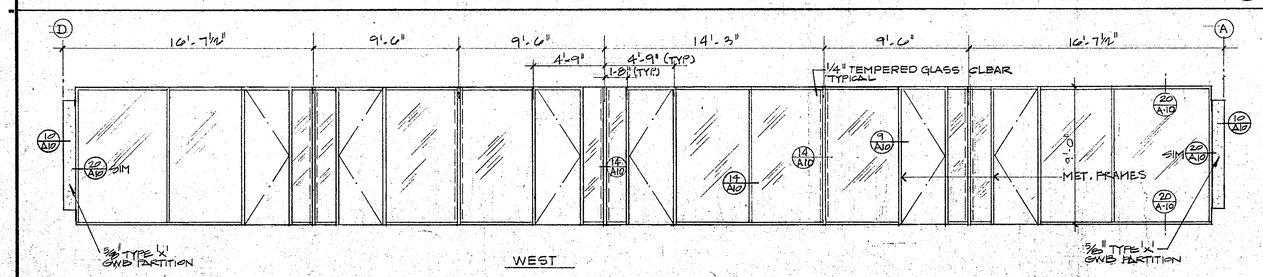

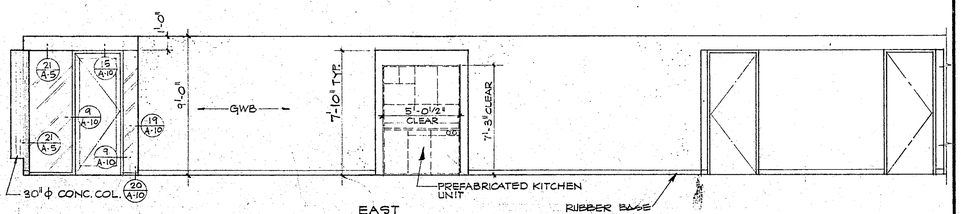

ADMINISTRATION 207
SCALE: 1/4" = 1'-0"
35 A-12

REVISIONS		
NO.	DATE	DESCRIPTION

REGISTERED ARCHITECT DONALD GIBBS No. STATE OF CALIFORNIA

HUGH GIBBS & DONALD GIBBS
Architects F.A.I.A.
3575 Long Beach Boulevard, Long Beach, California

DRAWN PR/KJA	DATE 12-16-83
CHECKED	JOB 1791

TORRANCE TRANSIT FACILITY

TORRANCE
CALIFORNIA

FEDERAL PROJECT NO CA-03-0208-01

INTERIOR ELEVATIONS

SHEET A.12

DIETERICH-POST CLEARPRINT 1020

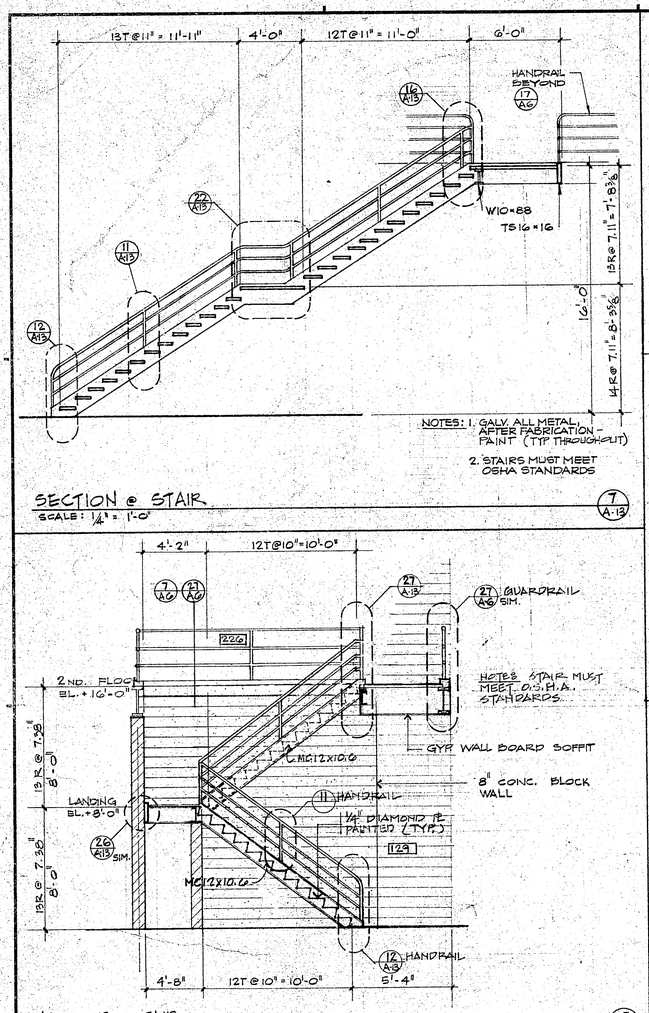

SECTION @ STAIR (7, A-13)
SCALE: 1/4" = 1'-0"

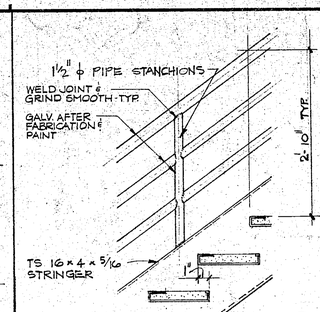

HANDRAIL (11, A-13)
SCALE: 1" = 1'-0"

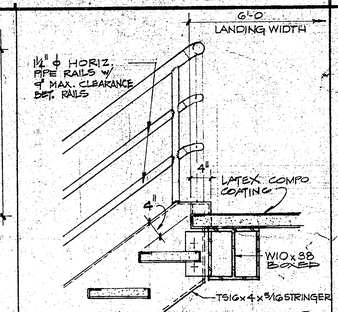

SECOND FLOOR LANDING (16, A-13)
SCALE: 1" = 1'-0"

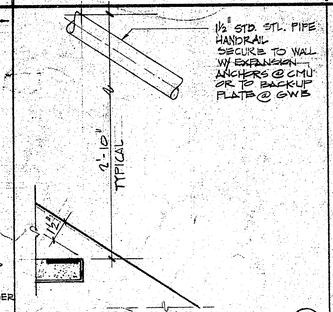

HANDRAIL @ WALL (INT. STAIR) (21, A-13)
SCALE: 3" = 1'-0"

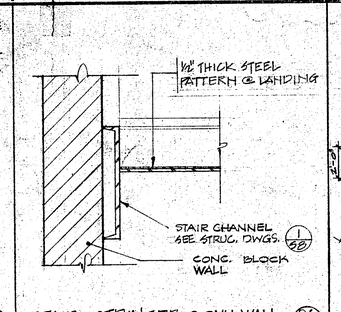

STAIR STRINGER @ CMU. WALL (26, A-13)
SCALE: 1 1/2" = 1'-0"

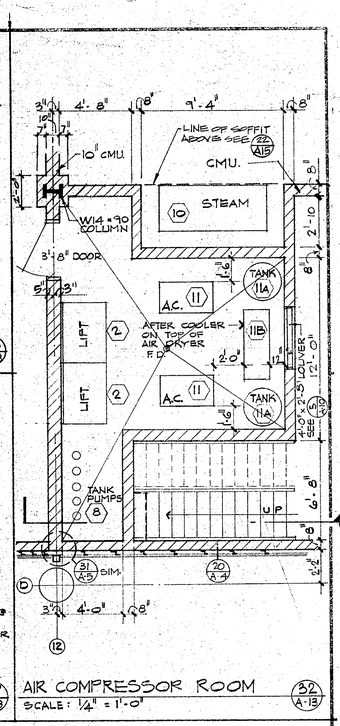

AIR COMPRESSOR ROOM (32, A-13)
SCALE: 1/4" = 1'-0"

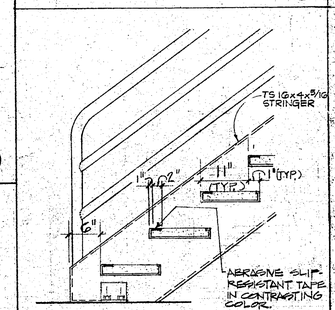

1st FLOOR LANDING (12, A-13)
SCALE: 1" = 1'-0"

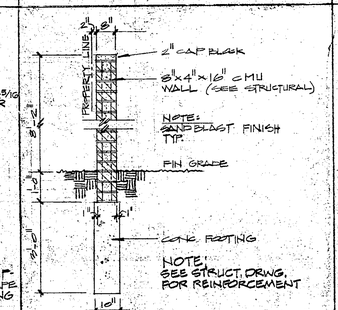

CONC BLOCK WALL (17, A-13)
SCALE: 3/4" = 1'-0"

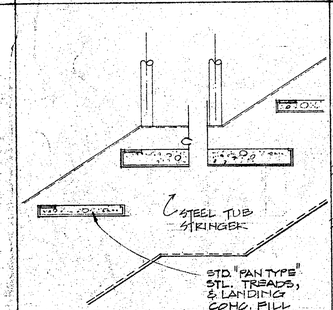

MIDDLE LANDING (22, A-13)
SCALE: 1 1/2" = 1'-0"

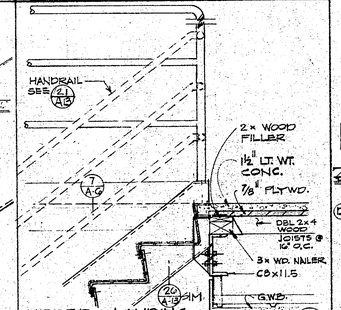

UPPER LANDING (27, A-13)
SCALE: 1" = 1'-0"

INTERIOR STAIR (8, A-13)
SCALE: 1/4" = 1'-0"

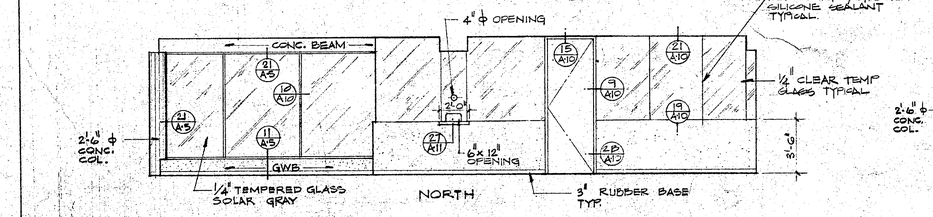

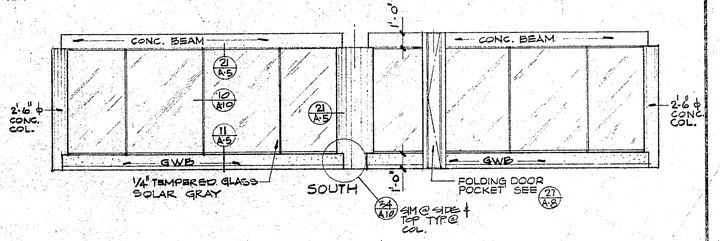

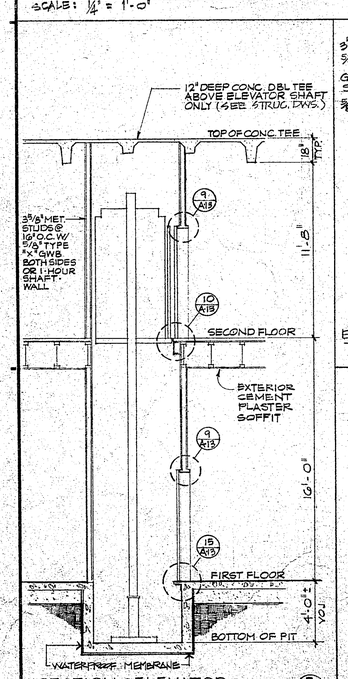

SECTION @ ELEVATOR (5, A-13)
SCALE: 1/4" = 1'-0"

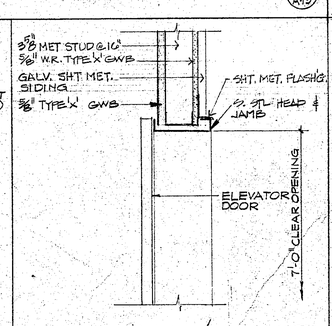

ELEVATOR DOOR HEAD/JAMB SIM (9, A-13)
SCALE: 1 1/2" = 1'-0"

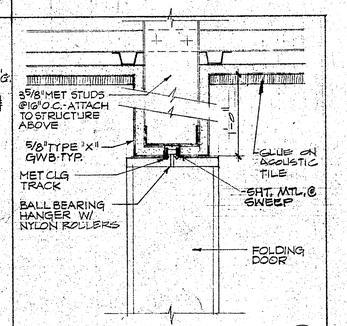

FOLDING DOOR HEAD (14, A-13)
SCALE: 3" = 1'-0"

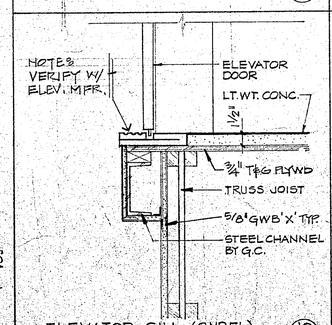

ELEVATOR SILL (2ND FL) (10, A-13)
SCALE: 1 1/2" = 1'-0"

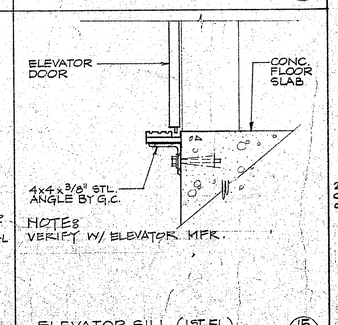

ELEVATOR SILL (1ST FL) (15, A-13)
SCALE: 1 1/2" = 1'-0"

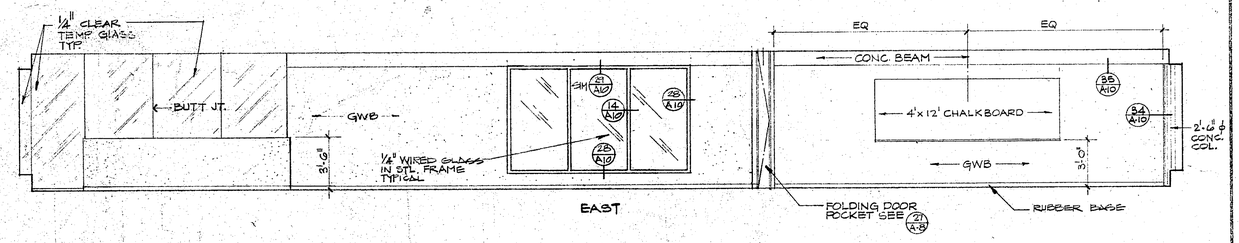

EAST

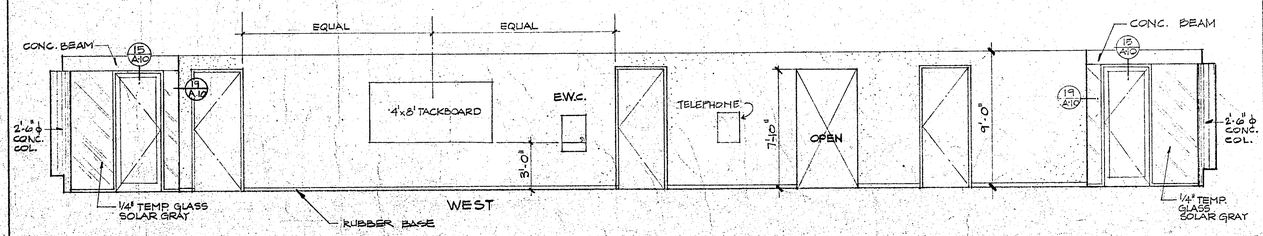

WEST

DRIVERS LOUNGE 221 (35, A-13)
SCALE: 1/4" = 1'-0"

REVISIONS		
NO	DATE	DESCRIPTION

REGISTERED ARCHITECT DONALD GIBBS No. C 3410 STATE OF CALIFORNIA

HUGH GIBBS & DONALD GIBBS
Architects F.A.I.A.
3578 Long Beach Boulevard, Long Beach, California

DRAWN PR	DATE 12-16-83
CHECKED	JOB 1791

TORRANCE TRANSIT FACILITY

TORRANCE
CALIFORNIA

FEDERAL PROJECT NO. CA-03-0208-01

STAIR DETAILS & ELEVATOR DETAILS

SHEET A-13

DIETERICH-POST CLEARPRINT 1220

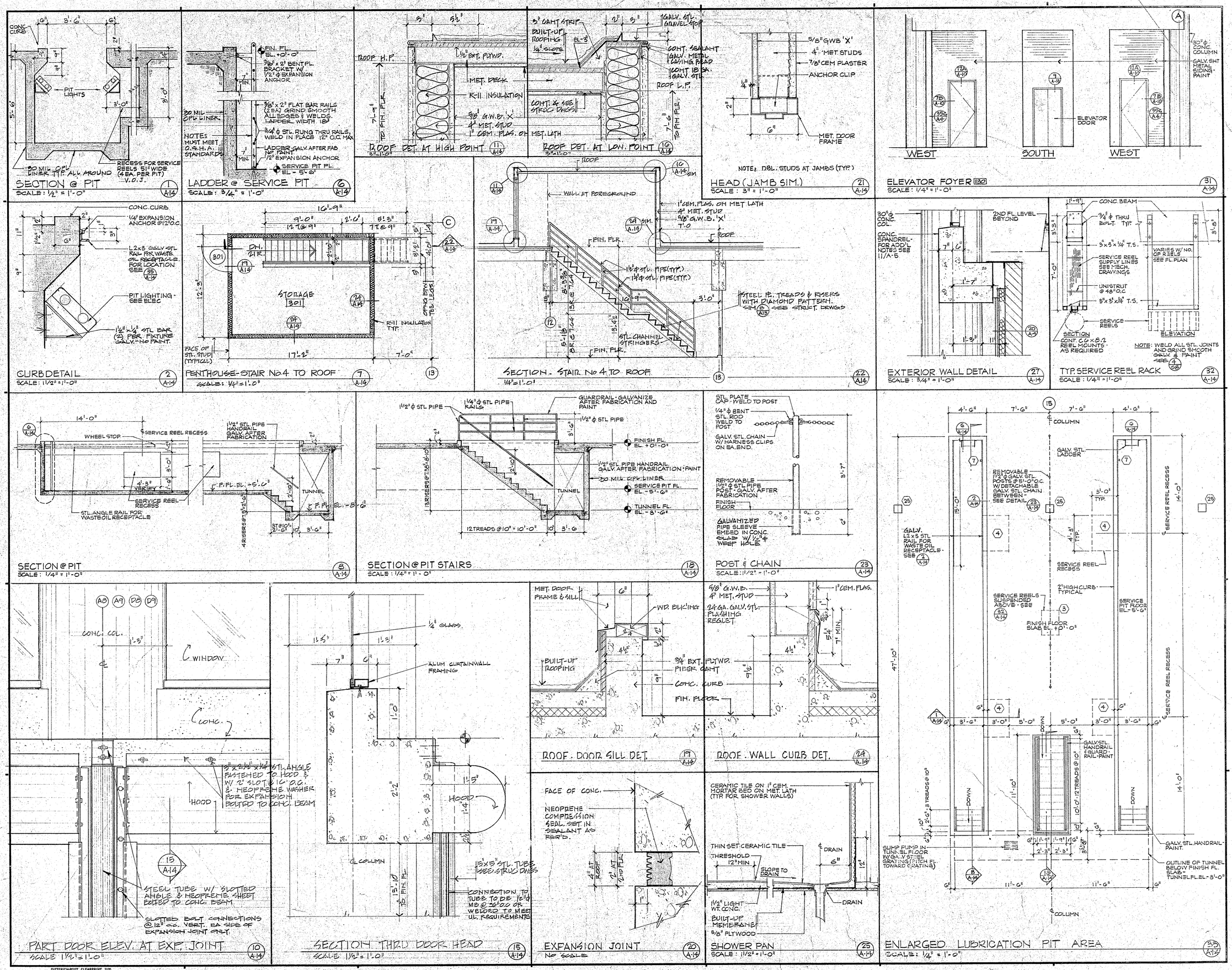

HUGH GIBBS & DONALD GIBBS
Architects F.A.I.A.
3575 Long Beach Boulevard, Long Beach, California

DRAWN PR	DATE 12-16-83
CHECKED	JOB 1791

TORRANCE TRANSIT FACILITY

TORRANCE CALIFORNIA

FEDERAL PROJECT NO. CA-03-0208-01

MISC. DETAILS

SHEET A14

DIETERICH-POST CLEARPRINT 1020

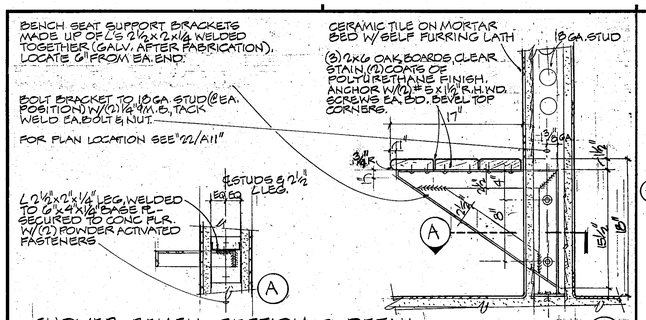

SHOWER BENCH - SECTION & DETAIL 6 A13

SCALE - 1½" = 1'-0"

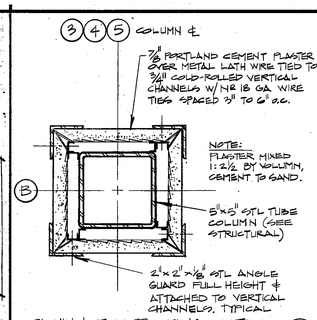

COLUMN FIREPROOFING DETAIL 11 A15

SCALE: 3" = 1'-0"

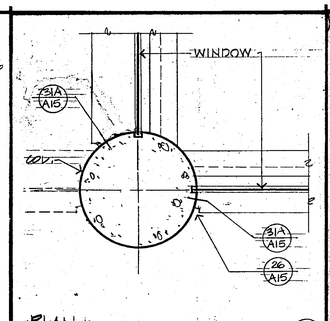

PLAN 16 A15

3/4" = 1'-0"

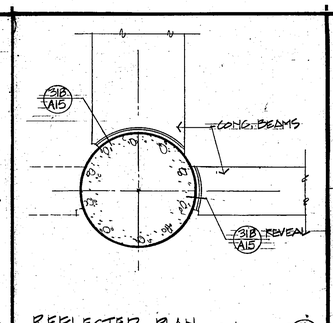

REFLECTED PLAN 21 A15

3/4" = 1'-0"

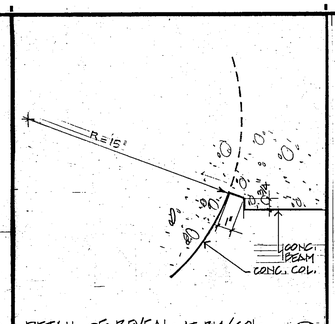

DETAIL OF REVEAL AT BM/COL. 26 A15

3" = 1'-0"

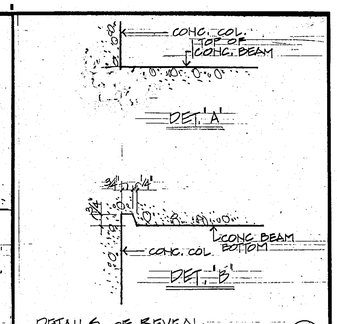

DETAILS OF REVEAL 31 A15

3" = 1'-0"

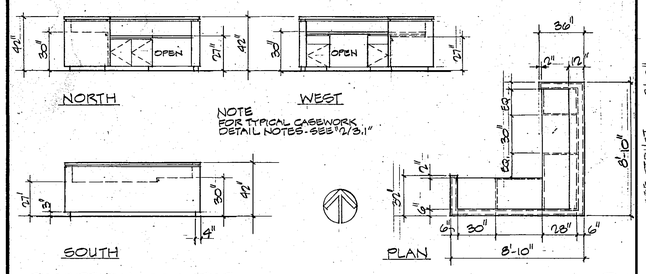

RECEPTION COUNTER 7 A13

SCALE 1/4" = 1'-0"

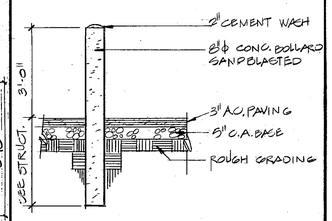

CONCRETE BOLLARD 12 A15

SCALE 1/2" = 1"

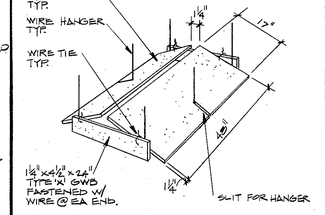

LIGHT FIXTURE PROTECTION 17 A15

NO SCALE

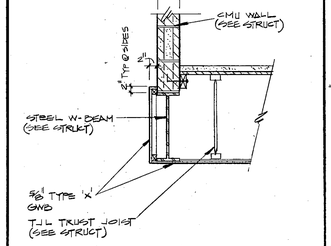

SOFFIT DETAIL 22 A15

SCALE: 3/4" = 1'-0"

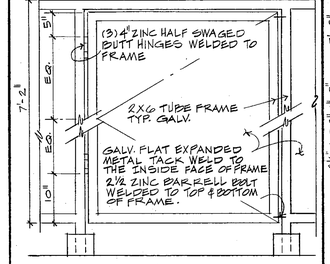

ROOF SCREEN GATE 27 A15

1" = 1'-0"

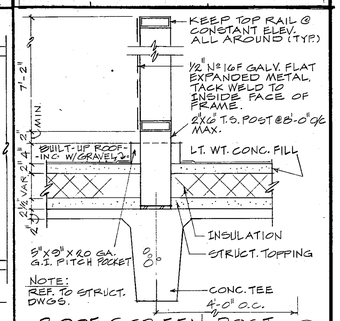

ROOF SCREEN POST 32 A15

1" = 1'-0"

HUGH GIBBS &
DONALD GIBBS
Architects F.A.I.A.
3575 Long Beach Boulevard, Long Beach, California

DRAWN	DATE
CHECKED	JOB 1791

TORRANCE TRANSIT FACILITY

TORRANCE
CALIFORNIA

DETAILS

SHEET **A15**

TYPICAL SITE DETAILS

GENERAL NOTES

1. ALL DEBRIS AND FOREIGN MATERIAL SHALL BE REMOVED FROM THE SITE PRIOR TO PLACING OF ANY FILL MATERIAL.
2. NO FILL SHALL BE PLACED UNTIL SUBGRADE APPROVAL IS OBTAINED FROM THE CITY GRADING INSPECTOR AND THE SOILS ENGINEER.
3. ALL FILL SHALL BE PLACED UNDER THE DIRECT INSPECTION OF THE SOILS ENGINEER.
4. ALL IMPORT FILL SHALL BE APPROVED BY THE SOILS ENGINEER PRIOR TO DELIVERY TO THE JOB.
5. IF SEEPAGE PIT OR CESSPOOL IS ENCOUNTERED, DO NOT FILL UNTIL APPROVAL IS OBTAINED FROM THE CITY GRADING INSPECTOR AND THE SOILS ENGINEER.
6. ALL FILL SHALL BE COMPACTED TO A DENSITY OF NOT LESS THAN 90% OF MAXIMUM DENSITY IN ACCORDANCE WITH AMERICAN SOCIETY FOR TESTING MATERIALS(ASTM) TEST METHOD D 1557-70.
7. THE FILL SHALL BE PLACED AT A MOISTURE CONTENT OF OPTIMUM MOISTURE OR ABOVE (ONLY IN EXPANSIVE SOILS).
8. THE SELECTED FILL MATERIAL SHALL BE PLACED IN LEVEL, UNIFORM LAYERS NOT EXCEEDING 6" IN THICKNESS WHEN COMPLETED. EACH LAYER SHALL BE THOROUGHLY MIXED DURING THE SPREADING TO INSURE UNIFORMITY OF MATERIAL AND MOISTURE IN EACH LAYER.
9. ALL WORK SHALL COMPLY TO CITY GRADING REGULATIONS.
10. THE STAMPED SET OF PLANS SHALL BE ON THE JOB SITE AT ALL TIMES.
11. CUT SLOPES SHALL BE 2:1 MAXIMUM.
12. FILL SLOPES SHALL BE 2:1 MAXIMUM AND COMPACTED TO 90% OF MAXIMUM DENSITY.
13. PROTECTIVE MEASURES SHALL BE TAKEN BY THE CONTRACTOR AND THE OWNER TO PROTECT ADJACENT PROPERTY AND PUBLIC WAYS DURING GRADING OPERATIONS.
14. DUST SHALL BE CONTROLLED BY WATERING AT ALL TIMES DURING GRADING.
15. RETAINING WALL PERMITS, IF REQUIRED, TO BE OBTAINED BY OTHERS.
16. DEMOLITION PERMITS, IF REQUIRED, TO BE OBTAINED BY OTHERS.
17. FOR ADDITIONAL GRADING SPECIFICATIONS, SEE SOILS REPORT
    DATE: JAN. 18, 1983
    PREPARED BY WESTERN LABORATORY
18. NO CONCRETE, TRASH, ROCKS, OR DEBRIS TO BE PLACED IN FILLS.
19. ALL ABANDONED PIPE, SUMPS, VAULTS OR OTHER STRUCTURES TO BE REMOVED AND REPLACED WITH APPROVED COMPACTED FILL.
20. OBTAIN APPROVAL FROM RESPONSIBLE AGENCY PRIOR TO GRADING IN STREET R/W OR EASEMENTS.
21. CITY OF LOS ANGELES FORM B-164 (GENERAL SPECIFICATIONS IS HEREBY MADE PART OF THESE PLANS).
22. A BERM PER DETAIL SHALL BE PLACED AT TOP OF ALL FILL SLOPES.
23. ALL ELEVATIONS SHOWN ON THE PLANS ARE FINISHED SURFACE. ALLOW FOR A.C. OR CONC. THICKNESS, BASE AND SUB-BASE PER SOIL ENGINEER'S RECOMMENDATIONS.
24. CONCRETE BACKFILL TO BE USED ON ALL PIPE WITH LESS THAN 3 FEET OF COVER PER L.A.C.F.C. STANDARD DWG. 2-D177.

LEGEND

(100)	EXISTING GRADE CONTOUR
(103.42)	EXISTING SPOT ELEVATION
116	PROPOSED GRADE CONTOUR
109.5	PROPOSED SPOT ELEVATION
	BLOCK WALL
	DAYLIGHT
	DIRECTION OF FLOW & SLOPE
	MANHOLE
	CATCH BASIN
	AREA DRAIN
	JUNCTION STRUCTURE
	ROOF DRAIN
TAD	TOP OF AREA DRAIN
TCB	TOP OF CATCH BASIN
TMH	TOP OF MANHOLE
FL : FL	FLOW LINE
HP: HP	HIGH POINT
INV.	INVERT
TC	TOP OF CURB
TW	TOP OF WALL
F.F.	FINISHED FLOOR
F.S.	FINISHED SURFACE

CONSTRUCTION NOTES

1. ~~Saw cut existing curbs and gutter and join with new curbs and gutter.~~
2. ~~Construct curbs and gutter per Drawing No. S-4.~~
3. ~~Relocate existing street light and signalization.~~
4. ~~Construct cross gutter per Drawing No. S-6.~~
5. ~~Relocate existing signalization.~~
6. ~~Construct wheelchair ramp and bicycle ramp per S-24.~~
7. ~~Saw cut and join existing sidewalk and bike path.~~
8. Construct 6" PCC curbs per detail hereon.
9. ~~Remove existing manhole.~~
10. ~~Remove existing C.M.P.~~
11. Abandon existing pipe in place by filling with sand and sealing ends.
12. Construct M.H. No. 1 per L.A. CO. F.C.D., Drawing No.-2 D102.
13. ~~Construct driveway per Drawing No. S-11.~~
14. Construct catch basin No. 5 per L.A. CO. F.C.D., Drawing No.-2 D164.
15. Adjust existing water well to el. 110.0.
16. Relocate existing power poles.
17. Construct 6" AC berm per detail hereon.
18. ~~Remove existing catch basin.~~
19. Construct redwood header per detail hereon.
20. Construct berm per detail hereon.
21. Provide splash block for roof drain per architectural details.
22. Construct junction structure No. 2 per L.A. CO. F.C.D., Drawing No.-2 D112.
23. ~~Armco flume, invert and size per plan.~~
24. ~~Flume down drain, 11" ϕ weld to longitudinal flume at 45°.~~

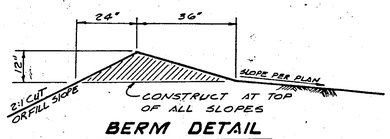

BERM DETAIL

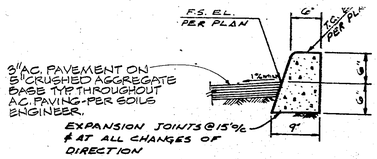

CONCRETE CURB

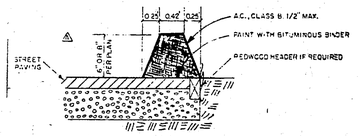

AC-BERM DETAIL

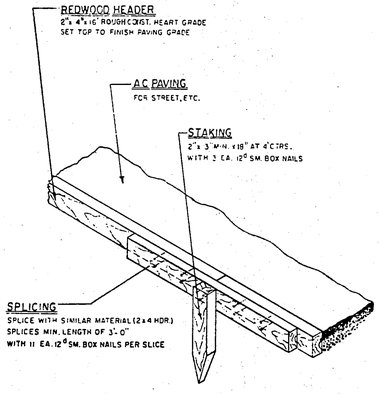

REDWOOD HEADER DETAIL

Prepared By:
PACE ENGINEERING
5435 BALBOA BLVD.
ENCINO, CA. 91316
(213) 986-2881, 872-1021

By	Revisions	Date
BJ	CITY REVISION	3/22/84

HUGH GIBBS & DONALD GIBBS
Architects F.A.I.A.
3575 Long Beach Boulevard, Long Beach, California

DRAWN I.H.	DATE 12-16-83
CHECKED I.H.-BL	JOB 1791

TORRANCE TRANSIT FACILITY

TORRANCE CALIFORNIA

FEDERAL PROJECT NO. CA-03-0208-01

TYPICAL SITE DETAILS

SHEET C-1

FINISH GRADING PLAN

MADRONA AVENUE

PROJECT LIMIT

TORRANCE TRANSIT FACILITY F.F.-110.00

CITY SERVICE FACILITY F.F.-110.00

STORAGE BLDG. F.F.-110.00

STORAGE BLDG. F.F.-110.00

NAP SEE SHEET C-4

NAP SEE SHEET C-4

NAP SEE SHEET C-4

NOTE: 1) SEE SHEET C-1 & C-2 FOR WORK COMPLETED PRIOR TO THIS PHASE.

2) TRANSIT GENERAL CONTRACTOR WILL VERIFY ROUGH GRADED BEFORE ACCEPTING THE SITE. THEREAFTER, ANY ROUGH GRADING NECESSARY DUE TO CONSTRUCTION RAIN ETC. IS THE RESPONSIBILITY OF THE TRANSIT GENERAL CONTRACTOR.

NOTE: ALL ROUGH GRADING & STORM DRAIN WORK NOT A PART OF THIS CONTRACT. CONCRETE SLABS & FINISH GRADING SHALL BE CONSTRUCTED PER SPECIFICATIONS TO FINISH SLAB ELEVATIONS.

(83.42) OUTLET INVERT 18" RCP
JOIN BACK OF EXIST CB WITH 18" RCP. MATCH BACK OF CB ELEV.
INSTALL 30 LF - 18" RCP
CONST. INLET NO. 1, CASE 2, PER LACFCD PLAN 2-D265

CONST. INLET NO. 1 CASE 2 PER LACFC PLAN 2-D265

STOCK PILE AREA (250' x 450') 2.0% MIN. SIDE SLOPE FROM PHASE #1

Prepared By: W.O. 2087
PACE ENGINEERING
5435 BALBOA BLVD.
ENCINO, CA. 91316
(213) 986-2881, 872-1041

By	Revisions	Date
BJ	CITY REVISION	3/22/8

HUGH GIBBS & DONALD GIBBS
Architects F.A.I.A.
3575 Long Beach Boulevard, Long Beach, California

DRAWN I.H./T.T.	DATE 12-16-83
CHECKED I.H. - B.L.	JOB 1791

TORRANCE TRANSIT FACILITY

TORRANCE CALIFORNIA

FEDERAL PROJECT NO. CA-03-0203-01

FINISH GRADING PLAN

SHEET C-2

SYMBOL LIST (AS APPLICABLE)

CEIL | WALL | FLOOR

- LIGHTING FIXTURE, INC. OR HID
- RECESSED LIGHTING FIXTURE, INC OR HID
- SURFACE MOUNTED FLUORESCENT FIXTURE
- RECESSED FLUORESCENT FIXTURE
- FLUORESCENT FIXTURE, SPECIAL SHAPE
- LETTER IN OR AT SYMBOL INDICATES FIXTURE TYPE & WATTAGE
- EXIT LIGHT FACE SHADED WITH DIRECTIONAL ARROW
- ADJUSTABLE FIXTURE, AIMING DIRECTION INDICATED
- SHADED SYMBOL - NIGHT OR EMERGENCY LIGHT
- POLE MOUNTED FIXTURE, TWO LIGHT SHOWN SEE DETAIL
- LIGHTING TRACK, LENGTH AS INDICATED

- SIGN OUTLET, VERIFY LOCATION WITH SIGN SUPPLIER
- JUNCTION BOX SIZE, AS NOTED OR REQUIRED
- SINGLE CONVENIENCE OUTLET - 20A
- DUPLEX CONVENIENCE OUTLET - 20A FLOOR OUTLETS STUB MOUNTED IN CAST BOX
- DOUBLE DUPLEX IN 2 GANG BOX,
- SPECIAL OUTLET, TYPE AS NOTED.
- DUPLEX OUTLET, BOTTOM HALF SWITCHED
- FLOOR BOX - FLUSH
- DUPLEX OUTLET ON FLOOR BOX
- DUPLEX OUTLET IN FLOOR BOX
- SPECIAL OUTLET ON FLOOR BOX
- SPECIAL OUTLET IN FLOOR BOX

VERIFY EXACT LOCATION BEFORE INSTALLATION

- SPEAKER VOLUME CONTROL, +48"
- SPEAKER OUTLET FOR SURFACE SPEAKER
- MICROPHONE OUTLET IN FLOOR BOX
- SPEAKER BACK BOX (SOUNDOLIER #95-B) WITH GRILL (SOUNDOLIER #51-B) FOR PAGING
- T.V. ANTENNA OUTLET
- CLOCK OUTLET

- SURFACE MOUNTED CABINET OR EQUIPMENT
- RECESSED MOUNTED CABINET OR EQUIPMENT
- LIGHTING PANEL 208 VOLT, 4 WIRE
- LIGHTING OR POWER PANEL 480 VOLT, 3 OR 4 WIRE
- SIGNAL TERMINAL CABINET
- TELEPHONE OUTLET, FLOOR UNIT IN FLOOR BOX

- INTERCOM OUTLET, FLOOR UNIT ON FLOOR BOX
- RECESSED TELEPHONE
- FIRE TREATED PLYWOOD BACKBOARD 3/4" X 8' HIGH, LENGTH AS SHOWN
- JUNCTION BOX FOR CCTV CAMERA (ON ROOF PROVIDE ASSY. AS DETAILED)

- MOTOR OUTLET WITH WP FLEX CONNECTION
- RELAY OR CONTACTOR, RATING AS NOTED
- 3 POLE MAGNETIC STARTER, SIZE 1 OR AS NOTED
- 3 POLE HP RATED DISCONNECT SWITCH 30A OR AS NOTED (W.P. OUTDOORS)
- FUSED DISCONNECT SWITCH, RATING AS NOTED
- CIRCUIT BREAKER, RATING AS NOTED
- TOGGLE SWITCH, SUBSCRIPTS AS FOLLOW:

2 - 2 POLE
3 - 3-WAY
4 - 4-WAY
M - MANUAL MOTOR STARTER HP RATED (W/O.L.'S)
K - KEY OPERATED
P - WITH PILOT LIGHT IN 2 GANG BOX (DEEP)
R - DOUBLE THROW, MOMENTARY CONTACT, RELAY CONTROL

- THREE SWS IN GANGED BOX CONTROLLING DESIGNATED FIXTURES
- INC DIMMER WITH INTEGRAL SWITCH
- TIME SWITCH
- EMERGENCY BATTERY LIGHT, SEE FIXTURE SCHEDULE
- PUSH BUTTON STATION +4'-6" (W.P. WHEN OUTDOORS)
- FIRE ALARM BELL - SUPPLIED UNDER MECH. SECTION, INSTALLED BY ELECTRICAL.
- WATER FLOW SWITCH - SUPPLIED UNDER MECH. SECTION, INSTALLED BY ELECTRICAL.
- OS & Y VALVE TAMPER SWITCH

1/2" C - 2 NO. 12	10 1/2" C - 2 NO. 10	8 3/4" C - 2 NO. 8
1/2" C - 3 NO. 12	10 1/2" C - 3 NO. 10	8 3/4" C - 3 NO. 8
1/2" C - 4 NO. 12	10 3/4" C - 4 NO. 10	8 3/4" C - 4 NO. 8
3/4" C - 5 NO. 12	10 3/4" C - 5 NO. 10	8 1" C - 5 NO. 8
3/4" C - 6 NO. 12	10 1" C - 6 NO. 10	8 1" C - 6 NO. 8
3/4" C - 7 NO. 12	10 1" C - 7 NO. 10	8 1¼" C - 7 NO. 8
1" C - 8 NO. 12	10 1" C - 8 NO. 10	8 1¼" C - 8 NO. 8

- A1-3, 5 (3 WIRE CIR 1-3, 2 WIRE CIR 5) HOMERUN TO PANEL "A"
- (TO MCC OR SWBD) SEE SINGLE LINE DIAGRAM

- DOWN — UP CONDUIT RISER
- CONDUIT TERMINATING IN FLUSH COUPLING
- FLEXIBLE CONDUIT CONNECTION
- (CLG OR WALLS) — (IN FLOOR OR GROUND) CONCEALED CONDUIT RUN
- CONDUIT SEAL
- G — GROUND CONDUCTOR IN CONDUIT SEE SPECS — BARE BURIED GROUND CONDUCTOR SEE SPECS
- GROUND CONDUIT & WIRE SIZE AS NOTED /OR REQ'D BY CODE. CONNECT TO C.W. PIPE.
- T — 3/4" C. O. — 1" C. O. — 1¼" C. O. TELEPHONE SYSTEM
- A — 1/2"C — 3/4"C — 1"C PAGING SYSTEM
- CCTV — CLOSED CIRCUIT T.V. CONDUIT (1" MIN. OR AS NOTED)
- EXPOSED CONDUIT RUN

- SA EQUIPMENT DESIGNATION
- 1 SPECIAL REFERENCE NOTE
- EQUIPMENT REFERENCE NOTE

ABBREVIATIONS

A, AMP	AMPERES	KW	KILOWATTS	RM	ROOM
AC	ALTERNATING CURRENT	KWH	KILOWATT HOURS	RMS	ROOT MEAN SQUARE
AL	ALUMINUM	LTG	LIGHTING		
AWG	AMERICAN WIRE GAUGE	LV	LOW VOLTAGE	SEC	SECONDARY
BIL	BASIC IMPULSE LEVEL	MCC	MOTOR CONTROL CENTER	SN	SOLID NEUTRAL
CB	CIRCUIT BREAKER	MCM	1,000 CIRCULAR MILS	SP	SINGLE POLE
C, CDT	CONDUIT	MG	MOTOR GENERATOR	STD	STANDARD
CIR, CKT	CIRCUIT	MH	MOUNTING HEIGHT	SUR	SURFACE
CLG	CEILING	MIN	MINIMUM	SW	SWITCH
CO	CONDUIT ONLY	MOM	MOMENTARY	SWBD	SWITCHBOARD
CT	CURRENT TRANSFORMER	MTD	MOUNTED	T	THROW
CU	COPPER	NC	NORMALLY CLOSED	TP	TWISTED PAIR
CX	COAXIAL CABLE	NIC	NOT IN CONTRACT	TPS	TWISTED PAIR SHIELDED
DWG	DRAWING	NF	NON-FUSED		
FLEX	FLEXIBLE CONDUIT	NL	NIGHT LIGHT	TRAN	TRANSFORMER
FLUOR	FLUORESCENT	NO	NORMALLY OPEN	TYP	TYPICAL
GD	GROUND	NTS	NOT TO SCALE	UF	UNDERFLOOR
HOA	HAND-OFF-AUTOMATIC	P	POLE	UG	UNDERGROUND
HP	HORSEPOWER	PAN	PANEL	V	VOLTS
HV	HIGH VOLTAGE	PB	PULL BOX	VA	VOLT AMPERES
HZ	HERTZ	PEN	PENDANT	UON	UNLESS OTHERWISE NOTED
INC	INCANDESCENT	PF	POWER FACTOR		
JB	JUNCTION BOX	PH Ø	PHASE	W	WATTS
KV	KILOVOLT	PRI	PRIMARY	WP	WEATHERPROOF
KVA	KILOVOLT AMPERES	PT	POTENTIAL TRANSFORMER	WT	WATERTIGHT
KVAR	REACTIVE KVA	PVC	POLYVINYL CHLORIDE	XP	EXPLOSION PROOF
EDF	ELECTRIC DRINKING FOUNTAIN	REQ	REQUIRED		

GENERAL NOTES

A. M.H. INDICATES MOUNTING HEIGHT FROM FINISHED FLOOR TO BOTTOM OF FIXTURE OR DEVICE. + 4'-0" INDICATES M.H. FROM FINISHED FLOOR TO CENTER LINE OF OUTLET.

B. MOUNT WALL OUTLETS AND RECEPTACLES AT + 18" VERTICALLY, UNLESS OTHERWISE NOTED, OR AS REQUIRED TO CLEAR COUNTERTOPS AND SPLASHES. SEE SPECIFICATIONS.

C. MOUNT SWITCHES, THERMOSTATS AND DEVICES REQUIRING OBSERVATION OR OPERATION AT + 4'-0" OR AS NOTED.

D. CONCEAL CONDUIT UNLESS OTHERWISE DIRECTED.

E. MOUNT OUTLETS FLUSH WITH BUILDING SURFACES UNLESS OTHERWISE DIRECTED.

F. MINIMUM LINE VOLTAGE WIRING TO BE #12 AWG THW OR THWN.

G. CONNECT TO MOTOR LEADS WITH BOLTED CONNECTORS TAPED.

H. FROM RECESSED PANELS, STUB FOUR 3/4" CONDUITS EACH UP INTO ACCESSIBLE CEILING SPACE AND CAP ON GRADE LEVELS, AND THREE EACH UP AND DOWN ON SUSPENDED LEVELS.

I. USE HIGH TEMPERATURE WIRE FOR RUNS ON ROOF EXCEPT FOR SHORT EXTENSIONS OF CIRCUITS RUN IN CEILING BELOW.

J. LIGHTING FIXTURE CATALOG NUMBERS ARE FOR GUIDANCE. REFER TO DESCRIPTION ON SCHEDULE AND IN SPECIFICATIONS.

K. PROVIDE RECESSED FIXTURES COMPATIBLE WITH CEILING FINISH INCLUDING ALL NECESSARY FRAMES AND HARDWARE. MAINTAIN THE CEILING FIRE RATINGS.

L. PROVIDE UL LABELLED WET LOCATION FIXTURES ON EXTERIOR AND IN WET LOCATIONS.

M. WHERE FLUORESCENT LIGHT FIXTURES ARE SWITCHED BY TWO SWITCHES, CONNECT OUTER LAMPS TO ONE BALLAST AND INNER LAMP(S) TO SECOND BALLAST. GROUP OUTER AND INNER LAMPS ON SAME SWITCH RESPECTIVELY.

N. LOCATE CEILING LIGHTING FIXTURES FROM REFLECTED CEILING PLANS AND SITE LIGHTING FROM CIVIL AND / OR ARCH. PLANS

O. PROVIDE CPE BOOT WITH A SEAL OFF FOR EACH CONDUIT WHICH PENETRATES THE CPE LINER - SEE CPE BOOT DETAIL ON THIS SHEET. REFER TO GAS REMOVAL SYSTEM DWGS. FOR LOCATION OF CPE LINER.

LIGHTING FIXTURE SCHEDULE

TYPE	VOLTS	LAMPS	BALLAST	MOUNTING	DESCRIPTION	MANUFACTURER	USE	REMARKS
AA	277	400W HPS		SURFACE	LOW BAY FIXTURE WITH PRISMATIC GLASS REFLECTOR, SPUN ON ALUMINUM SHADE.	HOLOPHANE SINGLE PRISM-PACK II SERIES	SERVICE BAYS	
AA1	277	400W HPS		WALL	SIMILAR TO 'AA' EXCEPT WALL MOUNTED WITH BRACKET AND ACCESSORIES	HOLOPHANE SINGLE PRISM-PACK II SERIES	SERVICE BAYS	
BB	277	(3) F40 RS		RECESSED	2' X 4' FLUORESCENT FIXTURE WITH HINGED AND LATCH DOOR AND PRISMATIC ACRYLIC LENS	PRUDENTIAL P8300 SERIES		INSIDE AND OUTSIDE LAMPS TO BE SWITCHED SEPARATELY
BB1	277	(2) F40 RS		RECESSED	SAME AS 'BB' EXCEPT TWO LAMP			
CC	277	(2) F40 RS		RECESSED	1' X 4' FLUORESCENT FIXTURE WITH HINGED, LATCH AND DOOR AND PRISMATIC ACRYLIC LENS	PRUDENTIAL P8300 SERIES		
DD	277	(2) F40 RS		PENDANT	TWO LAMP, 4' FLUORESCENT INDUSTRIAL FIXTURE WITH TURRET SOCKETS AND NO UPWARD COMPONENT	COLUMBIA FI-240-M17		
EE	277	F40 RS		SURFACE	ONE LAMP, 4' FLUORESCENT FIXTURE WITH SMOOTH TRANSLUCENT WHITE ACRYLIC DIFFUSER	PRUDENTIAL P1220 SERIES		
EE1	277	(2) F40 RS		SURFACE	SAME AS 'EE' EXCEPT TWO LAMP			
FF	277	150W HPS		RECESSED	LOW BAY FIXTURE WITH PRISMATIC GLASS REFLECTOR AND SPUN ON ALUMINUM COVER AND GLASS BOTTOM ENCLOSURE	HOLOPHANE PAL SERIES	SERVICE BAYS	
GG	277	150W HPS		SURFACE	ENCLOSED AND GASKETED HPS FIXTURE, CAST ALUMINUM HOUSING, REFRACTOR AND CYLINDER	HOLOPHANE PETROLUX SERIES	EXTERIOR CANOPY	
HH	277	175W HPS		SURFACE	EXPLOSION PROOF FIXTURE APPROVED FOR CLASS I, DIVISION I AREAS	APPLETON ACH SERIES	BATTERY ROOM	
KK	277	1000W		POLE	POLE TOP FLOODLIGHT WITH FINISH AS SPECIFIED BY ARCHITECT. PROVIDE BASE, POLE, AND MOUNTING BRACKETS AS REQUIRED BY STRUCTURAL ENGINEER'S DRAWINGS	INFRANOR SERIES 575	SITE LIGHTING	SEE PLANS AND DETAIL SHEET "E-1" FOR CONFIGURATION AND ADDITIONAL DETAILS
XX	277	(2) T-6H		WALL	EXIT SIGN WITH INTERGRAL DOWN LIGHT	MOLDCAST 400 SERIES		
A	120	70W HPS		SURFACE	ENCLOSED AND GASKETED FIXTURE WITH INTEGRAL BALLAST AND GLASS REFRACTOR	HOLOPHANE BANTAM PRISMATIC SERIES	FUEL STATION	
B	120	100W		SURFACE	EXPLOSION PROOF FLUORESCENT FIXTURE DESIGNED FOR CLASS I, DIVISION 2 LOCATIONS, HOUSING AND DOOR ARE CAST IRON ALLOY WITH A HEAT AND IMPACT RESISTANT GLASS LENS, POLISHED ALZAK ALUMINUM NARROW BEAM REFLECTOR	APPLETON SERIES VRS	LUBE PITS	
C	120	100W A23		WALL	INCANDESCENT LIGHT FIXTURE ENCLOSED AND GASKETED WITH GUARD	CROUSE-HINDS VGR SERIES	ELEVATOR PIT	

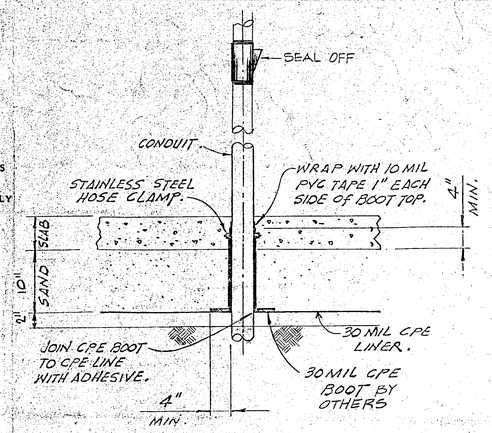

CPE BOOT DETAIL

SCALE: 1" = 1'-0"

NOTE:

CPE BOOT SEAL IS TO BE PROVIDED ONLY WHEN THE CONDUIT PENETRATES THE CPE LINER.

STATEMENT OF DESIGN COMPLIANCE

Divisions One, Eight and Nine of the California Energy Conservation standards for non-residential buildings have been reviewed and the building design described on this page (these pages) is (are) in substantial conformance.

ELECTRICAL ENGINEER	CERTIFICATE NO.	DATE
Samuel Feldkamp	E5768	10-24-83

REGISTERED PROFESSIONAL ENGINEER SAMUEL FELDKAMP E 5768 ELECTRICAL ENGINEERING STATE OF CALIFORNIA

HAYAKAWA ASSOCIATES
CONSULTING ENGINEERS
PHONE (213) 879-4477
1180 SO. BEVERLY DR., LOS ANGELES, CALIF. 90035

HUGH GIBBS & DONALD GIBBS
Architects F.A.I.A.
375 Long Beach Boulevard, Long Beach, California

DRAWN N.K.D.	DATE
CHECKED	JOB 1791

TORRANCE TRANSIT FACILITY

TORRANCE
CALIFORNIA

FEDERAL PROJECT NO. CA-03-0208-01

SYMBOL LIST
GENERAL NOTES
EQUIPMENT SCHEDULE
LIGHTING FIXTURE SCHEDULE

SHEET

DIETERICH-POST CLEARPRINT 1020

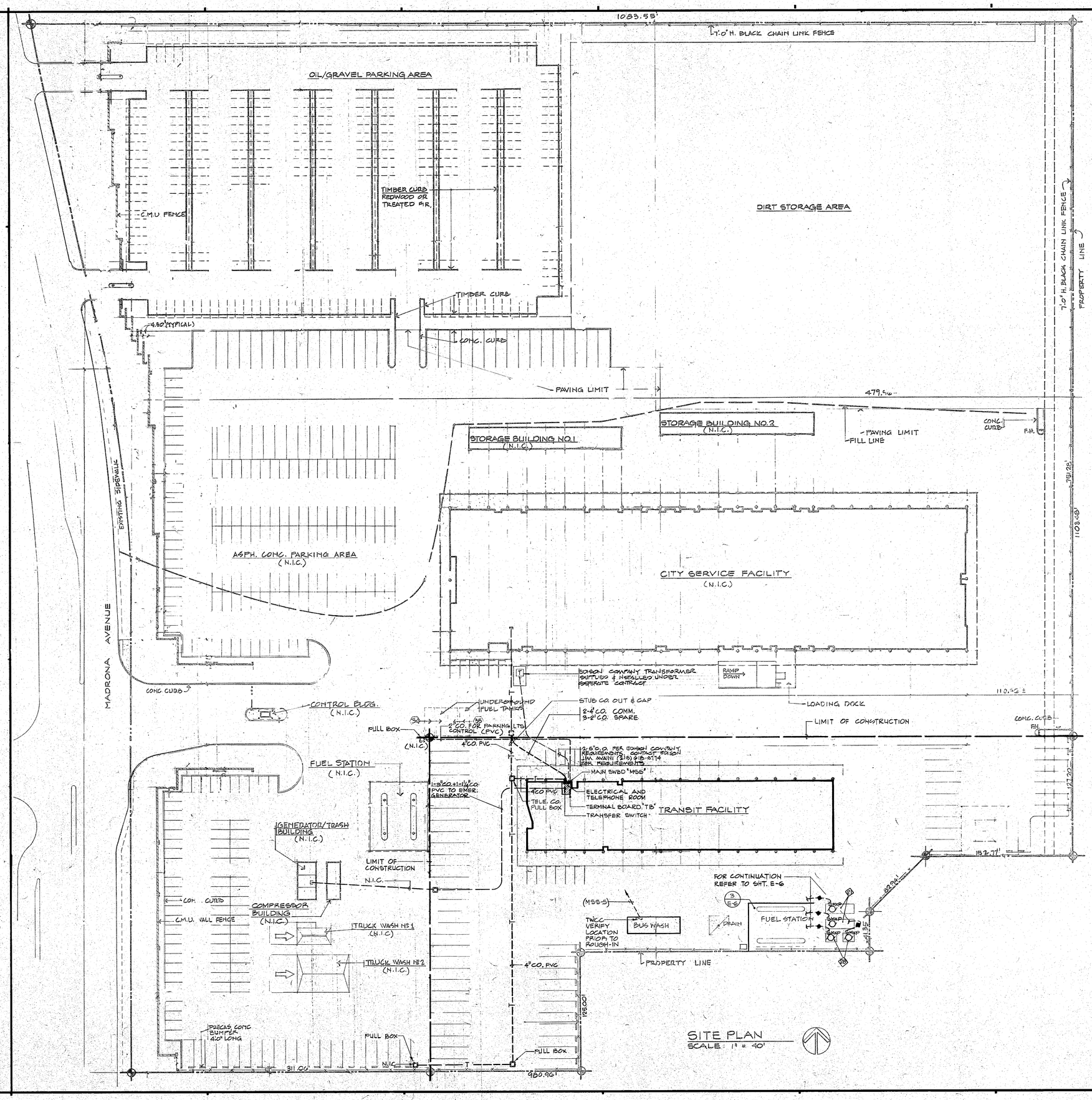

SITE PLAN
SCALE: 1" = 40'

HAYAKAWA ASSOCIATES
CONSULTING ENGINEERS
PHONE (213) 879-4477
1180 SO. BEVERLY DR. LOS ANGELES, CALIF. 90035

HUGH GIBBS & DONALD GIBBS
Architects F.A.I.A.
3575 Long Beach Boulevard, Long Beach, California

DRAWN N.K.D.	DATE
CHECKED	JOB 1791

TORRANCE TRANSIT FACILITY

TORRANCE CALIFORNIA

FEDERAL PROJECT NO. CA-03-0208-01

SITE PLAN

SHEET E-2

NOTES

1. PRIMARY CONDUITS TO BE PROVIDED UNDER PHASE 4 WORK.
2. CONCRETE PAD WITH SLAB BOX FOR SOUTHERN CALIFORNIA EDISON COMPANY TRANSFORMER TO BE PROVIDED UNDER PHASE 4 WORK.
3. 2-4" CONDUITS BETWEEN PAD MOUNT AND PROJECT LIMIT LINE TO BE PROVIDED UNDER PHASE 4 WORK.
4. DELETE NOTE
5. PULLBOX TO BE PROVIDED UNDER THIS CONTRACT. SEE E-2 FOR LOCATION.
6. 2-5" CONDUITS EACH WITH 4 #600 MCM COPPER CONDUCTORS. TERMINATE AS REQUIRED BY THE UTILITY COMPANY.
7. EMERGENCY ENGINE GENERATOR SET TO BE PROVIDED UNDER PHASE 4 WORK.
8. DISTRIBUTION PANEL TO BE PROVIDED UNDER PHASE 4 WORK.
9. FEEDERS AND CONTROLS TO BE PROVIDED UNDER PHASE 4 WORK.
10. PORTIONS OF 3" CONDUIT FOR FEEDER AND 1¼" CONDUIT FOR CONTROLS TO BE PROVIDED UNDER PHASE 4 WORK.
11. PORTIONS OF 3" CONDUIT FOR FEEDER AND 1¼" CONDUIT FOR CONTROLS BETWEEN TRANSFER SWITCH AND PROJECT LIMIT LINE TO BE PROVIDED UNDER THIS CONTRACT.
12. PROVIDE TRANSFER SWITCH.
13. PROVIDE FUSE, SIZED FROM EQUIPMENT SUPPLIER'S SHOP DRAWINGS.
14. INSTALL AS REQUIRED FROM SUPPLIER'S SHOP DRAWING. TYPICAL.
15. FULLY RATED CIRCUIT BREAKER

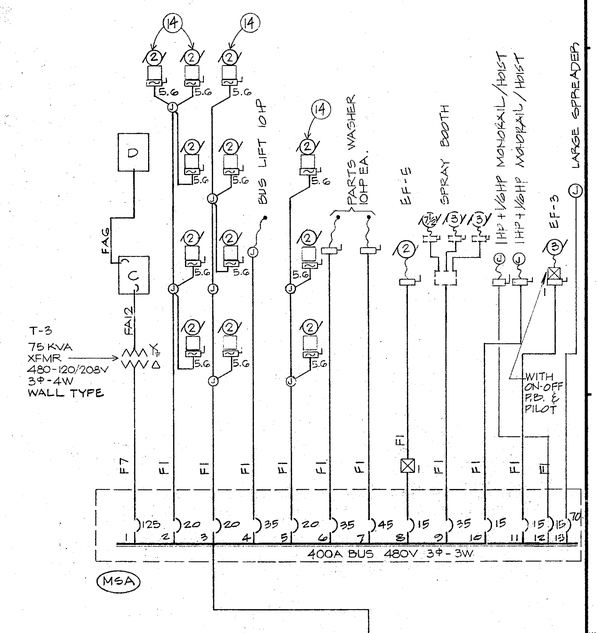

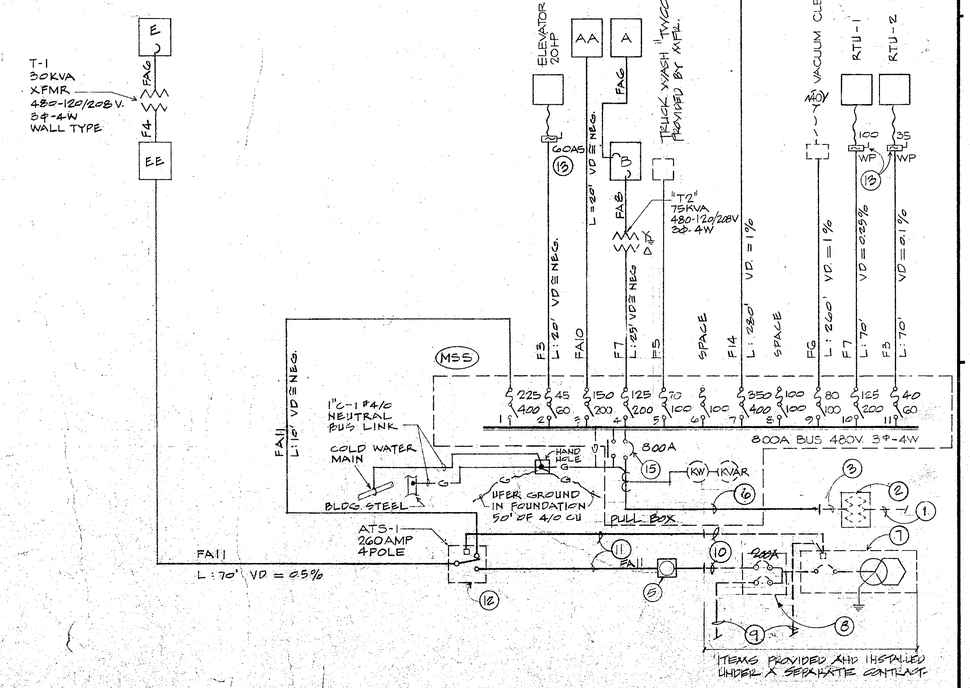

"MSS" LOAD SCHEDULE
480/277V. 3Φ-4W

1	'EE'	111.7 KVA
2	ELEVATOR 20HP	22.5 KVA
3	'AA'	118.4 KVA
4	T-2	53.2 KVA
5	"TWCC"	20.2 KVA
6	SPACE	—
7	'MSA'	180.0 KVA
8	SPACE	—
9	VACUUM CL.	43.4 KVA
10	RTU-1	61.8 KVA
11	RTU-2	25.0 KVA
		645.2 KVA
+25% LML		10.8 KVA
TOTAL		656.0 KVA

656.0KVA @ 480V. 3Φ = 787.2 AMP

"MSA" LOAD SCHEDULE
480V. 3Φ-3W

1	T-3	41.6 KVA
2	2HP x 3	14.2 KVA
3	2HP x 4	11.3 KVA
4	10HP	11.7 KVA
5	2HP x 3	8.5 KVA
6	10HP	11.7 KVA
7	10HP	11.7 KVA
8	2HP	2.8 KVA
9	7½HP, 3HP x 2	17.2 KVA
10	1HP + 1/2HP	1.8 KVA
11	3HP	4.0 KVA
12	1HP + 1/2HP	1.8 KVA
13	SPREADER,	41.7 KVA
TOTAL		180.0 KVA

1800KVA @ 480V. 3Φ = 216.0 AMP

FEEDER TABLE - COPPER CONDUCTORS

(See specification for insulation type and grounding requirements.)

BKR OR FUSE AMPS	3 WIRE FDR NO	3 WIRE WIRE AWG-MCM	3 WIRE CONDUIT INCHES	3 WIRE GRD WIRE AWG	3 WIRE CONDUIT W/GRD INCHES	4 WIRE FDR NO	4 WIRE WIRE AWG-MCM	4 WIRE CONDUIT INCHES	4 WIRE GRD WIRE AWG	4 WIRE CONDUIT W/GRD INCHES	2 WIRE FDR NO	2 WIRE WIRE AWG-MCM	2 WIRE CONDUIT INCHES	2 WIRE GRD WIRE AWG	2 WIRE CONDUIT W/GRD INCHES
20	F1	(3)12	3/4	12	3/4	FA1	(4)12	3/4	12	3/4	FB1	(2)12	3/4	12	3/4
30	F2	(3)10	3/4	10	3/4	FA2	(4)10	3/4	10	3/4	FB2	(2)10	3/4	10	3/4
40	F3	(3)8	1	10	1	FA3	(4)8	1	10	1	FB3	(2)8	3/4	10	3/4
50	F4	(3)6	1	10	1	FA4	(4)6	1	10	1-1/4	FB4	(2)6	3/4	10	1
70	F5	(3)4	1	8	1-1/4	FA5	(4)4	1-1/4	8	1-1/4	FB5	(2)4	1	8	1
90	F6	(3)2	1-1/4	8	1-1/4	FA6	(4)2	1-1/4	8	1-1/2	FB6	(2)2	1	8	1
125	F7	(3)1	1-1/4	6	1-1/2	FA7	(4)1	1-1/2	6	2	FB7	(2)1	1-1/4	6	1-1/4
150	F8	(3)1/0	1-1/2	6	1-1/2	FA8	(4)1/0	2	6	2	FB8	(2)1/0	1-1/4	6	1-1/4
175	F9	(3)2/0	1-1/2	6	2	FA9	(4)2/0	2	6	2	FB9	(2)2/0	1-1/2	6	1-1/2
200	F10	(3)3/0	2	6	2	FA10	(4)3/0	2	6	2-1/2	FB10	(2)3/0	1-1/2	6	1-1/2
225	F11	(3)4/0	2	2	2	FA11	(4)4/0	2-1/2	2	2-1/2					
250	F12	(3)250	2-1/2	2	2-1/2	FA12	(4)250	2-1/2	2	3					
300	F13	(3)350	2-1/2	2	3	FA13	(4)350	3	2	3					
350	F14	(6)2/0	(2)1-1/2	(2)2	(2)2	FA14	(8)2/0	(2)2	(2)2	(2)2					
400	F15	(6)3/0	(2)2	(2)2	(2)2	FA15	(8)3/0	(2)2	(2)2	(2)2-1/2					
450	F16	(6)4/0	(2)2	(2)1	(2)2-1/2	FA16	(8) 4/0	(2)2-1/2	(2)1	(2)2-1/2					
500	F17	(6)250	(2)2-1/2	(2)1	(2)2-1/2	FA17	(8)250	(2)2-1/2	(2)1	(2)3					
600	F18	(9)3/0	(3)2	(3)1	(3)2	FA18	(12)3/0	(3)2	(3)1	(3)2-1/2					
700	F19	(9)250	(3)2-1/2	(3)1/0	(3)2-1/2	FA19	(12)250	(3)2-1/2	(3)1/0	(3)3					
800	F20	(9)350	(3)2-1/2	(3)1/0	(3)3	FA20	(12)350	(3)3	(3)1/0	(3)3					
1000	F21	(12)250	(4)2-1/2	(4)2/0	(4)2-1/2	FA21	(16)250	(4)2-1/2	(4)2/0	(4)3					
1200	F22	(12)350	(4)2-1/2	(4)3/0	(4)3	FA22	(16)350	(4)3	(4)3/0	(4)3					
1600	F23	(15)500	(5)3	(5)4/0	(5)3	FA23	(20)500	(5)3-1/2	(5)4/0	(5)3-1/2					

NOTES:

1. Conduit sizes are minimum. Increase for long or difficult runs.
2. Above 86 degrees F ambient, increase wire size per NEC.
3. Provide ground wire for non-metallic conduit and where specified.

HAYAKAWA ASSOCIATES
CONSULTING ENGINEERS
PHONE (213) 879-4477
1180 SO. BEVERLY DR. LOS ANGELES, CALIF. 90035

REGISTERED PROFESSIONAL ENGINEER
SAMUEL FULCHIGNONI
E-17168
ELECTRICAL ENGINEER
STATE OF CALIFORNIA

HUGH GIBBS & DONALD GIBBS
Architects F.A.I.A.
3575 Long Beach Boulevard, Long Beach, California

DRAWN	DATE
Y.C.F.	
CHECKED	JOB
	1791

TORRANCE TRANSIT FACILITY

TORRANCE
CALIFORNIA

FEDERAL PROJECT NO.
CA-03-0208-01

SINGLE LINE DIAGRAM

SHEET E-3

DIETERICH-POST CLEARPRINT 1020

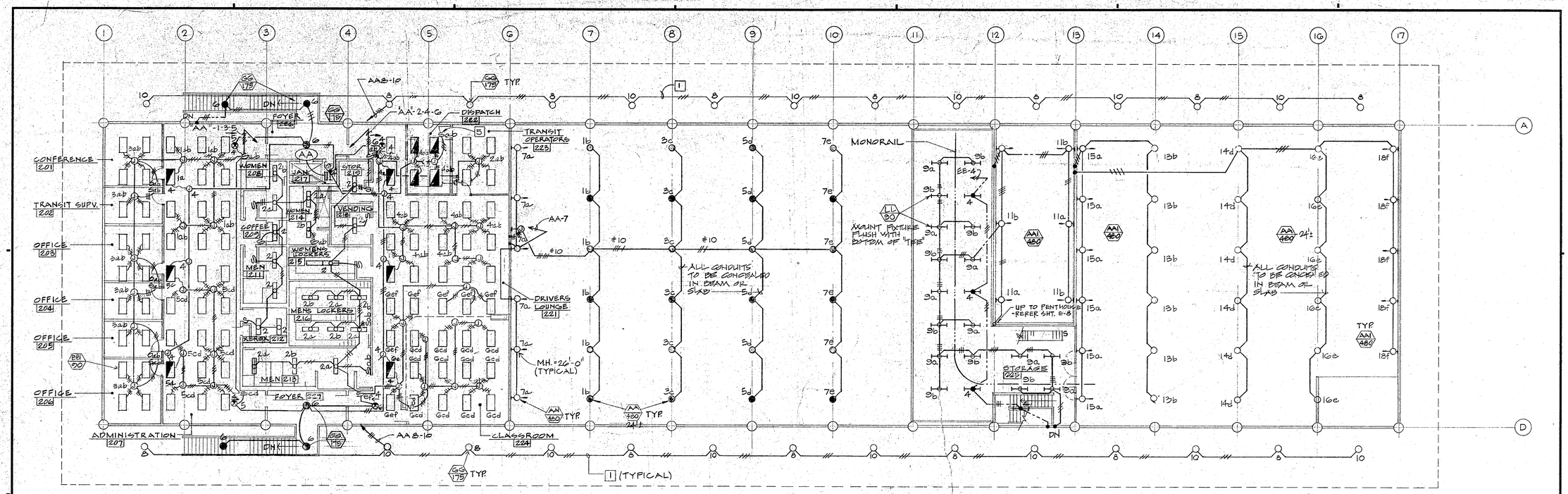

SECOND FLOOR LIGHTING PLAN

SCALE: 3/32" = 1'-0"

1. RUN CONDUIT IN ROOF SLAB.
2. ALL 2'x4' FIXTURES ON THIS FLOOR ARE TYPE 'BB' UNLESS SHOWN OTHERWISE
3. ALL EXIT LIGHT FIXTURES ARE TYPE 'XX'
4. ALL 1'x4' FIXTURES ON THIS FLOOR ARE TYPE 'CC' UNLESS SHOWN OTHERWISE
5. MOUNT SWITCH IN CAGE WORK AS DIRECTED BY ARCHITECT.

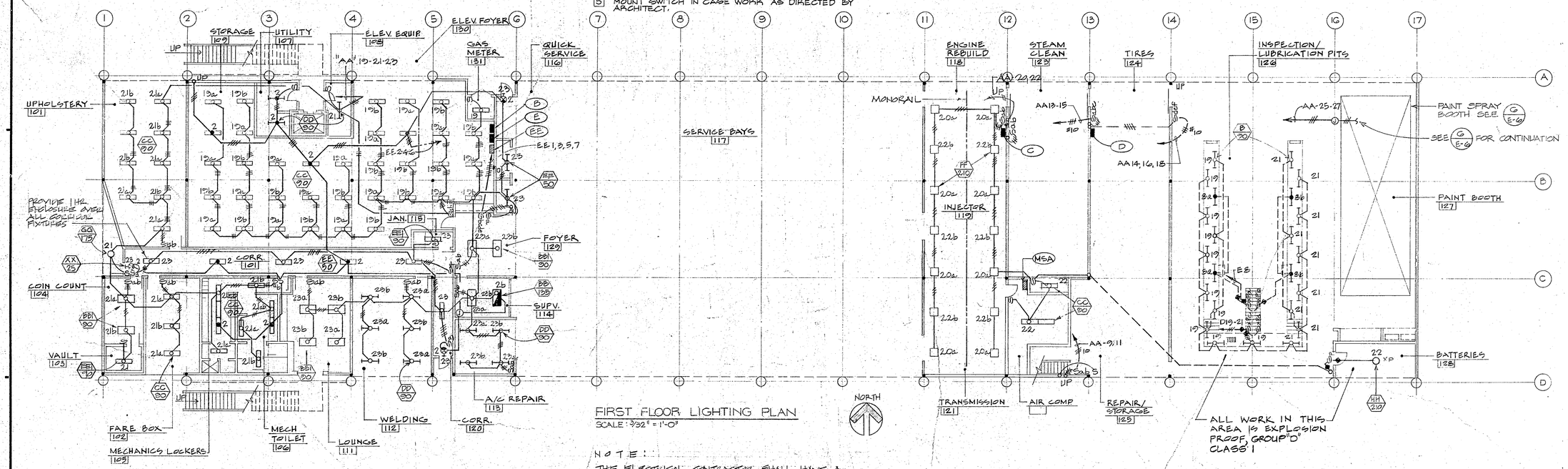

FIRST FLOOR LIGHTING PLAN

SCALE: 3/32" = 1'-0"

NOTE:

THE ELECTRICAL CONTRACTOR SHALL HAVE A PRE-JOB MEETING WITH THE ARCHITECT PRIOR TO RUNNING ANY EXPOSED CONDUITS.

HAYAKAWA ASSOCIATES
CONSULTING ENGINEERS
PHONE (213) 879-4477
1180 SO. BEVERLY DR. LOS ANGELES, CALIF. 90035

HUGH GIBBS & DONALD GIBBS
Architects F.A.I.A.
3575 Long Beach Boulevard, Long Beach, California

DRAWN Y.C.F.	DATE
CHECKED	JOB 1791

TORRANCE TRANSIT FACILITY

TORRANCE
CALIFORNIA

FEDERAL PROJECT NO. CA-03-0203-01

FIRST & SECOND FLOOR LIGHTING PLAN

SHEET E-7

DIETERICH-POST CLEARPRINT 1020

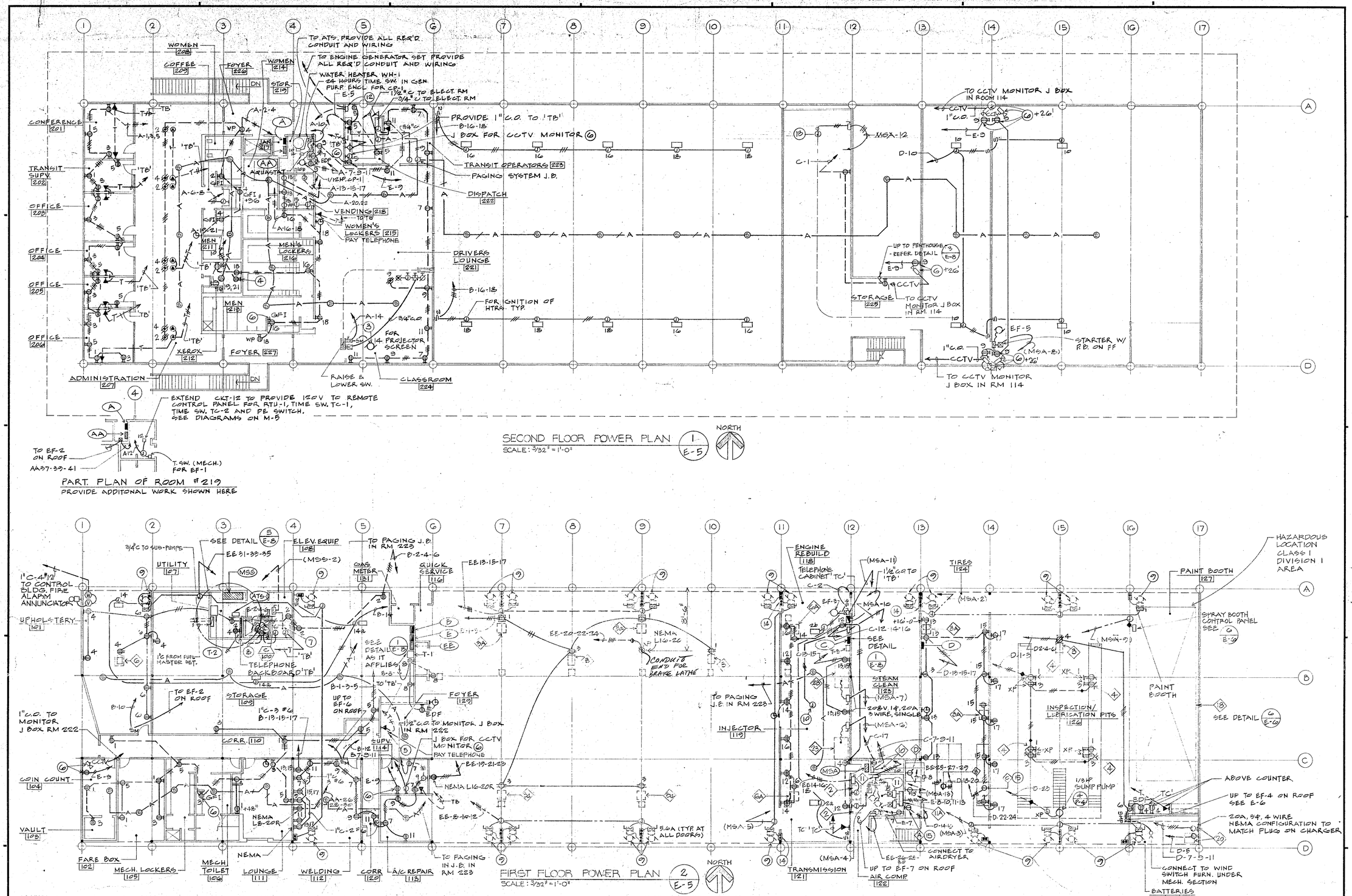

EQUIPMENT DESIGNATION

ITEM	DESCRIPTION	KW/HP	VOLTAGE	AMP	CONNECTION	REMARKS
2	BUS LIFT POWER UNIT	10 HP	480/3Φ		SHOWN	CONNECT AS REQ'D.
3	SERVICE REEL		120	1.5	RECEPT.	CONNECT AS REQ'D.
3A	SERVICE REEL		120	3.0	RECEPT.	CONNECT AS REQ'D.
6	SERVICE REEL		120	1.5	RECEPT.	EXPLOSION PROOF
6	SERVICE REEL		120	1.5	RECEPT.	EXPLOSION PROOF
6A	SERVICE REEL		120	1.5	RECEPT.	EXPLOSION PROOF
10	STEAM CLEANER	5 HP	208/3Φ		DISC. SWITCH AND RECEPT.	CONNECT AS REQ'D.
11	AIR COMPRESSOR PACKAGE	2 - 7 HP	480/3Φ		SHOWN	CONNECT AS REQ'D.
11B	AIR DRYER/ AFTER COOL	2 - 1 HP	208/3Φ		SHOWN	CONNECT AS REQ'D.

EQUIPMENT DESIGNATION

ITEM	DESCRIPTION	KW/HP	VOLTAGE	AMP	CONNECTION	REMARKS
18	PAINT BOOTH	1 - 7½HP 2 - 3 HP	480/3Φ		SHOWN	CONNECT AS REQ'D.
20	BATTERY CHARGER	N.I.C.	120 & 208/3Φ		RECEPT. WIRED ROUGH-IN ONLY	
21	UNDERGROUND DIESEL TANK	3/4 HP	208/1Φ		AS REQUIRED BY INSTALLER	
22	FUEL DISPENSERS				CONNECT AS REQUIRED	
23	PARTS WASHER	10 HP	480/3Φ		SHOWN	CONNECT AS REQ'D.
27	BUS VACUUM CLEANER	40 HP	480/3Φ		SHOWN	CONNECT AS REQ'D.
28	GASOLINE TANK	3/4 HP	208/1Φ		AS REQUIRED BY INSTALLER	

NOTES

1. ALL OUTLETS IN SERVICE AND INSPECTION AREAS SHALL BE MOUNTED AT +4'-0" UNLESS NOTED OTHERWISE.
2. VERIFY EXACT LOCATION OF ALL EQUIPMENT AND ROUGH-IN REQUIREMENTS PRIOR TO DOING THE WORK.
3. CONNECT PROJECTOR SCREEN MOTOR AS REQUIRED BY MANUFACTURERS DIAGRAMS.
4. OUTLET CONFIGURATION TO MATCH PLUG FURNISHED WITH XEROX MACHINE. VERIFY. 30A
5. INSTALL AS DIRECTED BY TELEPHONE COMPANY.
6. FOR EXACT LOCATION AND HEIGHT, SEE ARCHITECTURAL DRAWINGS.
7. ELEVATOR CONTROLLER. MAKE CONNECTIONS AS REQUIRED BY ELEVATOR INSTALLER.
8. MOUNT IN ELEVATOR PIT.
9. MOTORIZED DOOR OPERATOR PACKAGE COMPLETE WITH 2 HP, 480V, 3Φ MOTOR, MOTOR CONTROLLER AND PUSH BUTTONS ASSEMBLY ARE FURNISHED WITH DOOR. INSTALL AND CONNECT AS REQUIRED BY MANUFACTURER'S SHOP DRAWINGS. PROVIDE FUSED DISCONNECT IN G. P. ENCLOSURE. SIZE FUSES PER MANUFACTURERS RECOMMENDATION.
10. JUNCTION BOX FOR MONORAIL HOIST. VERIFY LOCATION WITH ARCHITECT. SEE ARCHITECTURAL DRAWING.
11. ALTERNATOR ON AIR COMPRESSOR
12. REMOTE GENERAL OR ALARM PANEL SEE SPECS.
13. SAME AS ITEM #10.
14. MOUNT ON EACH SIDE OF BLOCK WALL.
15. 208V. 1Φ, 30A RECEPTACLE.

EQUIPMENT DESIGNATION				
ITEM	DESCRIPTION	VOLTAGE	AMP	PHASE
A	LARGE ALUM WHEEL BREAKER	208	20	1
B	LARGE SPLIT RIM BREAKER	208	10.6	1
C	SMALL TIRE BALANCER	208	20	1
D	LARGE AIR SPREADER	110	10	1

REGISTERED PROFESSIONAL ENGINEER
E 8758
DANIEL SUCHMAN
ELECTRICAL ENGINEER
STATE OF CALIFORNIA

HAYAKAWA ASSOCIATES
CONSULTING ENGINEERS
PHONE (213) 879-4477
1900 SO. BEVERLY DR. LOS ANGELES, CALIF. 90035

HUGH GIBBS & DONALD GIBBS
Architects F.A.I.A.
3575 Long Beach Boulevard, Long Beach, California

DRAWN	Y.C.F.	DATE	
CHECKED		JOB	1791

TORRANCE TRANSIT FACILITY

TORRANCE
CALIFORNIA

FEDERAL PROJECT NO. CA-03-0203-01

FIRST & SECOND FLOOR POWER & SIGNAL PLANS

SHEET 1 OF 5 SHEETS

DIETERICH-POST CLEARPRINT 1020

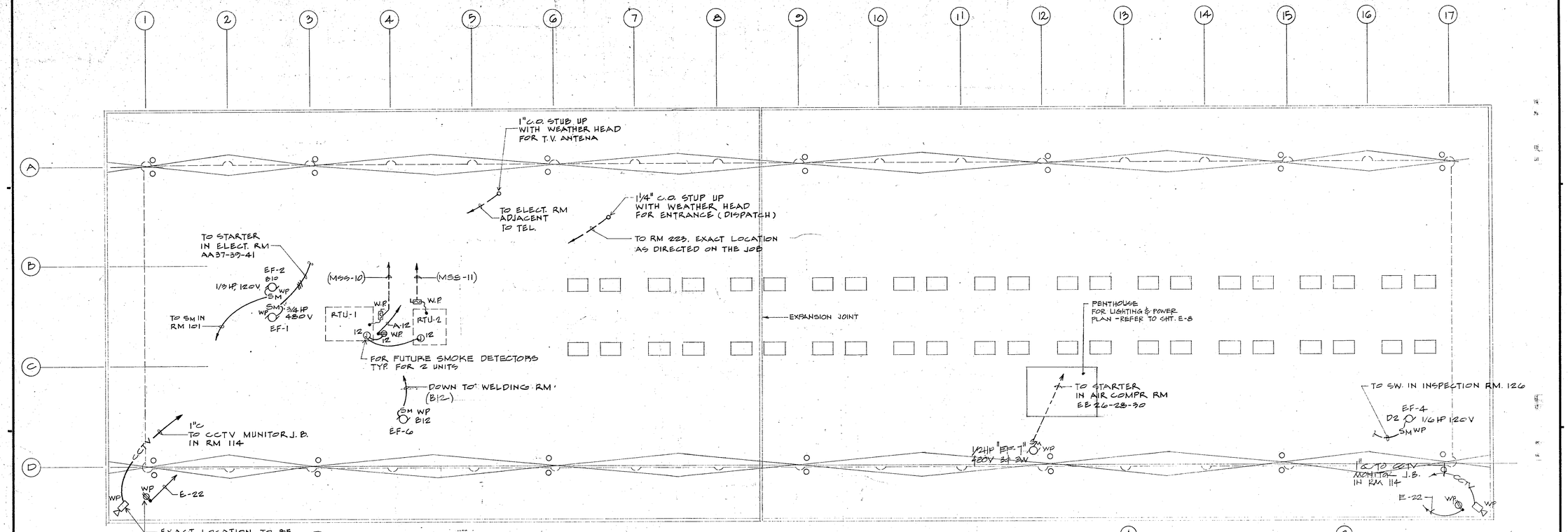

ELECTRICAL ROOF PLAN 1 E-6
SCALE: 3/32" = 1'-0"

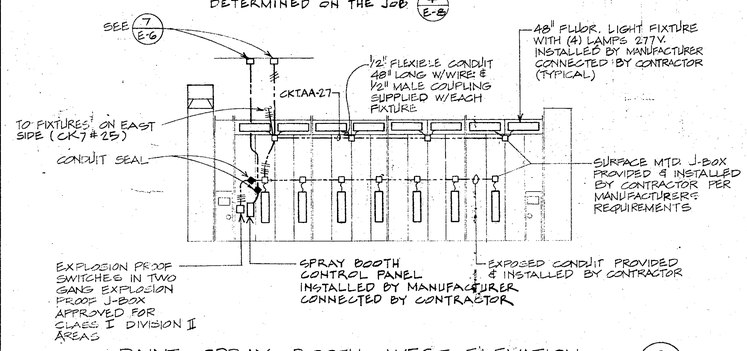

PAINT SPRAY BOOTH WEST ELEVATION 6 E-6
NO SCALE
NOTE: EAST ELEVATION IS SIMILAR EXCEPT REVERSED WITH NO LIGHT SWITCHES. OR CONTROL PANEL

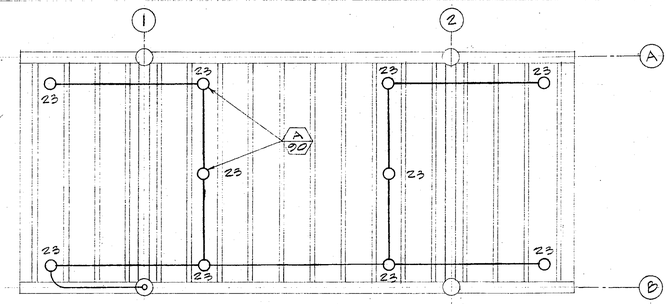

FUEL STATION LIGHTING PLAN 2 E-6
SCALE: 1/8" = 1'-0"

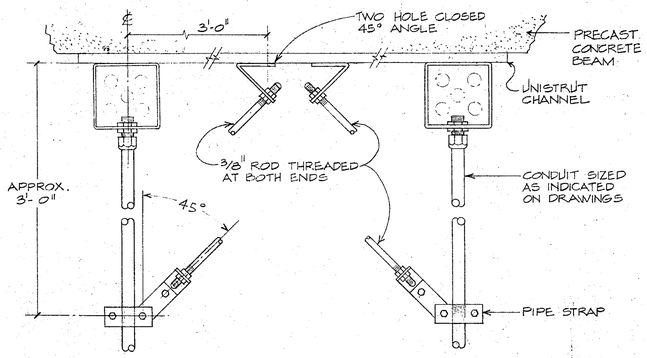

CONDUIT SUPPORT DETAIL 7 E-6
NO SCALE

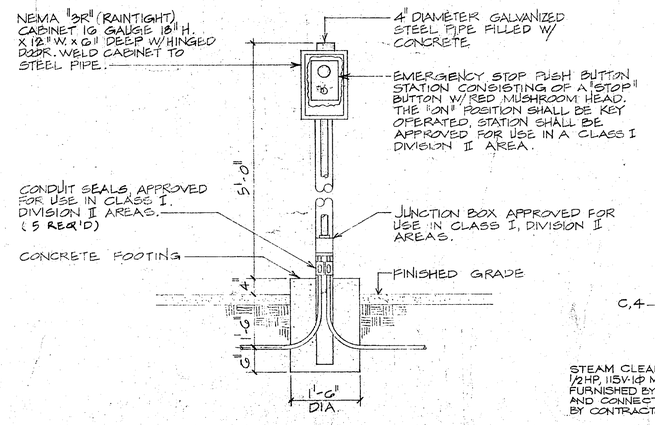

EMERGENCY SHUTDOWN STATION DETAIL 5 E-5
NO SCALE

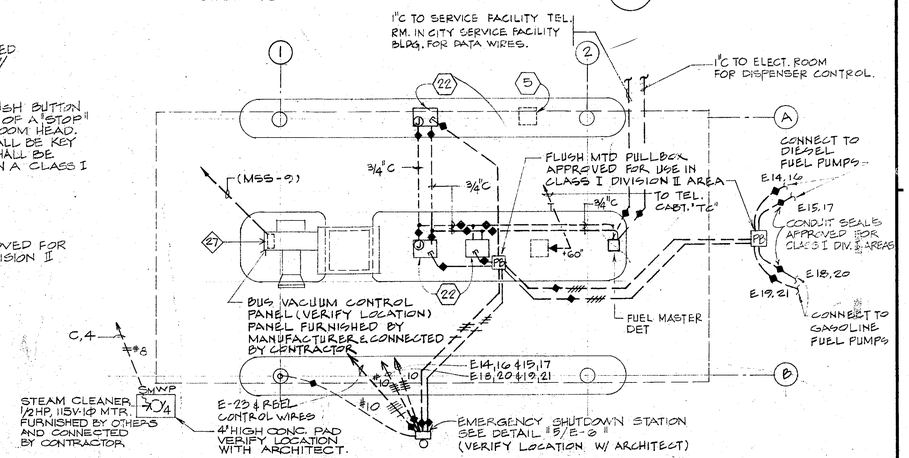

FUEL STATION POWER PLAN 3 E-6
SCALE: 1/8" = 1'-0"

HAYAKAWA ASSOCIATES
CONSULTING ENGINEERS
PHONE (213) 879-4477
1180 SO. BEVERLY DR. LOS ANGELES, CALIF. 90035

HUGH GIBBS & DONALD GIBBS
Architects F.A.I.A.
3575 Long Beach Boulevard, Long Beach, California

DRAWN Y.C.F.	DATE
CHECKED	JOB 1791

TORRANCE TRANSIT FACILITY

TORRANCE
CALIFORNIA

FEDERAL PROJECT NO. CA-03-0203-01

ROOF PLAN & FUEL STATION DETAILS

SHEET 6

DIETERICH-POST CLEARPRINT 1020

PANEL "AA" SCHEDULE — 277/480V - 3Ø - 4W

225 A. (LUGS ONLY) ____ A. (MAIN BKR.) ☒ SURF ☐ REC

CIR. NO.	O	Ø	DESCRIPTION	ØA	ØB	ØC	BKR. P	BKR. A	LOCKOUT X	TS OR SETTING
1	12		2ND FLOOR OFFICES	3225			1	20		
2	26		TOILETS & OFFICES	2620						
3	16		2ND FLOOR OFFICES		1980					
4	18		DRIVERS LOUNGE		2140					
5	17		2ND FLOOR OFFICES			1895				
6	21		DRIVERS LOUNGE			2630				
7	6		SERVICE BAYS	2880						
8	4		PARAPET LTG	2940						1
9	16		STORAGE AREA		1440					
10	14		PARAPET LTG		2940					2
11	10		STEAM CLEAN, ROOF			3280				
12			SPARE							
13	6		LUBE PITS	2880						
14	6		LUBE PITS	2880						
15	6		TIRE REPAIR		2880					
16	6		LUBE PITS		2880					
17			SPARE							
18	5		LUBE PITS			2400				
19	33		STOREROOM	2970						
20	3		ENG. REBLD.	1680						
21	23		UPHOLSTERY & TOILETS		2190					
22	10		ENG. REBLD		1740					
23	27		CORR. WELDING & LOUNGE			2700				
24			SPARE			—				
25	15		SPRAY BOOTH LTG	2700			∨	∨		
26		1	WELDING OUTLET	3000			3	20		
27	15		SPRAY BOOTH LTG		2700		1	20		
28					3000					
29			SPARE				1	20		1
30						3000	/	/		
31			SPARE							2
32			TIME SWITCH	100			1	20		
33			SPARE		—					
34					—					
35						—				
36			↓			—	∨	∨		
37			EF-1 3/4HP	498			3	15		1 ①
38			SPARE				1	20		
39			—		498					
40			SPARE				1	20		
41			—			498				
42			SPARE				1	20		
TOTAL VA			67,514	26673	24388	16453				

(NORMAL LOAD) 10.6 KVA + (LCL LOAD) 56.9 KVA x 1.25
+ (SPARE LOAD) 16.9 KVA + (SPARE LCL LOAD) ____ KVA x 1.25
= DESIGN LOAD 98.6 KVA 118.4 AMPS

① CONTROLLED BY 3 POLE CONTACTOR (LC) & 1P, DT ASTRO DIAL TIME SWITCH (CIRC 32)

② CONTROLLED BY SEPARATE TIME SWITCH.

PANEL "EE" SCHEDULE — 277/480V - 3Ø - 4W

225 A. (LUGS ONLY) ____ A. (MAIN BKR.) ☒ SURF ☐ REC

CIR. NO.	O	Ø	DESCRIPTION	ØA	ØB	ØC	BKR. P	BKR. A	LOCKOUT X	TS OR SETTING
1	6		SERVICE BAYS	2880			1	20		
2	12		FIRST FLR LTG	765						
3	6		SERVICE BAYS		2880					
4	21		SECOND FLR LTG		1440					
5	6		SERVICE BAYS			2880				
6	4		STAIRS			1920				1
7	6		SERVICE BAYS	2880			∨	∨		
8			2HP x 4	3765			3	20		
9			SPARE				1	20		
10					3765					
11			SPARE				1	20		
12			—			3765	/	/		
13			2HP x 4	3765			3	20		
14			BUS LIFT 10HP	3875			3	35		
15			—		3765		/	/		
16			—		3875		/	/		
17			—			3765	/	/		
18			—			3875	/	/		
19		1	CONV OUT	3000			3	20		
20		1	CONV OUT	3000			3	20		
21			—		3000		/	/		
22			—		3000		/	/		
23			—			3000	/	/		
24			—			3000	/	/		
25			AIR COMPRESSOR 15HP	5813			3	50		
26			EF-7 3/4HP	382			3	15		
27			—		5813		/	/		
28			—		382		/	/		
29			—			5813	/	/		
30			—			382	/	/		
31			2HP x 3	2823			3	20		
32			SPARE				1	20		
33			—		2823		/	/		
34			SPARE				1	20		
35			—			2823	/	/		
36			SPARE				1	20		
37			"				1	20		
38			PANEL 'E'	5532			3	50		
39			SPARE				1	20		
40			—		6242		/	/		
41			SPARE				1	20		
42			—			5228	/	/		
TOTAL VA			111,754	38486	36811	36457				

(NORMAL LOAD) 26.3 KVA + (LCL LOAD) 15.6 KVA x 1.25
+ (SPARE LOAD) 24.0 KVA + (SPARE LCL LOAD) ____ KVA x 1.25
= DESIGN LOAD 139.7 KVA 167.6 AMPS

PANEL "A" SCHEDULE — 120/208V - 3Ø - 4W

100 A. (LUGS ONLY) ____ A. (MAIN BKR.) ☒ SURF ☐ REC

CIR. NO.	O	Ø	DESCRIPTION	ØA	ØB	ØC	BKR. P	BKR. A	LOCKOUT X	TS OR SETTING
1		7	OFFICES	1260			1	20		
2		5	GENERAL OFFICES	900						
3		7	OFFICES		1260					
4		6	GENERAL OFFICES		1080					
5		6	OFFICES			1080	∨	∨		
6		1	TABLE TOP UNIT			1000	2	20		
7		4	EDP. DRIVERS LGE.	1140			1	20		
8			—	1000			/	/		
9		5	DRIVERS LOUNGE		900		1	20		
10			CP-1 & WH-1		1800					
11		4	DRIVERS LOUNGE			720				
12		1	CONTROLS			360				
13		2	VENDING MACH.	780						
14		1	PROJECTION SCREEN	500						
15		2	VENDING MACH.		1200					
16		5	TOILETS		900					
17		1	VENDING MACH.			600				
18		4	DRIVERS LOUNGE			720	∨	∨		
19		1	XEROX MACH.	1000			2	30		
20			KITCHEN UNIT	3050			2	30		
21			—		1000		/	/		
22			—		3050		/	/		
23							1	20		
24			SPARE							
25										
26			SPARE							
27										
28										
29										
30			↓				∨	∨		
31										
32										
33										
34										
35										
36										
37										
38										
39										
40										
41										
42										
TOTAL VA			25,300	9630	11190	4480				

(NORMAL LOAD) 25.3 KVA + (LCL LOAD) ____ KVA x 1.25
+ (SPARE LOAD) 2.6 KVA + (SPARE LCL LOAD) ____ KVA x 1.25
= DESIGN LOAD 27.9 KVA 77.3 AMPS

PANEL "B" SCHEDULE — 120/208V - 3Ø - 4W

____ A. (LUGS ONLY) 225 A. (MAIN BKR.) ☒ SURF ☐ REC

CIR. NO.	O	Ø	DESCRIPTION	ØA	ØB	ØC	BKR. P	BKR. A	LOCKOUT X	TS OR SETTING
1		6	LOUNGE & WELDING	1080			1	20		
2		4	STORAGE & UPHOLSTERY	720						
3		5	LOUNGE & WELDING		900					
4		4	STORAGE & UPHOLSTERY		720					
5		6	LOUNGE & WELDING			1080				
6		4	UPHOLSTERY			720				
7		6	SHOP OUTLET	1080						
8		4	EDP, STORAGE	1140						
9		5	SHOP OUTLETS		900			∨		
10			1/3HP EF2		223			15		
11		4	SHOP OUTLETS			720		20		
12			1/4HP EF6			667	∨	15		
13		1	WELDING OUTLETS	5000			3	60		
14			IGNITION ON HTRS	540			1	20		
15		1	—		5000		/	/		
16			IGNITION ON HTRS		900		2	20		
17		1	—			5000	/	/		
18			IGNITION ON HTRS			900	/	/		
19			SPARE				1	20		
20										
21										
22										
23										
24										
25			↓				∨	∨		
26			PANEL 'A'	9630			3	100		
27			SPARE				1	20		
28			—		11190		/	/		
29			SPARE				1	20		
30			—			4480	/	/		
31										
32										
33										
34										
35										
36										
37										
38										
39										
40										
41										
42										
TOTAL VA			53,165	19160	20438	13567				

(NORMAL LOAD) 53.2 KVA + (LCL LOAD) ____ KVA x 1.25
+ (SPARE LOAD) 13.3 KVA + (SPARE LCL LOAD) ____ KVA x 1.25
= DESIGN LOAD 66.5 KVA 184.2 AMPS

PANEL "C" SCHEDULE — 120/208V - 3Ø - 4W

____ A. (LUGS ONLY) 175 A. (MAIN BKR.) ☒ SURF ☐ REC

CIR. NO.	O	Ø	DESCRIPTION	ØA	ØB	ØC	BKR. P	BKR. A	LOCKOUT X	TS OR SETTING
1		5	STORAGE, ROOF	900			1	20		
2			IGNITION ON HTRS	180						
3			RADIO EQUIP.		1200					
4			STEAM CLEANER (1/2HP)		1200		3			
5			RADIO EQUIP.			1200				
6			SPARE			—	∨	∨		
7			STEAM CLEANER	2200			3	40		
8			SPARE				1	20		
9			—		2200		/	/		
10			SPARE				1	20		
11			—			2200	/	/		
12		6	O.H. REELS			1100	1	20		
13		2	CONV. OUTLET	1500			2	20		
14		6	O.H. REELS	1100			1	20		
15			—		1500		/	/		
16		5	O.H. REELS		900		1	20		
17			STEAM CLEANER			1000	1	20		
18			SPARE				1	20		
19			SPARE				1	20		
20			PANEL 'D'	7622			3	90		
21			SPARE				1	20		
22			—		8870		/	/		
23			SPARE				1	20		
24			—			6710	/	/		
25			SPACE							
26										
27										
28										
29										
30										
31										
32										
33										
34										
35										
36										
37										
38										
39										
40										
41										
42			↓							
TOTAL VA			41,582	13502	15870	12210				

(NORMAL LOAD) 41.6 KVA + (LCL LOAD) ____ KVA x 1.25
+ (SPARE LOAD) 3.3 KVA + (SPARE LCL LOAD) ____ KVA x 1.25
= DESIGN LOAD 50.5 KVA 139.9 AMPS

PANEL "D" SCHEDULE — 120/208V - 3Ø - 4W

100 A. (LUGS ONLY) ____ A. (MAIN BKR.) ☒ SURF ☐ REC

CIR. NO.	O	Ø	DESCRIPTION	ØA	ØB	ØC	BKR. P	BKR. A	LOCKOUT X	TS OR SETTING
1		4	LUBE PITS	720			1	20		
2			EF-4 1/2 HP	322			1	15		
3		4	LUBE PITS		720		1	20		
4		3	SERVICE BAYS		540					
5		1	BATTERY CHARGER			500				1
6		1	EDF			600	∨	∨		
7		1	BATTERY CHARGER	500			3	20		1
8			LARGE AIR SPREADER	1100			1	20		
9			—		500		/	/		1
10			IGNITION ON HTRS		720		1	20		
11			—			500	/	/		1
12			UNIT HEATERS			200	1	20		
13		5	SERVICE BAYS	900			1	20		
14			LARGE WHEEL CHANGER	2080			2	30		
15		7	SERVICE BAYS		1420		1	20		
16			—		2080		/	/		
17		5	SERVICE BAYS			900	1	20		
18			LARGE SPLIT RIM CHANGE			1100	2	20		
19	10		LUBE PITS	900			1	20		
20			—	1100			/	/		
21	9		LUBE PITS		810		1	20		
22			TIRE BALANCER		2080		2	30		
23			SUMP PUMP			830	1	15		
24			—			2080	/	/		
25			SPARE				1	20		
26										
27										
28										
29										
30			↓				∨	∨		
31										
32										
33										
34										
35										
36										
37										
38										
39										
40										
41										
42										
TOTAL VA			23,202	7622	8870	6710				

(NORMAL LOAD) 21.3 KVA + (LCL LOAD) 1.9 KVA x 1.25
+ (SPARE LOAD) 3.5 KVA + (SPARE LCL LOAD) ____ KVA x 1.25
= DESIGN LOAD 27.2 KVA 75.2 AMPS

1. CONTROLLED BY 4P 20A ELECTRICALLY HELD CONTACTOR ACTIVATED BY AIR SWITCH IN BATTERY RM.

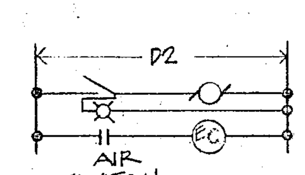

PANEL "E" SCHEDULE — 120/208V - 3Ø - 4W

____ A. (LUGS ONLY) 100 A. (MAIN BKR.) ☒ SURF ☐ REC

CIR. NO.	O	Ø	DESCRIPTION	ØA	ØB	ØC	BKR. P	BKR. A	LOCKOUT X	TS OR SETTING
1	2	3	OVERHEAD REELS	900			1	20		
2	1	1	ELEVATOR PIT	360						
3	2	3	OVERHEAD REELS		900					
4		2	TELEPHONE BKBD		360				*	
5		3	RADIO DISP.			540				
6		1	ELEVATOR CAB			600				
7		1	AIR DRYER	780						
8	4		LUBE PITS	360						
9		8	CCTV		1440		∨	∨		
10			DRYER & AFTER COOLER		800		2	20		
11			"			800	2	20		
12			DRYER & AFTER COOLER			800	/	/		
13			AIR AFTER COOLER	800			/	/		①
14			3/4HP FUEL COMP	794			2	15		
15			"		794		2	15		
16			—		794		/	/		
17			—			794	/	/		
18			3/4HP FUEL COMP			794	2	15		
19			"	794			2	15		
20			—	794			/	/		
21			—		794		/	/		
22		2	CCTV-ROOF		360		1	20		
23	10		FUEL STATION LTS			900	1	20		①
24			SPARE							
25										
26										
27										
28										
29										
30			↓				∨	∨		
31										
32										
33										
34										
35										
36										
37										
38										
39										
40										
41										
42										
TOTAL VA			17,002	5582	6242	5228				

(NORMAL LOAD) 15.6 KVA + (LCL LOAD) 1.4 KVA x 1.25
+ (SPARE LOAD) 6.2 KVA + (SPARE LCL LOAD) ____ KVA x 1.25
= DESIGN LOAD 23.5 KVA 65.0 AMPS

① PROVIDE A 12 POLE RELAY CONTROLLING CKTS 14-21 & 23

REGISTERED PROFESSIONAL ENGINEER — SAMUEL TULCHINSKY — E-5768 — ELECTRICAL ENGINEER — STATE OF CALIFORNIA

HAYAKAWA ASSOCIATES
CONSULTING ENGINEERS
PHONE (213) 879-4477
1180 SO. BEVERLY DR., LOS ANGELES, CALIF. 90035

HUGH GIBBS & DONALD GIBBS
Architects F.A.I.A.
3575 Long Beach Boulevard, Long Beach, California

DRAWN: Y.C.F. | DATE: | CHECKED: | JOB: 1791

TORRANCE TRANSIT FACILITY

TORRANCE CALIFORNIA

FEDERAL PROJECT NO. CA-03-0208-01

LOAD SCHEDULES

SHEET E-7

DIETERICH-POST CLEARPRINT 1020

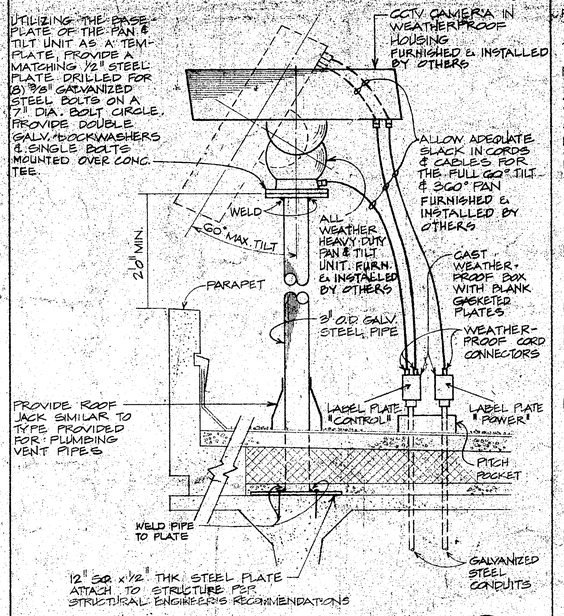

DETAIL - CAMERA MOUNTING (4 / E-8)
NO SCALE

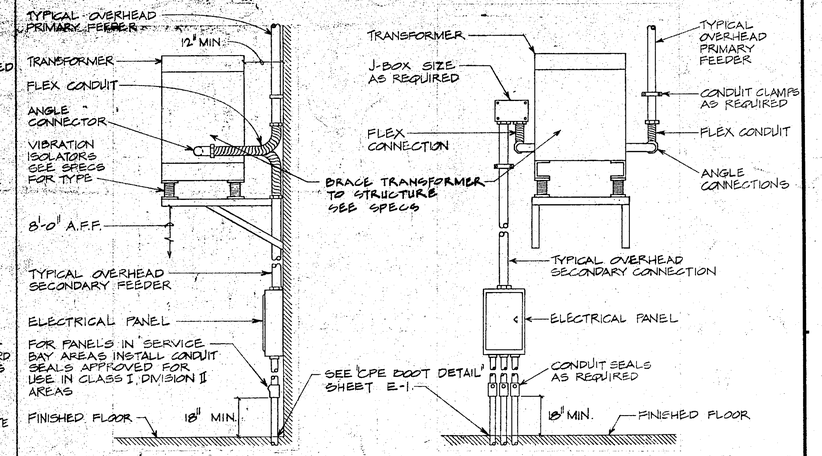

TYPICAL TRANSFORMER & PANEL CONNECTION DETAIL (1 / E-8)
NO SCALE. (USE THIS DETAIL AS IT APPLIES. SEE PLANS & SINGLE LINE)

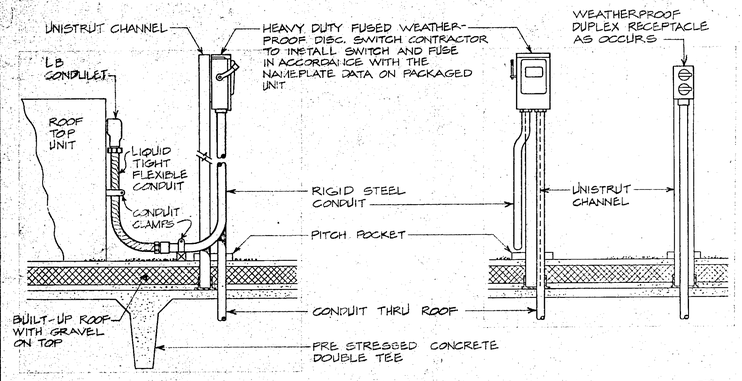

TYPICAL DISC-SWITCH & ROOF PENETRATION DETAIL (2 / E-8)
NO SCALE

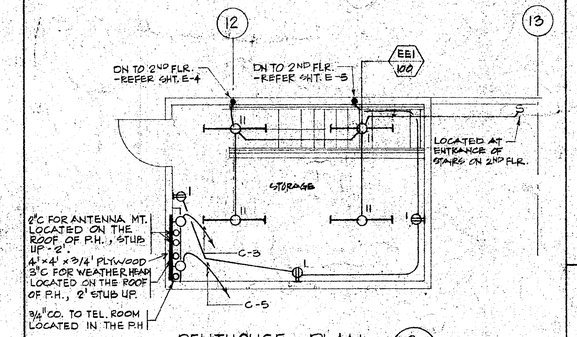

PENTHOUSE PLAN (3 / E-8)
SCALE: 1/4" = 1'-0"

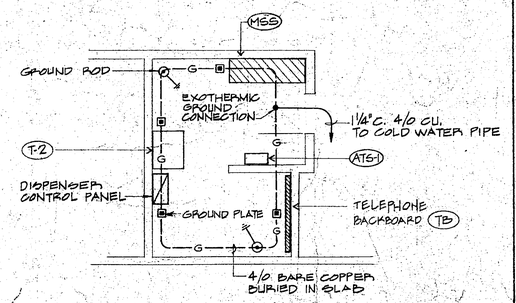

ENLARGED ELECT/TELE. ROOM (5 / E-8)
SCALE: 1/4" = 1'-0"

HUGH GIBBS & DONALD GIBBS
Architects F.A.I.A.
3575 Long Beach Boulevard, Long Beach, California

DRAWN R.B.	DATE
CHECKED	JOB 1791

TORRANCE TRANSIT FACILITY

TORRANCE CALIFORNIA

FEDERAL PROJECT NO. CA-03-0208-01

DETAILS

SHEET E-8

HAYKAMA ASSOCIATES
CONSULTING ENGINEERS
1900 CO BEVERLY DR. LOS ANGELES, CALIF. 90035

REGISTERED PROFESSIONAL ENGINEER
MARIO TACHIKAWA
ELECTRICAL ENGINEER
STATE OF CALIFORNIA

DIETERICH-POST CLEARPRINT 3020

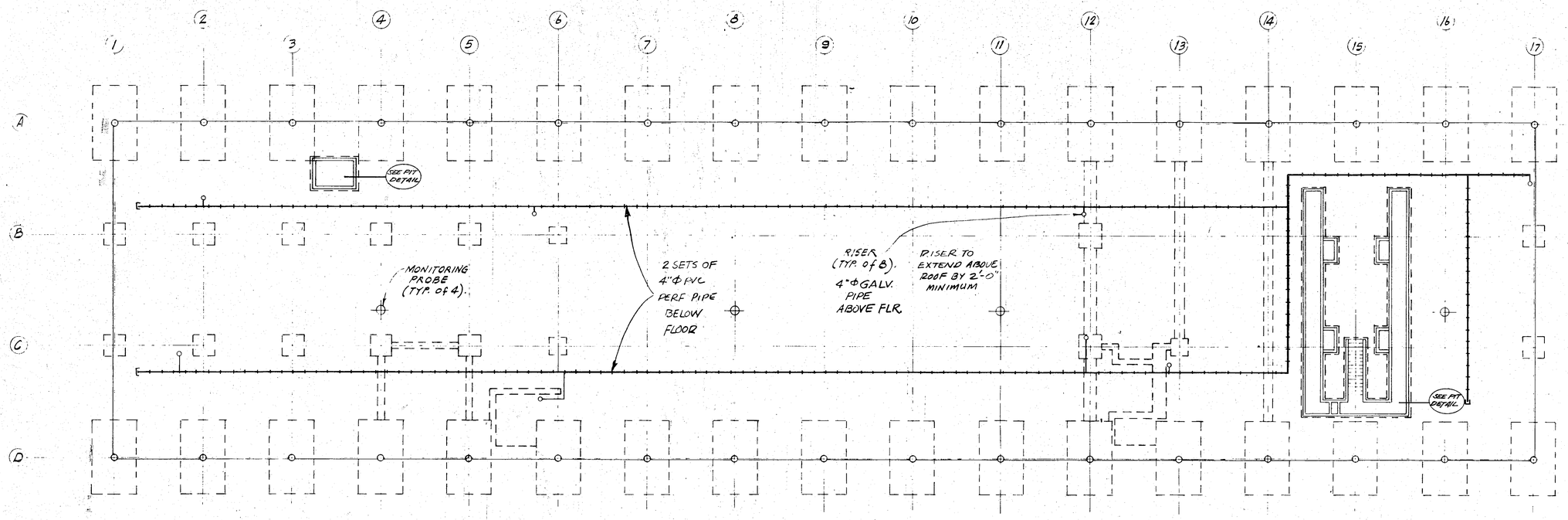

PLAN

LFG CONTROL SYSTEM FOR TRANSIT FACILITY

N

3/32" = 1'-0"

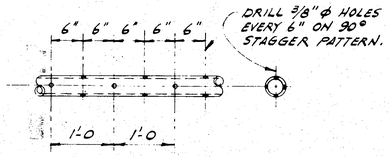

TYPICAL PERFORATED PIPE DETAIL

1" = 1'-0

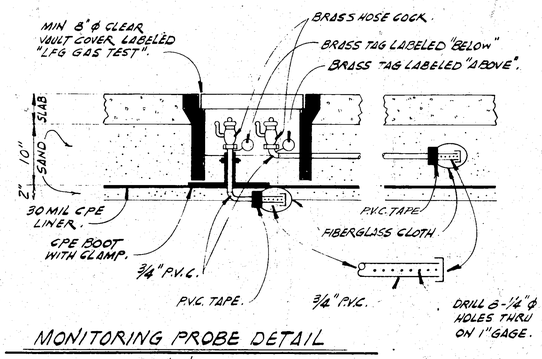

MONITORING PROBE DETAIL

1" = 1'-0

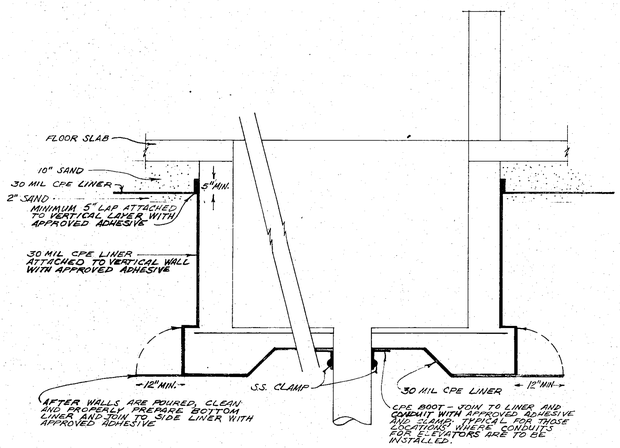

TYPICAL PIT DETAIL

NO SCALE

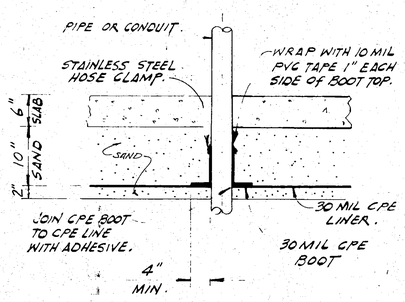

CPE BOOT DETAIL

1" = 1'-0

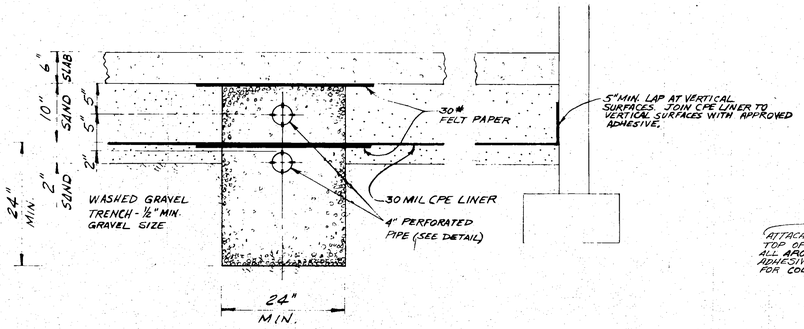

TYPICAL DETAIL AT PERFORATED PIPE

1" = 1'-0"

NOTE : ALL PIPE, CONDUIT OR OTHER PENETRATIONS OF THE CPE LINER SHALL BE SEALED WITH A CPE BOOT AS DETAILED. DO NOT DRIVE STAKES OR OTHER VERTICAL SUPPORTS FOR REINFORCING BAR, ETC. USE SUPPORTS WHICH REST AT THE SURFACE OF THE SAND LAYER.

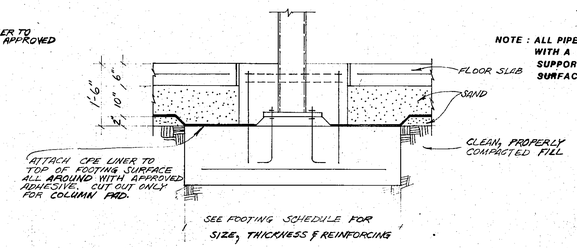

TYPICAL DETAIL FOR LINER ATTACHMENT AT FOOTINGS

SCALE: 1" = 1'-0"

REGISTERED PROFESSIONAL ENGINEER ROBERT L. LADDY III EXPIRES N. 31545 CIVIL STATE OF CALIFORNIA

BCL ASSOCIATES INCORPORATED
444 W. Ocean Blvd.
Long Beach, CA 90802

SCALE: SHOWN
DATE: 4/12/84
APPROVED BY:
DRAWN BY: CCS
REVISED: 4/23/84

LANDFILL GAS COLLECTER SYSTEM FOR TRANSIT FACILITY

DRAWING NUMBER

HUGH GIBBS & DONALD GIBBS
Architects F.A.I.A.
3575 Long Beach Boulevard, Long Beach, California

DRAWN	DATE
CHECKED	JOB 1806

TORRANCE TRANSIT FACILITY

TORRANCE CALIFORNIA

FLOOR PLAN DETAILS

SHEET LG 1

ROOF TOP UNIT (CARRIER)

NO.	TYPE & MODEL NO.	SERVICE	SUPPLY FAN CFM	SUPPLY FAN WHEEL DIA. IN.	SUPPLY FAN BLADE TYPE	SUPPLY FAN ESP IN WG.	SUPPLY FAN RPM	SUPPLY FAN HP	RETURN FAN CFM	RETURN FAN WHEEL DIA. IN	RETURN FAN BLADE TYPE	RETURN FAN ESP IN WG.	RETURN FAN RPM	RETURN FAN HP	OA TEMP °F DB	COOLING COIL TOTAL REQUIRED CAP. MBH	COOLING COIL SENSIBLE REQUIRED CAP. MBH	COOLING COIL ENT. A. °F DB	COOLING COIL ENT. A. °F WB	COOLING COIL LVG. A. °F DB	COOLING COIL LVG. A. °F WB	COOLING COIL NO OF ROWS	COOLING COIL MAX. FACE VEL.	COOLING COIL FINS/INCH.	COMPRESSOR NO.1 RLA	COMPRESSOR NO.1 LRA	COMPRESSOR NO.2 RLA	COMPRESSOR NO.2 LRA	CONDENSER FAN NO.-FLA	CONDENSER FACE AREA SF	CONDENSER FAN NO.-DIA.	HEATING SECTION (GAS)* INPUT MBH	HEATING SECTION (GAS)* OUTPUT MBH	HEATING SECTION (GAS)* NO. OF STAGES	ELECT. CHARACTERISTICS VOLTAGE	ELECT. CHARACTERISTICS PHAZE	ELECT. CHARACTERISTICS HZ	FILTER TYPE & EFF.	FILTER NO.	FILTER SIZE	FILTER INITIAL P.D. IN WG.	SUPPORT VIBR. ISOL. TYPE	REMARKS
RTU-1	VAV. 50 DF 028	1ST FLR & 2ND FLR	8,500	(2)-15	FC	1.20	1,004	7½	5,390	15	FC	0.25	700	3	95	250.0	168.5	81.0	66.4	55.8	55.5	4	480	15	27.5	120	14.3	86	(2)-3.3	38.0	(2)-30	—	—	—	460	3	60	THROWAWAY 30%	18	16"x25"x2"	0.08	D	W/ ECONOMIZER
RTU-2	CV. 48 DR 012	1ST FLR & 2ND FLR	3,110	(2)-10	FC	1.00	1,009	1½	—	—	—	—	—	—	95	67.2	67.2	78.0	61.8	57.0	54.0	2	212	14	10.5	49	10.5	49	(2)-2.1	18.4	(2)-22	231	183	2	460	3	60	THROWAWAY 30%	2 4	16"x20"x2" 16"x25"x2"	0.08	D	

* REQUIRED HEATING LOAD 150456 BTU/H AT OA TEMP. 36°F

FANS

NO.	MFGR. TYPE & MODEL NO.	LOCATION	SERVICE	CFM	RPM	WHEEL DIAMETER INCHES	S.P. IN INCHES W.G.	O.V. OR T.S. FPM	FAN BLADE	MOTOR HP	MOTOR RPM	MOTOR VOLTAGE	VIBRATION ISOLATOR TYPE	VIBRATION ISOLATOR STATIC DEFLECTION	REMARKS
EF-1	EXITAIRE G-2414	ROOF	TOILETS EXHAUST	2,890	585	24	½	3,744	BI	¾	1,750	460V-3Φ-60HZ	NEOPRENE PAD	—	
EF-2	EXITAIRE G-1815	ROOF	UPHOLSTERY	1,820	800	18	½	3,840	BI	⅓	↓	115V-1Φ-60HZ	↓	—	
EF-3	HARVEY INDUSTRIES 150-T UTILITY	STORAGE 225	BUG EXHAUST	3200	1,750	15	3½	2,036	BI	3		460V-3Φ-60HZ	MS	1½	
EF-4	BREIDERT LO-SET SIZE 12	ROOF	BATTERIES RM. EXH.	840	1,020	12	¼	3,274	BI	1/6		115V-1Φ-60HZ	NEOPRENE PAD	—	EXPLOSION PROOF ACID RESISTANCE COATING
EF-5	HARVEY INDUSTRIES 122-H UTILITY	INSPECTION & LUBRICATION	PITS EXHAUST	2,430	1,750	12¼	3	1,735	BI	2		460V-3Φ-60HZ	MS	1½	
EF-6	BREIDERT LO-SET SIZE 15	ROOF	WELDING ROOM	1,190	1,015	15	¾	4,760	BI	¼		115V-1Φ-60HZ	NEOPRENE PAD	—	EXPLOSION PROOF ACID RESISTANCE COATING
EF-7	EXITAIRE G-3007	ROOF	AIR COMP. RM.	4,300	355	30	¼	2,840	BI	½	1,750	460V-3Φ-60HZ	↓	—	

RELIEF VENTILATOR

NO.	TYPE & MODEL NO.	LOCATION	SERVICE	CFM	ROOF OPENING SIZE	S.P. (IN)	REMARKS
RV-1	EXITAIRE RS 30	ROOF	STEAM CLEAN	4,600	30"x30"	.062	WITH BACKDRAFT DAMPER
RV-2	EXITAIRE RS 18	ROOF	TIRES	1,420	18"x18"	.062	
RV-3	EXITAIRE RS 24	ROOF	INSPECTION/ LUBRICATION PITS	2,840	24"x24"	.062	
RV-4 RV-5	EXITAIRE RS 24	ROOF	SERVICE BAYS	3,550	24"x24"	.093	

VAV & CV SCHEDULE

NO.	SIZE	LOCATION	MAX. CFM *	REMARKS
1	VV-5	RM. 110(W)	100	
2	VV-8	110	300	
3	VV-8	111	310	
4	VV-5	110	150	
5	VV-10	202	860	
6	VV-10	203	870	
7	VV-10	204	760	
8	VV-10	206	690	
9	VV-8	207 (N)	290	
10	VV-12	207 (S)	1140**	
11	VV-8	207 (S)	310	
12	VV-8	221 (N)	350	
13	VV-6	224	180	
14	VV-10	224	640**	
15	VV-8	221 (N)	320	
16	VV-10	↓ 221	500	
17	VV-12	RM. 224	930	
18	CV-5	RM. 106	140	
19	CV-6	207	220	
20	CV-8	207	320	
21	CV-6	207	210	
22	CV-6	207 (S)	160	
23	CV-6	207 (N)	160	
24	CV-6	221 (N)	160	
25	CV-5	224	100	
26	CV-5	↓ 221 (N)	130	
27	CV-8	RM. 224	400	

* MIN CFM ARE 40% OF MAX. CFM.
** MIN CFM ARE 0.

VOLUME REGULATORS (MITCO)

NO.	MODEL NO.	CFM RANGE	MIN. S.P. IN H_2O	CONN. SIZE INCH.	MAX. NC IN DB	REMARKS
VV-5	101-VV5	50-150	0.4	5"Φ	20	
VV-6	101-VV6	155-250		6"Φ	20	
VV-8	101-VV8	255-400		8"Φ	20	
VV-10	101-VV10	405-900		10"Φ	30	
VV-12	101-VV12	905-1400		12"Φ	30	
CV-5	101-CV5	50-150		5"Φ	20	
CV-6	101-CV6	155-250		6"Φ	20	
CV-8	101-CV8	255-400	↓	8"Φ	20	
CV-10	101-CV10	405-900	0.4	10"Φ	30	

UNIT HEATERS (PERFECTION)

NO.	TYPE & MODEL NO.	SERVICE	FUEL	INPUT BTU/HR.	REMARKS
UH-1	INFRA-RED, JK22	UPHOLSTERY	NATURAL GAS	22,000	120V IGNITION SEE ELEC. DWGS FOR SW.
UH-2 UH-3	JK22	STORAGE 109		22,000	
UH-4	JK22	ENGINE REBUILD & INJECTOR		22,000	
UH-5	JK22	TRANSMISSION		22,000	
UH-6 THRU-15	JK22	SERVICE BAYS		22,000	
UH-16 UH-17	JK50	TIRES & REPAIR		22,000	
UH-18 UH-19	JK75	INSPECT & LUBE		75,000	
UH-20	INFRA-RED JK22	A/C REPAIR	NATURAL GAS	22,000	

AIR DRYER

NO.	TYPE & MODEL NO.	LOCATION	SERVICE	SCFM	NO. OF STAGE	OPER. PRESS. PSI	MOTOR HP	MOTOR RPM	MOTOR VOLTAGE	REMARKS
AD-1	HONEYWELL AK 3488	AIR COMP. RM.	CONTROL	0.4	1	20	1/6	1,750	115V-1Φ-60HZ	

NOTE

1. ACID RESISTANCE DUCT WORK.
   PART WASH HOOD EXHAUST SYSTEM.
   BATTERY ROOM EXHAUST SYSTEM.

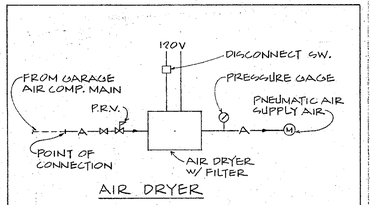

AIR DRYER

CONTROL SEQUENCE

A. ROOF TOP UNITS (RTU-1 AND RTY-2):

1. ROOFTOP UNITS SHALL BE STARTED AND STOPPED BY AN INDIVIDUAL TIME CLOCK WHICH IS LOCATED IN ROOM 219.
2. SMOKE DETECTOR LOCATED DOWN STREAM OF AIR FILTER SHALL STOP THE SUPPLY FAN.

B. UNIT RTU-1 WITH FACTORY PACKAGED CONTROLS:

1. ECONOMIZER CONTROL: OUTSIDE AIR DAMPER SHALL OPEN AND RETURN AIR DAMPER SHALL CLOSE WHEN OUTDOOR AIR ENTAHLPY IS BELOW SETTING OF ENTAHLPY CONTROLLER.
2. COOLING CONTROL: PACKAGED CONTROL SHALL MAINTAIN SUPPLY AIR TEMPERATURE OF 56°F D.B.
3. WARM UP CYCLE CONTROL: COMPRESSOR AND OUTSIDE AIR DAMPER SHALL BE CLOSED UNTIL RA TEMPERATURE RISES TO 65°F D.B.
4. STATIC PRESSURE CONTROL: A STATIC PRESSURE CONTROLLER WITH SENSOR AT END OF MAIN SUPPLY DUCT INDICATED ON FLOOR PLAN SHALL MODULATE DAMPER ON SUPPLY AIR FAN TO MAINTAIN ITS SETTING.

C. UNIT RTU-2 WITH FACTORY PACKAGED CONTROLS.

1. HEATING AND COOLING COMPONENTS SHALL BE CONTROLLED BY A TEMPERATURE SENSOR IN THE SUPPLY AIR TO MAINTAIN VARYING SUPPLY AIR TEMPERATURE AS RESET BY THE OUTSIDE AIR TEMPERATURE.
2. THE TEMPERATURE RESET SCHEDULE SHALL BE AS FOLLOWS:

OUTSIDE AIR	SUPPLY AIR
36°F	110°F
61°F	78°F
62°F to 77°F	LOCKOUT HEATING AND COOLING EQUIPMENT
ABOVE 78°F	58°F

D. VARIABLE AIR VOLUME CONTROLLERS: ROOM THERMOSTAT SHALL MODULATE THE SUPPLY AIR VOLUME TO MAINTAIN A SET ROOM TEMPERATURE OF 78°F.

E. EXHAUST FAN EF-1 (TOILET ROOM EXHAUST): FAN SHALL BE STARTED BY TIME CLOCK.

F. EXHAUST FANS EF-2 THROUGH EF-6: FANS SHALL BE OPERATED MANUALLY.

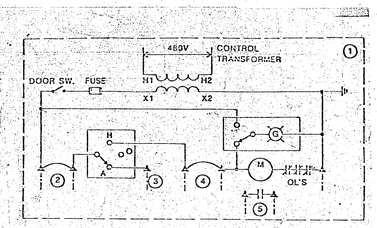

1. MOTOR STARTER FOR CONTROL OF 480 VOLT MOTOR, WITH CONTROL TRANSFORMER, HAND-OFF-AUTO SWITCH, PUSH TO TEST TRANSFORMER TYPE PILOT LIGHT AND TERMINALS FOR CONTROL WIRING.
2. REMOVE JUMPER TO CONNECT SAFETY OR DISCONNECT DEVICE.
3. WIRING TO CONTROL DEVICE.
4. REMOVE JUMPER FOR EP/PE CONTROL (SEE TABLE)
5. INTERLOCK OR STATUS WIRING.
6. ——— WIRING UNDER MECHANICAL SECTION.

MOTOR CONTROL - 480 VOLT MOTOR
(SEE ELECTRICAL SECTION)

CONTROL DIAGRAM

WIRING TO CONTROL DEVICE UNDER MECHANICAL SECTION	
ITEM	TERMINAL 3
EF-1	TIME CLOCK

AIR CONDITIONING LEGEND

SYMBOL DOUBLE LINE	SYMBOL SINGLE LINE	ABBREV.	DESCRIPTION
			SUPPLY AIR DUCT
	R		RETURN AIR DUCT
	E		EXHAUST AIR DUCT
	OA		OUTSIDE AIR DUCT
			TRANSITION
			ELBOW W/ TURNING VANES
			SUPPLY AIR DUCT
			RETURN, EXHAUST OR OUTSIDE AIR DUCT
			STACK, VENT OR ROUND DUCT
			FLEXIBLE DUCT
	(L)		LINED DUCT
R	R		RISE IN DIRECTION OF AIR FLOW
D	D		DROP IN DIRECTION OF AIR FLOW
T=6	T=6		SPLIT Y BRANCH
			TAP-IN OR CONICAL BRANCH
			45° LATERAL BRANCH
		MD	MOTORIZED DAMPER
		VD	MANUAL VOLUME DAMPER
		BD	BACKDRAFT DAMPER
		FD	FIRE DAMPER
		12"x12-500	12"x12" NECK CEILING DIFFUSER, 500 CFM ARROWS INDICATE THROW PATTERN
		12"x12-500 12"x12G	12"x12" CEILING REGISTER, 500 CFM 12"x12" CEILING GRILLE
		12"x12-500	12"x12" SUPPLY REGISTER, 500 CFM
		12"x12-500 12"x12G	12"x12" REGISTER. 500 CFM 12"x12" GRILLE
		12"Φ-400	12"Φ NECK CEILING DIFFUSER, 400 CFM
			FLEXIBLE CONNECTION
T			THERMOSTAT
H			HUMIDISTAT
		AD	ACCESS DOOR
		AP	ACCESS PANEL
U/C			UNDERCUT DOOR 1"
D/L			DOOR LOUVER
		OA	OUTSIDE AIR
		RA	RETURN AIR
		MH	BOTTOM OF MOUNTING HEIGHT
		BI	BACKWARD INCLINED
		FC	FORWARD CURVE
		FLA	FULL LOAD AMPS
		RLA	RATED LOAD AMPS
		LRA	LOCKED ROTOR AMPS
		MCA	MINIMUM CIRCUIT AMPS
		MOCP	MAXIMUM OVERCURRENT PROTECTION
		VAV	VARIABLE AIR VOLUME
		CV	CONSTANT AIR VOLUME
SD			SMOKE DETECTOR
		SS	STAINLESS STEEL (316)

NOTE: GARAGE DOORS SHALL REMAIN OPEN DURING WORKING HOURS FOR VENTILATION

STATEMENT OF DESIGN COMPLIANCE

Divisions FIVE & SIX of the California Energy Conservation Standards for non-residential buildings in Title 24 of the California Administrative Code have been reviewed and the design described herein is in substantial conformance.

ENGINEER	CERT. NO.	DATE
	M10826	9-2-83

REGISTERED PROFESSIONAL ENGINEER MASAO G. HAYAKAWA No. M 10826 MECHANICAL STATE OF CALIFORNIA

HAYAKAWA ASSOCIATES
CONSULTING ENGINEERS
PHONE (213) 879-4477
1180 SO. BEVERLY DR., LOS ANGELES, CALIF. 90035

HUGH GIBBS & DONALD GIBBS
Architects F.A.I.A.
3575 Long Beach Boulevard, Long Beach, California

DRAWN TD, RK	DATE 12-16-83
CHECKED	JOB 1791

TORRANCE TRANSIT FACILITY

TORRANCE
CALIFORNIA

FEDERAL PROJECT NO. CA-03-0208-01

SCHEDULES, LEGEND AND CONTROL DIAGRAM

SHEET M-1

DIETERICH-POST CLEARPRINT 1020

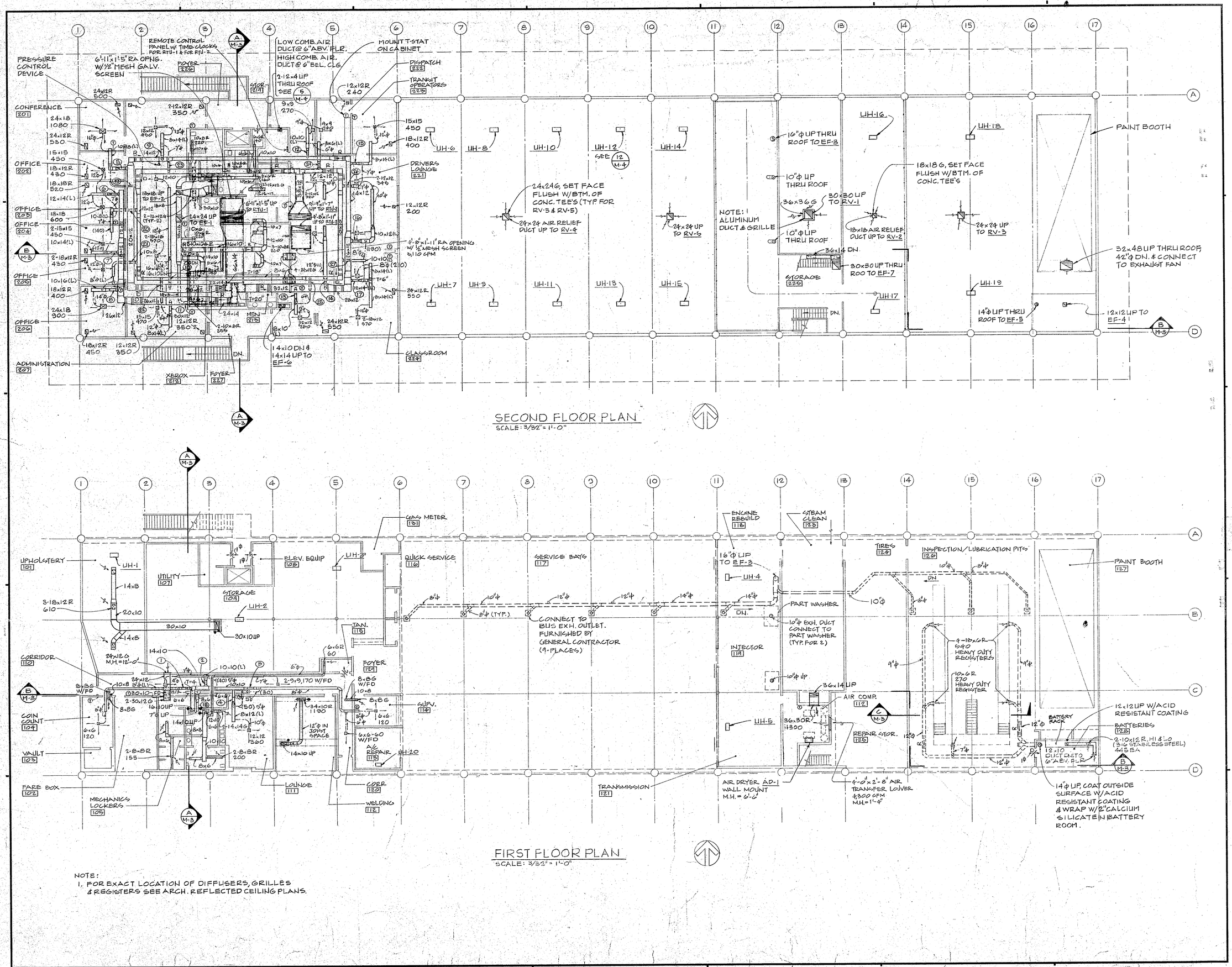

SECOND FLOOR PLAN
SCALE: 3/32" = 1'-0"

FIRST FLOOR PLAN
SCALE: 3/32" = 1'-0"

NOTE:
1. FOR EXACT LOCATION OF DIFFUSERS, GRILLES & REGISTERS SEE ARCH. REFLECTED CEILING PLANS.

HAYAKAWA ASSOCIATES
CONSULTING ENGINEERS
PHONE (213) 879-4477
1180 S. BEVERLY DR. LOS ANGELES, CALIF. 90035
REGISTERED PROFESSIONAL ENGINEER
TETSU G. HAYAKAWA
No. M 15826
MECHANICAL
STATE OF CALIFORNIA

HUGH GIBBS & DONALD GIBBS
Architects F.A.I.A.
3575 Long Beach Boulevard, Long Beach, California

DRAWN	DATE
T.P. R.K	12-16-83
CHECKED	JOB
	1791

TORRANCE TRANSIT FACILITY

TORRANCE
CALIFORNIA

FEDERAL PROJECT NO.
CA-03-0208-01

FIRST AND SECOND FLOOR PLANS

SHEET
M-2

DIETERICH-POST CLEARPRINT 1020

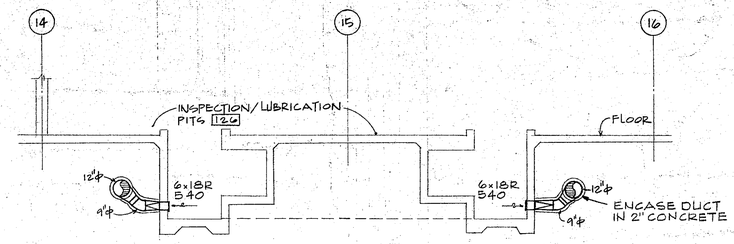

SECTION C M-3
SCALE: 1/4"=1'-0"

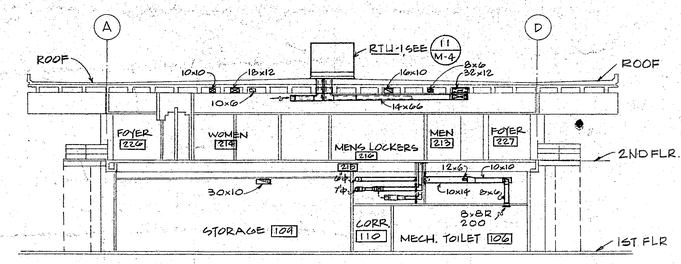

SECTION A M-3
SCALE: 3/32"=1'-0"

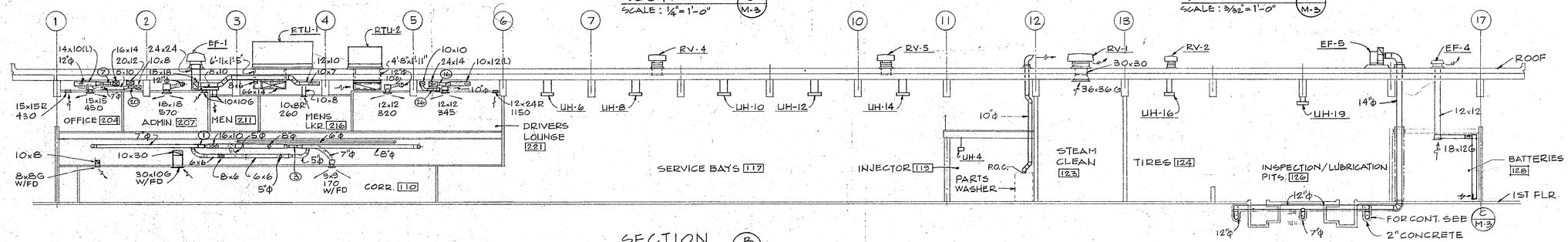

SECTION B M-3
SCALE: 3/32"=1'-0"

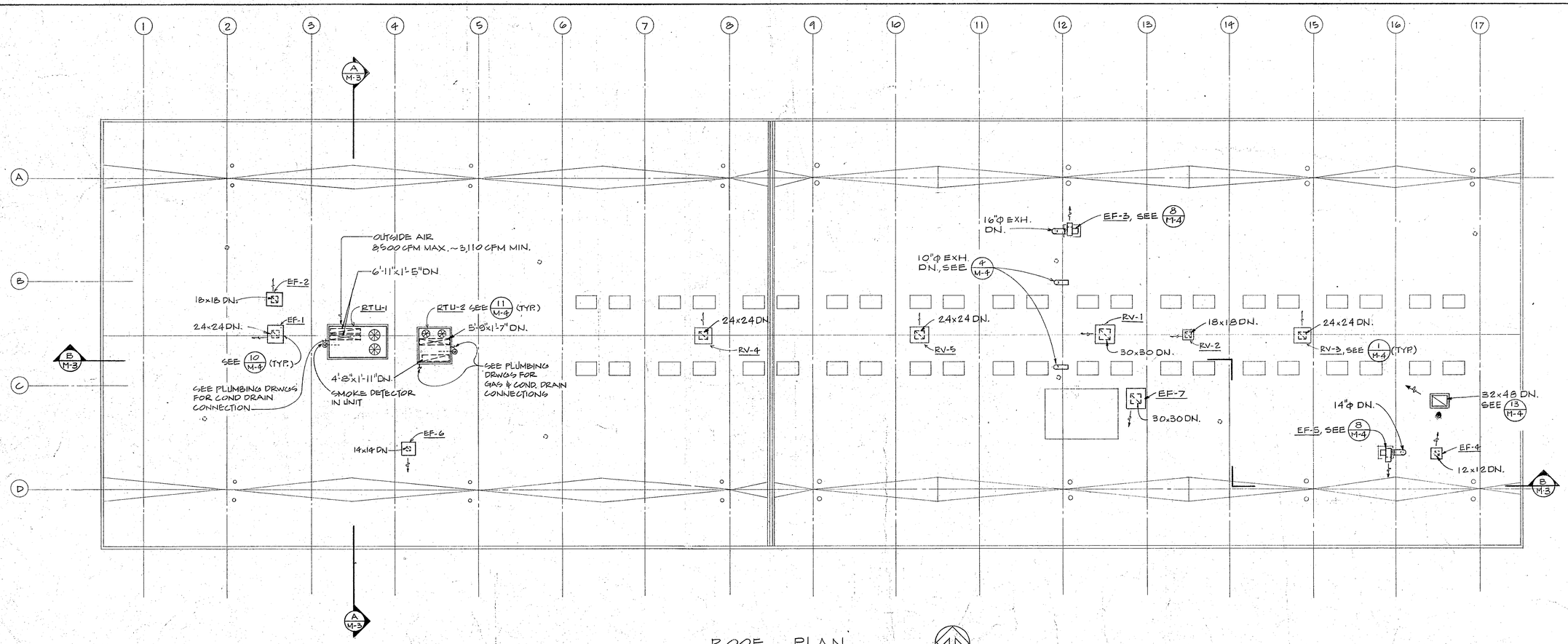

ROOF PLAN
SCALE: 3/32"=1'-0"

HAYAKAWA ASSOCIATES
CONSULTING ENGINEERS
PHONE (213) 879-4477
1180 SO. BEVERLY DR., LOS ANGELES, CALIF. 90035

HUGH GIBBS & DONALD GIBBS
Architects F.A.I.A.
3575 Long Beach Boulevard, Long Beach, California

DRAWN RK, TD	DATE 12-16-83
CHECKED	JOB 1791

TORRANCE TRANSIT FACILITY

TORRANCE
CALIFORNIA

FEDERAL PROJECT NO.
CA-03-0208-01

ROOF PLAN AND SECTIONS

SHEET M-3

DIETERICH-POST CLEARPRINT 1020

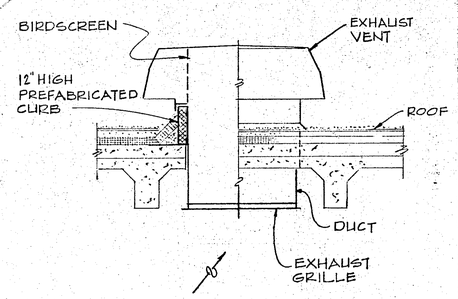

RELIEF VENTILATOR (1 / M-4)
NOT TO SCALE

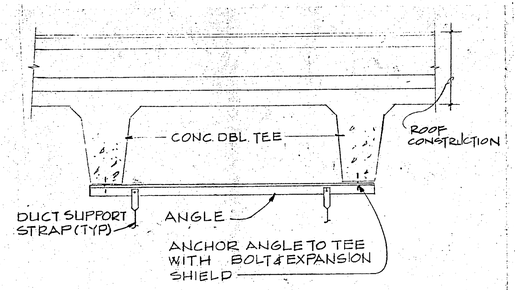

DUCT SUPPORT DETAIL (2ND FLOOR) (2 / M-4)
NOT TO SCALE

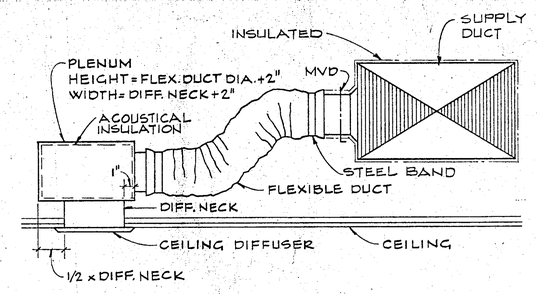

CEILING DIFFUSER CONNECTION (3 / M-4)
NOT TO SCALE

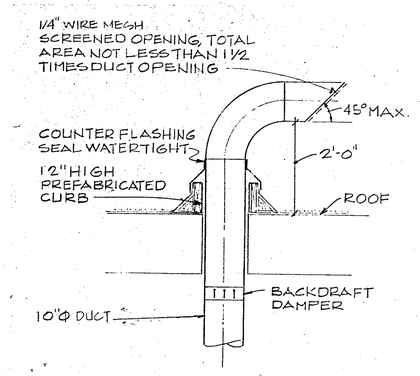

PART WASHER VENT (4 / M-4)
NOT TO SCALE

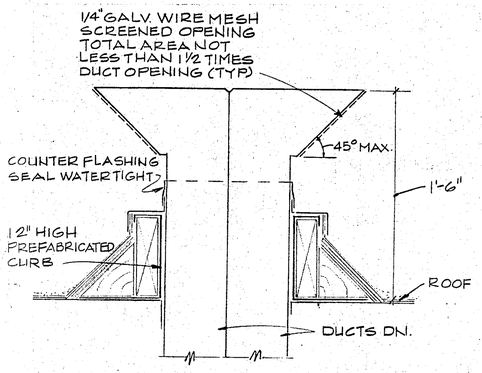

COMBUSTION AIR CAP (5 / M-4)
NOT TO SCALE

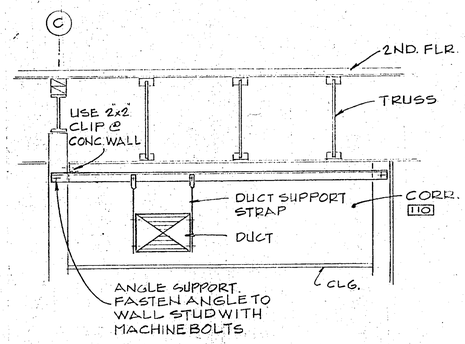

DUCT SUPPORT DETAIL (1ST FLOOR) (6 / M-4)
NOT TO SCALE

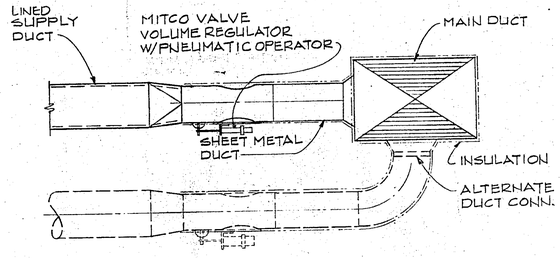

VOLUME REGULATOR (7 / M-4)
NOT TO SCALE

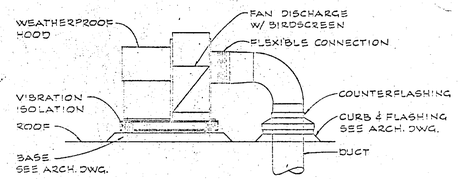

NOTE: BOTTOM HORIZONTAL DISCHARGE SHOWN. FOR OTHER DISCHARGE ARRANGEMENTS INSTALL DRAIN COUPLING AT THE BOTTOM OF THE SCROLL.

EXHAUST FAN SUPPORT (8 / M-4)
NOT TO SCALE

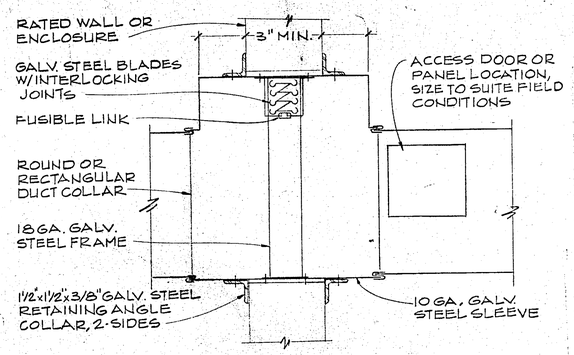

NOTE: DAMPER MUST HAVE 100% FREE DUCT AREA.

FIRE DAMPER DETAIL (9 / M-4)
NOT TO SCALE

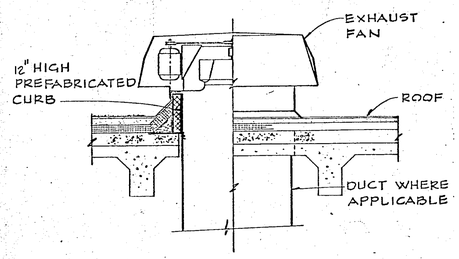

EXHAUST FAN (ON ROOF) (10 / M-4)
NOT TO SCALE

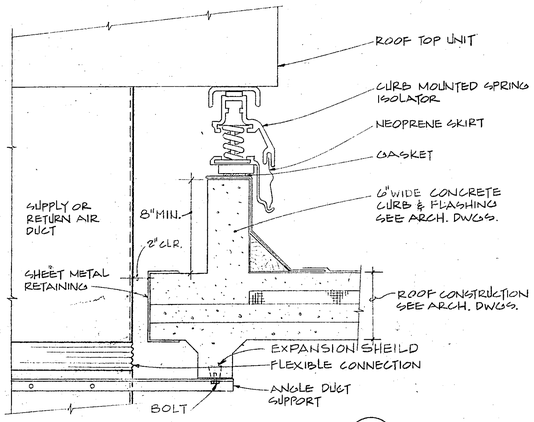

ROOF CURB (11 / M-4)
NOT TO SCALE

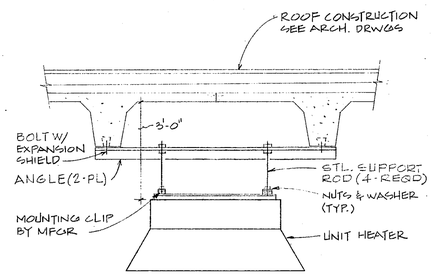

UNIT HEATER (12 / M-4)
NOT TO SCALE

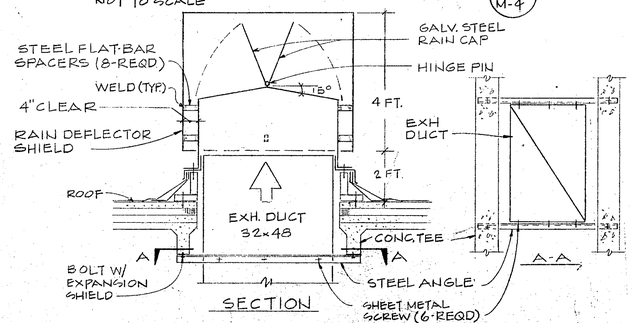

PAINT SPRAY BOOTH EXH. STACK (13 / M-4)
NOT TO SCALE

HAYAKAWA ASSOCIATES
CONSULTING ENGINEERS
PHONE (213) 879-4477
1180 SO. BEVERLY DR., LOS ANGELES, CALIF. 90035
REGISTERED PROFESSIONAL ENGINEER
STANLEY G. HAYAKAWA
No. M 10655
MECHANICAL
STATE OF CALIFORNIA

HUGH GIBBS & DONALD GIBBS
Architects F.A.I.A.
3575 Long Beach Boulevard, Long Beach, California

DRAWN R.K., TD	DATE 12-16-83
CHECKED	JOB 1791

TORRANCE TRANSIT FACILITY

TORRANCE
CALIFORNIA

FEDERAL PROJECT NO.
CA-03-0208-01

DETAILS

SHEET M-4

DIETERICH-POST CLEARPRINT 1020

ROUGH - IN SCHEDULE

SYMBOL	DESCRIPTION	SERVICES	REMARKS
3	SERVICE REELS	1/2" ATF, 1/2" GO, 1/2" MO, 1/2" CL 1/2" CW, 1/2" C & (2) 1/2" A. REELS	
3A	" "	1/2" A	
4	" "	1/2" A	
5	" "	1/2" A, 1/2" CW, 1/2" ATF, 1/2" MO, 1/2" C.	
6	" "	1/2" A	
6A	" "	1/2" A	
6G	" "	1/2" S	
7	PIT WASTE OIL DRAIN	2" WO	
8	PUMPS	ATF, SOLVENT, GEAR OIL MOTOR OIL & COOLANT	ONE EACH
8A	PUMP	CHASSIS LUBE	MOUNTED ON BARREL
10	STEAM CLEANER/HIGH PRESS. WASH.	2" G, 10" ϕ FLUE VENT	
11	AIR COMPRESSOR		
11A	AIR COMPRESSOR TANKS		
11B	AIR DRYER W/ AFTER COOLER		
12	SOLVENT STORAGE TANK		550 GAL.
13	A.T.F. " "		1000 GAL.
14	GEAR OIL " "		550 GAL.
15	MOTOR OIL " "		1000 GAL.
16	COOLANT " "		550 GAL.
17	WASTE OIL " "		2,000 GAL
21	DIESEL FUEL STORAGE TANKS		20,000 GAL
22	FUEL DISPENSERS		
9	WASTE OIL DRAIN	2" WO	

PLUMBING FIXTURE SCHEDULE

SYMBOL	DESCRIPTION	CONNECTION SIZE W	V	CW	HW	REMARKS
WC-1	WATER CLOSET	4"	2"	1"	—	FLR. MOUNT. F.V.
WC-2	WATER CLOSET	4"	2"	1"	—	" " " (HANDICAPPED)
U-1	URINAL	3"	2"	1"	—	WALL HUNG F.V.
U-2	URINAL	3"	2"	1"	—	" " " (HANDICAPPED)
L-1	LAVATORY	2"	1 1/2"	1/2"	1/2"	
S-1	SINK	2"	1 1/2"	1/2"	1/2"	SINGLE COMPARTMENT
S-2	SINK	2"	1 1/2"	1/2"	1/2"	DOUBLE COMPARTMENT
SH-1	SHOWER	2"	1 1/2"	1/2"	1/2"	HANDICAPPED HEIGHT
ES-1	EMERGENCY SHOWER	—	—	1 1/4"	—	
SS-1	SERVICE SINK	3"	2"	1/2"	1/2"	
E.W.C-1	ELECT. WATER COOLER	2"	1 1/2"	1/2"	—	
HB-1	HOSE BIBB	—	—	3/4"	—	W/VACUUM BREAKER
HB-2	HOSE BIBB	—	—	3/4"	—	" " "
WF-1	WASH FOUNTAIN	2"	1 1/2"	1"	1"	
FS-1	FLOOR SINK	—	—	—	—	SEE PLANS FOR SIZES
FD-1	FLOOR DRAIN	—	—	—	—	" " " "
FD-2	FLOOR DRAIN	—	—	—	—	" " " "
AD-1	AREA DRAIN	—	—	—	—	" " " "
RD-1	ROOF DRAIN	—	—	—	—	" " " "
ORD-1	OVERFLOW ROOF DRAIN	—	—	—	—	" " " "
TD-1	TRENCH DRAIN	4"	—	—	—	

PLUMBING LEGEND

SYMBOL	ABBREV	DESCRIPTION
	S.P. OR W.P	SOIL OR WASTE PIPE ABOVE GRADE
	SP OR W.P	" " " " BELOW "
S.D.	S.D.	STORM DRAIN ABOVE GRADE
S.D.	S.D.	" " BELOW "
	C.W.	COLD WATER
	H.W.	HOT WATER
	H.W.R	HOT WATER RETURN
D.	D.	INDIRECT DRAIN
F.	F.	FIRE SPRINKLER LINE
A	A.	COMPRESSED AIR
G.O.	G.O.	GEAR OIL
C.L.	C.L.	CHASSIS LUBE
M.O.	M.O.	MOTOR OIL
A.T.F.	A.T.F.	AUTOMATIC TRANSMISSION FLUID
W.O.	W.O.	WASTE OIL
D.F.	D.F.	DIESEL FUEL
	V.	VENT PIPE
G	G	FUEL GAS (NATURAL)
C	C	COOLANT
S	S	SOLVENT
CW & V	CW & V	COMBINATION WASTE & VENT
	G.V. OR S.O.V.	GATE VALVE OR "SHUT-OFF VALVE"
	C.V.	CHECK VALVE
	B.C.	BALANCING COCK
	OS&Y G.V.	OUTSIDE SCREW & YOKE GATE VALVE
	P.G.	PRESSURE GAUGE w/ PLUG COCK.
	TH.	THERMOMETER.
	P.C.	PLUG COCK
	R.V.	RELIEF VALVE
	U.	UNION
	FCO/COTG	FLOOR CLEANOUT /CLEANOUT TO GRADE
	CO/WCO	CLEANOUT / WALL CLEANOUT
	R.O.C	POINT OF CONNECTION
ICW	ICW	INDUSTRIAL COLD WATER
	FLR	FLOOR
	ABV	ABOVE
	BEL	BELOW
	IE	INVERT ELEVATION
	FIN FLR.	FINISH FLOOR
	ELEV/EL	ELEVATION
	VTR	VENT THRU ROOF
R	R	REGULAR GASOLINE
UL	UL	UNLEADED GASOLINE
VR	VR	VAPOR RECOVERY
	P.I.V.	POST INDICATOR VALVE
	RPBP	REDUCED PRESSURE BACKFLOW PREVENTOR

WATER HEATER SCHEDULE

SYMBOL	MANUFACTURE AND MODEL NUMBER	TYPE	BTUH INPUT	REHEAT CAPCITY	STORAGE	REMARKS
WH-1	PRESSURE VESSELS INC. PIV # 40 N250A-PG	GAS FIRED STORAGE TANK	400,000	540 GPH @ 70° RISE	250 GAL.	POWER VENTED, GLASHIELD LINING, ASME STAMPED 1/40 HP 115V, 60 HZ, 1DH MOTOR, MEET STATE OF CALIF ENERGY CODE

PUMP SCHEDULE

SYMBOL	MANUFACTURE AND MODEL NUMBER	SERVICE	GPM	TDH	MOTOR HP	RPM	V	PH	Hz	REMARKS
CP-1	BELL & GOSSETT SERIES 100 3/4" AA	DOMESTIC HOT WATER	5	8	1/12	1750	115	1	60	ALL BRONZE, TIME CLOCK CONTROLLED W/ AQUASTAT
SP-1	ENPO MODEL 150-A	WASHDOWN	40	20	1/2	1725	115	1	60	

STATEMENT OF DESIGN COMPLIANCE

Divisions ONE & SEVEN of the California Energy Conservation Standards for non-residential buildings in Title 24 of the California Administrative Code have been reviewed and the design described herein is in substantial conformance.

ENGINEER	CERT. NO.	DATE
Henry Hayakawa	M10826	10/26/83

HAYAKAWA ASSOCIATES
CONSULTING ENGINEERS
PHONE (213) 879-4477
1180 SO. BEVERLY DR., LOS ANGELES, CALIF. 90035

HUGH GIBBS & DONALD GIBBS
Architects F.A.I.A.
3575 Long Beach Boulevard, Long Beach, California

DRAWN CH	DATE 12-16-83
CHECKED	JOB 1791

TORRANCE TRANSIT FACILITY

TORRANCE
CALIFORNIA

FEDERAL PROJECT NO.
CA-03-0208-01

SCHEDULES & LEGENDS

SHEET P-1

DIETERICH-POST CLEARPRINT 1020

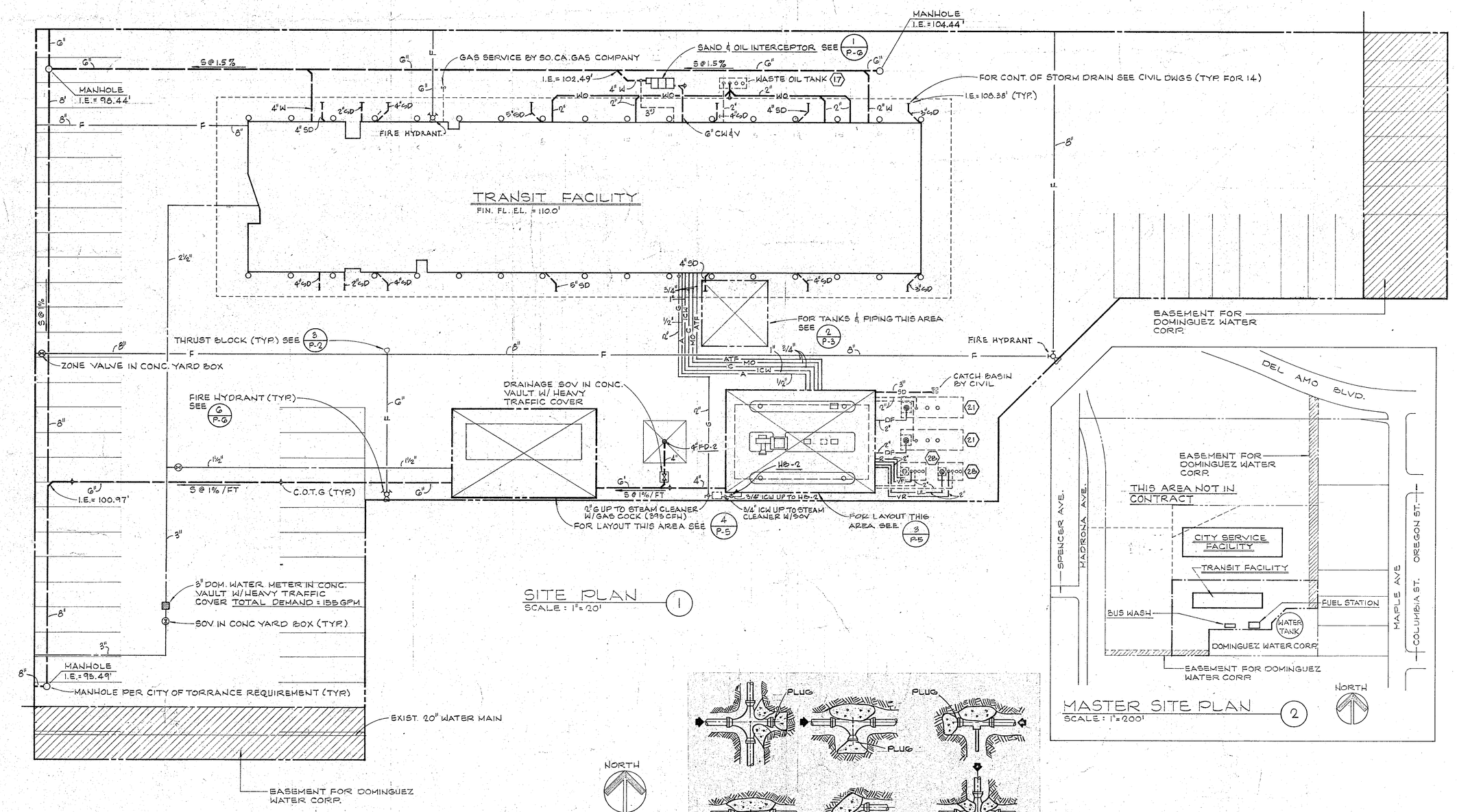

SITE PLAN (1)
SCALE: 1" = 20'

MASTER SITE PLAN (2)
SCALE: 1" = 200'

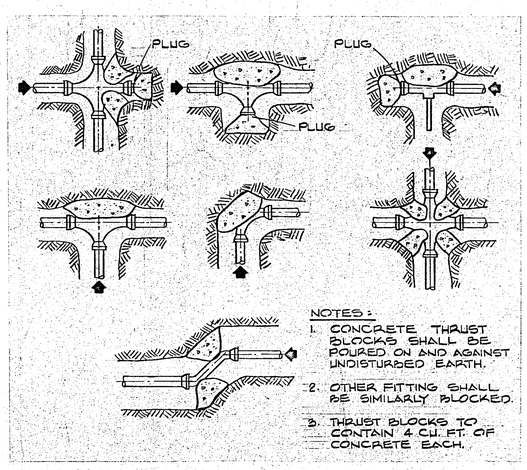

NOTES:
1. CONCRETE THRUST BLOCKS SHALL BE POURED ON AND AGAINST UNDISTURBED EARTH.
2. OTHER FITTING SHALL BE SIMILARLY BLOCKED.
3. THRUST BLOCKS TO CONTAIN 4 CU. FT. OF CONCRETE EACH.

THRUST BLOCK DETAIL (3)
NOT TO SCALE

HAYAKAWA ASSOCIATES
CONSULTING ENGINEERS
PHONE (213) 279-4477
1180 NO. BEVERLY DR. LOS ANGELES, CALIF. 90035
REGISTERED PROFESSIONAL ENGINEER
No. M 10526
MECHANICAL
STATE OF CALIFORNIA

HUGH GIBBS & DONALD GIBBS
Architects F.A.I.A.
3375 Long Beach Boulevard, Long Beach, California

DRAWN CH, RB	DATE 12-16-83
CHECKED	JOB 1791

TORRANCE TRANSIT FACILITY

TORRANCE
CALIFORNIA

FEDERAL PROJECT NO. CA-03-0206-01

SITE PLAN

SHEET P-2

DIETERICH-POST CLEARPRINT 1020

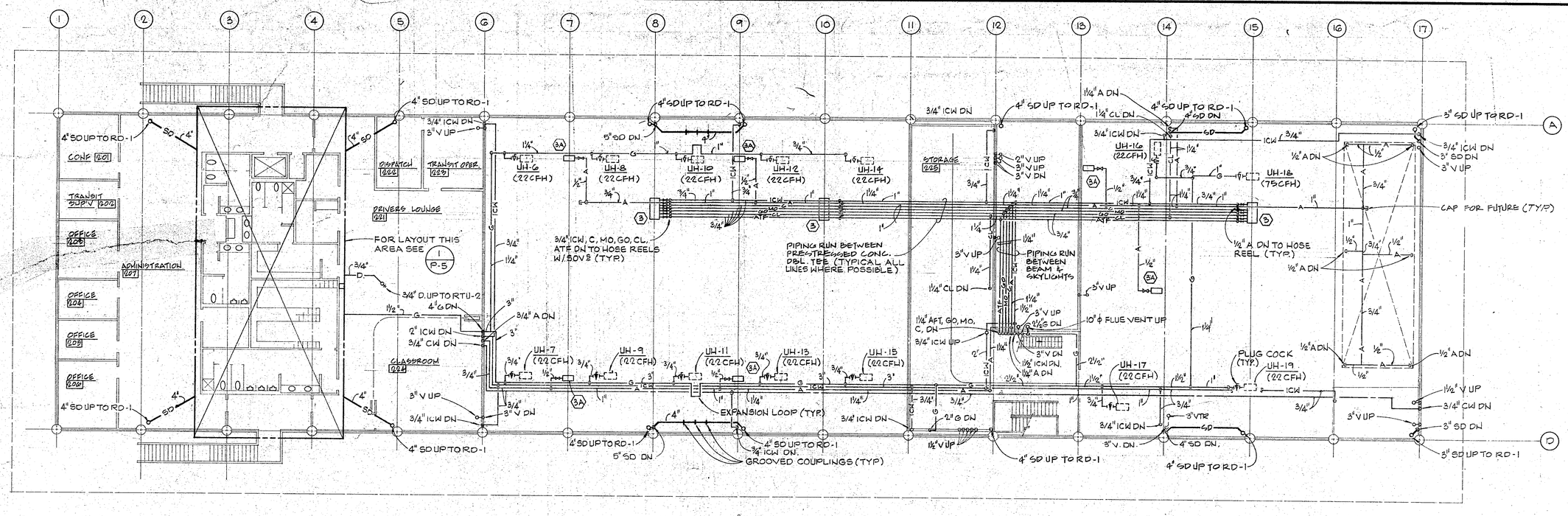

SECOND FLOOR PLAN (1)

SCALE: 3/32" = 1'-0"

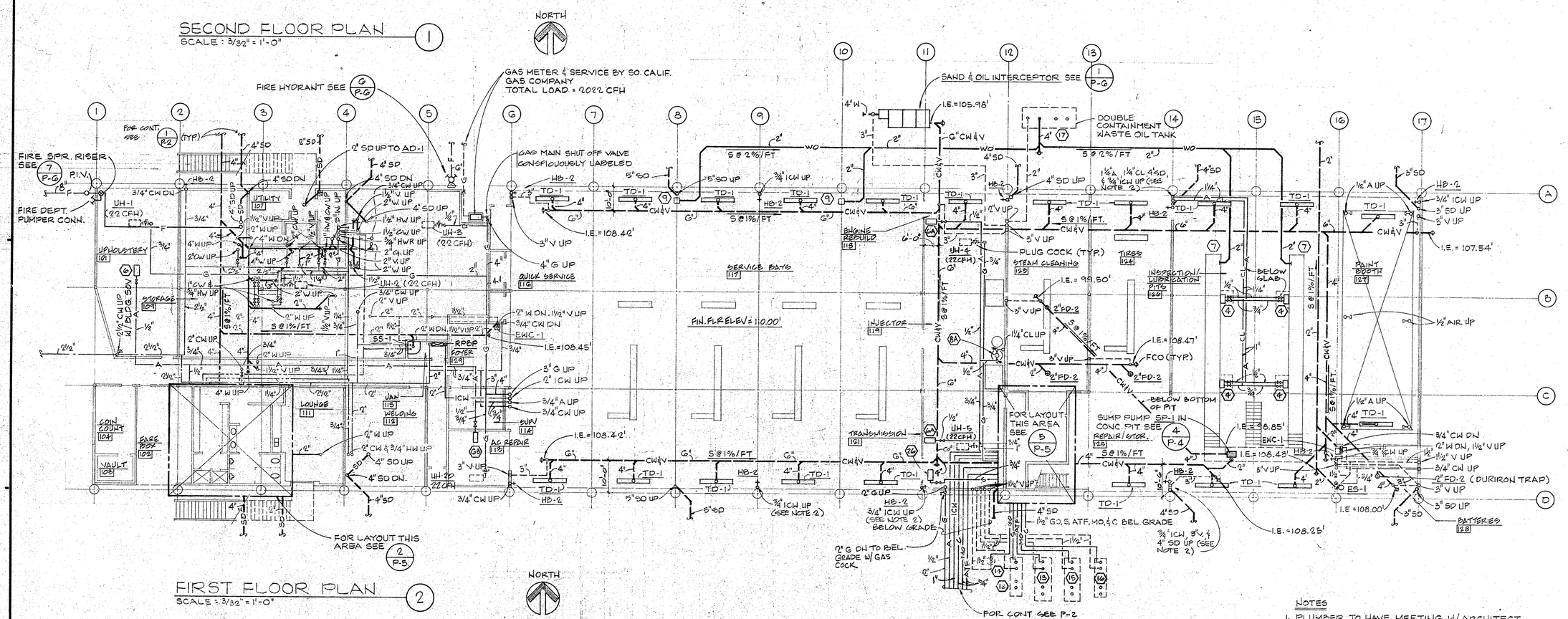

FIRST FLOOR PLAN (2)

SCALE: 3/32" = 1'-0"

NOTES

1. PLUMBER TO HAVE MEETING W/ ARCHITECT PRIOR TO RUNNING EXPOSED LINES
2. OFFSET PIPING DROPPING DN. FROM 2ND FLR. TO 1ST FLR AS NEEDED TO AVOID INTERFERENCE WITH ROLL UP DOORS OR STRUCTURAL MEMBERS

HAYAKAWA ASSOCIATES
CONSULTING ENGINEERS
PHONE (213) 879-1337
780 SO. BEVERLY DR. LOS ANGELES, CALIF. 90035

HUGH GIBBS & DONALD GIBBS
Architects F.A.I.A.
3575 Long Beach Boulevard, Long Beach, California

DRAWN	DATE
CH, RB	12-16-83
CHECKED	JOB 1791

TORRANCE TRANSIT FACILITY

TORRANCE CALIFORNIA

FEDERAL PROJECT NO. CA-03-0205-01

FIRST & SECOND FLOOR PLANS

SHEET P-3

DIETERICH-POST CLEARPRINT 1020

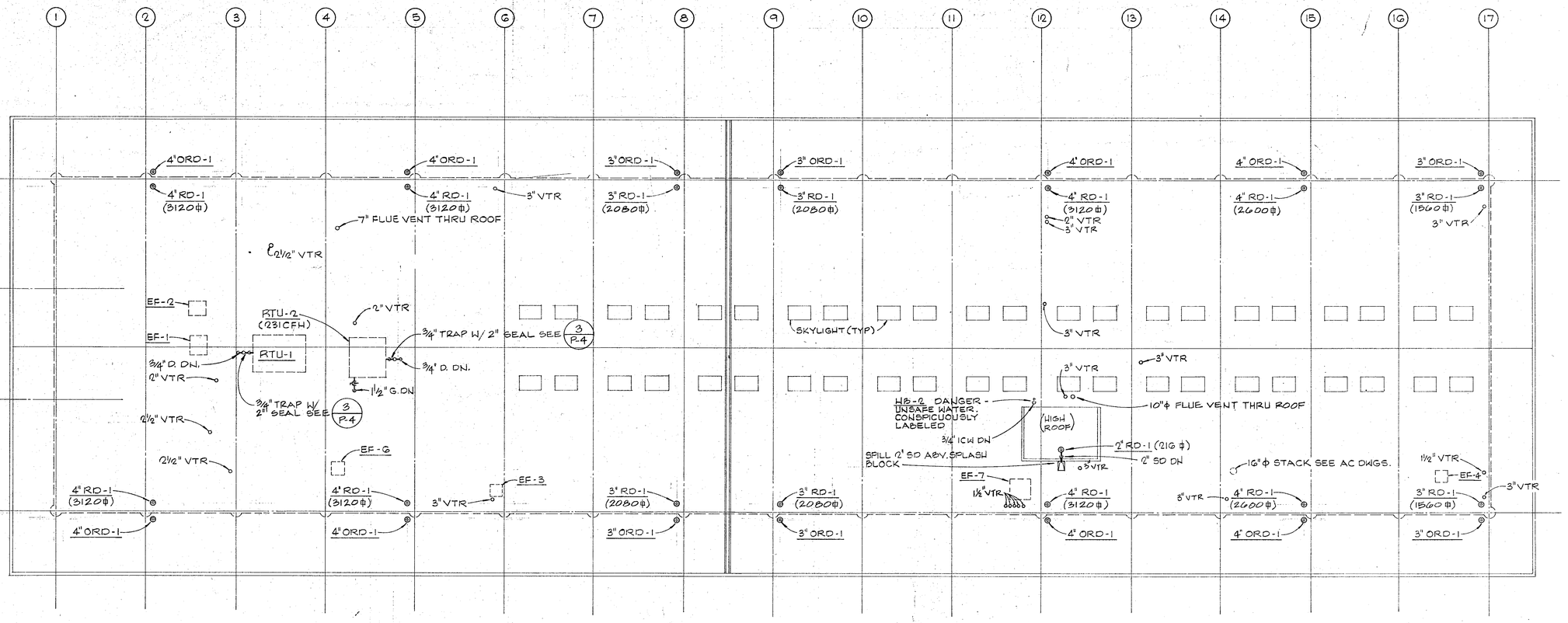

ROOF PLAN (1)
SCALE: 3/32" = 1'-0"

NORTH

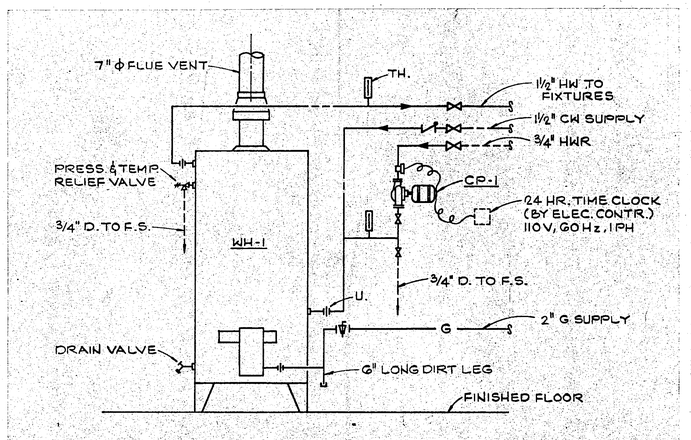

WATER HEATER DETAIL (2)
NOT TO SCALE

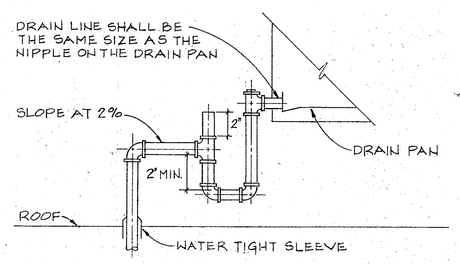

CONDENSATE DRAIN TRAP (3)
NOT TO SCALE

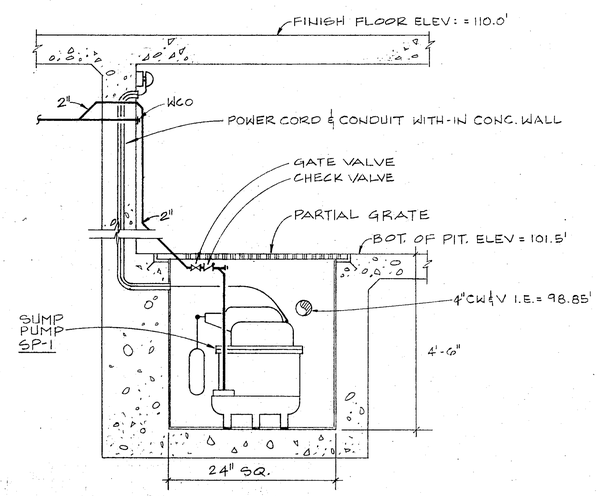

SUMP PUMP DETAIL (4)
NOT TO SCALE

HAYAKAWA ASSOCIATES
CONSULTING ENGINEERS
PHONE (213) 879-4477
1180 SO. BEVERLY DR., LOS ANGELES, CALIF. 90035

REGISTERED PROFESSIONAL ENGINEER
TATSUO G. HAYAKAWA
No. M 20826
MECHANICAL
STATE OF CALIFORNIA

HUGH GIBBS & DONALD GIBBS
Architects F.A.I.A.
3575 Long Beach Boulevard, Long Beach, California

DRAWN CH, RB	DATE 12-16-83
CHECKED	JOB 1791

TORRANCE TRANSIT FACILITY

TORRANCE CALIFORNIA

FEDERAL PROJECT No. CA-03-0208-01

ROOF PLAN & DETAILS

SHEET P-4

DIETERICH-POST CLEARPRINT 3020

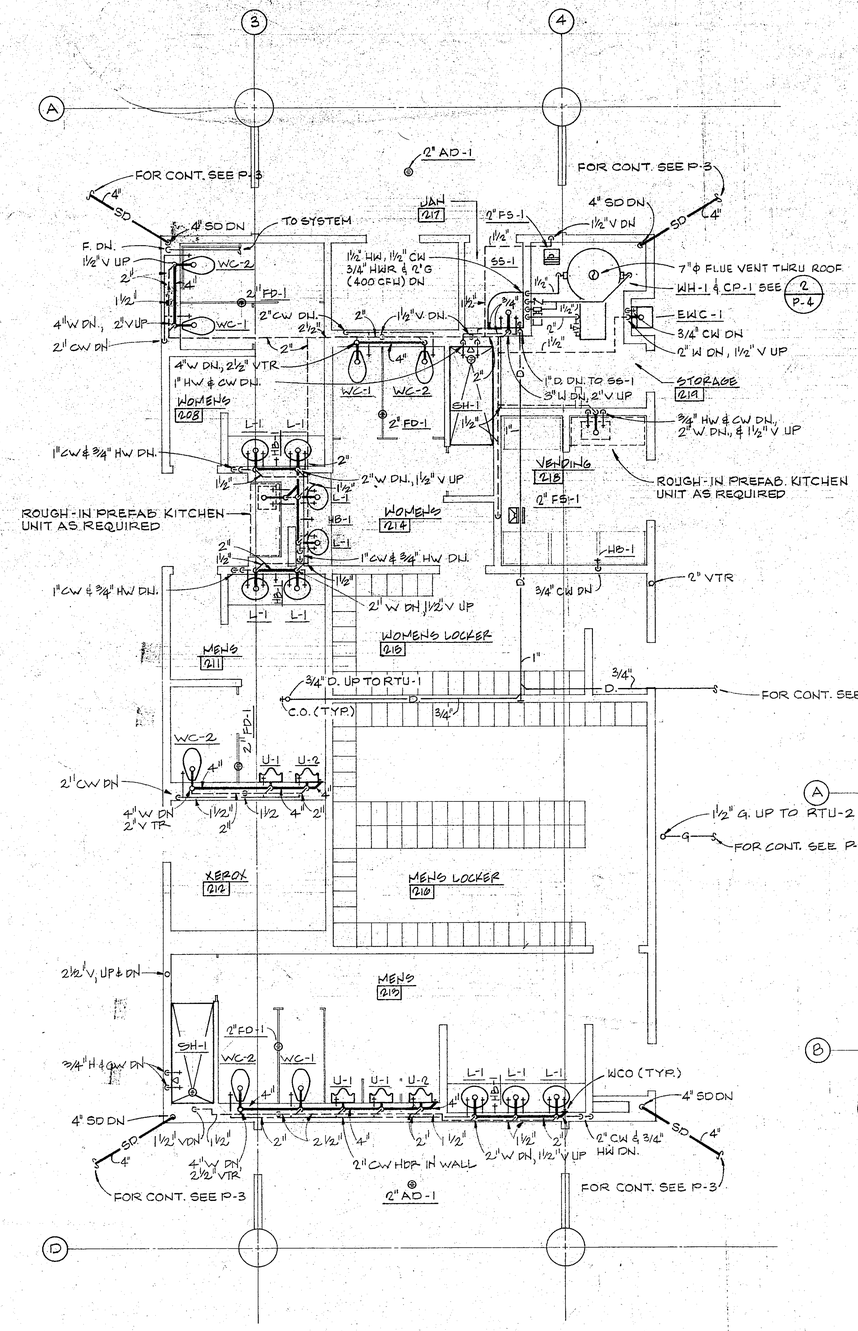

SECOND FLOOR TOILET ROOM PLAN (1)
SCALE: 1/4" = 1'-0"

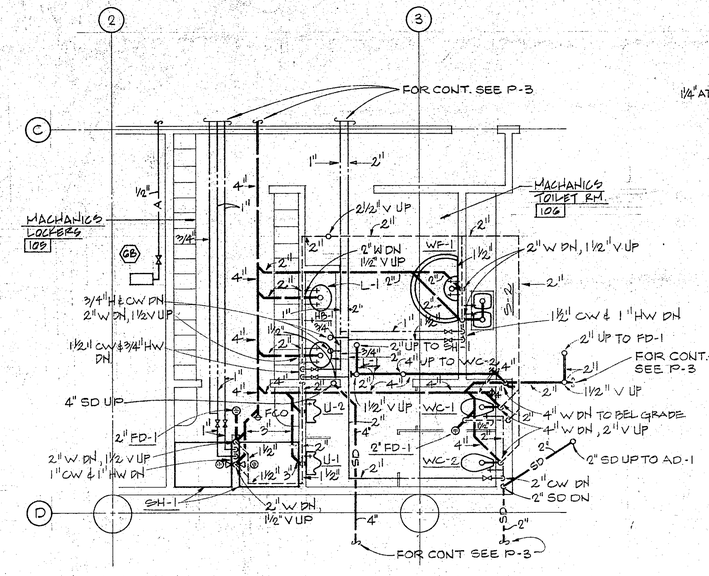

FIRST FLOOR TOILET ROOM PLAN (2)
SCALE: 1/4" = 1'-0"

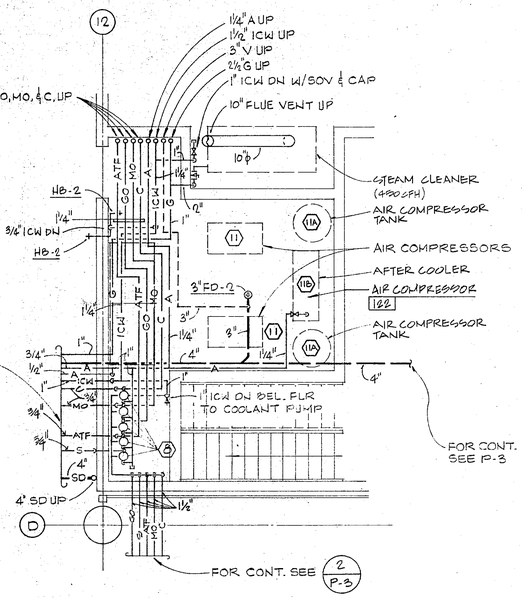

AIR COMPRESSOR ROOM (5)
SCALE: 1/4" = 1'-0"

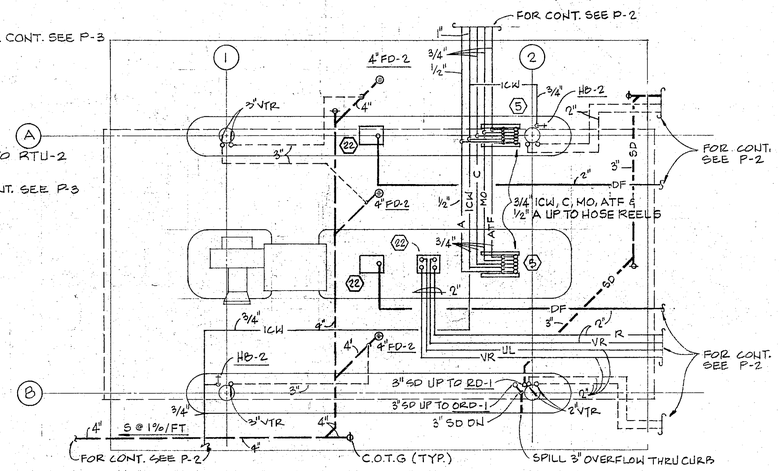

FUEL STATION PLAN (3)
SCALE: 1/8" = 1'-0"

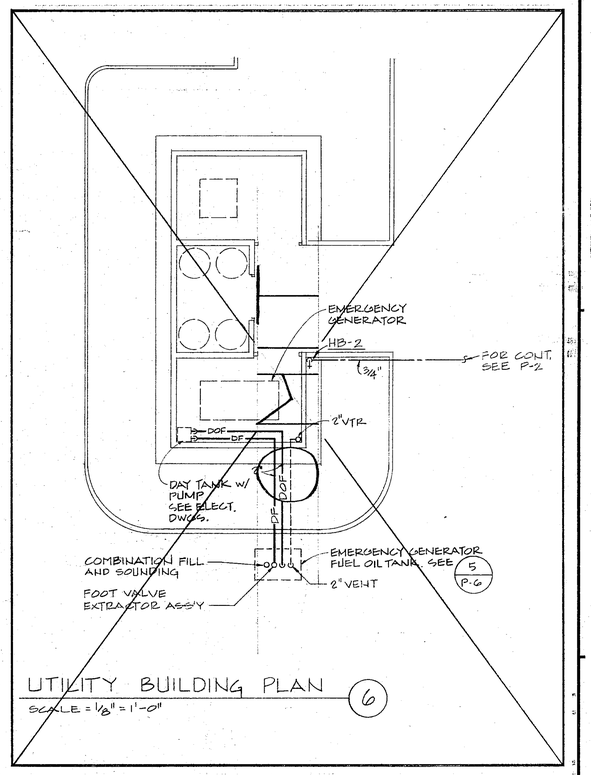

UTILITY BUILDING PLAN (6)
SCALE: 1/8" = 1'-0"

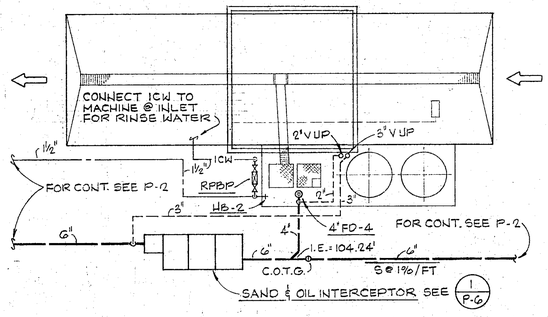

BUS WASH AREA (4)
NOT TO SCALE

HAYAKAWA ASSOCIATES
CONSULTING ENGINEERS
PHONE (213) 879-4377
1180 SOUTH BEVERLY DR. LOS ANGELES, CALIF., 90035

HUGH GIBBS & DONALD GIBBS
Architects F.A.I.A.
3375 Long Beach Boulevard, Long Beach, California

DRAWN CH, RB	DATE 12-16-83
CHECKED	JOB 1791

TORRANCE TRANSIT FACILITY

TORRANCE
CALIFORNIA

FEDERAL PROJECT NO. CA-03-0208-01

PARTIAL PLANS

SHEET P-5

DIETERICH-POST CLEARPRINT 1020

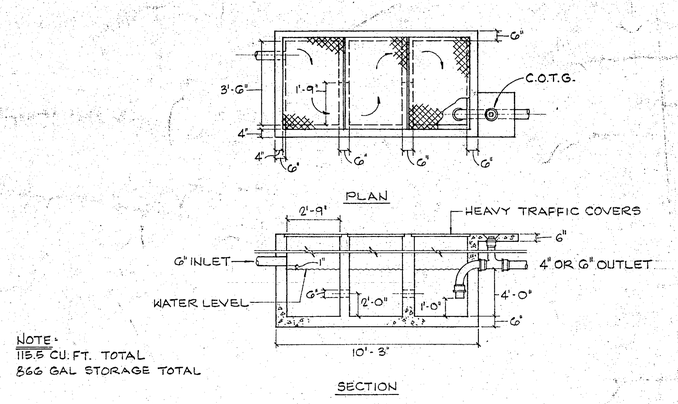

NOTE:
115.5 CU. FT. TOTAL
866 GAL STORAGE TOTAL

SAND AND OIL INTERCEPTOR (1)
NOT TO SCALE

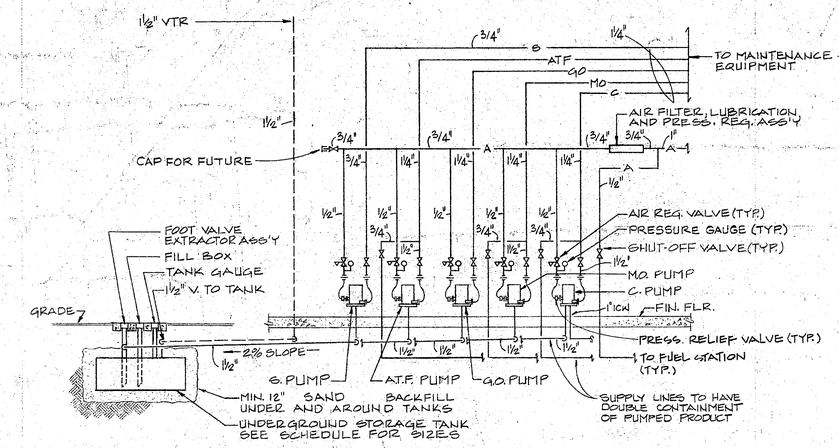

PUMPS IN AIR COMPRESSOR ROOM (2)
NOT TO SCALE

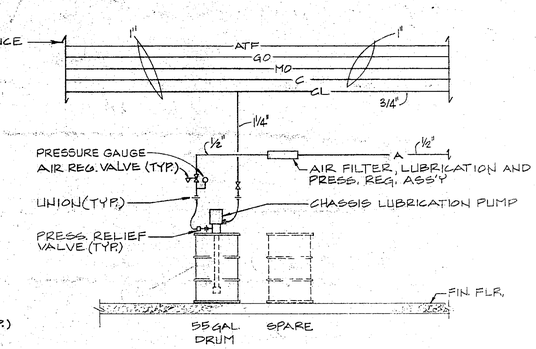

CHASSIS LUBRICATION PUMP (3)
NOT TO SCALE

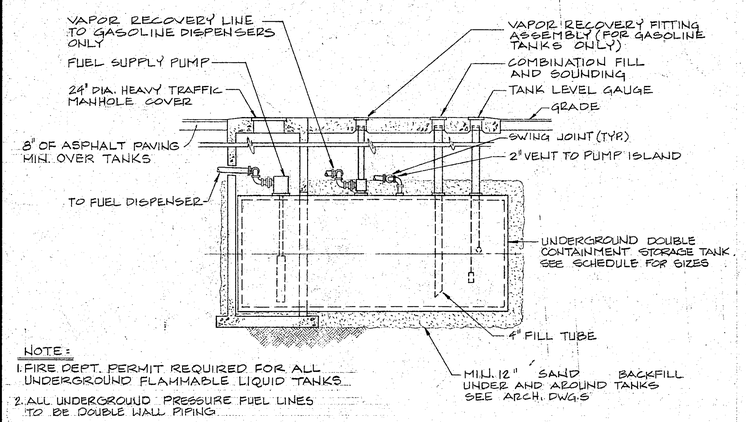

NOTE:
1. FIRE DEPT. PERMIT REQUIRED FOR ALL UNDERGROUND FLAMMABLE LIQUID TANKS.
2. ALL UNDERGROUND PRESSURE FUEL LINES TO BE DOUBLE WALL PIPING.

FUEL STORAGE TANK (4)
NOT TO SCALE

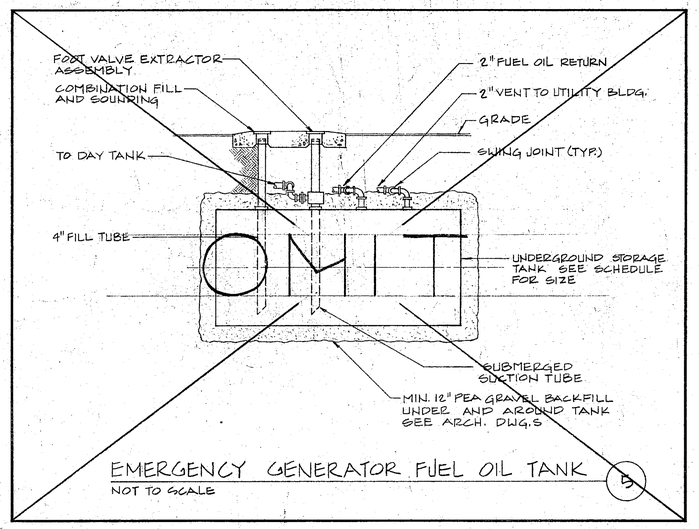

OMIT

EMERGENCY GENERATOR FUEL OIL TANK (5)
NOT TO SCALE

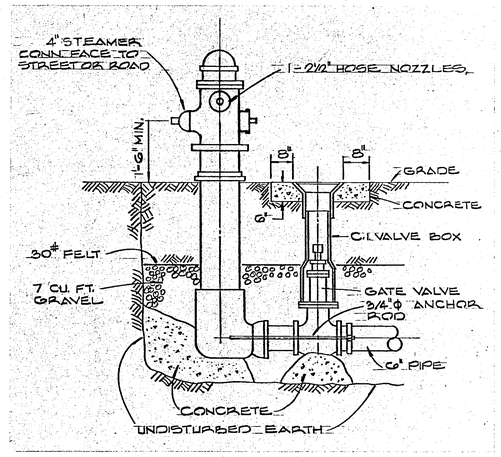

FIRE HYDRANT (6)
NOT TO SCALE

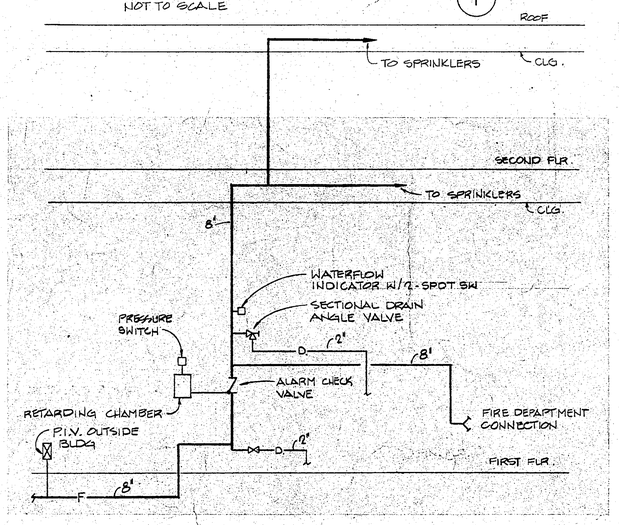

FIRE SPRINKLER RISER (7)
NOT TO SCALE

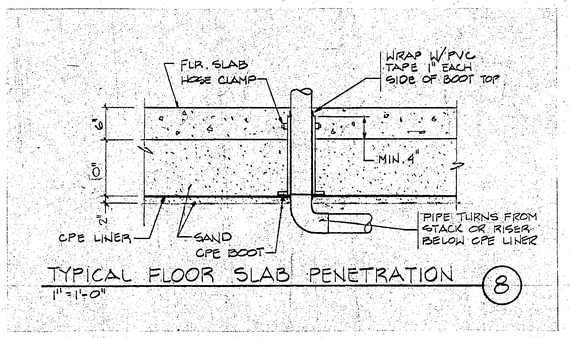

TYPICAL FLOOR SLAB PENETRATION (8)
1" = 1'-0"

HAYAKAWA ASSOCIATES
CONSULTING ENGINEERS
PHONE (213) 272-4477
1962 SO. BEVERLY DR. LOS ANGELES, CALIF. - 90035

HUGH GIBBS & DONALD GIBBS
Architects F.A.I.A.
3575 Long Beach Boulevard, Long Beach, California

DRAWN CH, RB	DATE 12-16-83
CHECKED	JOB 1791

TORRANCE TRANSIT FACILITY

TORRANCE
CALIFORNIA

FEDERAL PROJECT NO.
CA-03-0208-01

DETAILS

SHEET D-6

DIETERICH-POST CLEARPRINT 1020

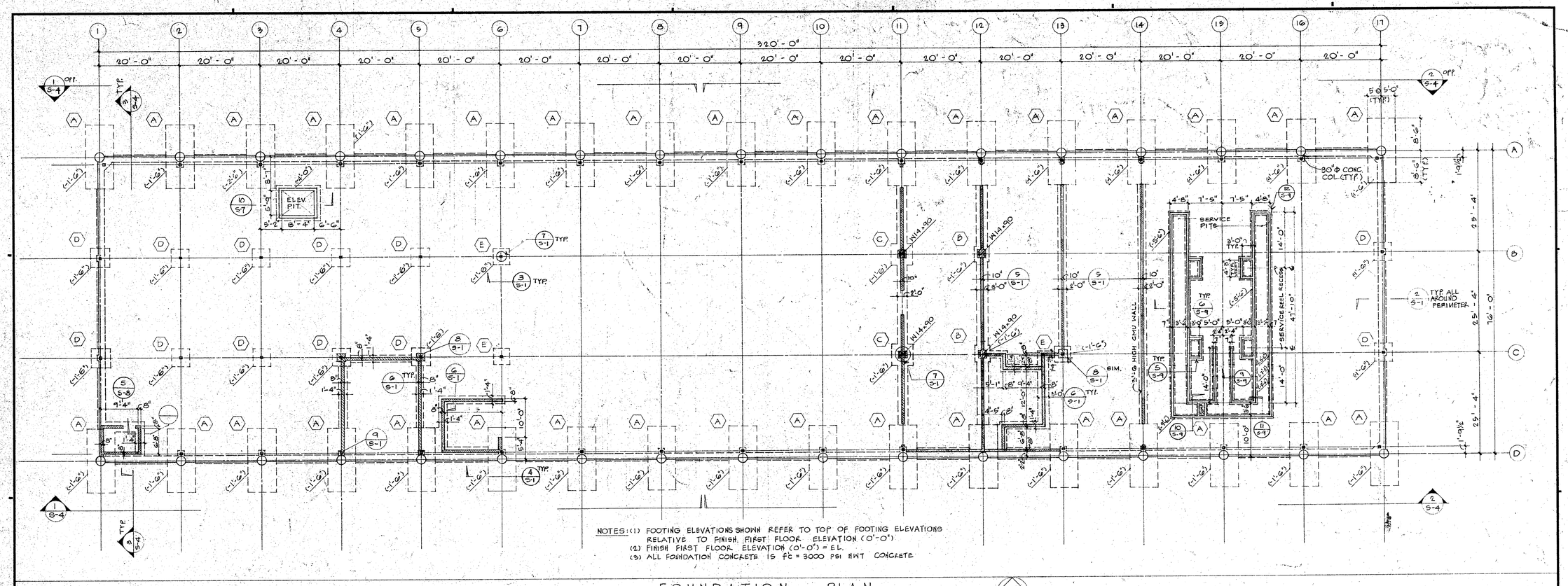

NOTES: (1) FOOTING ELEVATIONS SHOWN REFER TO TOP OF FOOTING ELEVATIONS RELATIVE TO FINISH FIRST FLOOR ELEVATION (0'-0")
(2) FINISH FIRST FLOOR ELEVATION (0'-0") = EL.
(3) ALL FOUNDATION CONCRETE IS f'c = 3000 PSI NWT CONCRETE

FOUNDATION PLAN
SCALE: 3/32" = 1'-0"

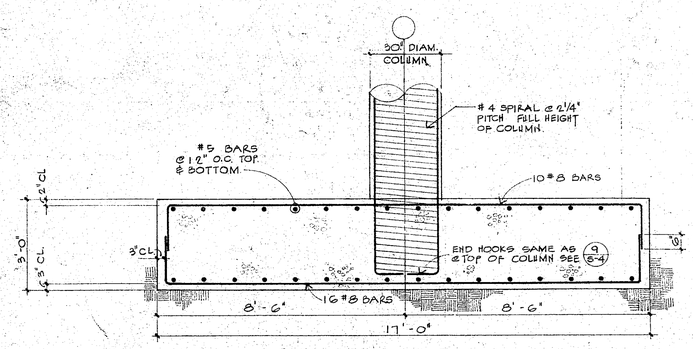

4/S-1 SECTION
SCALE: 1/2" = 1'-0"

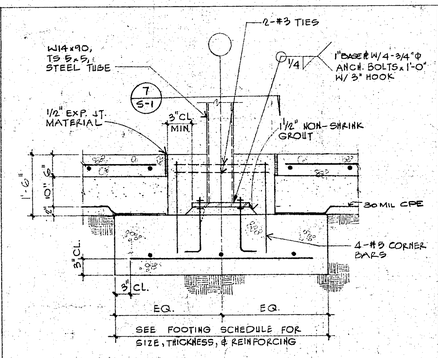

3/S-1 SECTION
SCALE: 1" = 1'-0"

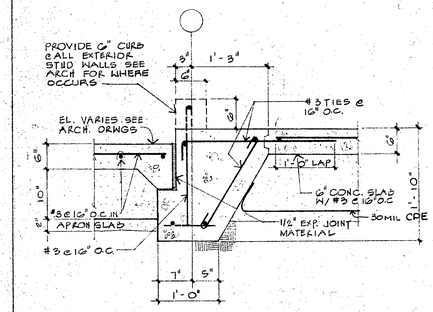

2/S-1 SECTION
SCALE: 1" = 1'-0"

TYPE	SIZE	DEPTH	REINFORCEMENT	REMARKS
A	10'-0" x 17'-0"	3'-0"	———	SEE 4/S-1
B	3'-6" SQ.	1'-0"	4-#5 EA. WAY	SEE 3/S-1
C	5'-6" SQ.	1'-1"	6-#5 EA. WAY	
D	5'-0" SQ.	1'-0"	5-#5 EA. WAY	
E	4'-0" SQ.	1'-0"	4-#5 EA. WAY	
F	7'-6" SQ.	1'-6"	7-#6 EA. WAY	SEE 3/S-1

1/S-1 FOOTING SCHEDULE

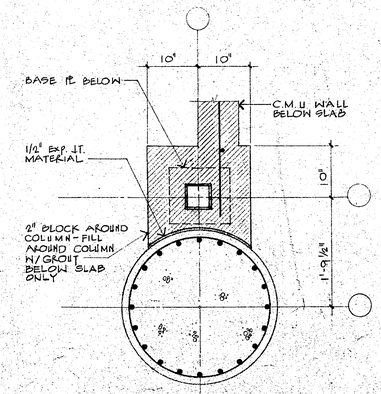

9/S-1 SECTION
SCALE: 1" = 1'-0"

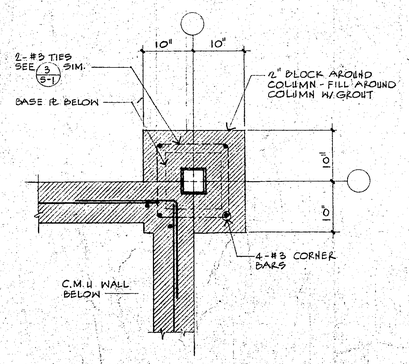

8/S-1 SECTION
SCALE: 1" = 1'-0"

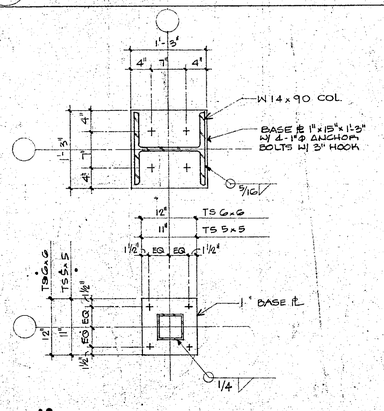

7/S-1 BASE ℄ DETAILS
SCALE: 1" = 1'-0"

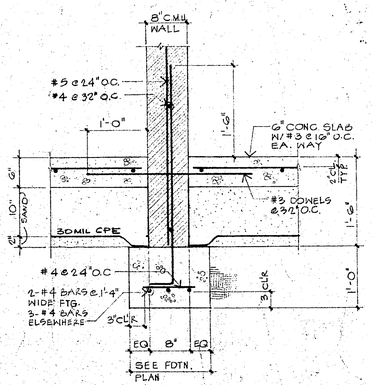

6/S-1 SECTION
SCALE: 1" = 1'-0"

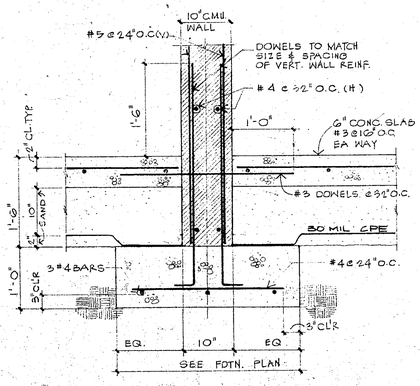

5/S-1 SECTION
SCALE: 1" = 1'-0"

CYGNA CONSULTING ENGINEERS
330 Washington Street, Suite 309
Marina Del Rey, CA 90291
(213) 821-8144

HUGH GIBBS & DONALD GIBBS
Architects F.A.I.A.
3575 Long Beach Boulevard, Long Beach, California

DRAWN JL	DATE 12-16-83
CHECKED WHF	JOB 1791

TORRANCE TRANSIT FACILITY

TORRANCE CALIFORNIA

FEDERAL PROJECT No. CA-03-0208-01

FOUNDATION PLAN & DETAILS

SHEET S-1

DIETERICH-POST CLEARPRINT 1020

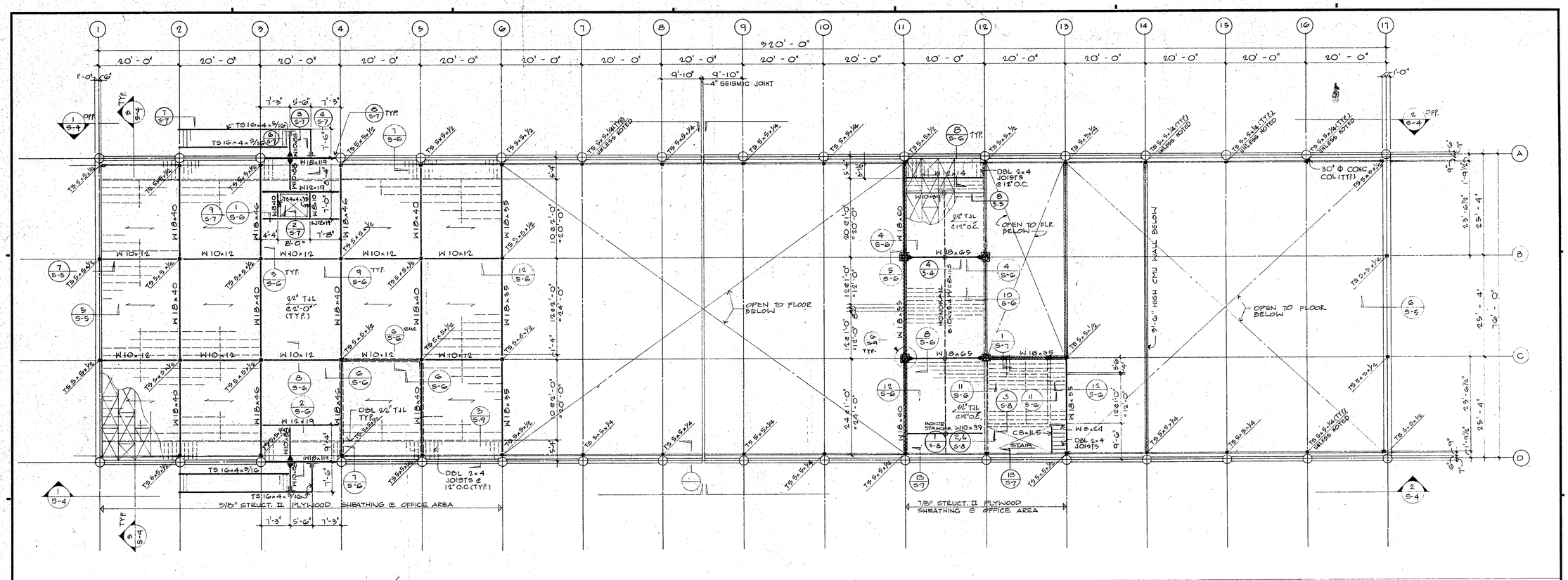

SECOND FLOOR FRAMING PLAN

SCALE : 3/32" = 1'-0"

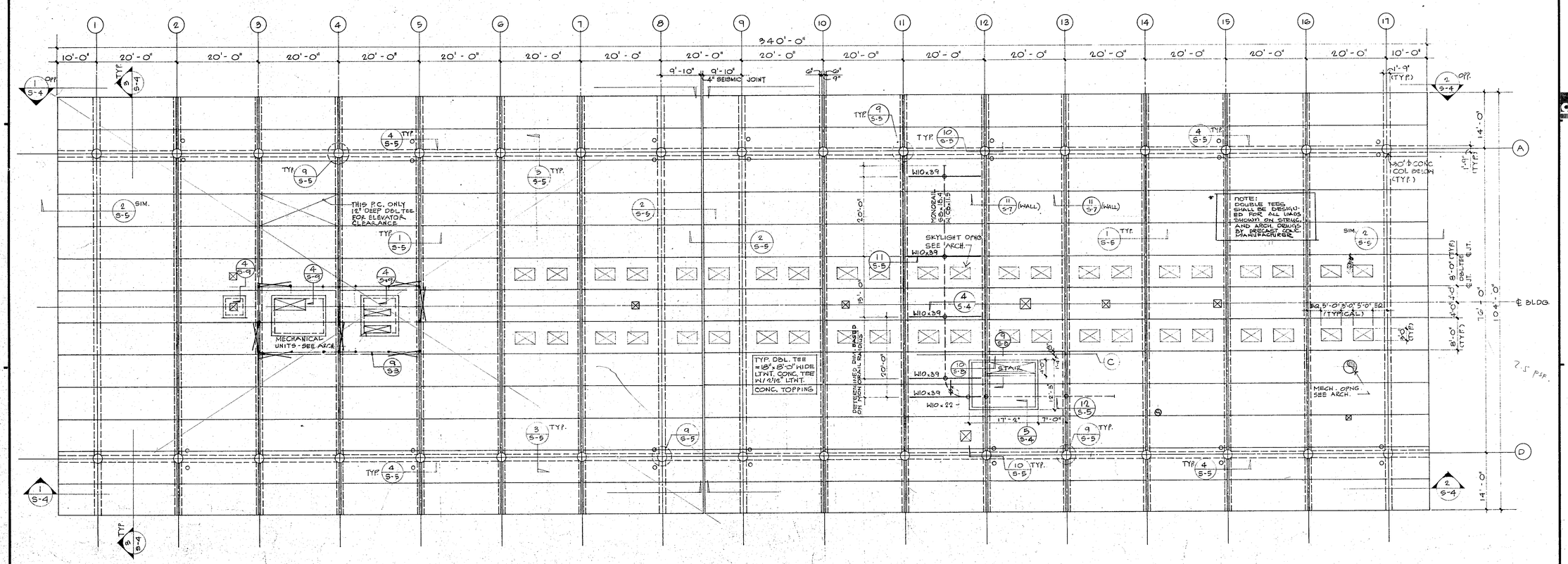

ROOF FRAMING PLAN

SCALE : 3/32" = 1'-0"

CYGNA CONSULTING ENGINEERS
330 Washington Street, Suite 309
Marina Del Rey, CA 90291
(213) 821-8144

HUGH GIBBS & DONALD GIBBS
Architects F.A.I.A.
3575 Long Beach Boulevard, Long Beach, California

DRAWN JL	DATE 12-16-83
CHECKED WHF	JOB 1791

TORRANCE TRANSIT FACILITY

TORRANCE CALIFORNIA

FEDERAL PROJECT No CA-03-0208-01

SECOND FL'R. & ROOF FRAM'G. PLANS

SHEET S-2

DIETERICH-POST CLEARPRINT 3020

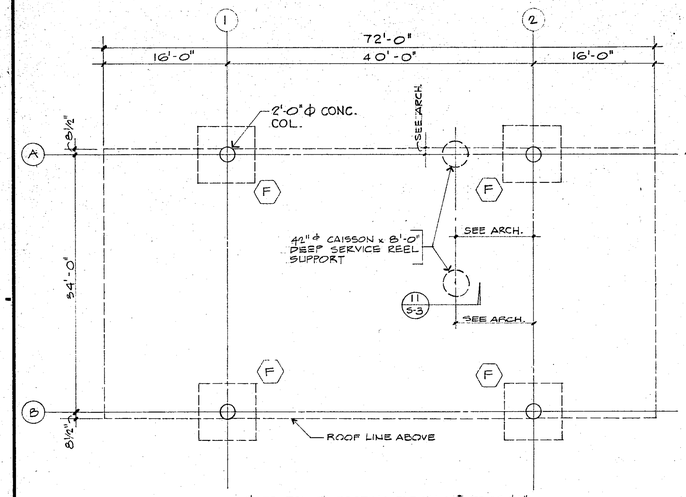

NOTE: • TOP OF FOOTING ELEVATIONS TO BE 1'-6" BELOW FINISH PAVEMENT ELEVATION. SEE ARCHITECTURAL DRAWGS.
• SEE SHEET S-1 FOR FOOTING SCHEDULE
• USE 6" CONC. SLAB W/ #3 @ 16" O.C. FOR : FUEL STATION, BUS WASHER, WASH STAND

1 S-3 FOUNDATION PLAN - FUEL STATION
SCALE: 1/8" = 1'-0"

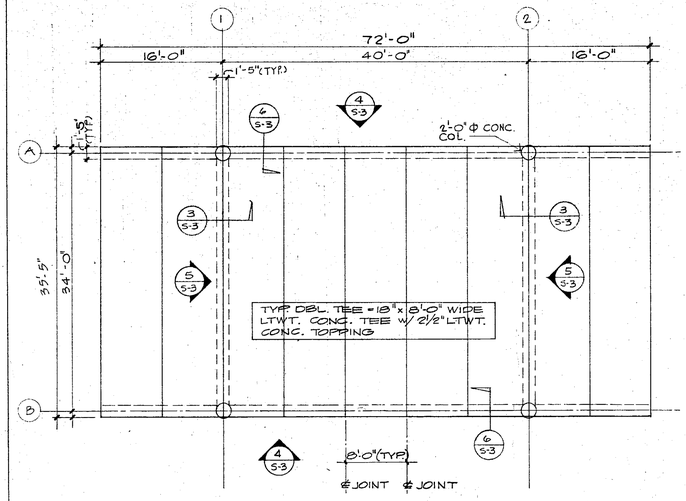

2 S-3 ROOF FRAMING PLAN - FUEL STATION
SCALE: 1/8" = 1'-0"

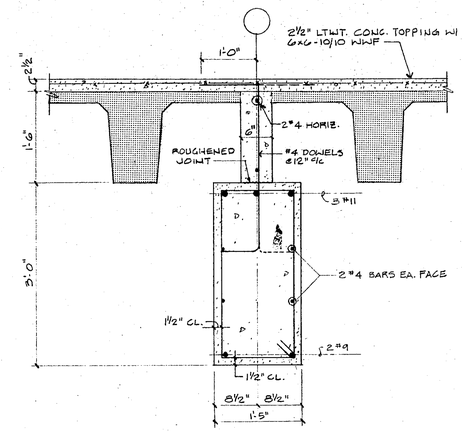

3 S-3 SECTION
SCALE: 1" = 1'-0"

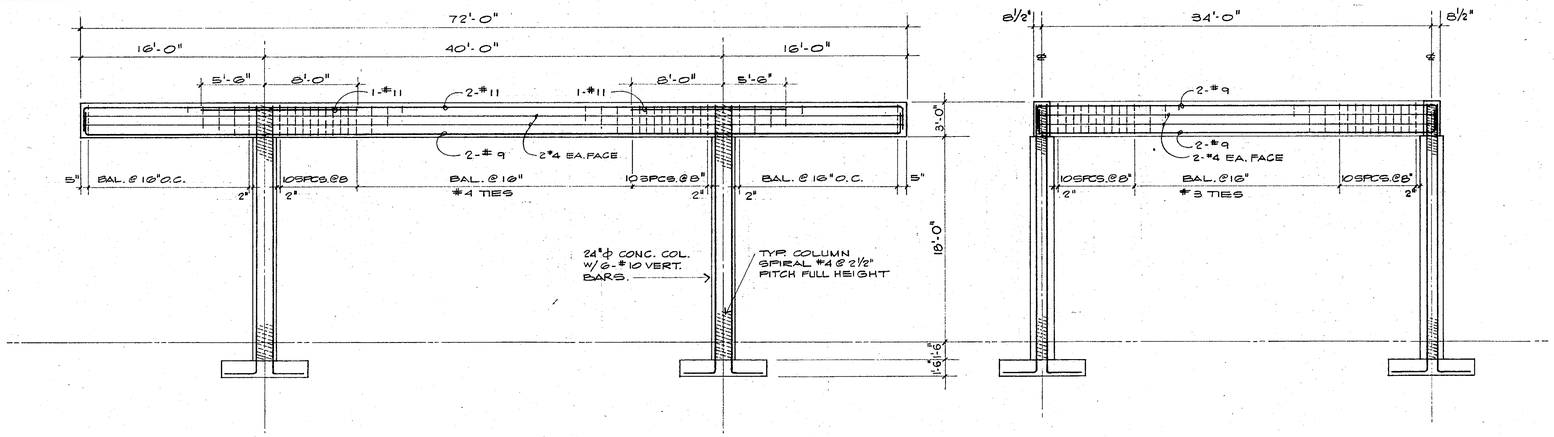

4 S-3 FRAME ELEVATION
SCALE 3/16" = 1'-0"

FRAME ELEVATION 5 S-3
SCALE 3/16" = 1'-0"

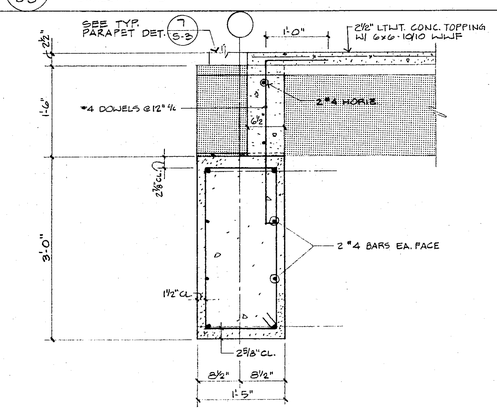

6 S-3 SECTION
SCALE: 1" = 1'-0"

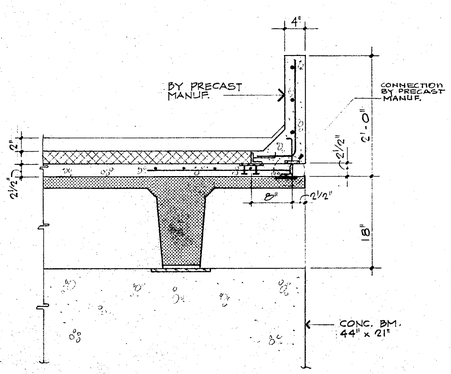

7 S-3 TYP. PARAPET DETAIL
SCALE: 1" = 1'-0"

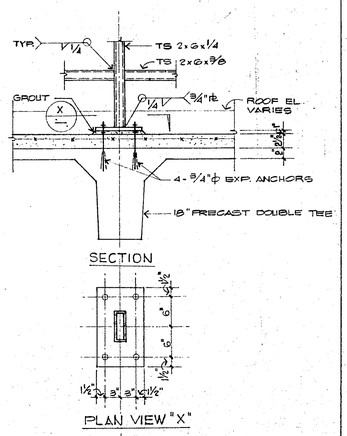

8 S-3 SECTION

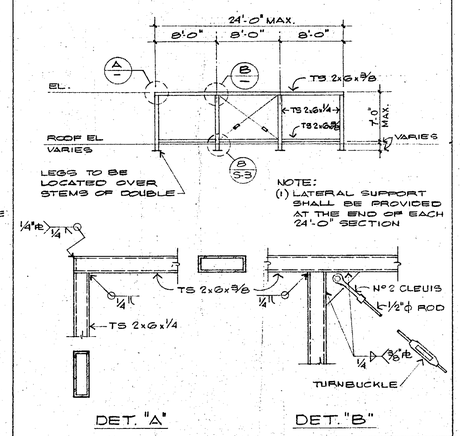

9 S-3 SECTION

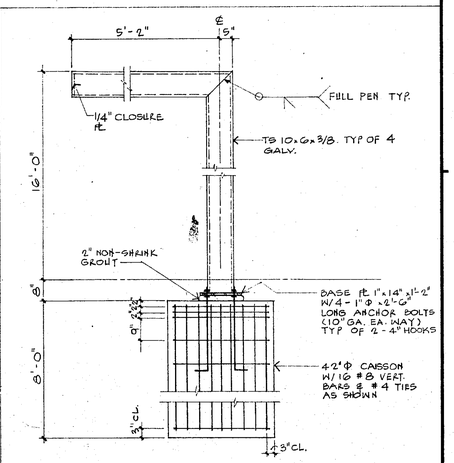

11 S-3 SERVICE REEL SUPPORT DETAIL
FUEL STATION SCALE: ½" = 1'-0"

CYGNA CONSULTING ENGINEERS
330 Washington Street, Suite 309
Marina Del Rey, CA 90291
(213) 821-8144

HUGH GIBBS & DONALD GIBBS
Architects F.A.I.A.
3575 Long Beach Boulevard, Long Beach, California

DRAWN JL	DATE 12-16-83
CHECKED WHF	JOB 1791

TORRANCE TRANSIT FACILITY

TORRANCE CALIFORNIA

FEDERAL PROJECT Nº CA-03-0208-01

FUEL STATION FOUND'N. & ROOF FRAM'G. PLANS & DETAILS

SHEET S-3

DIETERICH-POST CLEARPRINT 1020

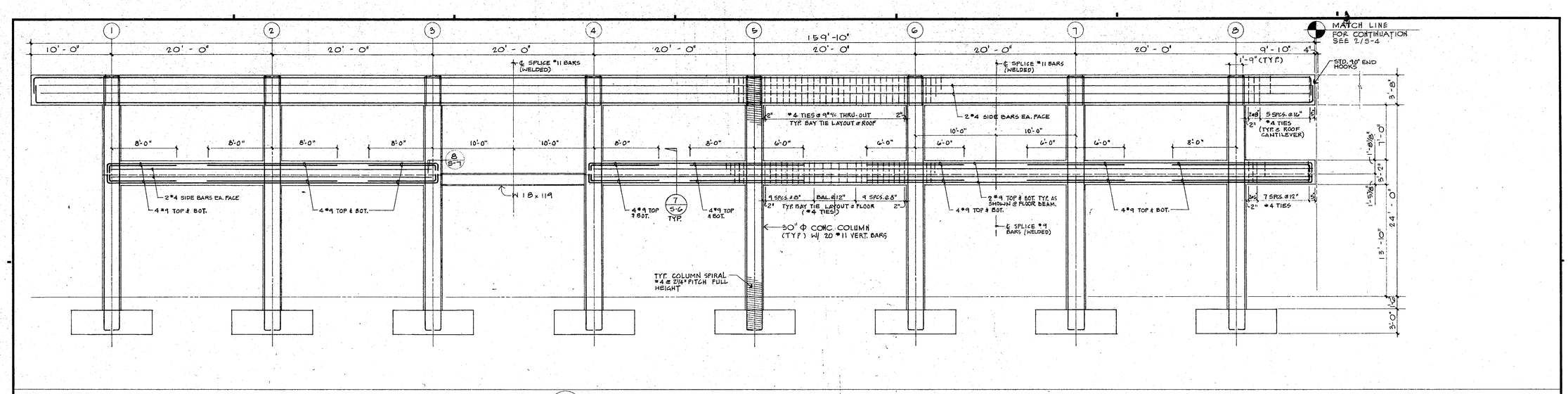

1 / S-4 FRAME ELEVATION
SCALE: 3/16" = 1'-0"

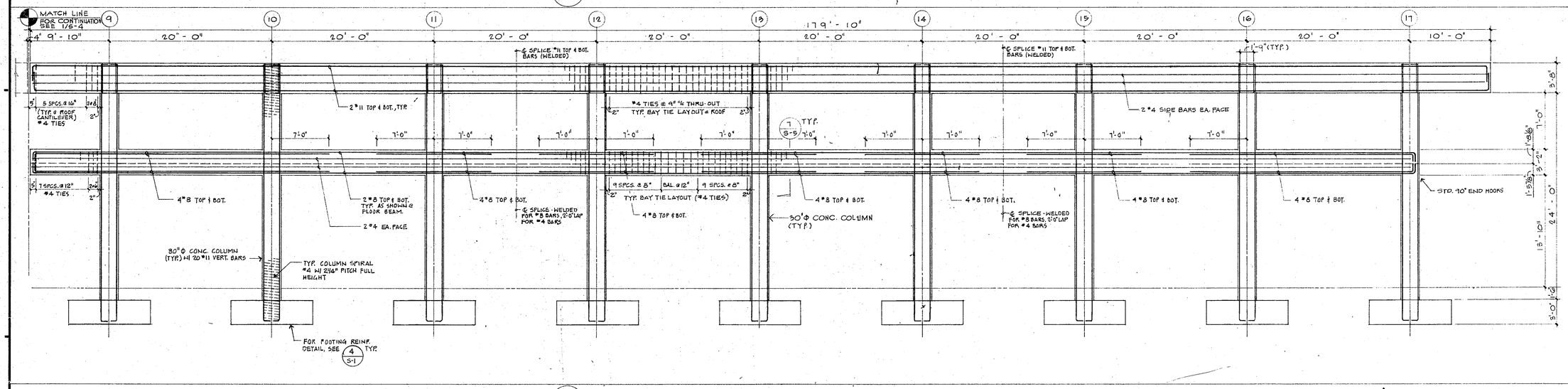

2 / S-4 FRAME ELEVATION.
SCALE: 3/16" = 1'-0"

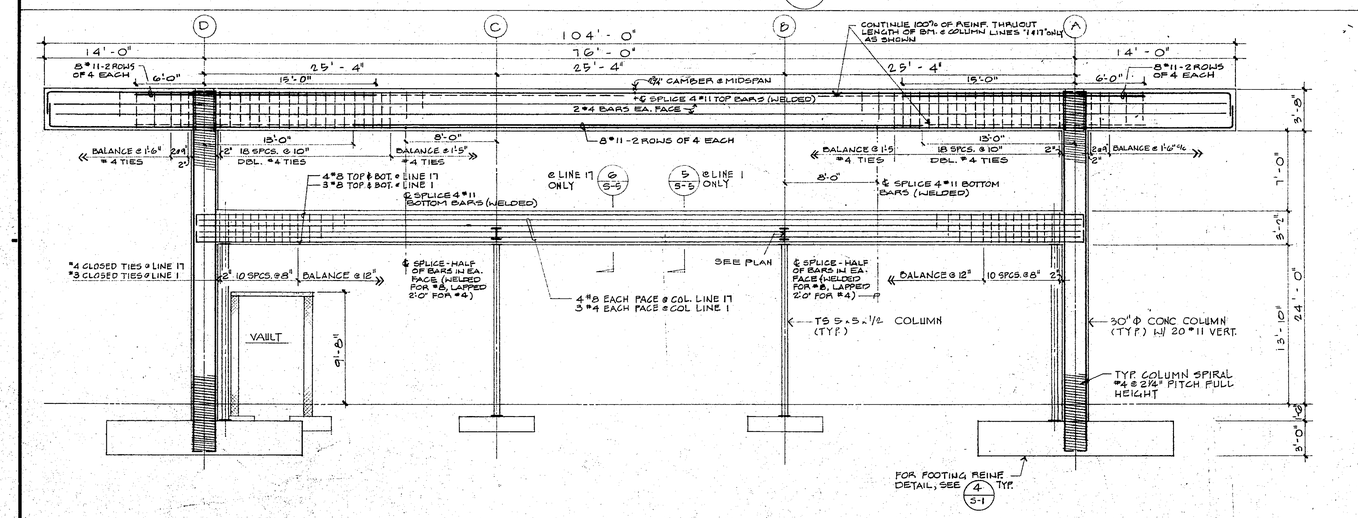

3 / S-4 FRAME ELEVATION
SCALE: 3/16" = 1'-0"

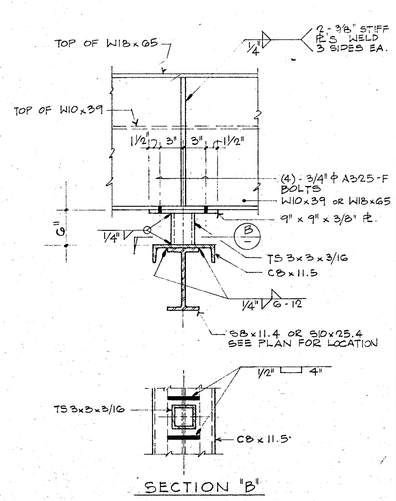

SECTION
SCALE: 1½" = 1'-0"
4 / S-4

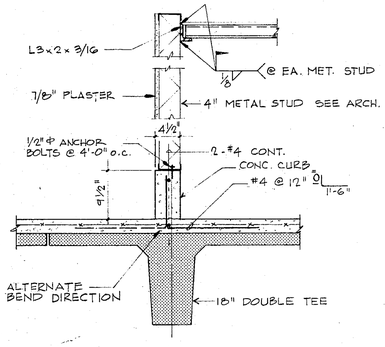

SECTION
SCALE: 1" = 1'-0"
5 / S-4

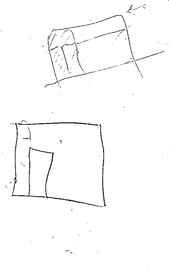

CYGNA CONSULTING ENGINEERS
330 Washington Street, Suite 309
Marina Del Rey, CA 90291
(213) 821-8144

HUGH GIBBS & DONALD GIBBS
Architects F.A.I.A.
3575 Long Beach Boulevard, Long Beach, California

DRAWN JL	DATE 12-16-83
CHECKED WHF	JOB 1791

TORRANCE TRANSIT FACILITY

TORRANCE
CALIFORNIA

FEDERAL PROJECT No
CA-03-0208-01

FRAME ELEV. & DETAILS

SHEET S-4

DIETERICH-POST CLEARPRINT 1020

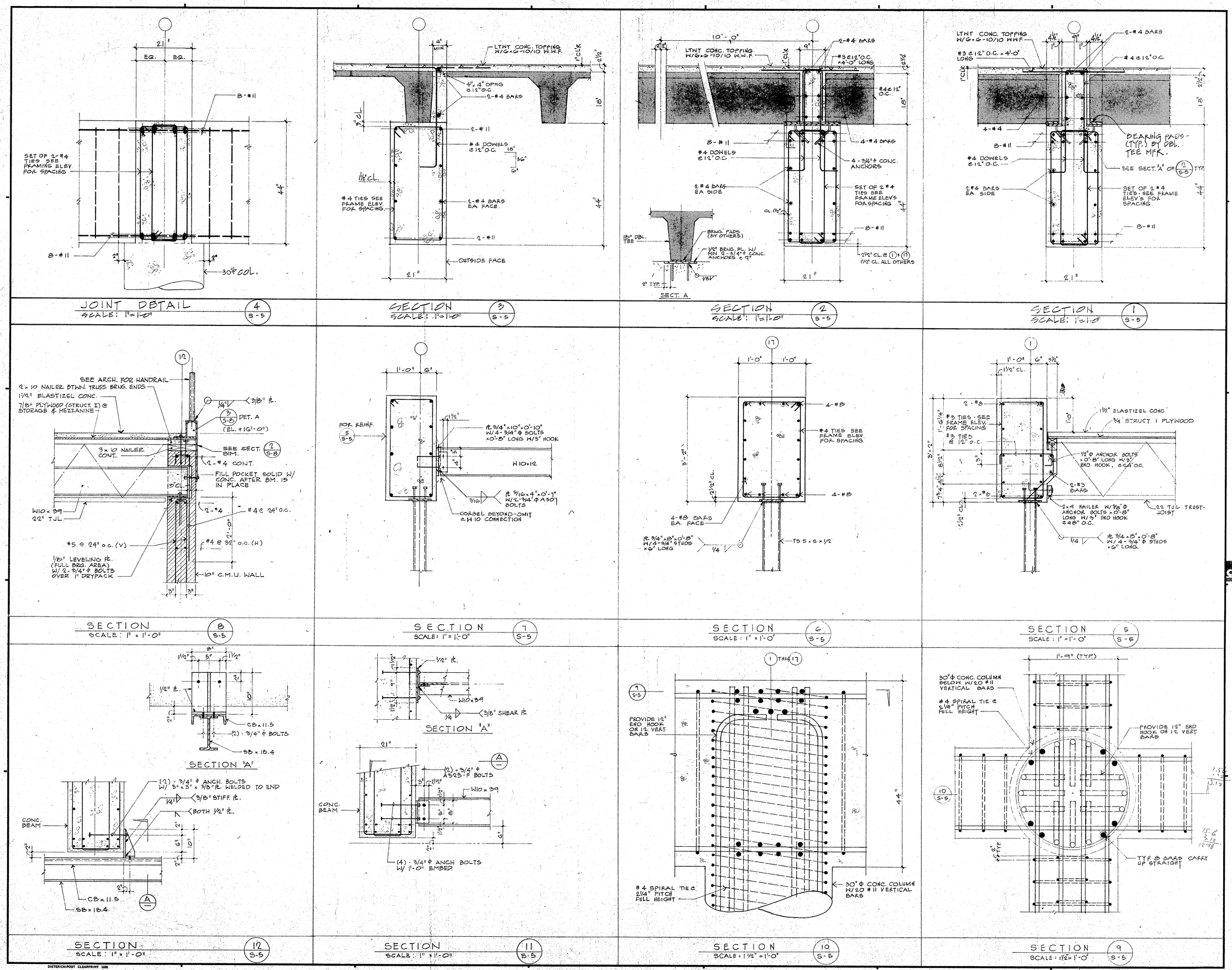

CYGNA CONSULTING ENGINEERS
330 Washington Street, Suite 309
Marina Del Rey, CA 90291
(213) 821-8144

HUGH GIBBS & DONALD GIBBS
Architects F.A.I.A.
3375 Long Beach Boulevard, Long Beach, California

DRAWN JL	DATE 12-16-83
CHECKED WHF	JOB 1791

TORRANCE TRANSIT FACILITY

TORRANCE
CALIFORNIA

FEDERAL PROJECT NO. CA-08-0208-01

SECTIONS & DETAILS

SHEET S-5

DIETERICH-POST CLEARPRINT 1020

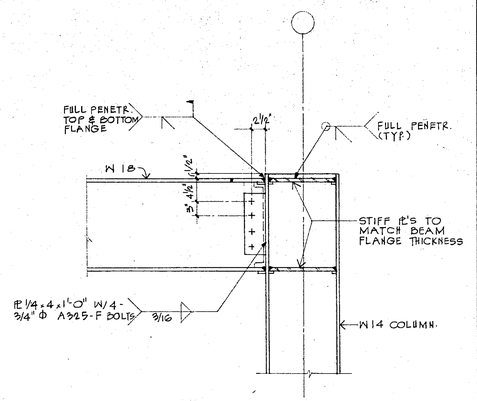

TYP. STEEL MOMENT CONN. (4 / S-6)
SCALE: 1" = 1'-0"

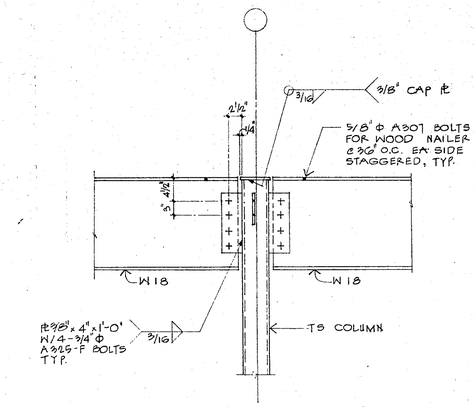

TYP. BEAM TO TUBE COL. CONN. (3 / S-6)
SCALE: 1" = 1'-0"

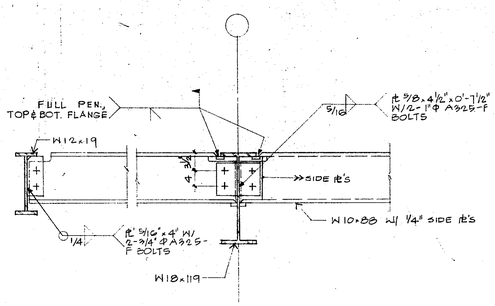

THRU GIRDER MOMENT CONN. (2 / S-6)
SCALE: 1" = 1'-0"

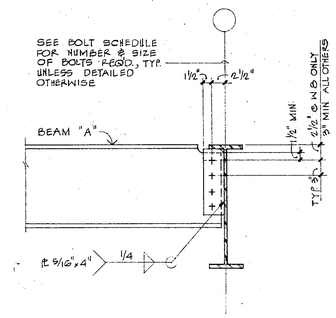

BOLT SCHEDULE		
BEAM "A" SIZE	BOLT SIZE	NO OF BOLTS
W8, W10	3/4" Φ	2
W12, W14	3/4" Φ	3
W16, W18	3/4" Φ	4

NOTE: ALL BOLTS A325-F BOLTS UNLESS SPECIFICALLY NOTED OTHERWISE.

TYP. BEAM TO GIRDER CONN. (1 / S-6)
NO SCALE

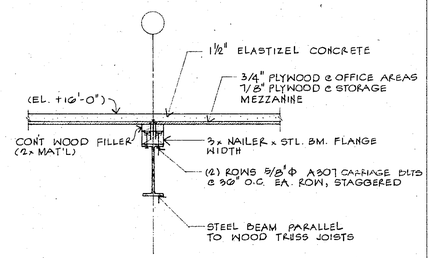

SECTION (8 / S-6)
SCALE: 1" = 1'-0"

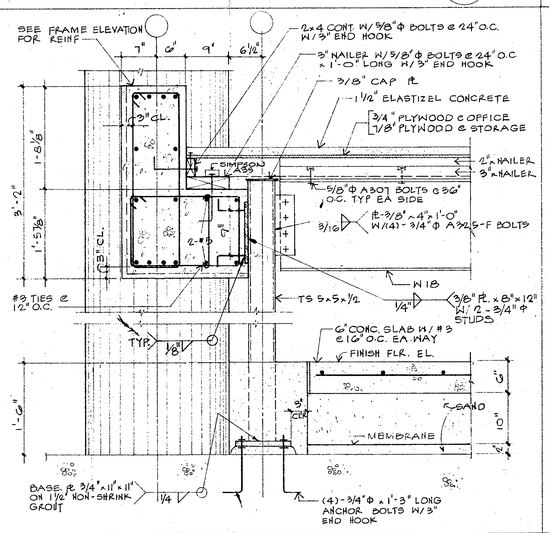

SECTION (7 / S-6)
SCALE: 1" = 1'-0"

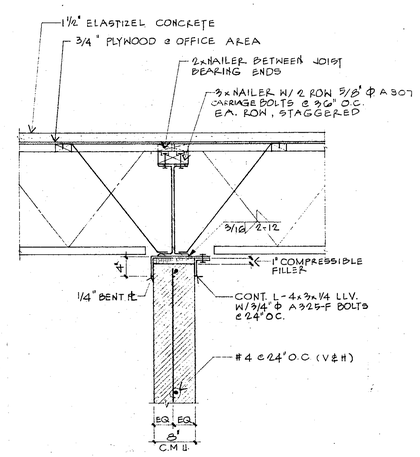

SECTION (6 / S-6)
SCALE: 1" = 1'-0"

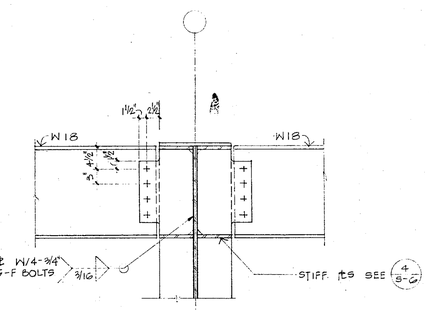

CONNECTION DETAIL (5 / S-6)
SCALE: 1" = 1'-0"

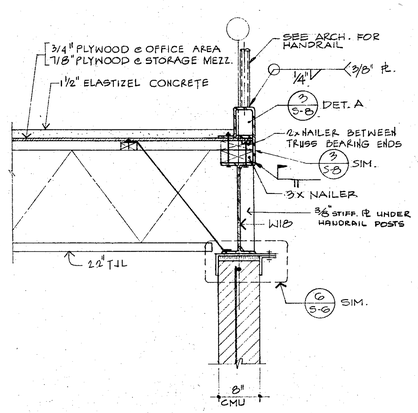

SECTION (12 / S-6)
SCALE: 1" = 1'-0"

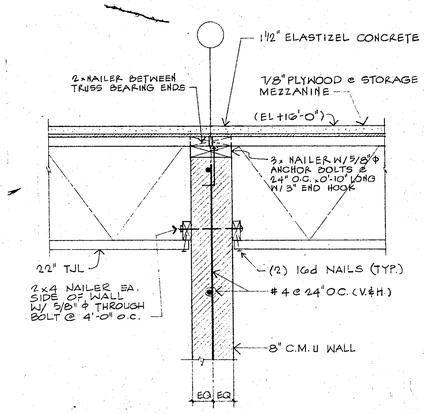

SECTION (11 / S-6)
SCALE: 1" = 1'-0"

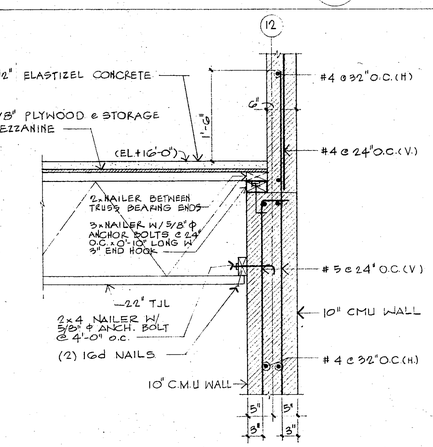

SECTION (10 / S-6)
SCALE: 1" = 1'-0"

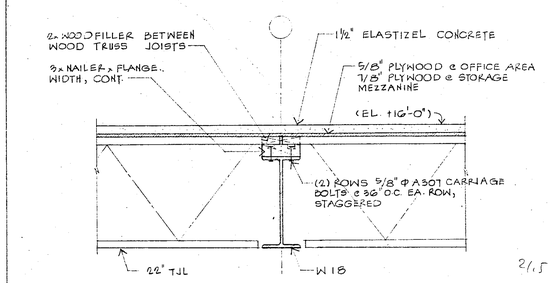

NOTE: 5/8" & 7/8 PLYWOOD TO BE STRUCT. II GRADE - TYP.

SECTION (9 / S-6)
SCALE: 1" = 1'-0"

CYGNA CONSULTING ENGINEERS
330 Washington Street, Suite 309
Marina Del Rey, CA 90291
(213) 821-8144

HUGH GIBBS & DONALD GIBBS
Architects F.A.I.A.
3575 Long Beach Boulevard, Long Beach, California

DRAWN JL	DATE 12-16-83
CHECKED WHF	JOB 1791

TORRANCE TRANSIT FACILITY

TORRANCE CALIFORNIA

FEDERAL PROJECT No. CA-08-0208-01

SECTIONS & DETAILS

SHEET S-6

DIETERICH-POST CLEARPRINT 1020

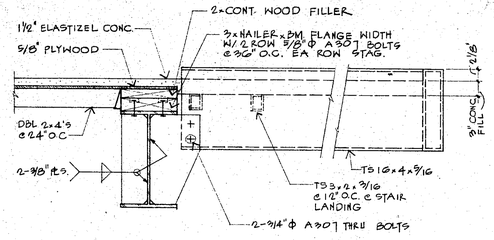

STAIR SECTION 4/S-7
SCALE: 1" = 1'-0"

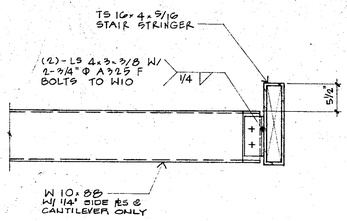

STAIR SECTION 3/S-7
SCALE: 1" = 1'-0"

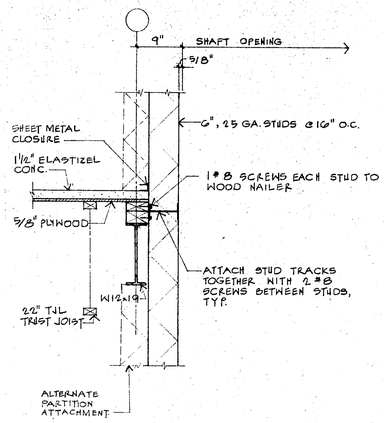

SECTION 2/S-7
SCALE: 1" = 1'-0"

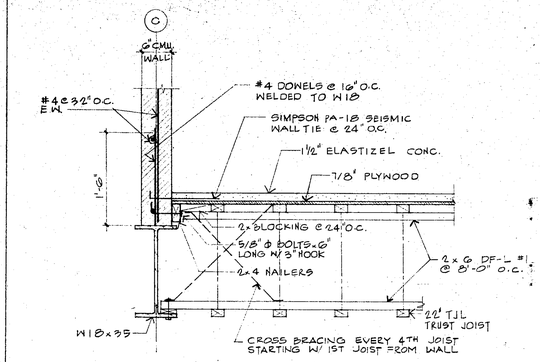

SECTION 1/S-7
SCALE: 1" = 1'-0"

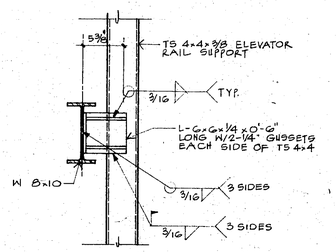

SECTION 9/S-7
NO SCALE

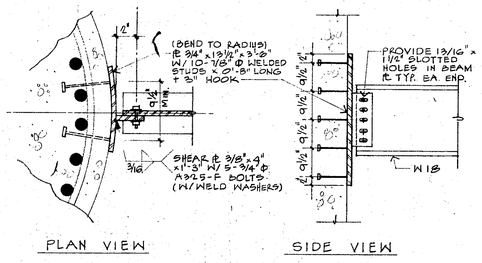

NOTE: 1. FABRICATOR SHALL FIELD VERIFY AS BUILT LOCATION OF VERTICAL COLUMN REINF. TO ASCERTAIN EXACT REQUIRED BOLT LOCATIONS TO CLEAR ALL COLUMN REINF. - SUBMIT REVISED DETAIL TO THE STRUCTURAL ENGINEER FOR APPROVAL PRIOR TO FABRICATION.

2. SPECIAL INSPECTION SHALL BE PROVIDED FOR.

SECTION 8/S-7
NO SCALE

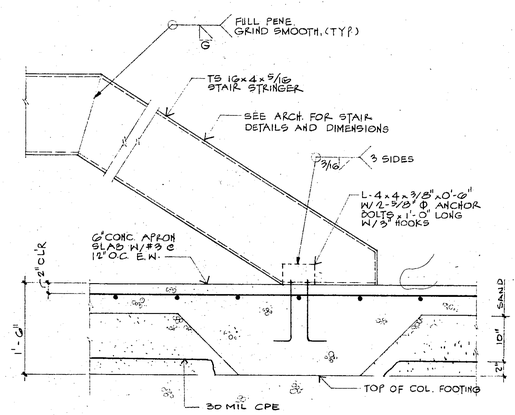

STAIR SECTION 7/S-7
SCALE: 1" = 1'-0"

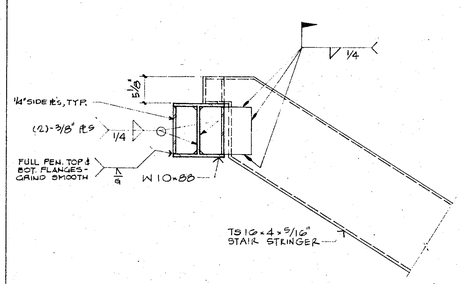

STAIR SECTION 6/S-7
SCALE: 1" = 1'-0"

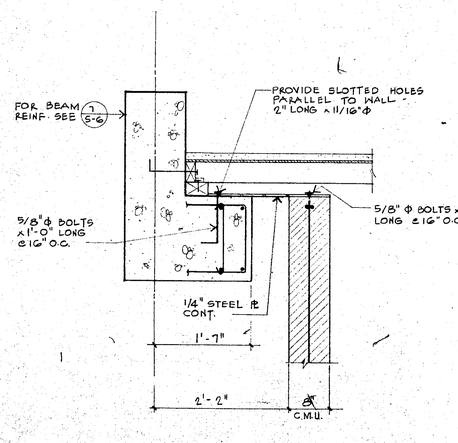

SECTION 13/S-7
SCALE: 1" = 1'-0"

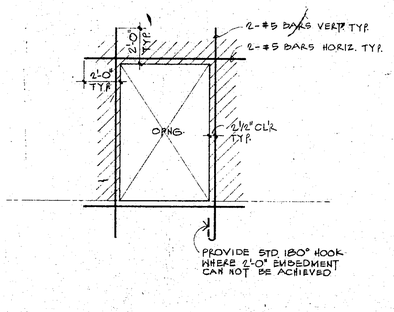

TYP. C.M.U. WALL OPENING 12/S-7
NO SCALE

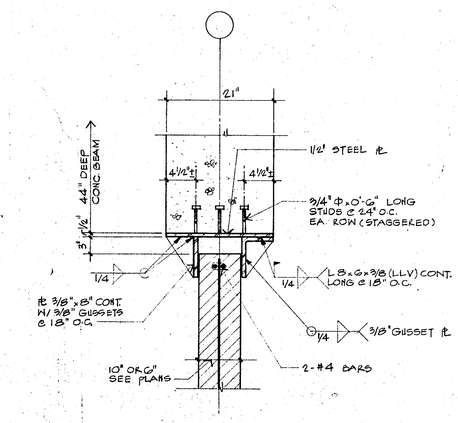

NOTE: GALVANIZE WELDED ℄ ASSEMBLY

SECTION 11/S-7
NO SCALE

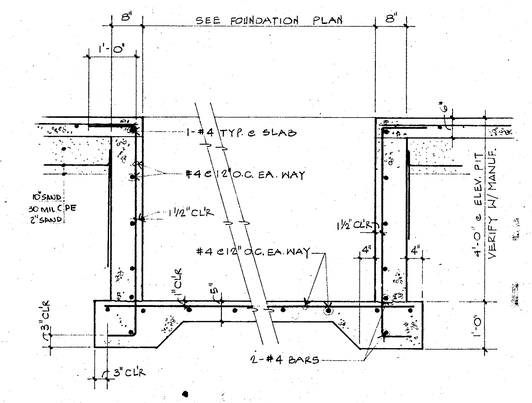

ELEVATOR PIT DETAIL 10/S-7
NO SCALE

CYGNA CONSULTING ENGINEER
330 Washington Street, Suite 309
Marina Del Rey, CA 90291
(213) 821-8144

HUGH GIBBS & DONALD GIBBS
Architects F.A.I.A.
3575 Long Beach Boulevard, Long Beach, California

DRAWN JL	DATE 12-16-83
CHECKED WHF	JOB 1791

TORRANCE TRANSIT FACILITY

TORRANCE
CALIFORNIA

FEDERAL PROJECT No
CA-03-0208-01

SECTIONS & DETAILS

SHEET S-7

DIETERICH-POST CLEARPRINT 1020

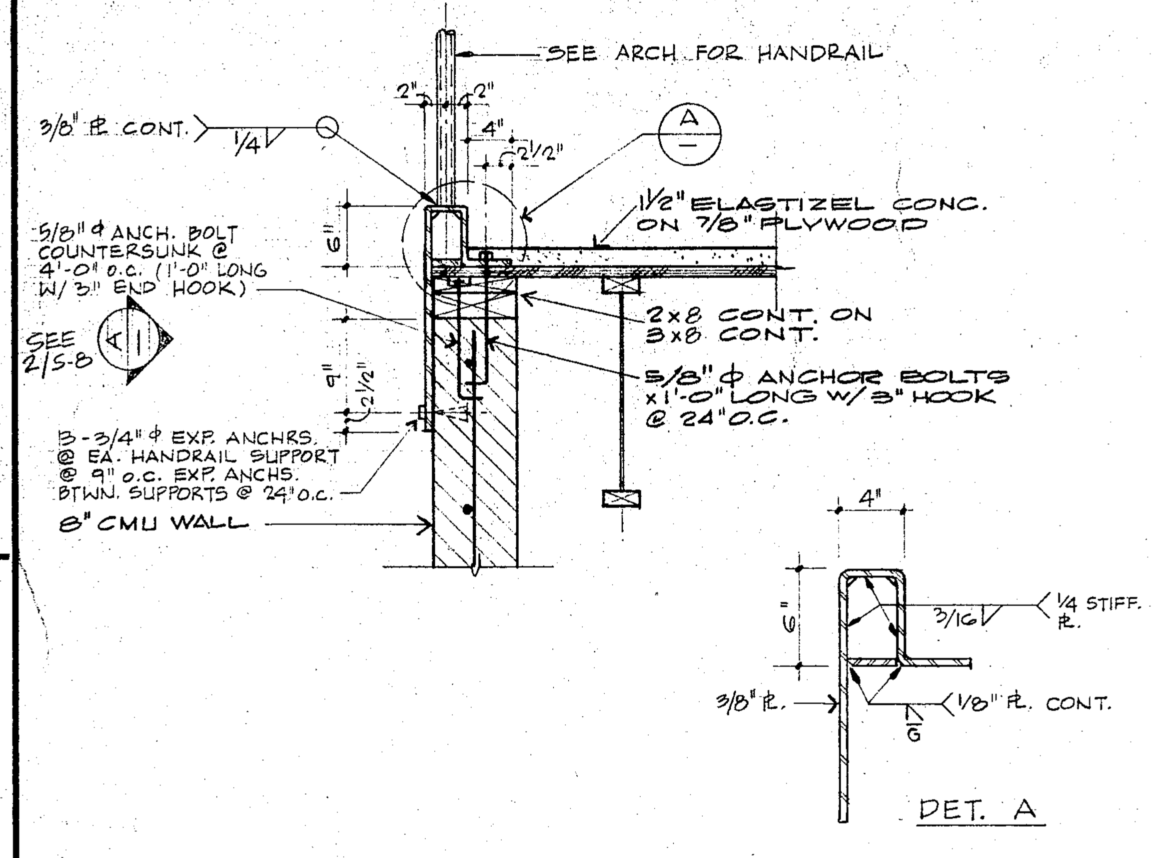

SECTION 3/S-8
SCALE 1"=1'-0"

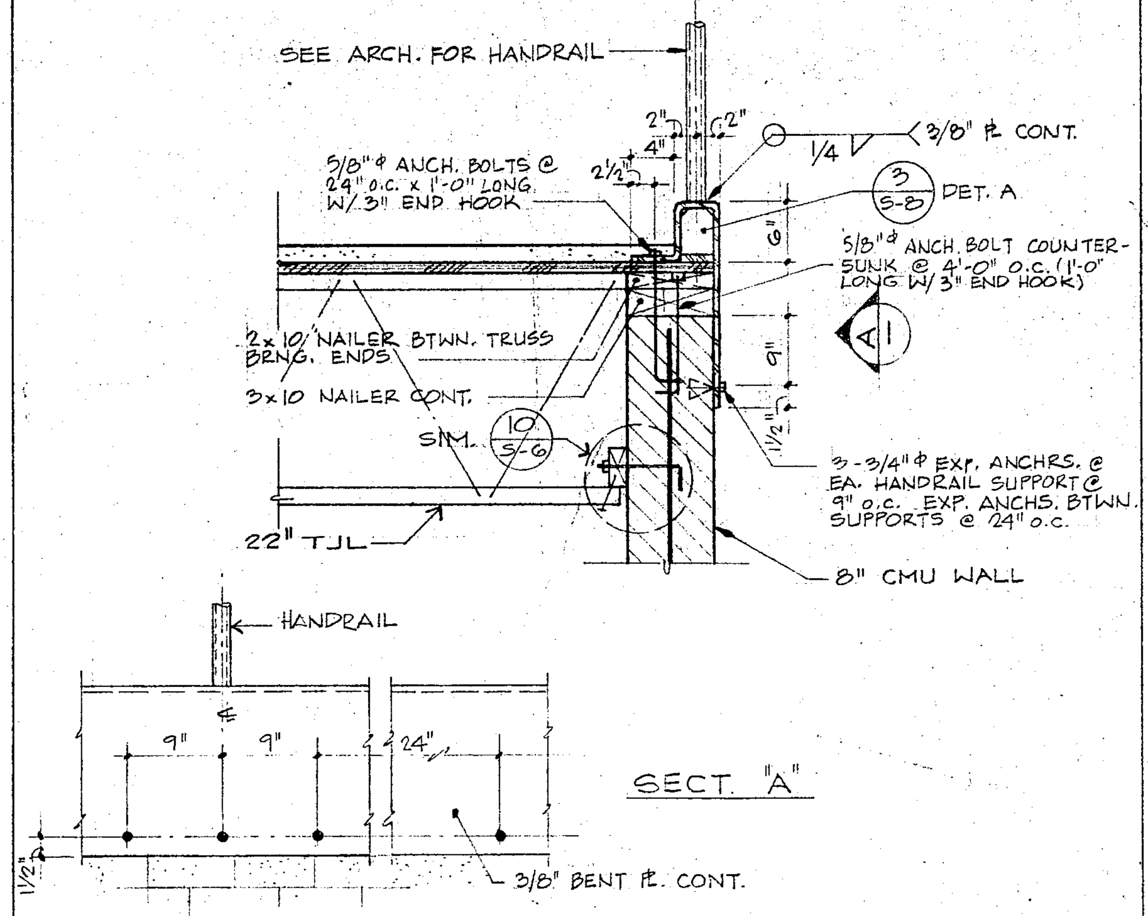

SECTION 2/S-8
SCALE 1"=1'-0"

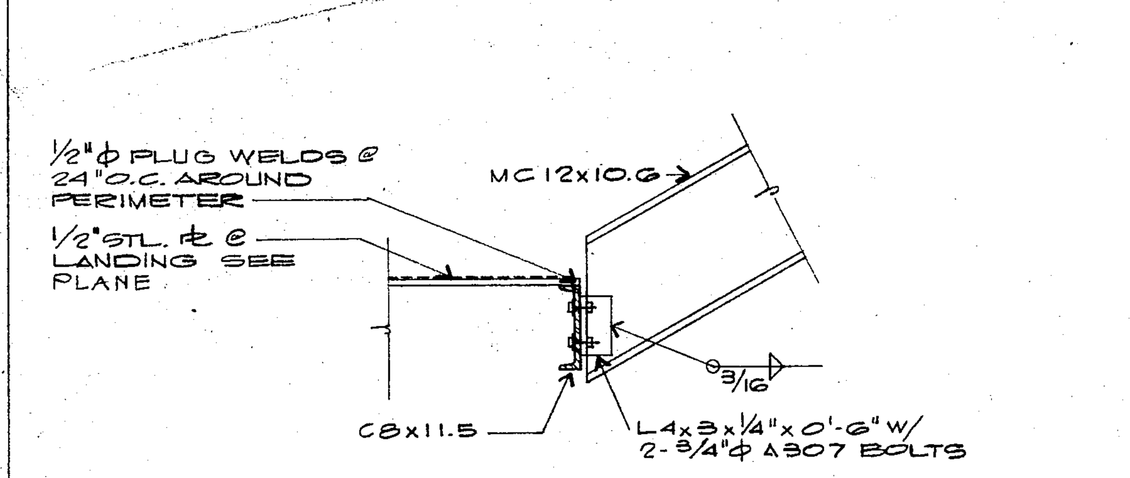

SECTION 1/S-8
SCALE 1"=1'-0"

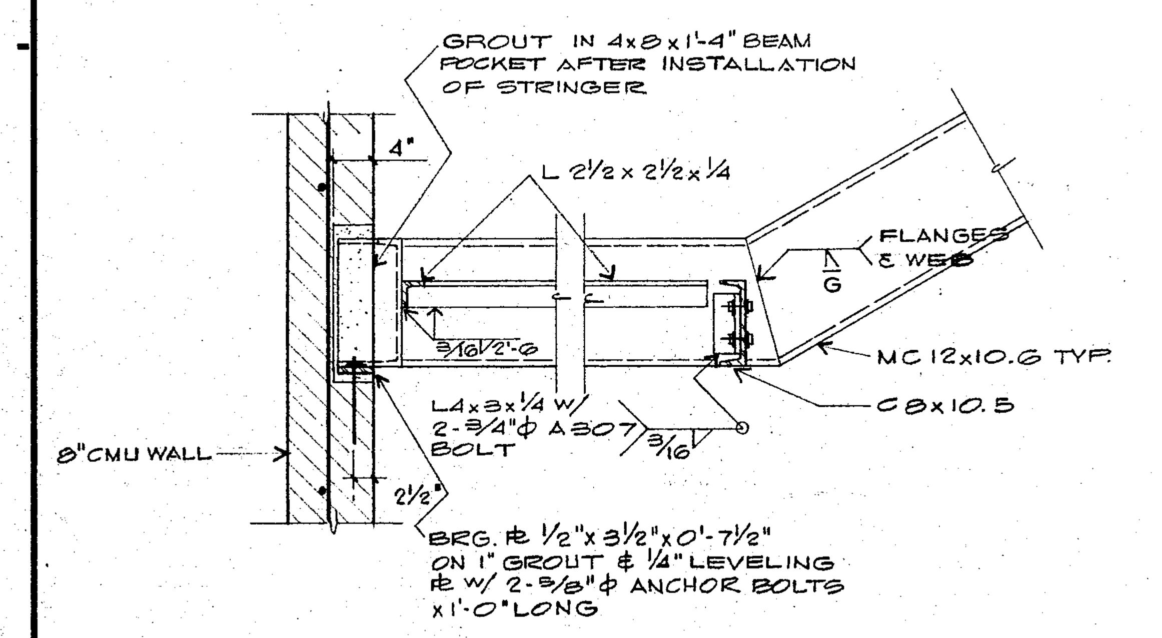

SECTION 6/S-8
SCALE 1"=1'-0"

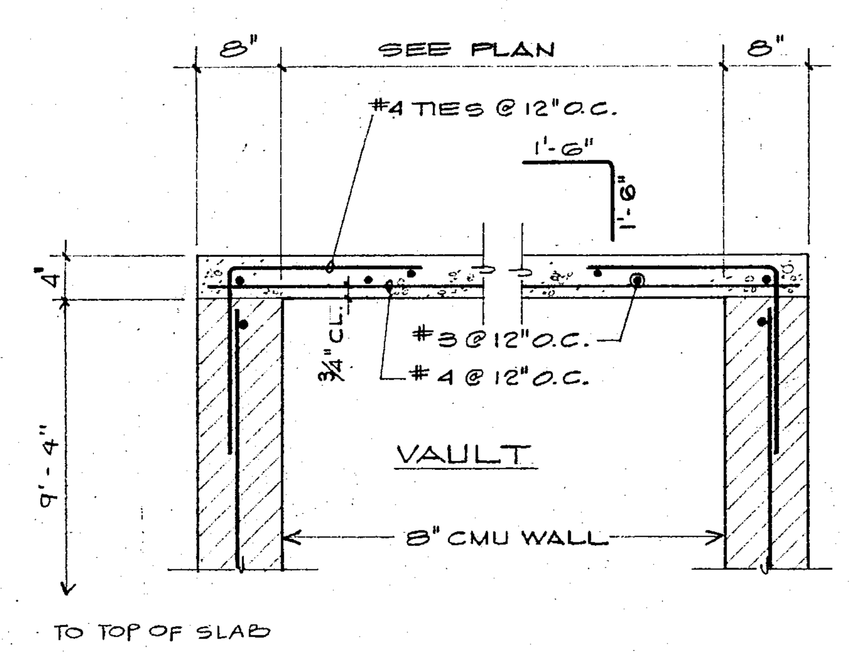

SECTION 5/S-8
SCALE 1"=1'-0"

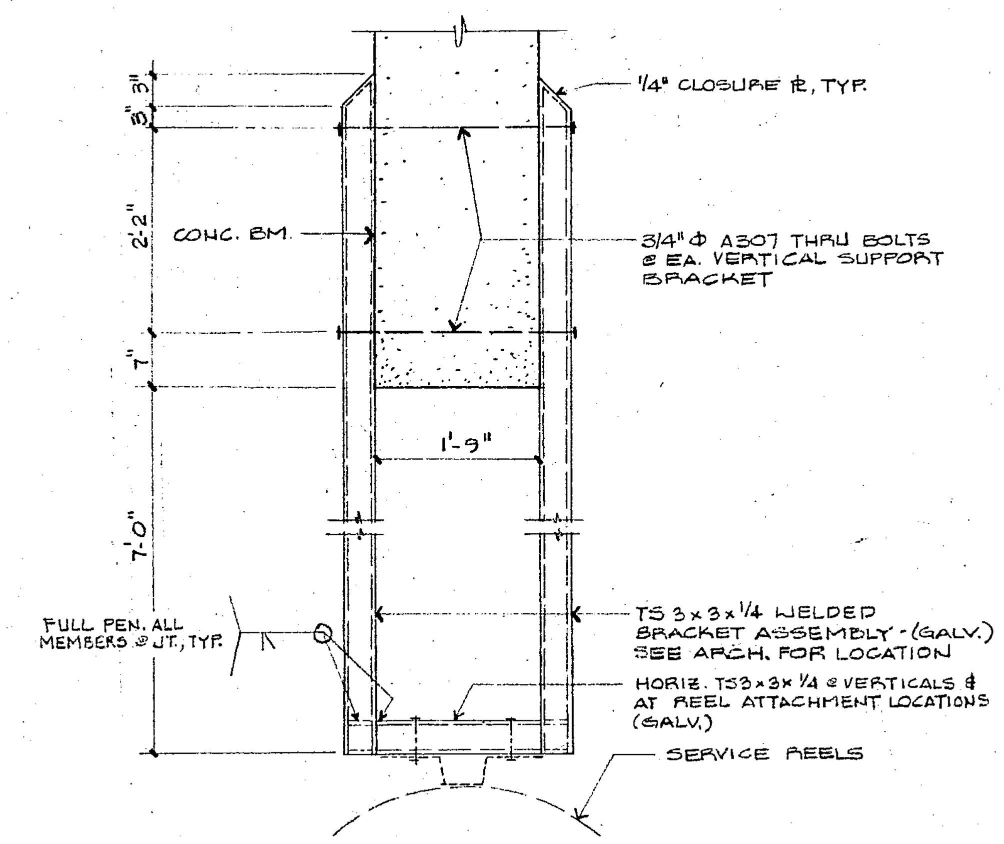

SERVICE REEL BRACKET DETAIL 4/S-8
SCALE: 3/4" = 1'-0"

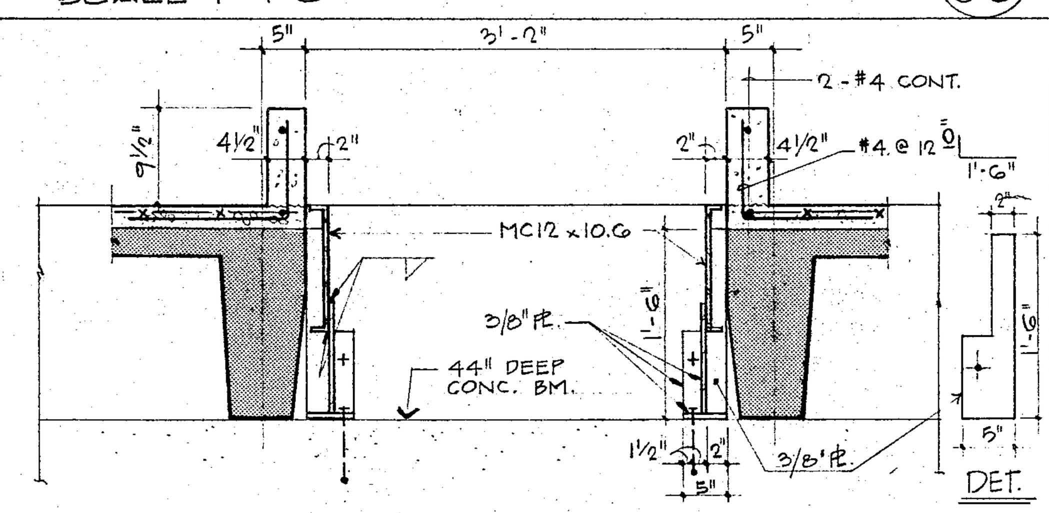

SECTION 9/S-8
SCALE: 1"=1'-0"

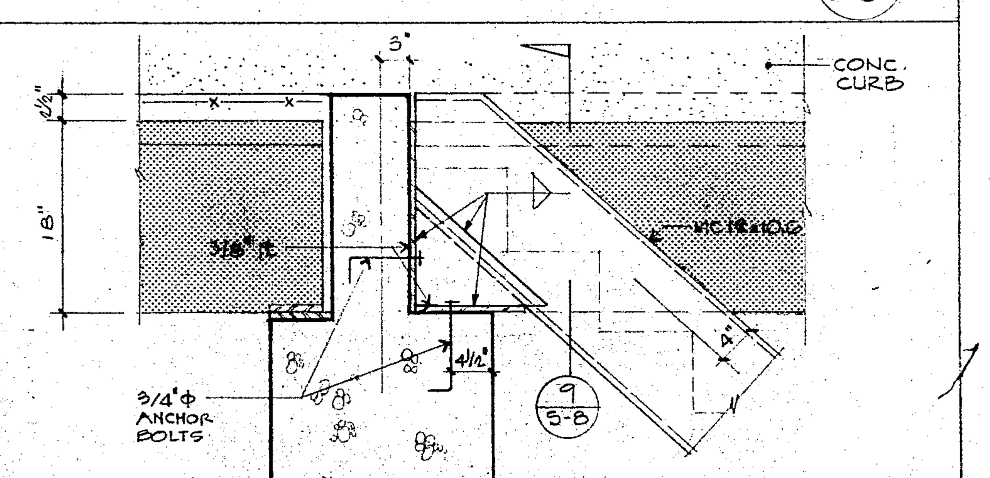

SECTION 10/S-8
SCALE: 1"=1'-0"

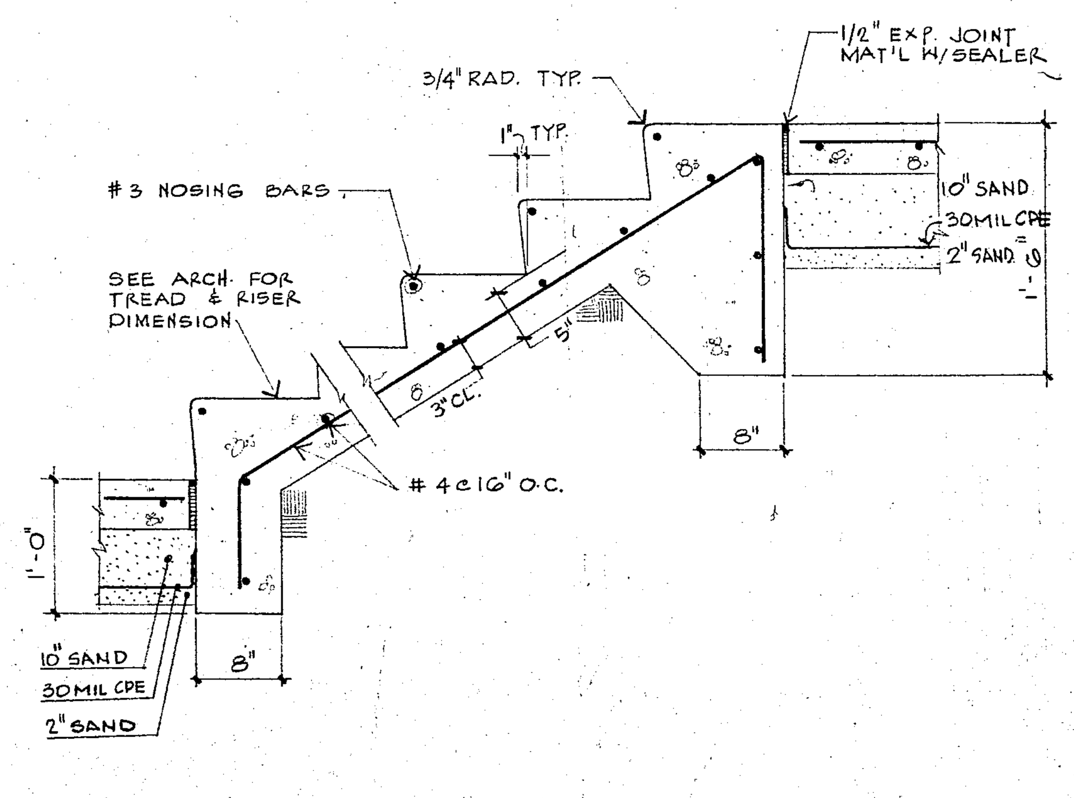

TYP. STAIR ON GRADE DETAIL 8/S-8
SCALE 1" = 1'-0"

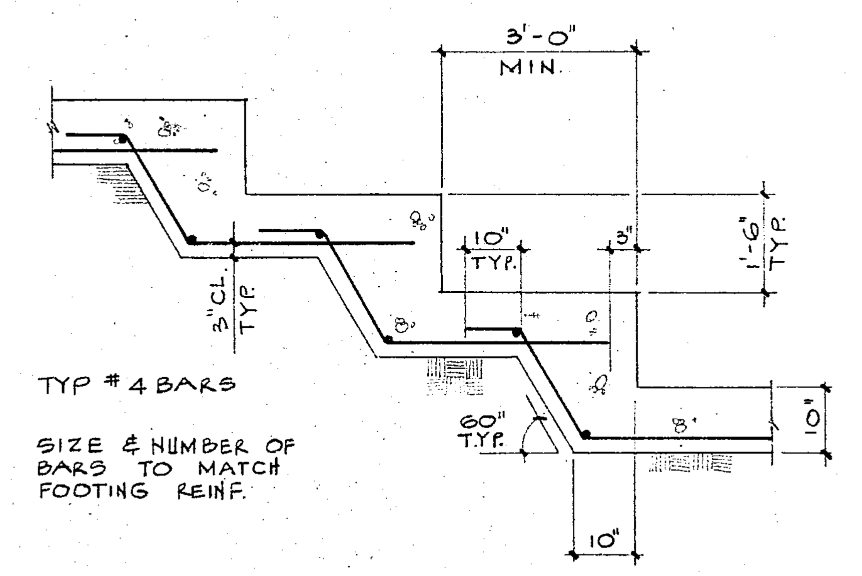

STEPPED FOOTING DETAIL 7/S-8
SCALE 1/2" = 1'-0"

STRUCTURAL GENERAL NOTES

I. BUILDING CODES: ALL WORK SHALL CONFORM TO THE 1979 UNIFORM BUILDING CODE.

II. DESIGN LOADS:

A. ROOF LIVE LOAD = 20 PSF
B. EXIT FACILITIES LIVE LOAD = 100 PSF
C. MEZZANINE STORAGE LIVE LOAD = 200 PSF
D. OFFICE AREAS LIVE LOAD = 50 PSF
E. PARTITIONS @ OFFICE AREAS = 20 PSF
F. WIND LOADS = 15 PSF
G. SEISMIC FACTORS: Z=1.0, I=1.0, K=0.67, S=1.5
H. WHERE EQUIPMENT OR MATERIALS BEING TRANSPORTED TO LOCATION EXCEEDS THE DESIGN LIVE LOADS, PLANKING SHALL BE PROVIDED ON THE FLOOR OR ROOF SLAB AND SHORING SHALL BE PROVIDED BELOW.

III. FOUNDATIONS:

A. SOILS INVESTIGATION REPORT HAS BEEN PREPARED BY WESTERN LABORATORIES, DATED JULY 19, 1982. WORK ORDER 8218. ALLOWABLE SOIL BEARING PRESSURE FOR ISOLATED FOOTINGS W/ MIN WIDTH DIM. OF 5'-0" = 4500 psi; FOR WIDTH DIM. OF LESS THAN 5'-0" = 2300 psi. FOR WALL FOOTINGS = 1800 PSF.

B. EXISTING FILL SOILS OF APPROXIMATELY 3.75 FEET AVERAGE DEPTH SHALL BE REMOVED AS REQUIRED BY THE SOILS REPORT. FOUNDATION EXCAVATIONS, SLAB EXCAVATIONS AND SOIL COMPACTION SHALL BE OBSERVED AND APPROVED BY THE SOILS ENGINEER PRIOR TO PLACEMENT OF ANY REINFORCEMENT. EXCAVATIONS SHALL ALSO BE OBSERVED AND APPROVED BY THE SOILS ENGINEER AFTER REINFORCEMENT HAS BEEN PLACED AND BEFORE CONCRETE IS POURED.

IV. CONCRETE:

A. REINFORCED CONCRETE HAS BEEN DESIGNED BY THE "STRENGTH DESIGN METHOD" AND SHALL BE TESTED ACCORDINGLY.

B. POURED IN PLACE CONCRETE SHALL BE OF THE FOLLOWING STRENGTH (NORMAL WEIGHT) EXCEPT AS NOTED IN ITEM 'C' BELOW:
1. CONCRETE COLUMNS --- F'c = 8000 psi, BEAMS F'c = 6000 psi
2. ALL OTHER CONCRETE------------F'C = 3,000 PSI

C. TOPPING FOR ROOF DOUBLE TEES SHALL BE 110 PCF LIGHTWEIGHT CONCRETE WITH F'C = 3,000 PSI.

D. ALL DOUBLE TEES SHALL BE 18" DEEP x 8'-0" WIDE LIGHTWEIGHT CONCRETE DOUBLE TEES.

E. ALL REINFORCING SHALL CONFORM TO ASTM A615, GRADE 60; WELDED WIRE FABRIC SHALL CONFORM TO ASTM A189.

F. CONCRETE PROTECTION FOR REINFORCEMENT, UNLESS DETAILED OTHERWISE, SHALL BE AS FOLLOWS:
1. CAST AGAINST & PERMANENTLY EXPOSED TO EARTH-----3 "
2. FORMED, EXPOSED TO EARTH/WEATHER, #6 & LARGER---2 "
3. FORMED, EXPOSED TO EARTH/WEATHER, #5 & SMALLER--1½"
4. NOT EXPOSED TO EARTH/WEATHER, BEAMS, COLUMNS----1½" (INCLUDING TIES)
5. NOT EXPOSED TO EARTH/WEATHER, SLABS & WALLS----- 3/4"

V. STRUCTURAL STEEL:

A. STRUCTURAL STEEL SHAPES AND PLATES SHALL CONFORM TO ASTM A36.

B. STEEL TUBES SHALL CONFORM TO ASTM A500, GRADE B, OR ASTM A501.

C. STEEL PIPE SHALL CONFORM TO ASTM A53, TYPE E OR S, GRADE B.

D. ALL BOLTED CONNECTIONS, UNLESS OTHERWISE SHOWN, SHALL BE MADE WITH 3/4" DIAMETER A325-F BOLTS.

E. ALL HIGH STRENGTH BOLTS SHALL BE INSTALLED IN ACCORDANCE WITH PARAGRAPH 5d (1980), TIGHTENING BY USE OF A CALIBRATED WRENCH, OF THE "SPECIFICATIONS FOR STRUCTURAL JOINTS USING ASTM A325 OR A490 BOLTS", AS APPROVED BY THE RESEARCH COUNCIL ON STRUCTURAL CONNECTIONS AND ENDORSED BY THE AMERICAN INSTITUTE OF STEEL CONSTRUCTION.

F. USE E70XX ELECTRODES FOR ALL SHOP AND FIELD WELDS.

G. ALL WELDING SHALL BE DONE IN ACCORDANCE WITH THE PROVISIONS OF AWS D1.1-79, AND SHALL BE PERFORMED BY CERTIFIED WELDERS.

VI. MASONRY:

A. BLOCK MASONRY UNITS SHALL BE GRADE A LIGHTWEIGHT UNITS CONFORMING TO ASTM C-90 MINIMUM ULTIMATE STRENGTH OF BLOCK SHALL BE 1,500 PSI FOR SOLID GROUTED WALLS.

B. MORTAR: TYPE S WITH MINIMUM COMPRESSIVE STRENGTH OF 1,800 PSI.

C. MASONRY GROUT SHALL HAVE A MINIMUM COMPRESSIVE STRENGTH OF 2,000 PSI AT 28 DAYS.

D. REINFORCING BARS SHALL BE DEFORMED BARS CONFORMING TO ASTM A-615 GRADE 60.

E. MINIMUM LAP OF REINFORCING STEEL SHALL BE 48 BAR DIAMETERS, 2'-0" MINIMUM. PROVIDE 3/4" MINIMUM CLEARANCE FOR BLOCK MASONRY IN CELLS.

F. HIGH LIFT GROUTING OF BLOCK MASONRY: PROVIDE CLEAN-OUT OPENINGS AT THE BOTTOM OF THE WALL.

G. ALL WALLS SHALL BE FULLY GROUTED.

H. ALL MASONRY HAS BEEN DESIGNED ASSUMING SPECIAL INSPECTION; IF HIGH-LIFT GROUTED CONSTRUCTION IS USED, FULL INSPECTION SHALL BE PROVIDED IN CONFORMANCE WITH U.B.C. SECTION 2413 (d) 8.

VII. DIMENSIONS:

NOTED ON DRAWINGS ARE TO BE VERIFIED BY THE CONTRACTOR; ALL DISCREPANCIES ARE TO BE NOTED ON SHOP DRAWINGS OR REPORTED IN WRITING TO THE ARCHITECT. SETTING OUT AND ACCURACY OF THE BUILDING WORK SHALL BE THE RESPONSIBILITY OF THE CONTRACTOR.

VIII. CONTINUOUS INSPECTION:

WILL BE REQUIRED FOR THE FOLLOWING ITEMS: ALL CONCRETE WORK; HIGH STRENGTH BOLTING: ALL STRUCTURAL STEEL WELDING; MASONRY

IX. WELDING

A. ALL SHOP WELDING SHALL BE PERFORMED IN A SHOP OF A LICENSED FABRICATOR BY CERTIFIED WELDERS APPROVED BY THE CITY OF TORRANCE BUILDING DEPT.

B. ALL FIELD WELDS SHALL BE PERFORMED BY FIELD CERTIFIED WELDERS APPROVED BY THE CITY OF TORRANCE BUILDING DEPT.

X. DESIGN LIVE LOAD OF THE MEZZANINE STORAGE AREA (200 PSF) SHALL BE POSTED BY DURABLE METAL SIGNS IN ACCORDANCE WITH UBC SECTION 2304 (e).

XI. PLYWOOD NAILING

A. PLYWOOD DIAPHRAGM NAILING @ THE SECOND FLOOR OFFICE & MEZZANINE STORAGE AREAS SHALL BE AS FOLLOWS: (BLOCKED DIAPHRAGMS)
- NAIL SPACING @ DIAPHRAGM BOUNDARIES & @ STEEL MOMENT FRAMES IN MEZZ. STORAGE: 10d NAILS @ 2 1/2" o/c
- NAIL SPACING @ OTHER PLYWOOD EDGES: 10d NAILS @ 4" o/c
- NAIL SPACING @ INTERMEDIATE FRAMING MEMBERS: 10d NAILS @ 10" o/c
- 5/8" & 7/8" PLYWOOD TO BE STRUCT. II

XII. PRECAST CONC. DBL TEES:

A. DBL. TEE BEAMS SHALL BE DESIGNED & DETAILED BY THE MANUFACTURER... PLANS & CALCULATIONS SHALL BE SUBMITTED TO THE STRUCTURAL ENGR. & TO THE TORRANCE DEPT. OF BUILDING & SAFETY FOR REVIEW PRIOR TO ERECTION.

B. CONNECTIONS OF THE DBL. TEES TO THE STRUCTURAL FRAME SHALL ALSO BE SUBJECT TO REVIEW AS NOTED ABOVE.

C. ALL EMBEDED STEEL ITEMS EXPOSED TO WEATHER SHALL BE STAINLESS STEEL - 316L

CYGNA CONSULTING ENGINEERS
330 Washington Street, Suite 309
Marina Del Rey, CA 90291
(213) 821-8144

HUGH GIBBS & DONALD GIBBS
Architects F.A.I.A.
3575 Long Beach Boulevard, Long Beach, California

DRAWN	DATE
JL	12-16-83
CHECKED WHF	JOB 1791

TORRANCE TRANSIT FACILITY

TORRANCE CALIFORNIA

FEDERAL PROJECT Nº CA-03-0208-01

SECTIONS & GEN. NOTES

SHEET S-8

DIETERICH-POST CLEARPRINT 1020

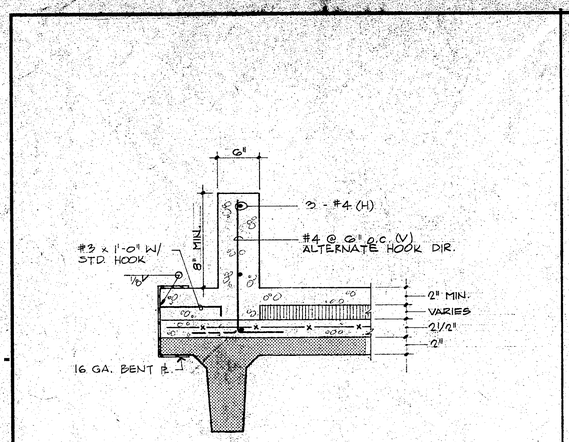

4 / S-9 ROOF CURB DETAIL
SCALE: 1" = 1'-0"

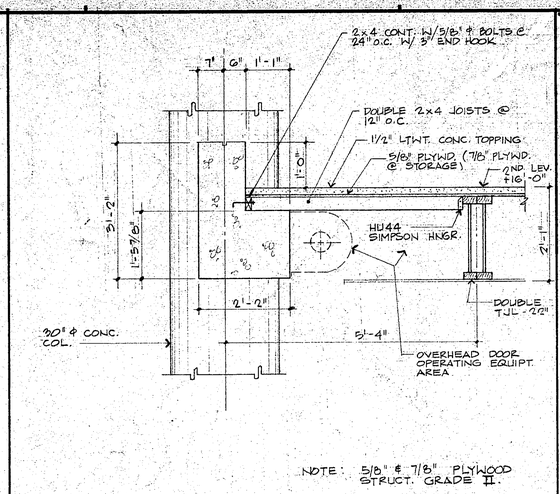

3 / S-9 SECTION
SCALE = 3/4" = 1'-0"

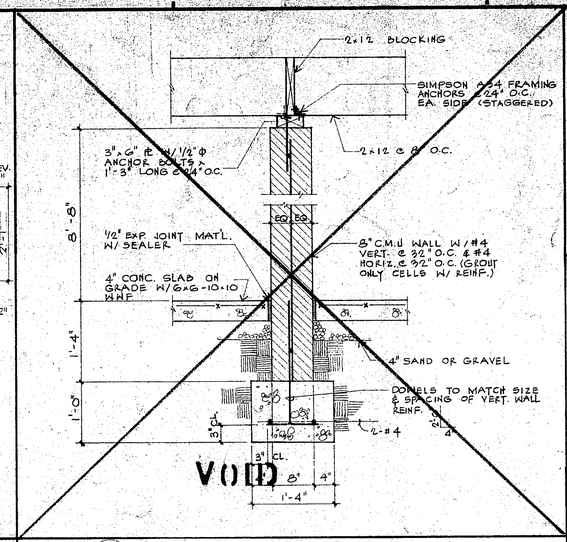

2 / S-9 SECTION
SCALE: 1" = 1'-0"

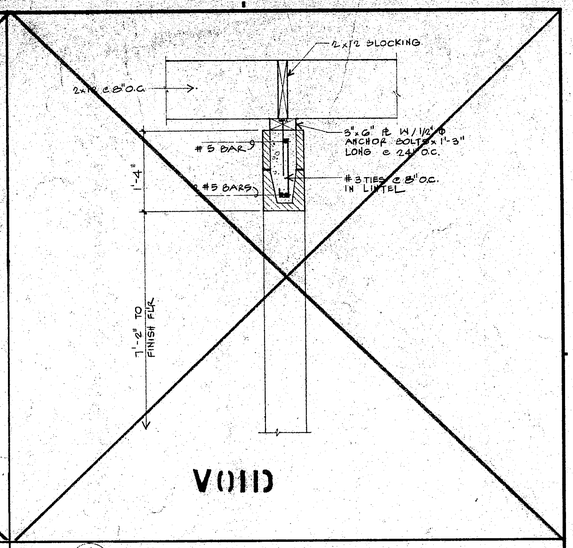

1 / S-9 SECTION
SCALE: 1" = 1'-0"

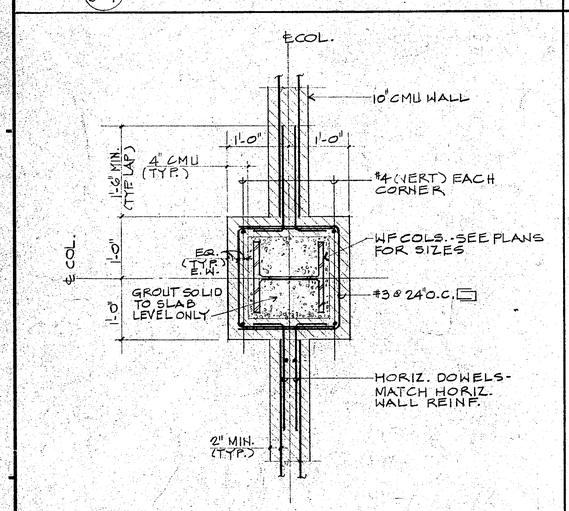

8 / S-9 PLAN SECTION
SCALE: 1" = 1'-0"

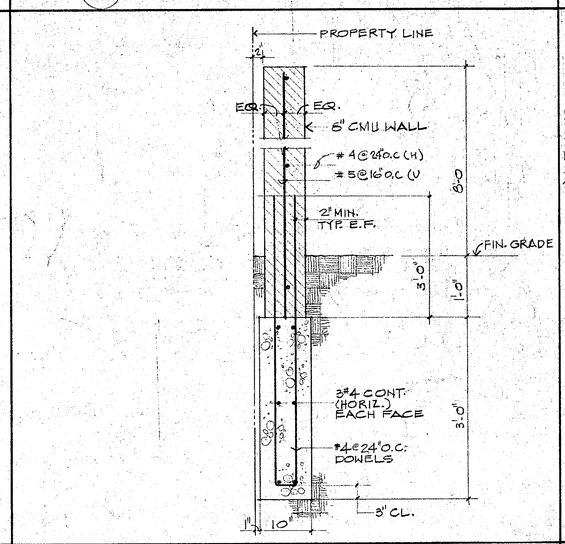

7 / S-9 SECTION
SCALE: 1" = 1'-0"

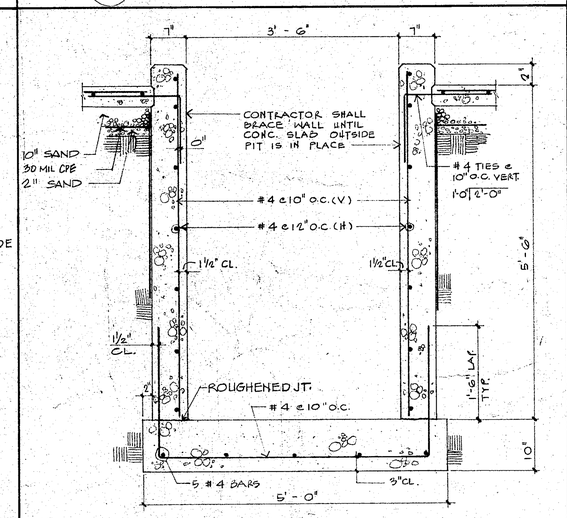

6 / S-9 SECTION
SCALE: 1" = 1'-0"

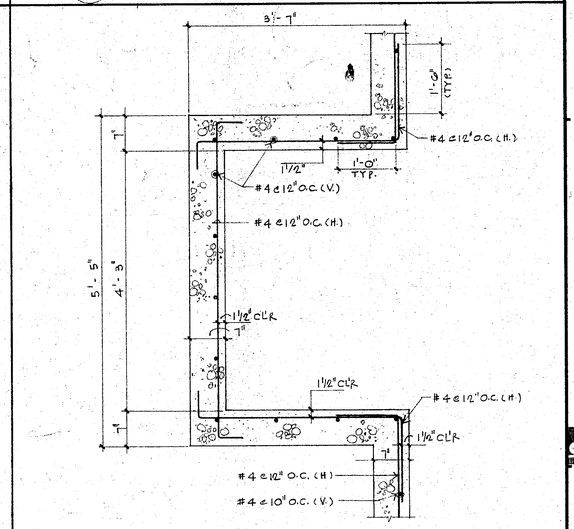

5 / S-9 SECTION
SCALE: 1" = 1'-0"

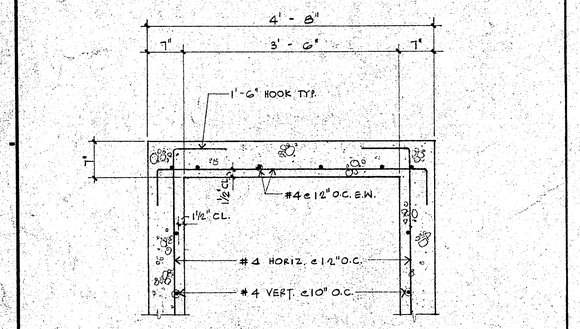

12 / S-9 SECTION
SCALE: 1" = 1'-0"

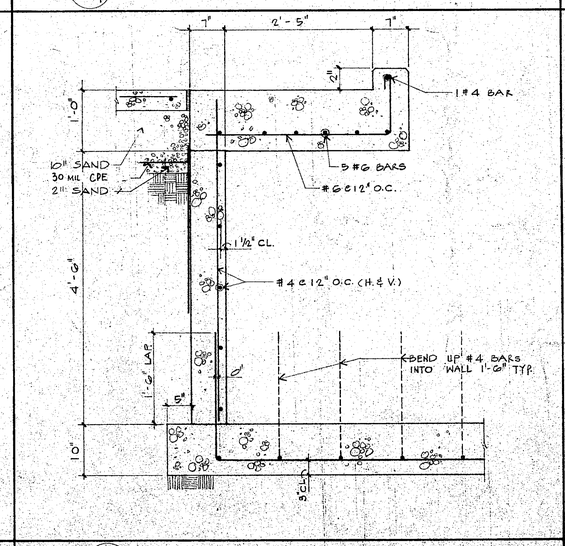

11 / S-9 SECTION
SCALE: 1" = 1'-0"

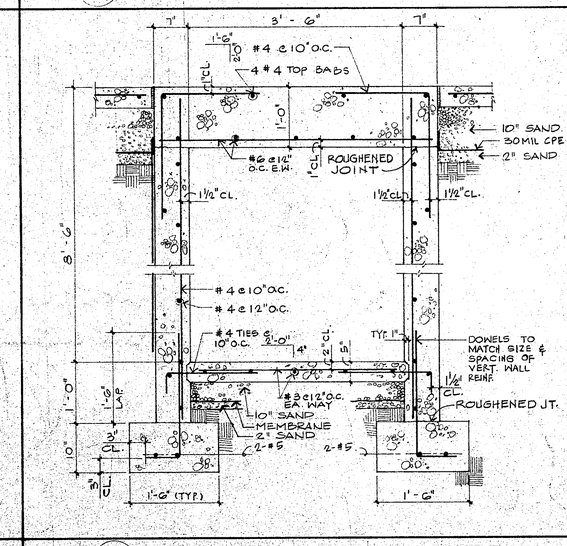

10 / S-9 SECTION
SCALE: 1" = 1'-0"

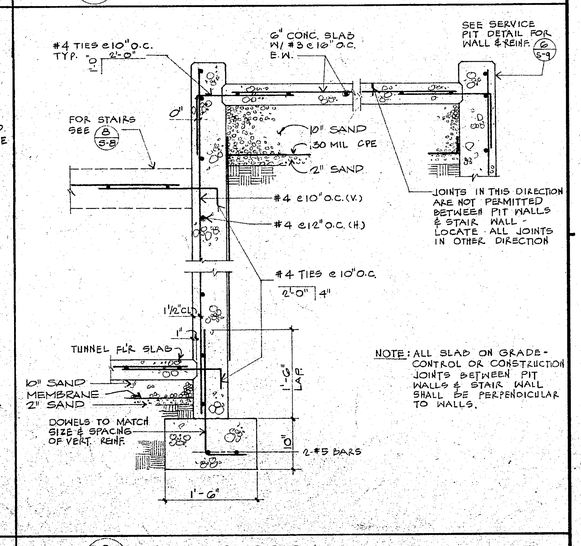

9 / S-9 SECTION
SCALE: 1" = 1'-0"

CYGNA CONSULTING ENGINEERS
330 Washington Street, Suite 309
Marina Del Rey, CA 90291
(213) 821-8144

REGISTERED PROFESSIONAL ENGINEER — STRUCTURAL — STATE OF CALIFORNIA

HUGH GIBBS & DONALD GIBBS
Architects F.A.I.A.
3575 Long Beach Boulevard, Long Beach, California

DRAWN JL	DATE 12-16-83
CHECKED WHF	JOB 1791

TORRANCE TRANSIT FACILITY

TORRANCE
CALIFORNIA

FEDERAL PROJECT No. CA-03-0208-01

UTILITY BLDG.
FOUNDATION & ROOF FRAMING PLANS & DETAILS

SHEET S - 9

TRANSIT BLDG

TORRANCE TRANSIT FACILITY

20500 MADRONA AVENUE
TORRANCE, CALIFORNIA

VICINITY MAP

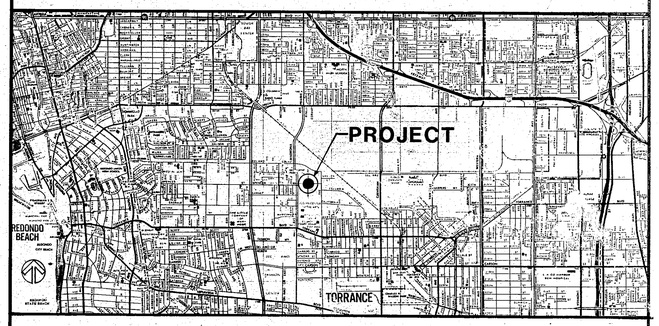

SYMBOLS

- DETAIL TITLE — DETAIL NUMBER / SHEET NUMBER ON WHICH DETAIL IS DRAWN
- DETAIL NUMBER / SHEET NUMBER ON WHICH DETAIL IS DRAWN
- SECTION NUMBER OR LETTER / SHEET NUMBER ON WHICH SECTION IS DRAWN
- SECTION LETTER OR NUMBER / SHEET NUMBER ON WHICH DETAIL IS DRAWN
- EQUIPMENT NUMBER / SEE SHEET A.3
- GRID NUMBER OR GRID LETTER
- ROOM NUMBER
- 0.00 TOP / 0.00 BOTTOM — FINISH GRADE DESIGNATIONS
- DOOR NUMBER
- REVISION NUMBER OR LETTER
- MATCH LINE, BUILDING LOCATION & FLOOR ELEVATIONS

ABBREVIATIONS

@	AT
ASPH CONC	ASPHALTIC CONCRETE
AC T	ACOUSTIC TILE
ADJ	ADJACENT
AC	AIR CONDITIONING
AL	ALUMINUM
AP	ACCESS PANEL
APT	APARTMENT
ASB	ASBESTOS
AVE	AVENUE
BATT	BATTEN
BTW	BETWEEN
BD	BOARD
BLDG	BUILDING
BLK	BLOCK
BLKG	BLOCKING
BM	BENCH MARK
BM	BEAM
BOT	BOTTOM
BRG	BEARING
BRKT	BRACKET
BSMT	BASEMENT
C	CENTERLINE
C TO C	CENTER TO CENTER
CAB	CABINET
CB	CATCH BASIN
CEM	CEMENT
CI	CAST IRON
CIP	CAST IN PLACE
CLG	CEILING
CLO	CLOSET
CLR	CLEAR
CLR OPNG	CLEAR OPENING
CO	CLEAN OUT
COL	COLUMN
CMPSN	COMPOSITION
CONC	CONCRETE
CONN	CONNECTION
CONSTR	CONSTRUCTION
CONT	CONTINUOUS
CONTR	CONTRACTOR
COR	CORNER
CORR	CORRIDOR
CTSK	COUNTERSINK
CT	CERAMIC TILE
CTR	COUNTER
CU FT	CUBIC FEET
CSWK	CASEWORK
CMU	CONCRETE MASONRY UNIT
d	PENNY
DN	DOWN
DBL	DOUBLE
DET	DETAIL
DEMO	DEMOLITION
DF	DRINKING FOUNTAIN
DIA	DIAMETER
DIM	DIMENSION
DR	DOOR
DS	DOWNSPOUT
DWG	DRAWING
EA	EACH
EXP JT	EXPANSION JOINT
EL	ELEVATION
ELEC	ELECTRIC
ELEV	ELEVATOR
ENCL	ENCLOSURE
ENGR	ENGINEER
ENTR	ENTRANCE
EQ	EQUAL
EQPT	EQUIPMENT
EXH	EXHAUST
EXIST	EXISTING
EXP	EXPOSED
EXT	EXTERIOR
EW	EACH WAY

FA	FIRE ALARM
FBGL	FIBERGLASS.
FD	FLOOR DRAIN
FDN	FOUNDATION
FE	FIRE EXTINGUISHER
FEC	FIRE EXTINGUISHER CABINET
FHC	FIRE HOSE CABINET
FHMS	FLAT HEAD MACHINE SCREW
FHWS	FLAT HEAD WOOD SCREW
FIN	FINISH
FIX	FIXTURE
FL	FLUSH
FL	FLOOR
FIN. GR.	FINISH GRADE
FC	FACE OF CONCRETE
FM	FACE OF MASONRY
FS	FACE OF STUDS
FPL	FIREPLACE
FPRF	FIREPROOF
FR	FRAME
FRG	FRAMING
FS	FLOOR SINK
FT	FOOT
FTG	FOOTING
FUR	FURNACE
FH	FIRE HYDRANT
GA	GAGE
GALV	GALVANIZED
GI	GALVANIZED IRON
GL	GLASS
GLU LAM	GLUE LAMINATED
GR	GRADE
GND	GROUND
GWB	GYPSUM WALL BOARD
HB	HOSE BIBB
HC	HOLLOW CORE
HD	HEAD
HDBD	HARDBOARD
HDR	HEADER
HDW	HARDWARE
HM	HOLLOW METAL
HORIZ	HORIZONTAL
HP	HORSEPOWER
HR	HOUR
HT	HEIGHT
HTR	HEATER
HDWD	HARDWOOD
ID	INSIDE DIMENSION
IN	INCH
INSUL	INSULATION
INTR	INTERIOR
J	JOIST
JT	JOINT
KAI	KALAMEIN
LAM	LAMINATED
LAV	LAVATORY
LB OR #	POUND
LIN FT	LINEAR FOOT
LINOL	LINOLEUM
LWT	LIGHT WEIGHT

MATL	MATERIAL
MAX	MAXIMUM
MC	MEDICINE CABINET
MECH	MECHANICAL
METL	METAL
MFR	MANUFACTURER
MIN	MINIMUM
MISC	MISCELLANEOUS
MLDG	MOULDING
MUL	MULLION
NIC	NOT IN CONTRACT
NO OR #	NUMBER
NTS	NOT TO SCALE
OB	OBSCURE
OC	ON CENTER
OD	OUTSIDE DIAMETER
OVHD	OVERHEAD
OPNG	OPENING
OPP	OPPOSITE
OZ	OUNCE
OH	OPPOSITE HAND
PTN	PARTITION
PL	PROPERTY LINE
PL	PLATE
PLAS	PLASTER
P LAM	PLASTIC LAMINATE
PLYWOD	PLYWOOD
PR	PAIR
PT	PRESSURE TREATED
POL	POLISHED
R	RADIUS
RB	RUBBER BASE
RD	ROOF DRAIN
RND	ROUND
RCPT	RECEPTACLE
REF	REFERENCE
REFR	REFRIGERATOR
RGTR	REGISTER
REINF	REINFORCING
REQD	REQUIRED
RESIL	RESILIENT
RH	ROUND HEAD
RM	ROOM
RO	ROUGH OPENING
R/W	RIGHT OF WAY
RWD	REDWOOD
SCHED	SCHEDULE
SECT	SECTION
SH	SHELF
SHT	SHEET
SHTHG	SHEATHING
SH	SHOWER
SIM	SIMILAR
SL	SLIDING
SQ	SQUARE
SS	SERVICE SINK
SST	STAINLESS STEEL
STAG	STAGGERED
STD	STANDARD
STL	STEEL
STOR	STORAGE
SC	SOLID CORE

TC	TOP OF CURB
TEL	TELEPHONE
TEMP	TEMPERED
TER	TERRAZZO
T & G	TONGUE & GROOVE
THK	THICKNESS
THRESH	THRESHOLD
TN	TOENAIL
TW	TOP OF WALL
TYP	TYPICAL
TOS	TOP OF SLAB
UTIL	UTILITY
VAT	VINYL ASBESTOS TILE
VCP	VITREOUS CLAY PIPE
VENT	VENTILATOR
VERT	VERTICAL
VOL	VOLUME
VT	VINYL TILE
VTR	VENT THRU ROOF
VOJ	VERIFY ON JOB
W/	WITH
WA	WAINSCOT
WRB	WARDROBE
WC	WATER CLOSET
WD	WOOD
WH	WATER HEATER
WI	WROUGHT IRON
WDO	WINDOW
WP	WATERPROOF
WSP	WEATHERSTRIP
WT	WEIGHT
WWF	WELDED WIRE FABRIC
YD	YARD

GENERAL NOTES

* AND 8218

1. THE SPECIFICATIONS, UNDER SEPARATE COVER, ARE AN INTEGRAL PART OF THESE CONTRACT DOCUMENTS.
2. THE SOILS REPORT, PREPARED BY WESTERN LABORATORIES, 13609 S. NORMANDIE AVE., GARDENA, CA 90249, THEIR WORK ORDER NO.* 8133, IS HEREBY INCORPORATED INTO THE CONTRACT DOCUMENTS. A COPY OF THIS REPORT AND SUPPLEMENT THERETO IS AVAILABLE FROM THE ARCHITECT OR THE SOILS ENGINEER.
3. THE TOPOGRAPHIC SURVEY OF CONDITIONS EXISTING ON 28 JUNE 1982, PREPARED BY ROSECRANS SURVEYS, 28215 AGOURA ROAD, AGOURA, CA 91301, THEIR JOB NO. TORRANCE NO. 259, IS HEREBY INCORPORATED INTO THE CONTRACT DOCUMENTS. ADDITIONAL SURVEY INFORMATION REGARDING UTILITIES, ROADWAYS, ETC., IS ON FILE AND AVAILABLE FOR INSPECTION AT THE OFFICE OF THE CITY ENGINEER, TORRANCE, CA.
4. VERIFY ALL DIMENSIONS AT SITE.
5. UNDER NO CIRCUMSTANCES SHALL A DIMENSION BE SCALED FROM THE DRAWINGS.
6. DIMENSIONS ARE GIVEN TO FACE OF CONCRETE, FACE OF STUDS & CENTERLINE OF STUDS AND COLUMNS UNLESS NOTED OR SHOWN OTHERWISE.
7. HEIGHT DIMENSIONS ARE GIVEN TO THE FINISH CONCRETE FLOOR LINE EXCLUSIVE OF FLOOR COVERING.
8. MATERIALS AND FINISHES LISTED IN INTERIOR FINISH SCHEDULE ARE FOR GENERAL INFORMATION AND CONVENIENCE OF CONTRACTOR. IN ADDITION TO MATERIALS AND FINISHES ENUMERATED, PROVIDE OTHER MATERIALS ACCESSORIES, OR FINISHES INDICATED OR SPECIFIED.
9. UNLESS OTHERWISE INDICATED, CLOSETS, SOFFITS, COLUMNS, PROJECTIONS OR RECESSES IN SCHEDULED SPACES SHALL HAVE FINISHES AS SCHEDULED FOR RESPECTIVE SPACE IN WHICH THEY OCCUR.
10. REFERENCING OF DRAWINGS FOR CONVENIENCE ONLY, AND DOES NOT LIMIT APPLICATION OF ANY DRAWING OR DETAIL.
11. GLASS DOORS, AND GLAZING WITHIN 4 FEET OF DOORS SHALL BE CERTIFIED TO MEET THE CPSC SAFETY STANDARDS FOR ARCHITECTURAL GLAZING MATERIALS.
12. REINFORCING STEEL, PILE FOUNDATIONS, CONCRETE FOOTINGS, AND CONCRETE BLOCK MASONRY SHALL BE INSPECTED BY A REGISTERED DEPUTY INSPECTOR.
13. ALL INTERIOR FINISH MATERIALS SHALL HAVE A FLAME SPREAD RATING OF 200 MAXIMUM EXCEPT EXIT PASSAGES OR LOBBIES WHICH SHALL BE 75.
14. TORRANCE TRANSIT FACILITY
    BUILDING TYPE V - 1 HR. (FIRE SPRINKLERED) OCCUPANCY DESIGNATION PER 1979 UBC B-2 (OFFICE BLDG.) AND H-4 (REPAIR GARAGE) SEISMIC ZONE 4.

    AREA OF BUILDING:

1st. FLOOR-REPAIR GARAGE	16,835 SQ. FT.
MEZZANINE STORAGE	2,020 SQ. FT.
1st. FLOOR SHOPS	6,525 SQ. FT.
2nd. FLOOR OFFICE AREA	7,600 SQ. FT.
TOTAL BUILDING AREA	32,980 SQ. FT.

	B-2 V - 1 HR.	H-4 V - 1 HR.
BASIC	14,000 SQ. FT.	8,800 SQ. FT.
2nd. FLOOR	14,000 SQ. FT.	8,800 SQ. FT.
ALLOWABLE	28,000 SQ. FT.	17,600 SQ. FT.
SIDE YARD	28,000 SQ. FT.	17,600 SQ. FT.
FIRE SPRINKLERS	56,000 SQ. FT.	35,200 SQ. FT.
TOTAL ALLOWABLE	112,000 SQ. FT.	70,400 SQ. FT.
*	x .43	x .57
	48,160	40,128

15. ROOF DECKS SHALL BE INSPECTED BEFORE ROOFING OR CANT STRIPS ARE APPLIED.
16. THIS BUILDING SHALL COMPLY WITH APPLICABLE REQUIREMENTS FOR BUILDING SECURITY.
17. THIS BUILDING SHALL CONFORM TO THE 1979 EDITION OF THE UNIFORM BUILDING CODE (UBC) AND APPLICABLE SECTIONS OF THE CURRENT EDITIONS OF THE CITY OF TORRANCE BUILDING CODES AND REGULATIONS. FIRE MARSHAL WILL USE SAME REFERENCES.
18. FIRE SPRINKLER PLAN FOR ALL BUILDINGS SHALL BE SUBMITTED TO THE STATE FIRE MARSHAL AND CITY OF TORRANCE FIRE MARSHAL FOR APPROVAL PRIOR TO FABRICATION AND INSTALLATION.
19. ALL PITS, EQUIPMENT PADS, FIXED BUILDING EQUIPMENT AND AUTOMOTIVE SERVICING EQUIPMENT SHALL BE INSTALLED STRICTLY IN ACCORDANCE WITH APPROVED MANUFACTURERS PUBLISHED MATERIAL AND SHOP DRAWINGS.
20. RELOCATE, HOOKUP AND INSTALL BUS WASHING EQUIPMENT TO BE PROVIDED BY CITY OF TORRANCE FROM EXISTING LOCATION ADJACENT TO SITE TO NEW LOCATION SHOWN ON THE DRAWINGS.

STATEMENT OF DESIGN COMPLIANCE

Divisions FIVE & SIX of the California Energy Conservation Standards for non-residential buildings in Title 24 of the California Administrative Code have been reviewed and the design described herein is in substantial conformance.

ENGINEER	CERT. NO.	DATE
	M-10826	9-2-83

REGISTERED PROFESSIONAL ENGINEER — LEONARD G. HATAKENAKA — No. M 10826 — MECHANICAL — STATE OF CALIFORNIA

SHEET INDEX

T.1	COVER SHEET
C.1	TYPICAL SITE DETAILS
C.2	FINISH GRADING PLAN
A.1	SITE PLAN & DETAILS
A.2	FUEL STATION PLANS, ELEVATIONS & DETAILS
A.3	FLOOR PLANS
A.4	EXTERIOR ELEVATIONS & DETAILS
A.5	BUILDING SECTIONS, WALL SECTIONS & DETAILS
A.6	ROOF PLAN & DETAILS
A.7	REFLECTED CEILING PLANS
A.8	INTERIOR FINISH SCHEDULE & DETAILS
A.9	DOOR SCHEDULE
A.10	DETAILS
A.11	ENLARGED PLANS & INTERIOR ELEVS.
A.12	INTERIOR ELEVATIONS
A.13	STAIR DETAILS & ELEVATOR DETAILS
A.14	MISCELLANEOUS DETAILS
A.15	MISCELLANEOUS DETAILS
S-1	FOUNDATION PLAN & DETAILS
S-2	SECOND FLOOR & ROOF FRAMING PLANS
S-3	FUEL STATION FOUNDATION & ROOF FRAMING PLANS & DETAILS
S-4	FRAME ELEVATION & DETAILS
S-5	SECTIONS & DETAILS
S-6	SECTIONS & DETAILS
S-7	SECTIONS & DETAILS
S-8	SECTIONS & GENERAL NOTES
S-9	UTILITY BLDG. FOUNDATION & ROOF FRAMING PLANS & DETAILS
M-1	SCHEDS, LEGEND & CONTROL DIAGRAM
M-2	FIRST AND SECOND FLOOR PLANS
M-3	ROOF PLAN AND SECTIONS
M-4	DETAILS
P-1	SCHEDULES AND LEGENDS
P-2	SITE PLAN
P-3	FIRST AND SECOND FLOOR PLANS
P-4	ROOF PLAN AND DETAILS
P-5	PARTIAL PLANS
P-6	DETAILS
E-1	SYMBOL LIST, GENERAL NOTES, EQUIPT SCHEDULE & LIGHTING FIXTURE SCHEDULE
E-2	SITE PLAN
E-3	SINGLE LINE DIAGRAM
E-4	FIRST AND SECOND FLOOR LIGHTING PLAN
E-5	FIRST AND SECOND FLOOR POWER & SIGNAL PLANS
E-6	ROOF PLAN & FUEL STATION DETAILS
E-7	LOAD SCHEDULES
E-8	DETAILS
LG-1	LANDFILL GAS COLLECTOR BUILDING PLAN & DETAILS

HUGH GI
DONALD
Architects FA.
3575 Long Beach Boulevard, Long Beach, Califom.

DRAWN PR	DATE 12-16-83
CHECKED	JOB 1791

TORRANCE TRANSIT FACILITY

TORRANCE CALIFORNIA

FEDERAL PROJECT NO. CA-03-0208-01

COVER SHEET, GENERAL NOTE, SHEET INDEX, VICINITY MAP

11/77A DIERICH-POST CLEARPRINT 1020