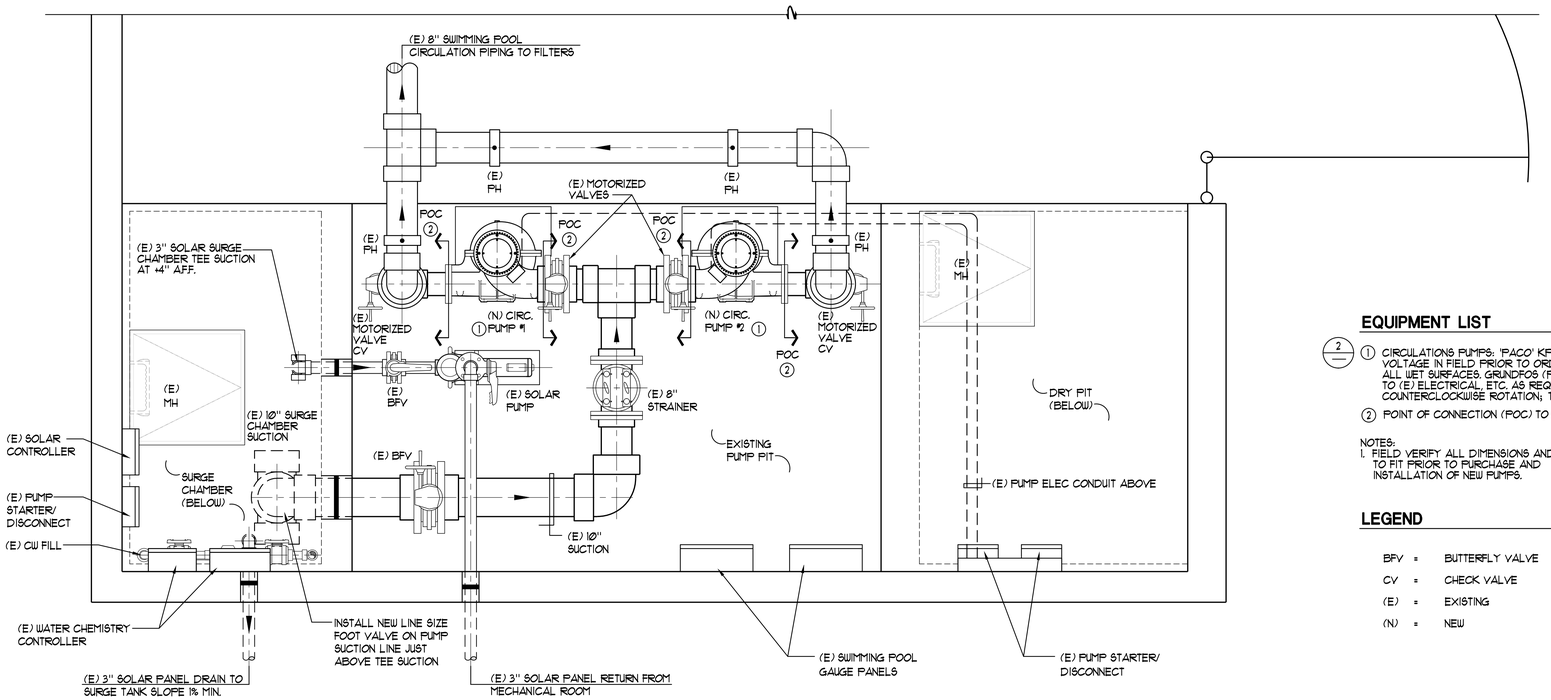

EQUIPMENT LIST

2

1. CIRCULATIONS PUMPS: 'PACO' KPV 60/15-3/4; 6"x8"x15"; 1150 RPM; 460V; 30HP (VERIFY VOLTAGE IN FIELD PRIOR TO ORDERING); RATED AT 1360 GPM @ 62FT TDH; EPOXY COAT ALL WET SURFACES. GRUNDFOS (PACO). PROVIDE PUMP PAD, MOUNTING, PIPING, HOOK-UP TO (E) ELECTRICAL, ETC. AS REQUIRED. ONE (1) CLOCKWISE AND ONE (1) COUNTERCLOCKWISE ROTATION; TWO (2) TOTAL. (1688 lbs.)
2. POINT OF CONNECTION (POC) TO EXISTING PIPING.

NOTES:
1. FIELD VERIFY ALL DIMENSIONS AND ABILITY TO FIT PRIOR TO PURCHASE AND INSTALLATION OF NEW PUMPS.

LEGEND

BFV	=	BUTTERFLY VALVE
CV	=	CHECK VALVE
(E)	=	EXISTING
(N)	=	NEW

1 **EXISTING MECHANICAL ROOM LAYOUT PLAN** ¾" = 1'-0"

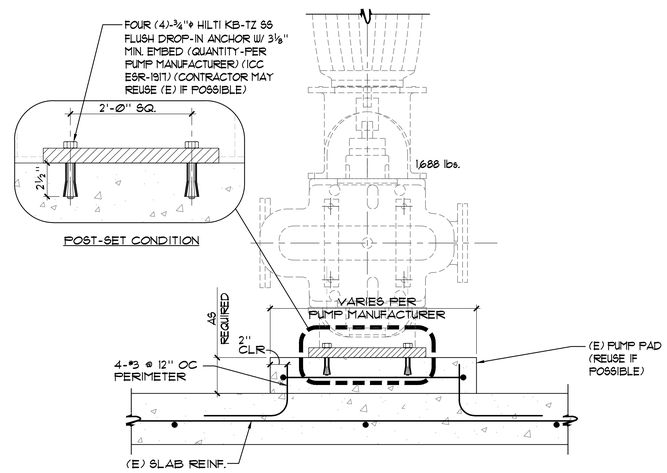

2 **PUMP ANCHORAGE** NO SCALE

AQUATIC DESIGN GROUP
2226 FARADAY AVE. CARLSBAD, CA 92008
Tel 760.438.8400 Fax 760.438.3251

LICENSED ARCHITECT FERRELL C-28220 REN. 12/31/13 STATE OF CALIFORNIA

These drawings and specifications are the property and copyright of Aquatic Design Group, Inc. and shall not be used on any other work except by agreement with Aquatic Design Group, Inc. Written dimensions shall take preference over scaled dimensions and shall be verified on the job site. Any discrepancy shall be brought to the notice of Aquatic Design Group, Inc. prior to the commencement of any work.

NO.	DATE	REVISION

DRAWING TITLE: MECHANICAL ROOM LAYOUT PLAN

JOB TITLE: BENSTEAD PLUNGE CIRCULATION PUMP REPLACEMENT

JOB ADDRESS: 3331 TORRANCE BLVD. TORRANCE, CA 90503

DATE: 10/10/12
SCALE: AS NOTED
DRAWN BY: GSF

DRAWING NO.:
MR-1