ITEM	DESCRIPTION
1	KUPFERLE TRUFLO MODEL TF550 BLOW-OFF HYDRANT W/2" FIP INLET
2	2" ADAPTOR – 2" MIP x SJ
3	2" COPPER TYPE K-SOFT TUBING
4	2" FIP BALL VALVE-FORD B11-777NL, JONES E1900 OR CB# 202NL-F7F7
5	2" BRASS STREET ELBOW
6	VALVE BOX ASSEMBLY (SEE T712) MOD.
7	2" BRASS NIPPLE AS REQUIRED
8	CONC. THRUST BLOCK PER T713
9	4" BLIND FLANGE W/FULL FACE GASKET W/2" IP DRILLED & TAPPED HOLE
10	2" 90° ELBOW – COPPER TO COPPER SJxSJ

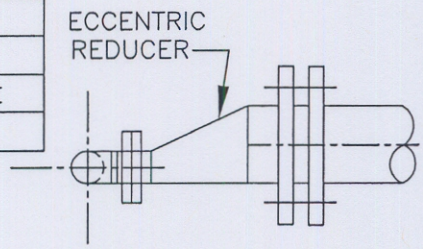

VIEW A

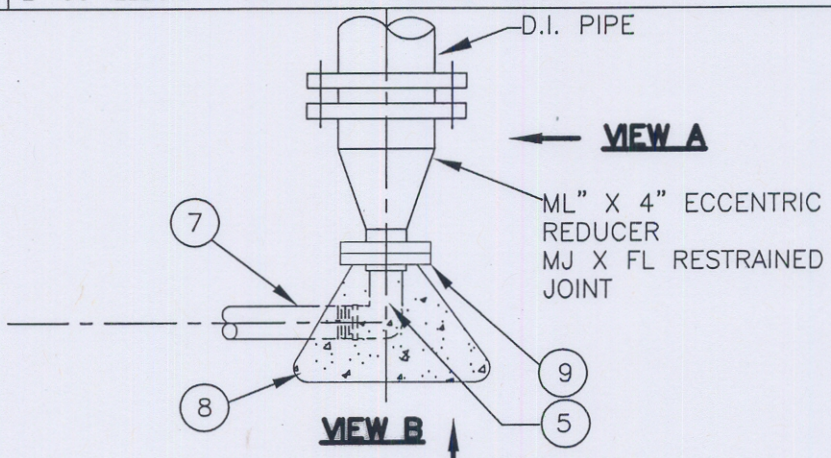

VIEW B
PLAN

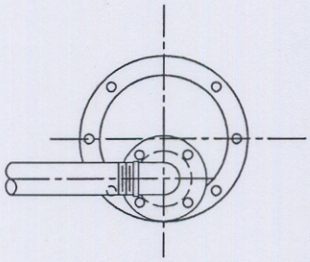

VIEW B

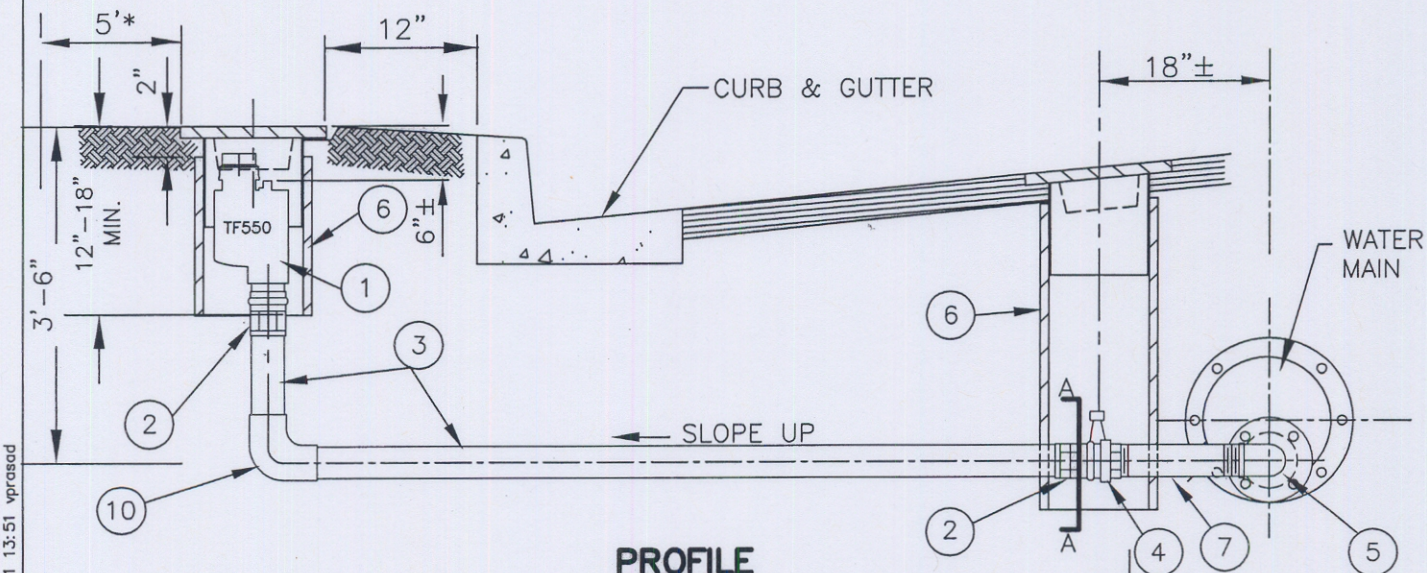

PROFILE

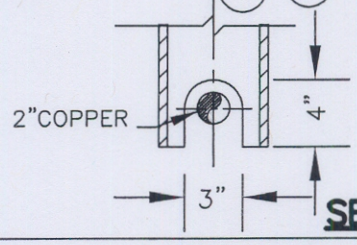

SECTION A–A

* WHERE THERE IS NO CURB, THE VALVE BOX ASSEMBLY SHALL BE SET 5' CLEAR OF PROPERTY LINE.

ACCOMPANYING STD'S T700, T701, T712, T713 AND T116

CITY OF TORRANCE

DATE ISSUED	2" BLOW-OFF ASSEMBLY	STANDARD NO.
JAN 2011	ROBERT J. BESTE PUBLIC WORKS DIRECTOR R.C.E. NO. 50737	T 707
		SHEET 1 OF 1

X:\ENG\VPrasad\Water Standards\T707.dwg 2/08/11 13:51 vprasad