A. GENERAL NOTES

1. All work shall comply with the 2010 edition of the CBC, and all other code requirements of local or state agencies having jurisdiction over this project.

2. All drawings are considered to be a part of the Contract Documents. The Contractor shall be responsible for the review and coordination of all drawings prior to the start of construction. Any discrepancies that occur shall be brought to the attention of the Architect prior to start of construction, so that a clarification can be issued. Any work performed in conflict with the Contract Documents or any code requirements shall be corrected by the Contractor at his own expense and at no expense to the Owner or Architect or Engineer.

3. All symbols and abbreviations used on the drawings are considered to be construction standards. If clarification is required, the Contractor shall notify Engineer prior to proceeding with the work.

4. DO NOT SCALE DRAWINGS! All dimensions and the site conditions shall be verified by the Contractor at the job site prior to bid submit, start of construction and / or fabrication of materials. If discrepancies are encountered, the Engineer shall be notified for clarification.

5. Printed dimensions have precedence over scaled drawings and large scale over small.

6. Typical details shall apply in general construction unless specifically detailed. Where no details are given, construction shall be as shown for similar work.

7. The contract Documents represent the finished structure. They do not indicate the method of construction. The Contractor shall provide all measure necessary to protect the structure and the safety of workmen during construction. Such measures shall include but not be limited to bracing, shoring for loads due to construction equipment, etc.

8. At trenches or excavations five feet or more in depth into which a person is required to decent, the Contractor shall obtain the necessary permit from the State of California Division of Industrial Safety prior to issuance of a building permit.

9. Refer to architectural, electrical, mechanical, and other consultant's drawings for details, conditions, pits, trenches, depressions, roof and floor openings, sleeve, items to be embedded or attached to structural elements, etc., not shown on structural drawings.

10. Contractors responsible for the construction of wind and seismic force resisting system/component listed in the "Statement of Special Inspection" shall submit a written statement of responsibility to the LADBS Inpsectors and the owner prior to the commencement of work on such system or component.

B. DESIGN PARAMETERS:

1. SEISMIC DESIGN PARAMETERS:
   Site Class ..... = D
   Occupancy Category IV
   Seismic Design Category D
   Component Importance Factor: Ip = 1.5

   Fire Station #1:
   Latitude..... = 34.83134
   Longitude..... = -118.32844
   SDs ..... = 1.197
   SD1 ..... = 0.749

   Fire Station #2:
   Latitude..... = 33.74653
   Longitude..... = -118.33762
   SDs ..... = 1.408
   SD1 ..... = 0.873

   Fire Station #3:
   Latitude..... = 33.86601
   Longitude..... = -118.33330
   SDs ..... = 1.012
   SD1 ..... = 0.610

2. WIND DESIGN PARAMETERS:

   Wind Speed V = 85 mph (3-second gust)
   Exposure Category "B"
   Iw = 1.15

C. STRUCTURAL STEEL

1. Structural steel shall conform to ASTM 572, Grade 50 specifications and to the AISC specifications for fabrication and erection.

2. Tube columns shall conform to ASTM A500, grade B specifications.

3. Pipe columns shall conform to ASTM A53, grade B specifications.

4. Bolts shall conform to ASTM A307 specifications except where shown "H.S.B."

5. High Strength Bolts, "H.S.B.", shall conform to ASTM A-325 specifications.

6. All bolts used as a part of seismic force resisting system shall be fully tensioned high strength bolts, "H.S.B."

7. Holes for bolts shall not be more than 1/16" larger than the bolt diameter.

8. The seismic design, fabrication, and erection of structural steel shall be in accordance with Part I (LRFD) and Part III (ASD) of the Seismic Provisions for Structural Steel Buildings dated April 15, 1997 and supplement #2 dated November 10, 2000 published by the American Institute of Steel Construction (AISC). These provisions shall be applied in conjunction with Chapter 22, Division II.

9. All structural steel shall be fabricated in the shop of a fabricator licensed by the City Of Torrance Building Department and shop drawings shall be submitted to the Structural Engineer for approval prior to fabrications.

10. Welding shall be performed in accordance with A Welding Procedure Specification (WPS) as required in AWS D1.1-2002 and approved by the Engineer of Record.

11. Shop welds must be performed in the City of Torrance licensed fabricator's shop.

12. All welding shall conform to the specifications of the American Welding Society and shall be performed by The City of Torrance Building Department certified welders using the electric arc process.

13. All complete penetration shop welding, all field welding and high strength bolting, except minor or tack welding, is to be done by welders certified by The City of Torrance Building Department and is to be continuously inspected by an approved The City deputy inspector.

14. All complete penetration welds shall be prepared with a 45 degree bevel.

15. All complete joint penetration groove welds used in the Seismic Force Resisting System shall be made with a filler metal that has a minimum CVN toughness of 20 ft-lbs at minus 20 degrees F.

16. Discontinuities in weld created by errors or by fabrication or erection operations, such as tack welds, erection aids, air-arc gouging and flame cutting, shall be repaired as required by the Engineer of Record.

17. All structural steel to be exposed to weather shall be hot dipped galvanized after fabrication. Field welding galvanized metal shall be touched up with galvaloy after welding.

18. All structural steel shall have a coat of shop primer except where steel is to be fireproofed or encased in concrete. All exterior steel exposed to weather shall be hot dipped galvanized after fabrication. Field welding galvanized metal shall have a coat of galvaloy after welding.

19. The specifications and Fabrication for steel frames shall comply with the Welding and Fabrication procedures per sheets S1.2 & S1.3.

20. Field welding to be done by welders must be certified by the city of Torrance Building Department for (structural steel, reinforcing steel, light gage steel).Continuous inspection by a deputy inspector is required.

D. INSPECTION:

1. Continuous inspection during construction by an approved registered deputy inspector shall be provided for:
   a) all reinforced concrete where required strength exceeds 2500 PSI at 28 days
   b) placement of anchor bolts
   c) placement of epoxy
   d) all field welding
   e) all complete penetration shop welds

Section Properties for Deep VERCOR™ or Deep VERCOR™ VENTLOK Decks

Deck Gage	Weight		Properties per ft of Width			Allowable Reactions per ft of Width (lb)				
	Galv	Painted	I	+S	-S	End Bearing			Interior Bearing	
	psf	psf	in^4	in^3	in^3	2"	3"	4"	3"	4"
26	1.1	--	0.073	0.099	0.103	499	579	647	838	926
24	1.4	--	0.098	0.138	0.14	813	939	1045	1382	1521
22	1.7	--	0.123	0.175	0.174	1200	1380	1532	2055	2254
20	2.1	--	0.143	0.207	0.206	1653	1893	2095	2845	3111

F_b = 36 ksi, F_y = 80 ksi
Reduce values by 6% for Deep VERCOR VENTLOK.
26 gage Deep VERCOR VENTLOK not available.

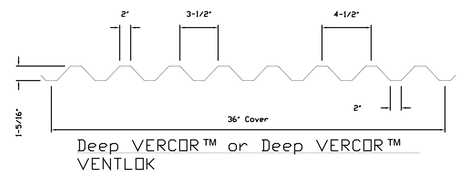

Deep VERCOR™ or Deep VERCOR™ VENTLOK

36/5 Pattern - Normal Position

SHEET INDEX

S-1 GENERAL NOTES

S-2 ROOF PLANS

S-3 ROOF PLAN, SECTIONS & DETAILS

REVISIONS	BY

ENA GROUP
10956 Balboa Blvd., Granada Hills, CA 91344
(818) 368-0544 Fax (818) 368-8703

REGISTERED PROFESSIONAL ENGINEER
AMIR H. GHAFARIAN
NO. 3901
EXP. 12-31-12
STRUCTURAL
STATE OF CALIFORNIA

SHEET TITLE: GENERAL NOTES

PROJECT: VARIOUS BUILDINGS' AIR CONDITIONING UNIT REPLACEMENT

OWNER: CITY OF TORRANCE
3031 TORRANCE BLVD TORRANCE, CA 90503

DRAWN	S.J.
CHECKED	A.G.
DATE	January 2012
SCALE	AS SHOWN
JOB NO.	11-113F
SHEET	S-1
OF	SHEETS

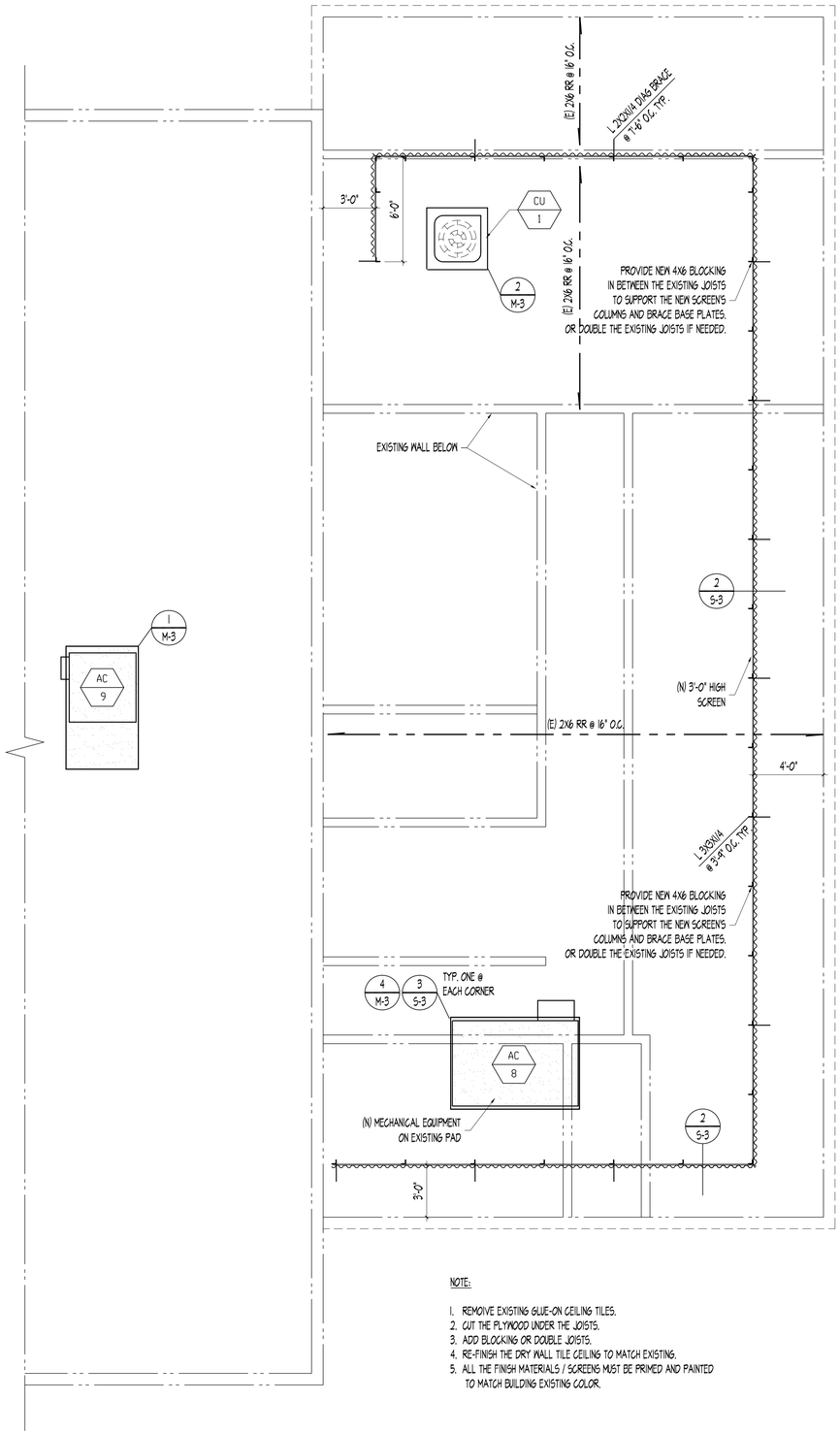

NOTE:

1. REMOVE EXISTING GLUE-ON CEILING TILES.
2. CUT THE PLYWOOD UNDER THE JOISTS.
3. ADD BLOCKING OR DOUBLE JOISTS.
4. RE-FINISH THE DRY WALL TILE CEILING TO MATCH EXISTING.
5. ALL THE FINISH MATERIALS / SCREENS MUST BE PRIMED AND PAINTED TO MATCH BUILDING EXISTING COLOR.

FIRE STATION #1 ROOF PLAN | 1/4" | 1

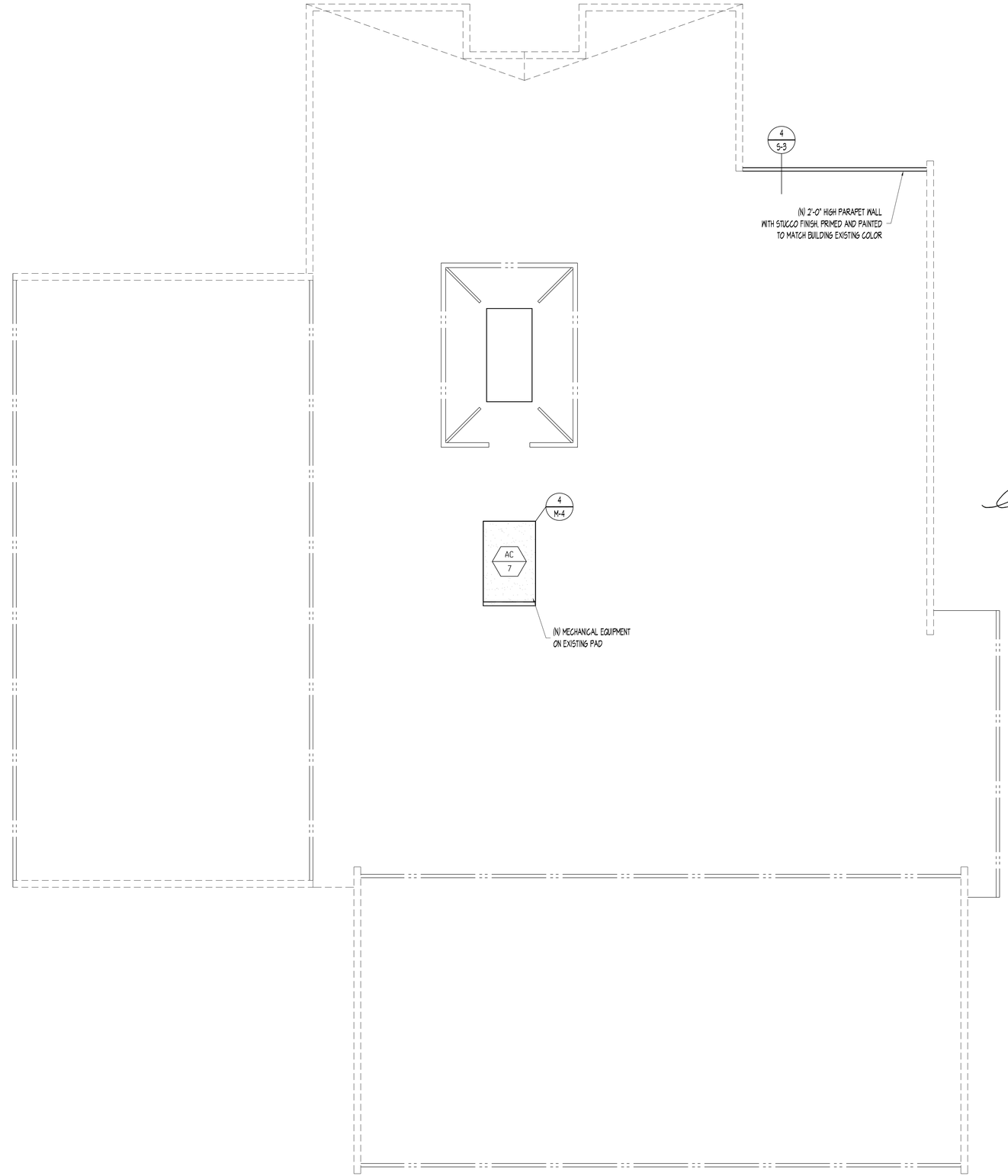

FIRE STATION #2 ROOF PLAN | 1/4" | 2

REVISIONS	BY

ENA GROUP
10956 Balboa Blvd., Granada Hills, CA 91344
(818) 368-0544 Fax (818) 368-8703

REGISTERED PROFESSIONAL ENGINEER
ARAM H. GHAZARIAN
No. 3801
EXP. 12-31-12
STRUCTURAL
STATE OF CALIFORNIA

SHEET TITLE: ROOF FRAMING PLANS

PROJECT: VARIOUS BUILDINGS' AIR CONDITIONING UNIT REPLACEMENT

OWNER: CITY OF TORRANCE
3031 TORRANCE BLVD TORRANCE, CA 90503

DRAWN	S.J.
CHECKED	A.G.
DATE	January 2012
SCALE	AS SHOWN
JOB NO.	11-113F
SHEET	S-2
OF	SHEETS

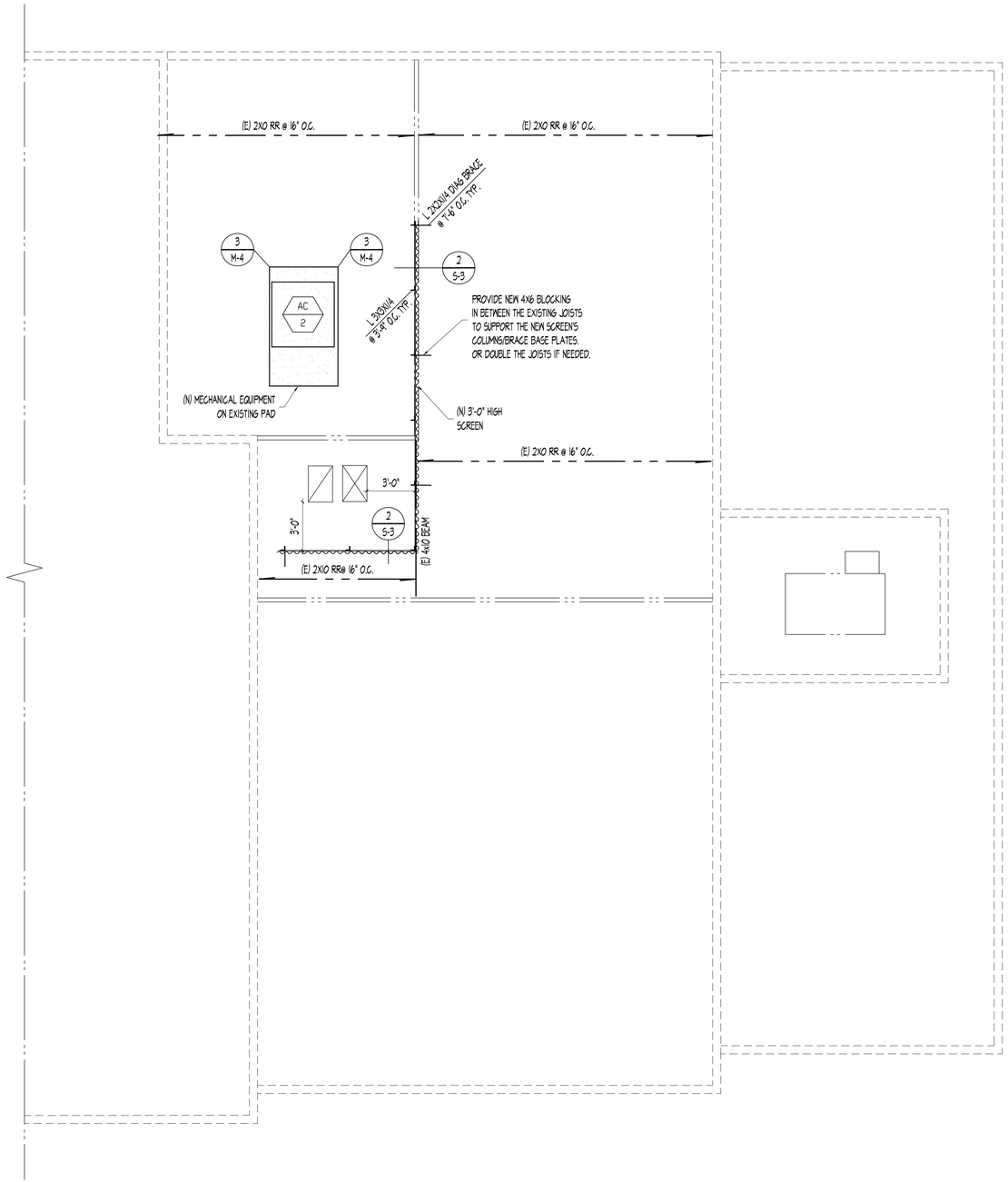

FIRE STATION #3 ROOF PLAN | 1/4" | 1

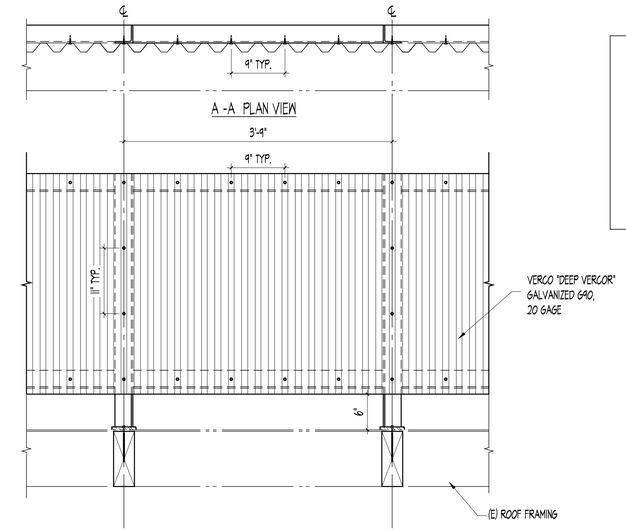

ELEVATION

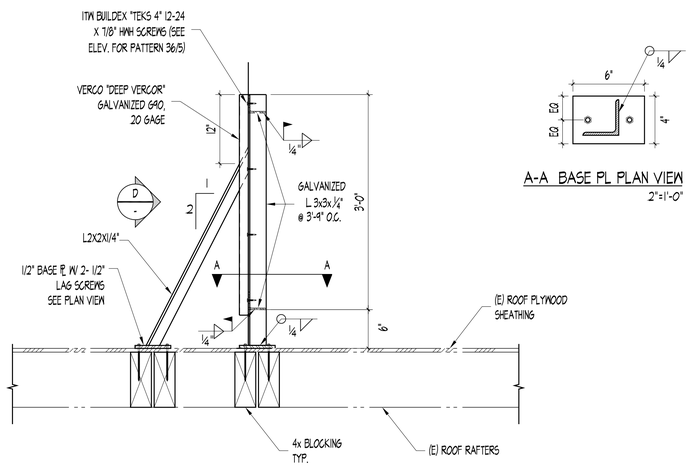

NOTE TO CONTRACTOR:

1. PLEASE MEASURE THE REQUIRED LENGTH OF THE SCREEN AT THE JOB SITE.
2. ALL SCREENS AND FINISH MATERIALS MUST BE PRIMED AND PAINTED.

NEW MECHANICAL SCREEN DETAIL | 1" | 2

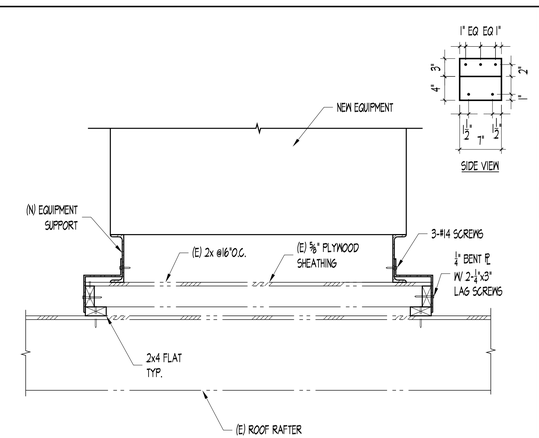

MECHANICAL EQUIPMENT ANCHORAGE DETAIL | 1" | 3

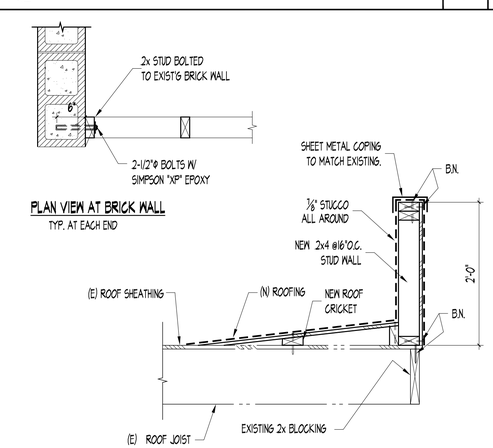

NEW PARAPET DETAIL | 1" | 4

REVISIONS	BY

ENA GROUP
10956 Balboa Blvd., Granada Hills, CA 91344
(818) 368-0544 Fax (818) 368-8703

REGISTERED PROFESSIONAL ENGINEER ARMINEH H. GHARIBANS NO. 3801 EXP. 12-31-12 STRUCTURAL STATE OF CALIFORNIA

SHEET TITLE: FIRE STATION #3 ROOF PLAN / SECTIONS AND DETAILS

PROJECT: VARIOUS BUILDINGS' AIR CONDITIONING UNIT REPLACEMENT

OWNER: CITY OF TORRANCE
3031 TORRANCE BLVD TORRANCE, CA 90503

DRAWN S.J.
CHECKED A.G.
DATE January 2012
SCALE AS SHOWN
JOB NO. 11-113F
SHEET S-3 OF SHEETS