PROPOSAL, SPECIFICATIONS, BOND AND AFFIDAVIT FOR THE CONSTRUCTION OF

STORMWATER BASIN ENHANCEMENT PROJECT
CIP No. I - 102

B2014-12

CRAIG BILEZERIAN
City Engineer

January 2014

TABLE OF CONTENTS

SECTION A - NOTICE INVITING BIDS

NOTICE INVITING BIDS A-1

SECTION B - INSTRUCTIONS TO BIDDERS

INSTRUCTIONS TO BIDDERS B-1

SECTION C - BID DOCUMENTS

BIDDER'S SUBMITTAL C-6

ACKNOWLEDGMENT OF ADDENDA RECEIVED C-15

CONTRACTOR'S AFFIDAVIT C-17

BID BOND C-19

LIST OF SUBCONTRACTORS C-20

REFERENCES C-22

VIOLATIONS OF FEDERAL, STATE OR LOCAL LAWS C-23

SECTION D - DOCUMENTS TO BE COMPLETED AND DELIVERED TO CITY PRIOR TO AWARD OF CONTRACT

PERFORMANCE BOND D-1

LABOR AND MATERIAL BOND D-3

PUBLIC WORKS AGREEMENT D-6

CONSTRUCTION OR SERVICE CONTRACT ENDORSEMENT D-17

WORKERS' COMPENSATION INSURANCE CERTIFICATION D-19

SECTION E - SPECIAL PROVISIONS

SECTION G - FEDERAL WAGE RATES FOR LOS ANGELES COUNTY

APPENDIX I: CITY OF TORRANCE PERMIT AND BUSINESS LICENSE
APPENDIX II: CITY OF TORRANCE STANDARD PLANS
APPENDIX III: STANDARD PLANS FOR PUBLIC WORKS CONSTRUCTION (SPPWC)
APPENDIX IV: CONSTRUCTION AND DEMOLITION DEBRIS RECYCLING SUMMARY
APPENDIX V: CALTRANS STANDARD PLANS

APPENDIX VI: WEST BASIN MUNICIPAL WATER DISTRICT STANDARD DRAWINGS
APPENDIX VII: COUNTY OF LOS ANGELES, PUBLIC HEALTH DEPARTMENT ENTRADERO STORMWATER BASIN RECYCLED WATER PROJECT APPROVAL CONDITIONS

SECTION A

NOTICE INVITING BIDS

CITY OF TORRANCE, CALIFORNIA

NOTICE INVITING BIDS

Notice is hereby given that sealed bids for performing the following described work will be received at the Office of the City Clerk of the City of Torrance, California, until **3 p.m. on Monday, March 3, 2014** after which time they will be publicly opened and read at 3:15 p.m. in the Council Chambers of said City:

CONSTRUCTION OF
Stormwater Basin Enhancement Project, CIP No. I-102

B2014-12

Plans, Bid Schedule and Specifications are available for viewing and printing by prospective bidders and subcontractors on the City's website at (http://www.torranceca.gov/3239.htm)

Those who only view and/or print the Plans, Bid Schedule and Specifications from the City's website will not be added to the City's Plan Holder list for this project.

The official Bidder's Submittal packet must be obtained from the Office of the City Clerk, City Hall, 3031 Torrance Boulevard, Torrance, California at (310) 618-2870. There is no cost if obtained at City Hall. A payment of $5 is required if requested by mail. The amount includes tax and is not refundable. A prospective bidder must provide to the City Clerk the firm's name, address, telephone and fax numbers, a contact person and a valid email address. This will ensure that your firm is listed as a "Plan Holder" and that you will be informed of any and all information issued subsequent to obtaining the official form of Proposal. Addenda will be issued only by email and only to those that provide the required information to the City Clerk. Receipt of any Addendum must be acknowledged by a bidder in its submitted form of Proposal. **If a bidder submits its Bidder's Submittal on forms other than the official Bidder's Submittal forms, the City may declare the bid as non-responsive**.

Full-size 24" x 36" Plans and a bound Specifications booklet may also be obtained at the same Office of the City Clerk, upon payment of **$200** if obtained at City Hall, or payment of **$250** if requested by mail. Both amounts include tax. Neither amount is refundable. The payment includes a copy of the official Bidder's Submittal packet. If requesting any item(s) by mail, please send check to the following:

CITY OF TORRANCE
OFFICE OF THE CITY CLERK
3031 TORRANCE BLVD
TORRANCE, CA 90509
ATTN: B2014-12

Notice of Mandatory Pre-Bid Conference

The pre-bid conference will start promptly at the time and location listed below. You must arrive on time and stay for the entire conference No Exceptions

Location:	City Yard, Public Works Large Conference Room 20500 Madrona Ave., Torrance CA 90503
Date:	Wednesday; February 19, 2014
Time:	2:00pm, Pacific Time

The Engineer's estimate of the contract total is **$4,000,000**. All work shall be completed within 188 working days from the date of the Notice to Proceed (NTP).

The Contractor shall provide reference for having completed at least one project that included the construction of riparian landscaping, i.e. landscaping to create a river, stream or wetland, of a minimum value of $200,000 for the riparian landscaping portion of the project.

Per Division 2, Chapter 2 of the Torrance Municipal Code, the Torrance City Council may reject any and all bids, waive any informality or irregularity in such bids, and determine the lowest responsible bidder. No facsimile bids shall be accepted by the City.

The DBE Contract goal is 4 percent. Section D4 "Disadvantaged Business Enterprises (DBE)" on page B-2 addresses the DBE requirements.

The City of Torrance hereby notifies all bidders that it will affirmatively ensure that in any contract entered into pursuant to this advertisement, underutilized disadvantaged business enterprises will be afforded full opportunity to submit bids in response to this invitation.

Substitution of securities for withheld funds is permitted per Section 22300 of the Public Contract Code.

The City has determined that a Class **A** Contractor's license is necessary to bid this project, but reserves the right to accept another Class at the sole discretion of either the Public Works Director or Engineer.

This project is using State and Federal funds and pursuant to Section 1770 et seq. of the California Labor Code, the minimum prevailing rate of per diem wages for each craft, classification, or type of workman needed to execute the Contract shall be those determined by the Director of Industrial Relations of the State of California. These wages are set forth in the General Prevailing Wage Rates for this project, available from the California Department of Industrial Relations' Internet web site at http://www.dir.ca.gov/DLSR/PWD.

The Federal minimum wage rates for this project, as predetermined by the United States Secretary of Labor, are set forth in the Bid book and in copies of this book that may be examined at the offices described above where project plans, special provisions, and bid forms may be seen. Addenda to modify the Federal minimum wage rates, if necessary, will be issued to holders of Bid book. Future effective general prevailing wage rates, which have been predetermined and are on file with the California Department of Industrial Relations are referenced but not printed in the general prevailing wage rates.

Attention is directed to the Federal minimum wage rate requirements in Section G of this Bid book. If there is a difference between the minimum wage rates predetermined by the Secretary of Labor and the general prevailing wage rates determined by the Director of the California Department of Industrial Relations for similar classifications of labor, the Contractor and subcontractors shall pay not less than the higher wage rate. The Department will not accept lower State wage rates not specifically included in the Federal minimum wage determinations. This includes "helper" (or other classifications based on hours of experience) or any other classification not appearing in the Federal wage determinations. Where Federal wage determinations do not contain the State wage rate determination otherwise available for use by the Contractor and subcontractors, the Contractor and subcontractors shall pay not less than the Federal minimum wage rate, which most closely approximates the duties of the employees in question.

The U.S. Department of Transportation (DOT) provides a toll-free “hotline” service to report bid rigging activities. Bid rigging activities can be reported Mondays through Fridays, between 8:00 a.m. and 5:00 p.m., Eastern Time, Telephone No. 1-800-424-9071. Anyone with knowledge of possible bid rigging, bidder collusion, or other fraudulent activities should use the “hotline” to report these activities. The “hotline” is part of the DOT’s continuing effort to identify and investigate highway construction contract fraud and abuse and is operated under the direction of the DOT Inspector General. All information will be treated confidentially and caller anonymity will be respected.

By order of the City Council of the City of Torrance, California.

For further information, please contact John Dettle, Engineering Manager in the Public Works Department at (310) 618-3059 or via the main office at (310) 781-6900.

SECTION B

INSTRUCTIONS TO BIDDERS

CITY OF TORRANCE, CALIFORNIA

INSTRUCTIONS TO BIDDERS

A. QUALIFICATION OF BIDDERS

1. Competency of Bidders

The Bidder shall be thoroughly competent and capable of satisfactorily performing the Work covered by the Bid. As specified in the Bid Documents, the Bidder shall furnish statements of previous experience on similar work. When requested, the Bidder shall also furnish the plan of procedure proposed; the organization, machinery, plant and other equipment available for the Work; evidence of its financial condition and resources; and any other such documentation as may be required by the City to determine if the Bidder is responsible.

2. Contractor's License

At the time of submitting the Bid, the Bidder shall be licensed as a contractor in accordance with the provisions of Chapter 9, Division 3, of the California Business and Professions Code. The required prime contractor license class for the Work is shown in the project Notice Inviting Bids. However, the City reserves the right to award the Contract to a contractor with another class if the City determines that the license is proper for the work.

B. BIDDER RESPONSIBILITY

A responsible Bidder is a Bidder who has demonstrated the attribute of trustworthiness, as well as ability, fitness, capacity and experience to satisfactorily perform the work.

Bidders are notified that, in accordance with Division 2, Chapter 2 of the Torrance Municipal Code, the City Council may determine whether the Bidder is responsible based on a review of the Bidder's performance on other contracts.

If, based on the provision and criteria in Division 2, Chapter 2 of the Torrance Municipal Code, the Public Works Director proposes not to recommend the award of contract to the apparent low bidder, the Director shall notify the Bidder in writing of its intention to recommend to the City Council that the Council award the contract to the 2nd lowest responsible bidder. If the Bidder presents evidence in rebuttal to the recommendation, the Director shall evaluate the merits of such evidence, and based on that evaluation, make a recommendation to the City Council.

C. ADDENDA TO THE CONTRACT DOCUMENTS

The City may issue Addenda to the Contract Documents during the period of advertising for any reason. The Bidder shall acknowledge the receipt of the Addenda in their Bid. Failure of the Bidder to do so may result in the rejection of the Bid as non-responsive.

D. PREPARATION OF THE BID

1. Examination of Site, Plans and Specifications

Prior to submitting a Bid, the Bidder shall examine the Plans and the Work site, carefully read the Specifications, and satisfy itself that it has the abilities and resources to complete the Work. The Bidder agrees that if it is awarded the Contract, no claim will be made against the City based on ignorance or misunderstanding of the provisions of the Contract Documents, the nature and amount of the work, and the physical and climatic conditions of the work site.

2. Estimated Quantities

The quantities shown in the Bid are approximate only. The Contractor will be paid for the actual quantities of work based on field measurements as provided for in these Specifications. The City reserves the right to increase or decrease the amount of any item or portion of work to be performed or materials furnished, or to delete any item, in accordance with the Specifications.

3. Bid Instructions and Submissions

The Bid shall be submitted on the Bidder's Submittal forms provided by the City Clerk. All Bid Documents listed below must be completed, executed and submitted with the Bid by the Bidder.

Required Bidder's Submittal Documents:

1) Bidder's Submittal
2) Addenda Acknowledgment Of Addenda Received
3) Contractor's Affidavit
4) Bid Bond (10%)
5) List of Subcontractors
6) References (2 pages)
7) Violations of Federal or State Law
8) Disqualification or Debarment
9) Notice to Bidders - Federal Requirements for Federal-Aid Projects
10) Equal Employment Opportunity Certification
11) Noncollusion Affidavit
12) Debarment and Suspension Certification
13) Nonlobbying Certification for Federal-Aid Contracts
14) Disclosure of Lobbying Activites

All prices submitted will be considered as including any and all sales or use taxes. For any individual bid item, in the case of a discrepancy between its unit price and total bid, the unit price shall always prevail.

4. Disadvantaged Business Enterprise (DBE) Requirements

This project is subject to Title 49 CFR 26.13(b). A bidder is referred to the requirements listed in Section C "Performance of DBE" on page C-35 of these Specifications. Publications requesting DBE participation for the project should be advertised for a minimum of 5 days.

E. BID BOND

The Bid must be accompanied by either cash, a certified or cashier's check or a surety bond (bid bond) payable to the City of Torrance. Bids must be submitted on the proposal forms furnished by the Public Works Department. The Bid Guaranty shall be in an amount equivalent to at least 10% of the Total Contract Bid Price.

F. NONRESPONSIVE BIDS AND BID REJECTION

1. A Bid in which any one (1) of the required sixteen (16) Bid proposal documents are not completed, executed and submitted may be considered non-responsive and be rejected.

2. A Bid in which the Contract Unit Prices are unbalanced, which is incomplete or which shows alteration of form or irregularities of any kind, or which contains any additions or conditional or alternate Bids that are not called for, may be considered non-responsive and be rejected.

G. AWARD OF CONTRACT

In accordance with Division 2, Chapter 2 of the Torrance Municipal Code, the City Council reserves the right to reject any and all bids received, to take all bids under advisement for a period not-to-exceed sixty (60) days after date of opening thereof, to waive any informality or irregularity in the Bid, and to be the sole judge of the merits of material included in the respective bids received.

No less than two (2) weeks prior to the anticipated City Council meeting awarding a contract as a result of the Notice Inviting Bids, the City will notify all vendors that submitted a bid of the intention to award.

City of Torrance Bid/RFP Protest Procedures: The City of Torrance Bid/RFP Protest Procedures may be found on the City of Torrance website at:
http://www.torranceca.gov/PDF/Bid_RFP_Protest_Procedures.pdf

H. EXECUTION OF CONTRACT

After the Contract is awarded, the awardee shall execute the following eight (8) documents:

1) Performance Bond (100% of Bid)
2) Labor and Material Bond (100% of Bid)
3) Contract - Public Works Agreement
4) Verification of Insurance Coverage (Certificates and Endorsements)
5) Construction or Service Contract Endorsement
6) Workers' Compensation Insurance Certificate
7) Construction Permit Application Form
8) Business License Application Form

I. APPRENTICESHIP EMPLOYMENT STANDARDS

The Contractor is directed to the provisions in Sections 1776, 1777.5 and 1777.6 of the California Labor Code concerning the employment of apprentices by the contractor or any subcontractor under them.

J. PERMITS, LICENSES AND PUBLIC WORKS AGREEMENT

The Contractor shall procure and execute all permits, licenses, pay all charges and fees, and give all notices necessary and incidental to the completion of the Work. The Contractor shall execute a Public Works Agreement. No fee is charged for a Construction-Excavation Permit issued by the City of Torrance for a public works project. The Contractor shall obtain a City of Torrance Business License.

K. INSURANCE

The Contractor shall maintain Automobile Liability, General Liability and Workers' Compensation Insurance as specified in the Public Works Agreement included in the Project Specifications.

L. PRE-BID INQUIRIES

A Bidder with a Pre-Bid Inquiry must submit their question(s) in writing to the Torrance Public Works Department. Any and all questions must be emailed to John Dettle, Engineering Manager at jdettle@torranceca.gov. Please list "Stormwater Basin Enhancement Project, CIP No. I-102" in the subject line of the email.

All questions must be received no later than 5:00 p.m. on the Monday, February 24, 2014 one week prior to the date for opening the bids. Questions received after this date may not be considered. For questions of a general nature, a bidder may call John Dettle directly at (310) 618-3059.

SECTION C

BID DOCUMENTS

BIDDER'S SUBMITTAL

Company: _____ Total Bid: _____

PROPOSAL, SPECIFICATIONS, BOND AND AFFIDAVIT FOR THE CONSTRUCTION OF Stormwater Basin Enhancement Project, CIP No. I-102

B2014-12

Honorable Mayor and Members
of the Torrance City Council
Torrance, California

Members of the Council:

In accordance with the Notice Inviting Bids pertaining to the receiving of sealed proposals by the City Clerk of the City of Torrance for the above titled improvement, the undersigned hereby proposes to furnish all Work to be performed in accordance with the Plans, Specifications, Standard Drawings, and the Contract Documents, for the unit price or lump sum set forth in the following schedule.

Optional maintenance costs will not be part of this contract. Depending on available funding, the City may award a separate 3 year maintenance contract for all 3 basins directly to listed low bid vendor.

BID SCHEDULE

GENERAL CONSTRUCTION COSTS					
ITEM NO.	APPROX. QUANTITY	UNIT OF MEASURE	ITEM	UNIT PRICE	TOTAL BID
			MISCELLANEOUS		
1	1	LS	MOBILIZATION (10% MAX. OF CONTRACT BID)		
2	1	LS	RECONSTRUCTION OF LOCAL DEPRESSION FOR CATCH BASIN ARS	$10,000	$10,000
3	1	LS	TRAFFIC CONTROL AND PLANS		
4	4	WEEK	SCREENER ("SIFTER") RENTAL TO OBTAIN CMB FROM BISHOP BASIN		
			SUB-TOTAL:		
			GENERAL SUB-TOTAL:		_____

AMIE BASIN CONSTRUCTION COSTS					
ITEM NO.	APPROX. QUANTITY	UNIT OF MEASURE	ITEM	UNIT PRICE	TOTAL BID
			MISCELLANEOUS		
5	1	EA	PROJECT CONSTRUCTION SIGN		
6	1	LS	SHORING OF OPEN EXCAVATIONS FOR PROTECTION OF LIFE AND LIMB		
7	380	LF	EPOXY INJECTION OF CRACKS		
8	324	EA	STREET SWEEPING SIGNS		
9	139	EA	STREET SWEEPING SIGN POSTS		
			SITE DEMOLITION		
10	260	TON	SITE DEMO AND HAUL AWAY		
11	1	LS	CLEARING AND GRUBBING		
12	130	CY	RIPRAP REMOVAL		
13	290	SF	SAWCUT EXISTING CONCRETE; CUT, CAP, AND REMOVE UTILITIES		
14			**OMITTED**	Ø	Ø
15			**OMITTED**	Ø	Ø
			ACCESS ROAD CONSTRUCTION		
16	70	CY	CRUSHED AGGREGATE BASE (CMB)		
17	50	CY	4" AC (OVER 4" CMB)		
			GRADING		
18	2,860	CY	EXCAVATION		
19	9,240	CY	FILL		
20	6,380	CY	SOIL IMPORT (SEE BID ITEMS 86 AND 170)		
			DRAINAGE IMPROVEMENTS		
21	1	EA	3' AUTOMATIC RETRACTABLE SCREENS (ARS)	$341	$341
22	32	EA	3.5' ARS	$341	$10,912
23	14	EA	7' ARS	$682	$9,548
24	6	EA	10' ARS	$682	$4,092
25	8	EA	14' ARS	$1,023	$8,184
26	2	EA	28' ARS	$2,046	$4,092
27	5	EA	2'x3'FLO-GARD AREA DRAIN INSERTS		
28			**OMITTED**	Ø	Ø
29	1,100	LF	10" DIP FORCE MAIN		
30	550	LF	14" DIP FORCE MAIN		
31			**OMITTED**	Ø	Ø
32			**OMITTED**	Ø	Ø
33	1	LS	WATER QUALITY MONITORING STATION		
34	2	EA	3/4" DIRECT ACTING PRESSURE REDUCING VALVES		
35	80	CY	RIPRAP (1/4 TON)		
36	110	SY	DEMO AND REPLACE EXISTING V-DITCH		
37			**OMITTED**	Ø	Ø
38	1	LS	DEWATERING AND BY-PASS SYSTEM		
39	1	LS	SHORING OF OPEN EXCAVATIONS FOR PROTECTION OF LIFE AND LIMB FORCE MAIN CONSTRUCTION		
40	160	SY	FILTER FABRIC		

AMIE BASIN PUMP STATION					
41	1	LS	IRRIGATION PUMP STATION INCLUDING VAULTS & CONTROLLER		
42			**OMITTED**	Ø	Ø
43			**OMITTED**	Ø	Ø
44			**OMITTED**	Ø	Ø
45	6	EA	PULL BOXES		
46			**OMITTED**	Ø	Ø
47			**OMITTED**	Ø	Ø
48	1,500	LF	1-1/4" CONDUIT AND SUPPORTS AND WIRING		
49			**OMITTED**	Ø	Ø
50	1	LS	GROUNDING		
51			**OMITTED**	Ø	Ø
52			**OMITTED**	Ø	Ø
53			**OMITTED**	Ø	Ø
54			**OMITTED**	Ø	Ø
55			**OMITTED**	Ø	Ø
56			**OMITTED**	Ø	Ø
57			**OMITTED**	Ø	Ø
58			**OMITTED**	Ø	Ø
59			**OMITTED**	Ø	Ø
60			**OMITTED**	Ø	Ø
61			**OMITTED**	Ø	Ø
62			**OMITTED**	Ø	Ø
63			**OMITTED**	Ø	Ø
LANDSCAPING					
64	50,140	SF	IRRIGATION		
65	78,990	SF	HYDROSEED		
66	3	EA	15 GALLON TREE (DOUBLE STAKED WD-ALT 2)		
67	7	EA	5 GALLON TREE		
68	12,100	EA	SHRUB LINERS		
69	1,370	EA	ROSEPOT		
70			**OMITTED**	Ø	Ø
71	86,890	SF	90 DAY PLANT MAINTENANCE		

AMIE SUB-TOTAL: _____

OPTIONAL AMIE BASIN MAINTENANCE COSTS					
ITEM NO.	**APPROX. QUANTITY**	**UNIT OF MEASURE**	**ITEM**	**UNIT PRICE**	**TOTAL BID**
72	86,890	SF	3 YEAR LANDSCAPE MAINTENANCE		

Landscape Maintenance Vendor Contact Information:

_____

_____

_____

_____

ENTRADERO BASIN CONSTRUCTION COSTS

ITEM NO.	APPROX. QUANTITY	UNIT OF MEASURE	ITEM	UNIT PRICE	TOTAL BID
			MISCELLANEOUS		
73	3	EA	INTERPRETATIVE SIGN		
74	2	EA	PROJECT CONSTRUCTION SIGNS		
75	827	EA	STREET SWEEPING SIGNS		
76	804	EA	STREET SWEEPING SIGN POSTS		
			SITE DEMOLITION		
77	1	LS	CLEARING AND GRUBBING		
78	5	TON	SITE DEMO AND HAUL AWAY		
79	1,005	LF	REMOVE EXISTING CHAIN LINK FENCE		
80	15,090	SF	CRUSH AND REUSE AC DEBRIS	-	-
81	15	LF	SAWCUT AND REMOVE 8' OF EXISTING CURB		
			TRAIL CONSTRUCTION		
82	5,800	SF	3 1/2" PCC (OVER 4" CMB)		
83	400	CY	CRUSHED MISCELLANEOUS BASE (CMB)		
84	200	LF	METAL HAND RAILS		
85	1	LS	WOODEN FABRICATED BRIDGE		
86	4,440	CY	EXCAVATION (SEE BID ITEM 20)		
87	4,410	CY	FILL		
88			**OMITTED**	Ø	Ø
89	1	EA	CONCRETE STEPS (COLORED)		
90	230	LF	6" CURB PER SPPWC STD. 120-2 TYPE A1-6		
91	17	EA	4" REMOVABLE BOLLARDS - MODEL ABP4040		
92	920	SF	KEYSTONE WALL PER WALL FACE SQUARE FOOT		
			DRAINAGE IMPROVEMENTS		
93	2	EA	2.5' AUTOMATIC RETRACTABLE SCREENS (ARS)	$341	$682
94	9	EA	3.5' ARS	$341	$3,069
95	1	EA	3.75' ARS	$341	$341
96	1	EA	4' ARS	$341	$341
97	1	EA	4.5' ARS	$341	$341
98	3	EA	5' ARS	$341	$1,023
99	23	EA	7' ARS	$682	$15,686
100	1	EA	14' ARS	$1,023	$1,023
101	3	EA	21' ARS	$1,364	$4,092
102	1	EA	28' ARS	$2,046	$2,046
103	2	EA	2'x3' FLO-GARD AREA DRAIN INSERT		
104			**OMITTED**	Ø	Ø
105	12	LF	48" HDPE CORRUGATED DOUBLE WALL PIPE		
106	37	LF	42" HDPE CORRUGATED DOUBLE WALL PIPE		
107	1	EA	TRENCH GRATE COVER		
108	1	LS	REINFORCED CONCRETE 5'(S) X 3' (H) DOUBLE BOX CULVERT PER CALTRANS STD. D81 & WING WALLS		
109	22	LF	10" PVC SLEEVE		
110	5	CY	RIPRAP (1/4 TON)		
111	2	EA	OUTLET STRUCTURE		
112	50	CY	SHOTCRETE WEIRS (COLORED)		

113	1	EA	48" CONCRETE COLLAR PER SPPWC STD. 380-4		
114	1	EA	42" CONCRETE COLLAR PER SPPWC STD. 380-4		
115	60	SY	FILTER FABRIC		
			LIGHTING		
116	17	EA	LIGHT FIXTURES, INCLUDING CONNECTION		
117			**OMITTED**	Ø	Ø
118	1	LS	DEMOLITION OF EXISTING LIGHT FIXTURES AND POLES		
			LANDSCAPING		
119	180	LF	CONCRETE HEADER 6" X 6"		
120	171,090	SF	IRRIGATION		
121	76,620	SF	HYDROSEED		
122	49	EA	15 GALLON TREE (DOUBLE STAKED WD-ALT 2)		
123	61,110	SF	HYBRID BERMUDA W/ SOIL PREP./GRADING		
124	21,470	EA	SHRUB LINERS		
125	4	EA	WOOD BENCH		
126	5	EA	TRASH RECEPTACLES/DOG BAG STATIONS		
127	100	EA	DOGIPOT LITTER PICK UP BAG ROLL CASE		
128	4	EA	SPLIT RAIL FENCE		
129	4	EA	TRAIL SIGN		
130	1,180	SY	EARTHEN CHANNEL - VEGETATED FLEX-A-MAT		
131	1	LS	VEGETATED SWALE		
132	175,170	SF	90 DAY PLANT MAINTENANCE		
			FENCING		
133	1,005	LF	REPLACE CHAIN LINK FENCE		
134	-	-	REMOVE AND REPLACE EXISTING CHAIN LINK FENCE AT BALL FIELD WITH (OPTION A OR B)	-	-
134A	510	LF	□ OPTION A: REPLACE WITH 8' CHAIN LINK FENCE		
134B	510	LF	□ OPTION B: REPLACE WITH 12' CHAIN LINK FENCE		
135	1	LS	RHINO GATE		
136	1	LS	6' WIDE GATE		
			RECYCLED WATER RETROFIT		
137	840	LF	FURNISH AND INSTALL 1 INCH COPPER POTABLE PIPE		
138	1,630	LF	FURNISH AND INSTALL 2 INCH COPPER POTABLE PIPE		
139	6	EA	FURNISH AND INSTALL POTABLE QUICK COUPLER		
140	2	EA	FURNISH AND INSTALL 1 INCH REDUCED PRESSURE ASSEMBLY		
141	2	EA	FURNISH AND INSTALL 2 INCH REDUCED PRESSURE ASSEMBLY		
142	2	EA	FURNISH AND INSTALL 2 INCH REDUCED PRESSURE ASSEMBLY WITH PROTECTIVE ENCLOSURE		
143	6	EA	CONNECT TO EXISTING POTABLE SERVICE		
144	1	EA	FURNISH AND INSTALL 1 INCH RECYCLED SUB-METER		
145	2	EA	FURNISH AND INSTALL 2 INCH RECYCLED SUB-METER		
146	1	EA	FURNISH AND INSTALL 3 INCH RECYCLED SUB-METER		
147	1	EA	FURNISH AND INSTALL 2 INCH POTABLE SUB-METER		
148	4	EA	CONNECT TO EXISTING IRRIGATION MAIN AND RESTORE TURF		

149	50	LF	FURNISH AND INSTALL 1 INCH PURPLE PVC RECYCLED PIPE AND RESTORE TURF		
150	600	LF	FURNISH AND INSTALL 2 INCH PURPLE PVC RECYCLED PIPE AND RESTORE TURF		
151	100	LF	FURNISH AND INSTALL 3 INCH PURPLE PVC RECYCLED PIPE AND RESTORE TURF		
152	1	EA	FURNISH AND INSTALL 4 INCH PRESSURE REDUCING VALVE ASSEMBLY WITH STRAINER AND PROTECTIVE ENCLOSURE		
153	13	EA	FURNISH AND INSTALL RECYCLED WATER SIGNS (12"x18")		
154	28	EA	FURNISH AND INSTALL RECYCLED WATER SIGNS (4"X8")		
155	4	EA	REMOVE AND CAP EXISTING POTABLE QUICK COUPLER OR HOSE BIB		
156	3	EA	FURNISH AND INSTALL HOSE BIB VACUUM BREAKERS ON POTABLE SYSTEM		
157	1	LS	REMOVE EXISTING IRRIGATION METER VAULT AT PARK AND CONNECT NEW 3 INCH SUB-METER TO EXISTING IRRIGATION, BACKFILL AND COMPACT, RESTORE TURF		
158	1	LS	FURNISH AND INSTALL RECYCLED WATER IDENTIFICATION TAGS ON ALL IRRIGATION VALVES		

ENTRADERO BASIN SUB-TOTAL W/ FENCE OPT 134 A _____

ENTRADERO BASIN SUB-TOTAL W/ FENCE OPT 134 B _____

OPTIONAL ENTRADERO MAINTENANCE COSTS					
ITEM NO.	**APPROX. QUANTITY**	**UNIT OF MEASURE**	**ITEM**	**UNIT PRICE**	**TOTAL BID**
MAINTENANCE					
159	175,170	SF	3 YEAR PLANT MAINTENANCE		

HENRIETTA BASIN CONSTRUCTION COSTS					
ITEM NO.	APPROX. QUANTITY	UNIT OF MEASURE	ITEM	UNIT PRICE	TOTAL BID
			MISCELLANEOUS		
160	2	EA	PROJECT CONSTRUCTION SIGNS		
161	1	EA	INTERPRETIVE SIGN		
162	1	LS	SHORING OF OPEN EXCAVATIONS FOR PROTECTION OF LIFE AND LIMB		
163	736	EA	STREET SWEEPING SIGNS		
164	604	EA	STREET SWEEPING SIGN POSTS		
			SITE DEMOLITION		
165	20	TON	SITE DEMO AND HAUL AWAY		
166	1	LS	CLEARING AND GRUBBING		
167	446	LF	REMOVE EXISTING CHAIN LINK FENCE		
			TRAIL CONSTRUCTION		
168	190	CY	CRUSHED AGGREGATE BASE (CMB)		
169	40	LF	SAWCUT AND REMOVE EXISTING BLOCK WALL FOR VIEWING		
170	8,470	CY	EXCAVATION (SEE BID ITEM 20)		
171	2,930	CY	FILL		
172	3	EA	CONCRETE STEPS (COLORED)		
173			**OMITTED**	Ø	Ø
174	478	LF	MASONRY RETAINING WALL PER SPPWC 618-3		
175	290	SF	REINFORCED CONC. RETAINING WALL PER SPPWC 615-4		
			DRAINAGE IMPROVEMENTS		
176	15	EA	3.5' AUTOMATIC RETRACTABLE SCREENS (ARS)	$341	$5,115
177	1	EA	4' ARS	$341	$341
178	21	EA	7' ARS	$682	$14,322
179	10	EA	10' ARS	$682	$6,820
180	19	EA	14' ARS	$1,023	$19.437
181	5	EA	21' ARS	$1,364	$6,820
182	4	EA	28' ARS	$2,046	$8,184
183	11	EA	2'x3' FLO-GARD AREA DRAIN INSERT		
184			**OMITTED**	Ø	Ø
185	20	CY	RIPRAP (1/4 TON)		
186	3	EA	OUTLET STRUCTURE		
187	130	CY	SHOTCRETE WEIRS (COLORED)		
188	1	EA	GRATED TRASH RACK		
189	100	SY	FILTER FABRIC		
			ELECTRICAL/MECHANICAL		
190	1	LS	1 ½" PVC SCH. 40 CONDUIT AND WIRING		
191			**OMITTED**	Ø	Ø
192	1	LS	CONNECTION TO UTILITY POWER LINE		
193	1	LS	GROUNDING		
194	1	EA	IRRIGATION PUMP		
195	1	EA	2 INCH SHUTOFF VALVE		

196	1	EA	2 INCH CHECK VALVE		
197	1	LS	PIPING		
198	1	LS	ANCHORAGE		
199			**OMITTED**	Ø	Ø
200			**OMITTED**	Ø	Ø
201	1	EA	METER-LOAD CENTER		
202	1	LS	CONTROL PANEL AND CONCRETE PAD		
203			**OMITTED**	Ø	Ø
			LANDSCAPING		
204	240	LF	CONCRETE HEADER 6" X 6"		
205	92,450	SF	IRRIGATION		
206	52,250	SF	HYDROSEED		
207	44	EA	15 GALLON TREE (DOUBLE STAKED WD-ALT 2)		
208	11,130	EA	1 GALLON SHRUB		
209	12,530	EA	SHRUB LINERS		
210			**OMITTED**	Ø	Ø
211	14	EA	OUTDOOR CLASSROOM BENCHES		
212	2	EA	TREE REMOVAL (6" DIAMETER)		
213	2	EA	TREE REMOVAL (8" DIAMETER)		
214	25	EA	TREE REMOVAL (12" DIAMETER)		
215	6	EA	TREE REMOVAL (24" DIAMETER)		
216	123,990	SF	90 DAY PLANT MAINTENANCE		
			FENCING		
217	60	LF	WROUGHT IRON FENCE		
218	20	LF	CHAIN LINK FENCE		
219	1	LS	10' DOUBLE LEAF DRIVE GATE		
220	1	EA	5' WALK GATE PER SWPPC STD. 600-3		

HENRIETTA SUB-TOTAL: _____

OPTIONAL HENRIETTA BASIN MAINTENANCE COSTS

ITEM NO.	APPROX. QUANTITY	UNIT OF MEASURE	ITEM	UNIT PRICE	TOTAL BID
			MAINTENANCE		
221	123,990	SF	3 YEAR LANDSCAPE MAINTENANCE		

ALL BASINS WITH FENCE OPTION 134A (WITHOUT 3 YEAR MAINTENANCE)

TOTAL BID PRICE $_____
(Figures)*

TOTAL BID PRICE: _____
(Words)*

_____

ALL BASINS WITH FENCE OPTION 134B (WITHOUT 3 YEAR MAINTENANCE)

TOTAL BID PRICE $_____
(Figures)*

TOTAL BID PRICE: _____
(Words)*

_____

*BID MAY BE REJECTED IF TOTAL IS NOT SHOWN IN FIGURES AND WORDS.

B2014-12

BIDDER'S SUBMITTAL (Continued) B2014-12

The undersigned furthermore agrees to enter into and execute a contract, with necessary bonds, at the unit prices set forth herein and in case of default in executing such contract, with necessary bonds, the check or bond accompanying this bid and the money payable thereon shall be forfeited thereby to and remain the property of the City of Torrance.

The above unit prices include all work appurtenant to the various items as outlined in the Specifications and all work or expense required for the satisfactory completion of said items. In case of discrepancies between unit prices and totals, the unit prices shall govern.

The undersigned declares that it has carefully examined the Plans, Specifications, and Contract Documents, and has investigated the site of the work and is familiar with the conditions thereon.

Contractor:_____

Date: _____ By:_____

Contractor's State License No. _____ Class_____

Address:_____

Phone: _____

Fax: _____

ACKNOWLEDGMENT OF ADDENDA RECEIVED – B2014-12

The Bidder shall acknowledge the receipt of addenda by placing an "X" by each addendum received.

Addendum No. 1 ____

Addendum No. 2 ____

Addendum No. 3 ____

Addendum No. 4 ____

Addendum No. 5 ____

Addendum No. 6 ____

Addendum No. 7 ____

Addendum No. 8 ____

If an addendum or addenda have been issued by the City and not noted above as being received by the Bidder, the Bid Proposal may be rejected.

_____ _____

Bidder's Signature Date

CONTRACTOR'S AFFIDAVIT

STATE OF CALIFORNIA }
}
COUNTY OF _____} **B2014-12**

_____, being first duly sworn, deposes and says:

1. That he is the

_____
Title

of _____
(Name of Partnership, Corporation, or Sole Proprietorship)

hereinafter called "Contractor," who has submitted to the City of Torrance a proposal for the Construction of Stormwater Basin Enhancement Project, CIP No. I-102, B2014-12;

2. That said proposal is genuine; that the same is not sham; that all statement of facts therein are true;

3. That such proposal was not made in the interest or behalf of any person, partnership, company, association, organization or corporation not named or disclosed;

4. That the Contractor did not, directly or indirectly, induce, solicit or agree with anyone else to submit a false or sham bid, to refrain from bidding, or to withdraw the bid, to raise or fix the bid price of the Contractor or anyone else, or to raise or fix any overhead, profit or cost element of the Contractor's price or the price of anyone else; and did not attempt to induce action prejudicial to the interest of the City of Torrance, or of any other bidder, or anyone else interested in the proposed contract;

5. That the Contractor has not in any manner sought by collusion to secure for itself an advantage over any other bidder or to induce action prejudicial to the interests of the City of Torrance, or of any other bidder or of anyone else interested in the proposed contract;

6. That the Contractor has not accepted any bid from any subcontractor or materialman through any bid depository, the bylaws, rules or regulations of which prohibit or prevent the Contractor from considering any bid from any subcontractor or materialman, which is not processed through said bid depository, or which prevent any subcontractor or materialman from bidding to any contractor who does not use the facilities of or accept bids from or through such bid depository;

7. That the Contractor did not, directly or indirectly, submit the Contractor's bid price or any breakdown thereof, or the contents thereof, or divulge information or data relative thereto, to any corporation, partnership, company, association, organization, bid depository, or to any member or agent thereof, or to any individual or group of Individuals, except to the City of Torrance, or to any person or persons who have a partnership or other financial interest with said Contractor in its business.

Dated this _____ day of _____, 20___.

Subscribed and Sworn to
before me this _____ day
of _____, 20___.

_____
(Contractor)

_____
(Title)

_____
Notary Public in and for said
County and State.
(Seal)

BID BOND (10%)
B2014-12

KNOW ALL MEN BY THESE PRESENTS: That we, _____

_____

as principal, and _____

as sureties, are held and firmly bound unto the City of Torrance, State of California, in the penal sum of _____ dollars ($_____), for the payment whereof we hereby bind ourselves, our successors, heirs, executors or administrators jointly and severally, firmly by these presents.

The condition of this obligation is such that, whereas the above bounded principal is about to file with and submit to the City of Torrance a bid or proposal for the performance of certain work as required in the City of Torrance, Bid No. B2014-12, said work being: the **Stormwater Basin Enhancement Project, CIP No. I-102**, and in compliance with the Specifications therefor under an invitation of said City contained in a notice or advertisement for bids or proposals; now if the bid or proposal of the said principal shall be accepted and if the said work be thereupon awarded to the principal by said City and if the said principal shall enter into a contract with the said City in accordance with said bid or proposal, or if the bid or proposal of the said principal is rejected, then this bond shall be void and of no effect and otherwise in full force and effect.

WITNESS our hands this _____ day of _____, 20___.

_____
Principal

_____
Surety/Attorney-in-Fact

_____
Signature

Name: _____
Local Address: _____
_____
Phone No.: _____
Fax No.: _____

LIST OF SUBCONTRACTORS
B2014-12

The Bidder is required to fill in the following blanks in accordance with the provisions of the California Public Contract Code Sections 4100-4114, CHAPTER 4. SUBLETTING AND SUBCONTRACTING. The contractor, sub recipient or subcontractor shall not discriminate on the basis of race, color, national origin, or sex in the performance of this contract. The contractor shall carry out applicable requirements of Title 49 CFR (Code of Federal Regulations) part 26 in the award and administration of US DOT assisted contracts. Failure by the contractor to carry out these requirements is a material breach of this contract, which may result in the termination of this contract or such other remedy, as the recipient deems appropriate. Each subcontract signed by the bidder must include this assurance.

Failure of the bidder to fulfill the requirements of the Special Provisions for submittals required to be furnished after bid opening, including but not limited to escrowed bid documents, where applicable, may subject the bidder to a determination of the bidder's responsibility in the event it is the apparent low bidder on a future public works contracts.

Name Under Which Subcontractor is Licensed: _____

Subcontractor's Address: _____

Specific Description of Sub-Contract: _____

License Number: _____ CA License Classification/Type: _____

Name Under Which Subcontractor is Licensed: _____

Subcontractor's Address: _____

Specific Description of Sub-Contract: _____

License Number: _____ CA License Classification/Type: _____

Name Under Which Subcontractor is Licensed: _____

Subcontractor's Address: _____

Specific Description of Sub-Contract: _____

License Number: _____ CA License Classification/Type: _____

Subcontractors listed must be properly licensed under the laws of the State of California for the type of work which they are to perform. Do not list alternate subcontractors for the same work.

REFERENCES (Page 1 of 2)
B2014-12

List work similar in magnitude and degree of difficulty completed by the Contractor within the past three (3) years.

1. Name (Firm/Agency): _____

   Address _____

   Contact Person: _____ Telephone No.: _____

   Title of Project: _____

   Project Location: _____

   Date of Completion: _____ Contract Amount: $ _____

2. Name (Firm/Agency): _____

   Address _____

   Contact Person: _____ Telephone No.: _____

   Title of Project: _____

   Project Location: _____

   Date of Completion: _____ Contract Amount: $ _____

3. Name (Firm/Agency): _____

   Address _____

   Contact Person: _____ Telephone No.: _____

   Title of Project: _____

   Project Location: _____

   Date of Completion: _____ Contract Amount: $ _____

4. Name (Firm/Agency): _____

   Address _____

   Contact Person: _____ Telephone No.: _____

   Title of Project: _____

   Project Location: _____

   Date of Completion: _____ Contract Amount: $ _____

REFERENCES (PAGE 2 OF 2)
B2014-12

If Contractor has not performed work for the City of Torrance within the last five (5) years, list all work done within said five years (attach additional sheets if necessary). Note if work was done as subcontractor [include only subcontract amount]:

Work Description & Contract Amount	Agency	Date Completed

Contractor's License No.: _____ Class: _____

a. Date first obtained: _____ Expiration: _____

b. Has License ever been suspended or revoked? _____

If yes, describe when and why: _____

c. Any current claims against License or Bond? _____

If yes, describe claims: _____

Principals in Company (List all – attach additional sheets if necessary):

NAME	TITLE (If Applicable)	LICENSE NO.
_____	_____	_____
_____	_____	_____
_____	_____	_____

VIOLATIONS OF FEDERAL, STATE OR LOCAL LAWS
B2014-12

1. Has your firm or its officers been assessed any penalties by an agency for noncompliance or violations of Federal, State or Local labor laws and/or business or licensing regulations within the past five (5) years relating to your construction projects?

   Yes/No: _____ Federal/State:_____

   If "yes," identify and describe, (including agency and status): _____

   _____

   _____

   _____

   Have the penalties been paid? Yes/No: _____

2. Does your firm or its officers have any ongoing investigations by any public agency regarding violations of the State Labor Code, California Business and Professions Code or State Licensing Laws?

   Yes/No: _____ Code/Laws: _____ Section/Article: _____

   If "yes," identify and describe, (including agency and status): _____

   _____

   _____

   _____

NOTICE TO BIDDERS
FEDERAL REQUIREMENTS

A bidder is required to submit the following forms with its Bid Proposal:

☐ Equal Employment Opportunity Certification (p. C-21)

☐ Noncollusion Affidavit (p. C-22)

☐ Debarment and Suspension Certification (p. C-23)

☐ Nonlobbying Certification for Federal-Aid Contracts (p. C-24)

The three (3) lowest, responsive bidders will be required to submit the following form to the City's Public Works Department and within 4 business days after the bid opening. The three (3) lowest, responsive bidders shall be determined by the City of Torrance at the Bid Opening.

☐ Exhibit 15-G Local Agency Bidder DBE Commitment (Construction Contracts) (p. C-29)

Note: *For Exhibit 15-G, a bidder is hereby notified by the City of Torrance that it must review EXHIBIT 10-I Notice to Proposers Disadvantaged Business Enterprise Information and be familiar with its requirements. The document can be downloaded from the Caltrans website at:* http://www.dot.ca.gov/hq/LocalPrograms/lam/forms/lapmforms.htm

Each bidder is required to submit written confirmation from each DBE stating that it is participating in the contract. Include that confirmation with the DBE Commitment form. A copy of a DBE's quote will serve as written confirmation that the DBE is participating in the contract.

If a bidder does not submit the DBE Commitment form and confirmation **within 4 business days after the bid opening**, the City of Torrance may determine your bid non-responsive.

If applicable, **the following form must be submitted with the bid:**

☐ Disclosure of Lobbying Activities (p. C-25)

If you are the successful bidder on this project, you will be requested to submit the following form to the City:

☐ DBE Information – "Good Faith Efforts," Exhibit 15-H (p. C-34)

The document can be downloaded from the Caltrans website at: http://www.dot.ca.gov/hq/LocalPrograms/lam/forms/lapmforms.htm

At the end of construction, the selected contractor will be required to submit the following forms to the City:

☐ Exhibit 17-F Final Report – Utilization of Disadvantaged Businesses

The document can be downloaded from the Caltrans website at:
http://www.dot.ca.gov/hq/LocalPrograms/lam/forms/lapmforms.htm

☐ Exhibit 17-O Disadvantaged Business Enterprises (DBE) Certification Status Change

The document can be downloaded from the Caltrans website at:
http://www.dot.ca.gov/hq/LocalPrograms/lam/forms/lapmforms.htm

THE BIDDER'S SIGNATURE ON THE BIDDER'S PROPOSAL SUBMITTED WITH ITS BID SHALL CONSTITUTE AN ENDORSEMENT AND EXECUTION OF THIS CERTIFICATION

EQUAL EMPLOYMENT OPPORTUNITY CERTIFICATION

The bidder _____, proposed subcontractor _____, hereby certifies that he has _____, has not _____, participated in a previous contract or subcontract subject to the equal opportunity clauses, as required by Executive Orders 10925, 11114, or 11246, and that, where required, he has filed with the Joint Reporting Committee, the Director of the Office of Federal Contract Compliance, a Federal Government contracting or administering agency, or the former President's Committee on Equal Employment Opportunity, all reports due under the applicable filling requirements.

Note: The above certification is required by the Equal Employment Opportunity Regulations of the Secretary of Labor (41 CFR 60-1.7(b) (1)), and must be submitted by bidders and proposed subcontractors only in connection with contracts and subcontracts, which are subject to the equal opportunity clause. Contracts and subcontracts which are exempt from the equal opportunity clause are set forth in 41 CFR 60-1.5. (Generally only contracts or subcontracts of $10,000 or under are exempt.)

Currently, Standard Form 100 (EEO-1) is the only report required by the Executive Orders or their implementing regulations.

Proposed prime CONTRACTORS and subcontractors who have participated in a previous contract or subcontract subject to the Executive Orders and have not filed the required reports should note that 41 CFR 60-1.7(b) (1) prevents the award of contracts and subcontracts unless such CONTRACTOR submits a report covering the delinquent period or such other period specified by the Federal Highway Administration or by the Director, Office of Federal Contract Compliance, U.S. Department of Labor.

Note: Providing false information may result in criminal prosecution or administrative sanctions

Exhibit 12-E, Attachment C

THE BIDDER'S SIGNATURE ON THE BIDDER'S PROPOSAL SUBMITTED WITH ITS BID SHALL CONSTITUTE AN ENDORSEMENT AND EXECUTION OF THIS CERTIFICATION

NONCOLLUSION AFFIDAVIT
(Title 23 United States Code Section 112 and
Public Contract Code Section 7106)

To the CITY of TORRANCE, DEPARTMENT OF PUBLIC WORKS.

In conformance with Title 23 United States Code Section 112 and Public Contract Code 7106 the bidder declares that the bid is not made in the interest of, or on behalf of, any undisclosed person, partnership, company, association, organization, or corporation; that the bid is genuine and not collusive or sham; that the bidder has not directly or indirectly induced or solicited any other bidder to put in a false or sham bid, and has not directly or indirectly colluded, conspired, connived, or agreed with any bidder or anyone else to put in a sham bid, or that anyone shall refrain from bidding; that the bidder has not in any manner, directly or indirectly, sought by agreement, communication, or conference with anyone to fix the bid price of the bidder or any other bidder, or to fix any overhead, profit, or cost element of the bid price, or of that of any other bidder, or to secure any advantage against the public body awarding the contract of anyone interested in the proposed contract; that all statements contained in the bid are true; and, further, that the bidder has not, directly or indirectly, submitted his or her bid price or any breakdown thereof, or the contents thereof, or divulged information or data relative thereto, or paid, and will not pay, any fee to any corporation, partnership, company association, organization, bid depository, or to any member or agent thereof to effectuate a collusive or sham bid.

Note: The above Noncollusion Affidavit is part of the Proposal. Signing this Proposal on the signature portion thereof shall also constitute signature of this Noncollusion Affidavit. Bidders are cautioned that making a false certification may subject the certifier to criminal prosecution.

Note: Providing false information may result in criminal prosecution or administrative sanctions

Exhibit 12-E, Attachment D

THE BIDDER'S SIGNATURE ON THE BIDDER'S PROPOSAL SUBMITTED WITH ITS BID SHALL CONSTITUTE AN ENDORSEMENT AND EXECUTION OF THIS CERTIFICATION

DEBARMENT AND SUSPENSION CERTIFICATION
(Title 49, Code of Federal Regulations, Part 29)

The bidder, under penalty of perjury, certifies that, except as noted below, he/she or any other person associated therewith in the capacity of owner, partner, director, officer, manager:

- is not currently under suspension, debarment, voluntary exclusion, or determination of ineligibility by any Federal AGENCY;
- has not been suspended, debarred, voluntarily excluded or determined ineligible by any Federal AGENCY within the past 3 years;
- does not have a proposed debarment pending; and
- has not been indicted, convicted, or had a civil judgment rendered against it by a court of competent jurisdiction in any matter involving fraud or official misconduct within the past 3 years.

If there are any exceptions to this certification, insert the exceptions in the following space.

Exceptions will not necessarily result in denial of award, but will be considered in determining bidder responsibility. For any exception noted above, indicate below to whom it applies, initiating AGENCY, and dates of action.

Note: Providing false information may result in criminal prosecution or administrative sanctions. The above certification is part of the Proposal. Signing this Proposal on the signature portion thereof shall also constitute signature of this Certification.

Exhibit 12-E, Attachment E

THE BIDDER'S SIGNATURE ON THE BIDDER'S PROPOSAL SUBMITTED WITH ITS BID SHALL CONSTITUTE AN ENDORSEMENT AND EXECUTION OF THIS CERTIFICATION

NON-LOBBYING CERTIFICATION FOR FEDERAL-AID CONTRACTS

The prospective participant certifies, by signing and submitting this bid or proposal, to the best of his or her knowledge and belief, that:

(1) No Federal appropriated funds have been paid or will be paid, by or on behalf of the undersigned, to any person for influencing or attempting to influence an officer or employee of any Federal AGENCY, a Member of Congress, an officer or employee of Congress, or an employee of a Member of Congress in connection with the awarding of any Federal contract, the making of any Federal grant, the making of any Federal loan, the entering into of any cooperative agreement, and the extension, continuation, renewal, amendment, or modification of any Federal contract, grant, loan, or cooperative agreement.

(2) If any funds other than Federal appropriated funds have been paid or will be paid to any person for influencing or attempting to influence an officer or employee of any Federal AGENCY, a Member of Congress, an officer or employee of Congress, or an employee of a Member of Congress in connection with this Federal contract, grant, loan, or cooperative agreement, the undersigned shall complete and submit Standard Form-LLL, "Disclosure of Lobbying Activities," in conformance with its instructions.

This certification is a material representation of fact upon which reliance was placed when this transaction was made or entered into. Submission of this certification is a prerequisite for making or entering into this transaction imposed by Section 1352, Title 31, U.S. Code. Any person who fails to file the required certification shall be subject to a civil penalty of not less than $10,000 and not more than $100,000 for each such failure.

The prospective participant also agrees by submitting his or her bid or proposal that he or she shall require that the language of this certification be included in all lower tier subcontracts, which exceed $100,000 and that all such subrecipients shall certify and disclose accordingly.

Note: Providing false information may result in criminal prosecution or administrative sanctions

Exhibit 12-E, Attachment F

DISCLOSURE OF LOBBYING ACTIVITIES

COMPLETE THIS FORM TO DISCLOSE LOBBYING ACTIVITIES PURSUANT TO 31 U.S.C. 1352

1. Type of Federal Action:
☐ a. contract
b. grant
c. cooperative agreement
d. loan
e. loan guarantee
f. loan insurance

2. Status of Federal Action:
☐ a. bid/offer/application
b. initial award
c. post-award

3. Report Type:
☐ a. initial
b. material change

For Material Change Only:
year quarter _____
date of last report _____

4. Name and Address of Reporting Entity

☐ Prime ☐ Subawardee
Tier , if known

Congressional District, if known

5. If Reporting Entity in No. 4 is Subawardee, Enter Name and Address of Prime:

Congressional District, if known

6. Federal Department/Agency:

7. Federal Program Name/Description:

CFDA Number, if applicable_____

8. Federal Action Number, if known:

9. Award Amount, if known:

10. a. Name and Address of Lobby Entity
(If individual, last name, first name, MI)

b. Individuals Performing Services (including address if different from No. 10a)
(last name, first name, MI)

(attach Continuation Sheet(s) if necessary)

11. Amount of Payment (check all that apply)

$_____ ☐ actual ☐ planned

12. Form of Payment (check all that apply):
☐ a. cash
☐ b. in-kind; specify: nature _____
value

13. Type of Payment (check all that apply)
☐ a. retainer
☐ b. one-time fee
☐ c. commission
☐ d. contingent fee
☐ e deferred
☐ f. other, specify _____

14. Brief Description of Services Performed or to be performed and Date(s) of Service, including officer(s), employee(s), or member(s) contacted, for Payment Indicated in Item 11:

(attach Continuation Sheet(s) if necessary)

15. Continuation Sheet(s) attached: **Yes** ☐ **No** ☐

16. Information requested through this form is authorized by Title 31 U.S.C. Section 1352. This disclosure of lobbying reliance was placed by the tier above when his transaction was made or entered into. This disclosure is required pursuant to 31 U.S.C. 1352. This information will be reported to Congress semiannually and will be available for public inspection. Any person who fails to file the required disclosure shall be subject to a civil penalty of not less than $10,000 and not more than $100,000 for each such failure.

Signature: _____

Print Name: _____

Title:

Telephone No.: _____ Date: _____

Federal Use Only:

Authorized for Local Reproduction
Standard Form - LLL

Standard Form LLL Rev. 09-12-97

Exhibit 12-E, Attachment G

INSTRUCTIONS FOR COMPLETION OF SF-LLL
DISCLOSURE OF LOBBYING ACTIVITIES

This disclosure form shall be completed by the reporting entity, whether subawardee or prime federal recipient, at the initiation or receipt of covered federal action or a material change to previous filing pursuant to title 31 U.S.C. Section 1352. The filing of a form is required for such payment or agreement to make payment to lobbying entity for influencing or attempting to influence an officer or employee of any agency, a Member of Congress an officer or employee of Congress or an employee of a Member of Congress in connection with a covered federal action. Attach a continuation sheet for additional information if the space on the form is inadequate. Complete all items that apply for both the initial filing and material change report. Refer to the implementing guidance published by the Office of Management and Budget for additional information.

1. Identify the type of covered federal action for which lobbying activity is and/or has been secured to influence, the outcome of a covered federal action.

2. Identify the status of the covered federal action.

3. Identify the appropriate classification of this report. If this is a follow-up report caused by a material change to the information previously reported, enter the year and quarter in which the change occurred. Enter the date of the last, previously submitted report by this reporting entity for this covered federal action.

4. Enter the full name, address, city, State and zip code of the reporting entity. Include Congressional District if known. Check the appropriate classification of the reporting entity that designates if it is or expects to be a prime or subaward recipient. Identify the tier of the subawardee, e.g., the first subawardee of the prime is the first tier. Subawards include but are not limited to subcontracts, subgrants and contract awards under grants.

5. If the organization filing the report in Item 4 checks "Subawardee" then enter the full name, address, city, State and zip code of the prime federal recipient. Include Congressional District, if known.

6. Enter the name of the federal agency making the award or loan commitment. Include at least one organization level below agency name, if known. For example, Department of Transportation, United States Coast Guard.

7. Enter the federal program name or description for the covered federal action (item 1). If known, enter the full Catalog of Federal Domestic Assistance (CFDA) number for grants, cooperative agreements, loans and loan commitments.

8. Enter the most appropriate federal identifying number available for the federal action identification in item 1 (e.g., Request for Proposal (RFP) number, Invitation for Bid (IFB) number, grant announcement number, the contract grant. or loan award number, the application/proposal control number assigned by the federal agency). Include prefixes, e.g., "RFP-DE-90-001."

9. For a covered federal action where there has been an award or loan commitment by the Federal agency, enter the federal amount of the award/loan commitments for the prime entity identified in item 4 or 5.

10. (a) Enter the full name, address, city, State and zip code of the lobbying entity engaged by the reporting entity identified in item 4 to influenced the covered federal action. (b) Enter the full names of the individual(s) performing services and include full address if different from 10 (a). Enter Last Name, First Name and Middle Initial (MI).

11. Enter the amount of compensation paid or reasonably expected to be paid by the reporting entity (item 4) to the lobbying entity (item 10). Indicate whether the payment has been made (actual) or will be made (planned). Check all boxes that apply. If this is a material change report, enter the cumulative amount of payment made or planned to be made.

12. Check the appropriate box(es). Check all boxes that apply. If payment is made through an in-kind contribution, specify the nature and value of the in-kind payment.

13. Check the appropriate box(es). Check all boxes that apply. If other, specify nature.

14. Provide a specific and detailed description of the services that the lobbyist has performed or will be expected to perform and the date(s) of any services rendered. Include all preparatory and related activity not just time spent in actual contact with federal officials. Identify the federal officer(s) or employee(s) contacted or the officer(s) employee(s) or Member(s) of Congress that were contacted.

15. Check whether or not a continuation sheet(s) is attached.

16. The certifying official shall sign and date the form, print his/her name title and telephone number.

Public reporting burden for this collection of information is estimated to average 30 minutes per response, including time for reviewing instruction, searching existing data sources, gathering and maintaining the data needed, and completing and reviewing the collection of information. Send comments regarding the burden estimate or any other aspect of this collection of information, including suggestions for reducing this burden, to the Office of Management and Budget, Paperwork Reduction Project (0348-0046), Washington, D.C. 20503.

SF-LLL-Instructions Rev. 06-04-90«ENDIF»

FEDERAL LOBBYING RESTRICTIONS

Section 1352, Title 1352, Title 31, United States Code prohibits Federal funds from being expended by the recipient or any lower tier subrecipient of a Federal-aid contract to pay for any person for influencing or attempting to influence a federal agency or ongress inconnection with the awarding of any federal-aid contract, the making of any federal grant or loan, or the entering into of any cooperative agreement.

If any funds other than federal funds have been paid for the same purposes in connection with this federal-aid contract, the recipient shall submit an executed certification and, if required, submit a completed disclosure form as part of the bid documents.

A certification for federal-aid contracts regarding payment of funds to lobby Congress or a federal agency is included in the Proposal. Standard Form - LLL, "Disclosure of Lobbying Activities," with instructions for completion of the Standard Form is also included in the Proposal. Signing the Proposal shall constitute signature of the Certification.

The above referenced certification and disclosure of lobbying activities shall be included in each subcontract and any lower-tier contracts exceeding $100,000. All disclosure forms, but not certifications, shall be forwarded from tier to tier until received by the Engineer.

The Contractor, subcontractors and any lower-tier contractors shall file a disclosure form at the end of each calendar quarter in which there occurs any event that requires disclosure or that materially affects the accuracy of the information contained in any disclosure form previously filed by the Contractor, subcontractors and any lower-tier contractors. An event that materially affects the accuracy of the information reported includes:

(1) A cumulative increase if $25,000 or more in the amount paid or expected to be paid for influencing or attempting to influence a covered federal action; or

(2) A change in the person(s) or individual(s) influencing or attempting to influence a covered federal action; or

(3) A change in the officer(s), employees(s), or Member(s) contacted to influence or attempt to influence a covered Federal Action.

Exhibit 15-G Local Agency Bidder DBE Commitment (Construction Contracts)

NOTE: PLEASE REFER TO INSTRUCTIONS ON THE REVERSE SIDE OF THIS FORM

LOCAL AGENCY: _____ LOCATION: _____

PROJECT DESCRIPTION: _____

TOTAL CONTRACT AMOUNT: $ _____

BID DATE: _____

BIDDER'S NAME: _____

CONTRACT DBE GOAL: _____

CONTRACT ITEM NO.	ITEM OF WORK AND DESCRIPTION OR SERVICES TO BE SUBCONTRACTED OR MATERIALS TO BE PROVIDED (or contracted if the bidder is a DBE)	DBE CERT NO. AND EXPIRATION DATE	NAME OF EACH DBE (Must be certified on the date bids are opened - include DBE address and phone number)	DOLLAR AMOUNT DBE

For Local Agency to Complete:

Local Agency Contract Number: _____

Federal-aid Project Number: _____

Federal Share: _____

Contract Award Date: _____

Local Agency certifies that all DBE certifications have been verified and information is complete and accurate.

_____ _____ _____

Print Name Signature Date

Local Agency Representative

(Area Code) Telephone Number: _____

Total Claimed DBE Participation

$_____

_____%

_____

Signature of Bidder

_____

Date (Area Code) Tel. No.

_____

Person to Contact (Please Type or Print)

Local Agency Bidder DBE Commitment (Construction Contracts)
(Rev 6/26/09)

Distribution: (1) Copy – Fax or scan a copy to the Caltrans District Local Assistance Engineer (DLAE) within 15 days of award. Failure to send a copy to the DLAE within 15 days of award may result in de-obligation of funds for this project.
(2) Copy -- Include in award package to Caltrans District Local Assistance
(3) Original – Local agency files

INSTRUCTIONS - LOCAL AGENCY BIDDER
DBE COMMITMENT (CONSTRUCTION CONTRACTS)

ALL BIDDERS:

PLEASE NOTE: This information may be submitted with your bid. If it is not, and you are the apparent low bidder or the second or third low bidder, it must submitted and received as specified in the Special Provisions. Failure to submit the required DBE commitment will be grounds for finding the bid nonresponsive

The form requires specific information regarding the construction contract: Local Agency, Location, Project Description, Total Contract Amount, Bid Date, Bidder's Name, and Contract DBE Goal.

The form has a column for the Contract Item Number and Item of Work and Description or Services to be Subcontracted or Materials to be provided by DBEs. Prime contractors shall indicate all work to be performed by DBEs including, if the prime is a DBE, work performed by its own forces, if a DBE. The DBE shall provide a certification number to the Contractor and expiration date. Enter the DBE prime's and subcontractors' certification numbers.The form has a column for the Names of DBE contractors to perform the work (who must be certified on the date bids are opened and include the DBE address and phone number).

IMPORTANT: Identify **all** DBE firms participating in the project regardless of tier. Names of the First-Tier DBE Subcontractors and their respective item(s) of work listed should be consistent, where applicable, with the names and items of work in the "List of Subcontractors" submitted with your bid.

There is a column for the DBE participation dollar amount. Enter the Total Claimed DBE Participation dollars and percentage amount of items of work submitted with your bid pursuant to the Special Provisions. (If 100% of item is not to be performed or furnished by the DBE, describe exact portion of time to be performed or furnished by the DBE.) See Section "Disadvantaged Business Enterprise (DBE)," of the Special Provisions (construction contracts), to determine how to count the participation of DBE firms.

Exhibit 15-G must be signed and dated by the person bidding. Also list a phone number in the space provided and print the name of the person to contact.

Local agencies should complete the Local Agency Contract Award, Federal-aid Project Number, Federal Share, Contract Award Date fields and verify that all information is complete and accurate before signing and filing.

DISADVANTAGED BUSINESS ENTERPRISE (DBE)

Under 49 CFR 26.13(b):

> The contractor, sub recipient or subcontractor shall not discriminate on the basis of race, color, national origin, or sex in the performance of this contract. The contractor shall carry out applicable requirements of 49 CFR part 26 in the award and administration of DOT-assisted contracts. Failure by the contractor to carry out these requirements is a material breach of this contract, which may result in the termination of this contract or such other remedy as the recipient deems appropriate.

Take necessary and reasonable steps to ensure that DBEs have opportunity to participate in the contract (49 CFR 26).

To ensure equal participation of DBEs provided in 49 CFR 26.5, the Agency shows a goal for DBEs.

Make work available to DBEs and select work parts consistent with available DBE subcontractors and suppliers.

Meet the DBE goal shown elsewhere in these special provisions or demonstrate that you made adequate good faith efforts to meet this goal.

It is your responsibility to verify that the DBE firm is certified as DBE at date of bid opening. For a list of DBEs certified by the California Unified Certification Program, go to:

http://www.dot.ca.gov/hq/bep/find_certified.htm

All DBE participation will count toward the California Department of Transportation's federally mandated statewide overall DBE goal.

Credit for material or supplies you purchase from DBEs counts toward the goal in the following manner:

1. 100 percent counts if the material or are obtained from a DBE manufacturer.
2. 60 percent counts if the materials or supplies are obtained from a DBE regular dealer.
3. Only fees, commissions, and charges for assistance in the procurement and delivery of materials or supplies count if obtained from a DBE that is neither a manufacturer or regular dealer. 49 CFR 26.55 defines "manufacturer" and "regular dealer."

You receive credit towards the goal if you employ a DBE trucking company that performs a commercially useful function as defined in 49 CFR 26.55(d)(1) through (4) and (6).

DBE Commitment Submittal

Submit Local Agency Bidder DBE Commitment (Construction Contracts), Exhibit 15-G, form, included in the Bid book. If the form is not submitted with the bid, remove the form from the Bid book before submitting your bid.

If the DBE Commitment form is not submitted with the bid, the apparent low bidder, the 2nd low bidder, and the 3rd low bidder must complete and submit the DBE Commitment form to the Agency. DBE Commitment form must be received by the Agency no later than 4:00 p.m. on the 4th business day after bid opening.

Other bidders do not need to submit the DBE Commitment form unless the Agency requests it. If

the Agency requests you to submit a DBE Commitment form, submit the completed form within 4 business days of the request.

Submit written confirmation from each DBE stating that it is participating in the contract. Include confirmation with the DBE Commitment form. A copy of a DBE's quote will serve as written confirmation that the DBE is participating in the contract

If you do not submit the DBE Commitment form within the specified time, the Agency finds your bid nonresponsive..

Good Faith Efforts Submittal

If you have not met the DBE goal, complete and submit the "DBE Information - Good Faith Efforts," Exhibit 15-H, form with the bid showing that you made adequate good faith efforts to meet the goal. Only good faith efforts directed towards obtaining participation by DBEs will be considered. If good faith efforts documentation is not submitted with the bid, it must be received by the Agency no later than 4:00 p.m. on the 4th business day after bid opening.

If your DBE Commitment form shows that you have met the DBE goal or if you are required to submit the DBE Commitment form, you must also submit good faith efforts documentation within the specified time to protect your eligibility for award of the contract in the event the Agency finds that the DBE goal has not been met.

Good faith efforts documentation must include the following information and supporting documents, as necessary:

1. Items of work you have made available to DBE firms. Identify those items of work you might otherwise perform with its own forces and those items that have been broken down into economically feasible units to facilitate DBE participation. For each item listed, show the dollar value and percentage of the total contract. It is your responsibility to demonstrate that sufficient work to meet the goal was made available to DBE firms.

2. Names of certified DBEs and dates on which they were solicited to bid on the project. Include the items of work offered. Describe the methods used for following up initial solicitations to determine with certainty if the DBEs were interested, and the dates of the follow-up. Attach supporting documents such as copies of letters, memos, facsimiles sent, telephone logs, telephone billing statements, and other evidence of solicitation. You are reminded to solicit certified DBEs through all reasonable and available means and provide sufficient time to allow DBEs to respond.

3. Name of selected firm and its status as a DBE for each item of work made available. Include name, address, and telephone number of each DBE that provided a quote and their price quote. If the firm selected for the item is not a DBE, provide the reasons for the selection.

4. Name and date of each publication in which you requested DBE participation for the project. Attach copies of the published advertisements.

5. Names of agencies and dates on which they were contacted to provide assistance in contacting, recruiting, and using DBE firms. If the agencies were contacted in writing, provide copies of supporting documents.

6. List of efforts made to provide interested DBEs with adequate information about the plans, specifications, and requirements of the contract to assist them in responding to a solicitation.

If you have provided information, identify the name of the UDBE assisted, the nature of the information provided, and date of contact. Provide copies of supporting documents, as appropriate.

7. List of efforts made to assist interested DBEs in obtaining bonding, lines of credit, insurance, necessary equipment, supplies, and materials, excluding supplies and equipment that the UDBE subcontractor purchases or leases from the prime contractor or its affiliate. If such assistance is provided by you, identify the name of the UDBE assisted, nature of the assistance offered, and date. Provide copies of supporting documents, as appropriate.

8. Any additional data to support demonstration of good faith efforts.

The Agency may consider DBE commitments of the 2nd and 3rd bidders when determining whether the low bidder made good faith efforts to meet the DBE goal.

LABOR NONDISCRIMINATION

Attention is directed to the following Notice that is required by Chapter 5 of Division 4 of Title 2, California Code of Regulations.

NOTICE OF REQUIREMENT FOR NONDISCRIMINATION PROGRAM (GOV. CODE, SECTION 12990)

Your attention is called to the "Nondiscrimination Clause", set forth in Section 7-1.01A(4), "Labor Nondiscrimination," of the Standard Specifications, which is applicable to all nonexempt state contracts and subcontracts, and to the "Standard California Nondiscrimination Construction Contract Specifications" set forth therein. The Specifications are applicable to all nonexempt state construction contracts and subcontracts of $5,000 or more.

BUY AMERICA REQUIREMENTS

Attention is directed to the "Buy America" requirements of the Title 23 United States Code, Section 313 and the regulations adopted pursuant thereto. In accordance with said law and regulations, all manufacturing processes for steel and iron materials furnished for incorporation into the work on this project shall occur in the United States; with the exception that pig iron and processed, pelletized and reduced iron ore manufactured outside of the United States may be used in the domestic manufacturing process for such steel and iron materials. The application of coatings, such as epoxy coating, galvanizing, painting, and any other coating that protects or enhances the value of such steel or iron materials shall be considered a manufacturing process subject to the "Buy America" requirements.

A Certificate of Compliance, conforming to the provisions in Section 6-1.07, Certificates of Compliance, of the Standard Specifications, shall be furnished for steel and iron materials. The certificates, in addition to certifying that the materials comply with the specifications, shall also specifically certify that all manufacturing processes for the materials occurred in the United States, except for the exceptions allowed herein. The requirements imposed by said law and regulations do not prevent a minimal use of foreign steel and iron materials if the total combined cost of such materials used does not exceed one-tenth of one percent (0.1%) of the total contract cost or $2,500, whichever is greater. The Contractor shall furnish the Engineer acceptable documentation of the quantity and value of any foreign steel and iron prior to incorporating such materials into the work.

SUBCONTRACTOR AND DBE RECORDS

Use each DBE subcontractor as listed on the List of Subcontractors form and the Local Agency Bidder DBE Commitment (Construction Contracts), Exhibit 15-G, forms unless you receive authorization for a substitution.

The Agency requests the Contractor to:

1. Notify the Engineer of any changes to its anticipated DBE participation
2. Provide this notification before starting the affected work

The CONTRACTOR shall maintain records showing the name and business address of each first-tier subcontractor. The records shall also show the name and business address of every DBE subcontractor, DBE vendor of materials and DBE trucking company, regardless of tier. The records shall show the date of payment and the total dollar figure paid to all of these firms. DBE prime contractors shall also show the date of work performed by their own forces along with the corresponding dollar value of the work.

If you are a DBE contractor, include the date of work performed by your own forces and the corresponding value of the work

Prior to the fifteenth of each month, the CONTRACTOR shall submit the Monthly DBE Trucking Verification form to the Engineer. For each delinquent monthly form, the amount of $5,000 will be withheld from payment until a satisfactory and accurate form is submitted.

If a DBE is decertified before completing its work, the DBE must notify the Engineer in writing of the decertification date. If a business becomes a certified DBE before completing its work, the business must notify the Engineer in writing of the certification date. On work completion and within 30 days of contract acceptance, the Contractor shall complete and submit to the Engineer a Disadvantaged Business Enterprises (DBE) Certification Status Change, Exhibit 17-O, form.

Upon completion of the contract, a summary of these records shall be prepared on "Final Report-Utilization of Disadvantaged Business Enterprises (DBE), First Tier Subcontractors – Exhibit 17-F" Form CEM-2402(F) and certified correct by the CONTRACTOR or the CONTRACTOR'S authorized representative, and shall be furnished to the Engineer. The form shall be furnished to the Engineer within 90 days from the date of contract acceptance. The amount of $10,000 will be withheld from payment until a satisfactory form is submitted.

PERFORMANCE OF DBE

DBEs must perform work or supply materials as listed in the Local Agency Bidder DBE Commitment (Construction Contracts), Exhibit 15-G, included in the Bid.

Do not terminate or substitute a listed DBE for convenience and perform the work with your own forces or obtain materials from other sources without authorization from the Agency.

The Agency authorizes a request to use other forces or sources of materials if it shows any of the following justifications:

1. Listed DBE fails or refuses to execute a written contract based on plans and specifications for the project.
2. You stipulate a bond is a condition of executing the subcontract and the listed DBE fails to meet your bond requirements.
3. Work requires a contractor's license and listed DBE does not have a valid license under Contractors License Law.
4. Listed DBE fails or refuses to perform the work or furnish the listed materials.
5. Listed DBE's work is unsatisfactory and not in compliance with the contract.
6. Listed DBE is ineligible to work on the project because of suspension or debarment.
7. Listed UDBE becomes bankrupt or insolvent.
8. Listed DBE voluntarily withdraws with written notice from the Contract
9. Listed DBE is ineligible to receive credit for the type of work required
10. Listed DBE owner dies or becomes disabled resulting in the inability to perform the work on the Contract
11. Agency determines other documented good cause

Notify the original DBE of your intent to use other forces or material sources and provide the reasons. Provide the DBE with 5 days to respond to your notice and advise you and the Agency of the reasons why the use of other forces or sources of materials should not occur. Your request to use other forces or material sources must include:

1. 1 or more of the reasons listed in the preceding paragraph
2. Notices from you to the DBE regarding the request
3. Notices from the DBEs to you regarding the request

If a listed DBE is terminated, make good faith efforts to find another DBE to substitute for the original DBE. The substitute DBE must perform at least the same amount of work as the original DBE under the contract to the extent needed to meet the DBE goal.

The substitute DBE must be certified as a DBE at the time of request for substitution.
Unless the Agency authorizes (1) a request to use other forces or sources of materials or (2) a good faith effort for a substitution of a terminated DBE, the Agency does not pay for work listed on the

Local Agency Bidder DBE Commitment (Construction Contracts), Exhibit 15-G, form unless it is performed or supplied by the listed DBE or an authorized substitute

SUBCONTRACTING

No subcontract releases the Contractor from the contract or relieves the Contractor of their responsibility for a subcontractor's work.

If the Contractor violates Pub Cont Code § 4100 et seq., the City of Torrance may exercise the remedies provided under Pub Cont Code § 4110. The City of Torrance may refer the violation to the Contractors State License Board as provided under Pub Cont Code § 4111.

The Contractor shall perform work equaling at least 30 percent of the value of the original total bid with the Contractor's own employees and equipment, owned or rented, with or without operators.

Each subcontract must comply with the contract. Each subcontractor must have an active and valid State contractor's license with a classification appropriate for the work to be performed (Bus & Prof Code, § 7000 et seq.).

Submit copies of subcontracts upon request by the Engineer. Before subcontracted work starts, submit a Subcontracting Request form.

Do not use a debarred contractor; a current list of debarred contractors is available at the Department of Industrial Relations' Web site.

Upon request by the Engineer, immediately remove and not again use a subcontractor who fails to prosecute the work satisfactorily.

Each subcontract and any lower tier subcontract that may in turn be made shall include the "Required Contract Provisions Federal-Aid Construction Contracts" in Section 14 of these special provisions. Noncompliance shall be corrected. Payment for subcontracted work involved will be withheld from progress payments due, or to become due, until correction is made. Failure to comply may result in termination of the contract.

PROMPT PROGRESS PAYMENT TO SUBCONTRACTORS

A prime contractor or subcontractor shall pay any subcontractor not later than 10 days of receipt of each progress payment in accordance with the provision in Section 7108.5 of the California Business and Professions Code concerning prompt payment to subcontractors. The 10 days is applicable unless a longer period is agreed to in writing. Any delay or postponement of payment over 30 days may take place only for good cause and with the agency's prior written approval. Any violation of Section 7108.5 shall subject the violating contractor or subcontractor to the penalties, sanction and other remedies of that section. This requirement shall not be construed to limit or impair any contractual, administrative, or judicial remedies otherwise available to the contractor or subcontractor in the event of a dispute involving late payment or nonpayment by the prime contractor, deficient subcontract performance, or noncompliance by a subcontractor.

PROMPT PAYMENT OF FUNDS WITHHELD TO SUBCONTRACTORS

The agency shall hold retainage from the prime contractor and shall make prompt and regular incremental acceptances of portions, as determined by the agency, of the contract work, and pay retainage to the prime contractor based on these acceptances. The prime contractor, or subcontractor, shall return all monies withheld in retention from a subcontractor within 30 days after receiving payment for work satisfactorily completed and accepted including incremental acceptances of portions of the contract work by the agency. Federal law (49CFR26.29) requires that any delay or postponement of payment over 30 days may take place only for good cause and with the agency's prior written approval. Any violation of this provision shall subject the violating prime contractor or subcontractor to the penalties, sanctions and other remedies specified in Section 7108.5 of the Business and Professions Code. These requirements shall not be construed to limit or impair any contractual, administrative, or judicial remedies otherwise available to the prime contractor or subcontractor in the event of a dispute involving late payment or nonpayment by the prime contractor, deficient subcontract performance, or noncompliance by a subcontractor.

Intentionally blank

Attachment A Section 14. Federal Requirements for Federal-Aid Construction Projects

GENERAL.—The work herein proposed will be financed in whole or in part with Federal funds, and therefore all of the statutes, rules and regulations promulgated by the Federal Government and applicable to work financed in whole or in part with Federal funds will apply to such work. The "Required Contract Provisions, Federal-Aid Construction Contracts, "Form FHWA 1273, are included in this Section 14. Whenever in said required contract provisions references are made to "SHA contracting officer," "SHA resident engineer," or "authorized representative of the SHA," such references shall be construed to mean "Engineer" as defined in Section 1-1.18 of the Standard Specifications.

PERFORMANCE OF PREVIOUS CONTRACT.—In addition to the provisions in Section II, "Nondiscrimination," and Section VII, "Subletting or Assigning the Contract," of the required contract provisions, the Contractor shall comply with the following:

The bidder shall execute the CERTIFICATION WITH REGARD TO THE PERFORMANCE OF PREVIOUS CONTRACTS OR SUBCONTRACTS SUBJECT TO THE EQUAL OPPORTUNITY CLAUSE AND THE FILING OF REQUIRED REPORTS located in the proposal. No request for subletting or assigning any portion of the contract in excess of $10,000 will be considered under the provisions of Section VII of the required contract provisions unless such request is accompanied by the CERTIFICATION referred to above, executed by the proposed subcontractor.

NON-COLLUSION PROVISION.—The provisions in this section are applicable to all contracts except contracts for Federal Aid Secondary projects.

Title 23, United States Code, Section 112, requires as a condition precedent to approval by the Federal Highway Administrator of the contract for this work that each bidder file a sworn statement executed by, or on behalf of, the person, firm, association, or corporation to whom such contract is to be awarded, certifying that such person, firm, association, or corporation has not, either directly or indirectly, entered into any agreement, participated in any collusion, or otherwise taken any action in restraint of free competitive bidding in connection with the submitted bid. A form to make the non-collusion affidavit statement required by Section 112 as a certification under penalty of perjury rather than as a sworn statement as permitted by 28, USC, Sec. 1746, is included in the proposal.

PARTICIPATION BY DISADVANTAGED BUSINESS ENTERPRISES IN SUBCONTRACTING.—Part 26, Title 49, Code of Federal Regulations applies to this Federal-aid project. Pertinent sections of said Code are incorporated in part or in its entirety within other sections of these special provisions.

Schedule B—Information for Determining Joint Venture Eligibility

(This form need not be filled in if all joint venture firms are DBE owned.)

1. Name of joint venture _____

_____

2. Address of joint venture _____

_____

3. Phone number of joint venture _____

_____

4. Identify the firms which comprise the joint venture. (The DBE partner must complete Schedule A.) _____

_____

a. Describe the role of the DBE firm in the joint venture.

_____

_____

b. Describe very briefly the experience and business qualifications of each non-DBE joint venturer: _____

_____

5. Nature of the joint venture's business _____

_____

6. Provide a copy of the joint venture agreement.

7. What is the claimed percentage of DBE ownership? ___

_____

8. Ownership of joint venture: (This need not be filled in if described in the joint venture agreement, provided by question 6.).

Revised 3-95
08-07-95

a. Profit and loss sharing.
b. Capital contributions, including equipment.
c. Other applicable ownership interests.

9. Control of and participation in this contract. Identify by name, race, sex, and "firm" those individuals (and their titles) who are responsible for day-to-day management and policy decision making, including, but not limited to, those with prime responsibility for:

a. Financial decisions _____

_____

b. Management decisions, such as:

1. Estimating _____

_____

2. Marketing and sales _____

_____

3. Hiring and firing of management personnel ___

_____

4. Purchasing of major items or supplies _____

_____

c. Supervision of field operations _____

_____

Note.—If, after filing this Schedule B and before the completion of the joint venture's work on the contract covered by this regulation, there is any significant change in the information submitted, the joint venture must inform the grantee, either directly or through the prime contractor if the joint venture is a subcontractor.

Affidavit

."The undersigned swear that the foregoing statements are correct and include all material information necessary to identify and explain the terms and operation of our joint venture and the intended participation by each joint venturer in the undertaking. Further, the undersigned covenant and agree to provide to grantee current, complete and accurate information regarding actual joint venture work and the payment therefor and any proposed changes in any of the joint venture arrangements and to permit the audit and examination of the books, records and files of the joint venture, or those of each joint venturer relevant to the joint venture, by authorized representatives of the grantee or the Federal funding agency. Any material misrepresentation will be grounds for terminating any contract which may be awarded and for initiating action under Federal or State laws concerning false statements."

Name of Firm	Name of Firm
Signature	Signature
Name	Name
Title	Title
Date	Date

Date _____

State of _____

County of _____

On this ____ day of _____, 19 __, before me appeared (Name) _____, to me personally known, who, being duly sworn, did execute the foregoing affidavit, and did state that he or she was properly authorized by (Name of firm) _____ to execute the affidavit and did so as his or her free act and deed.

Notary Public _____

Commission expires _____

[Seal]

Date _____

State of _____

County of _____

On this ___ day of _____, 19 __, before me appeared (Name) _____ to me personally known, who, being duly sworn, did execute the foregoing affidavit, and did state that he or she was properly authorized by (Name of firm) _____ to execute the affidavit and did so as his or her free act and deed.

Notary Public _____

Commission expires _____

[Seal]

Revised 3-95
08-07-95

FR-2

Attachment B Required Contract Provisions Federal-Aid Construction Contracts

FHWA-1273 -- Revised May 1, 2012

REQUIRED CONTRACT PROVISIONS
FEDERAL-AID CONSTRUCTION CONTRACTS

I. General
II. Nondiscrimination
III. Nonsegregated Facilities
IV. Davis-Bacon and Related Act Provisions
V. Contract Work Hours and Safety Standards Act Provisions
VI. Subletting or Assigning the Contract
VII. Safety: Accident Prevention
VIII. False Statements Concerning Highway Projects
IX. Implementation of Clean Air Act and Federal Water Pollution Control Act
X. Compliance with Governmentwide Suspension and Debarment Requirements
XI. Certification Regarding Use of Contract Funds for Lobbying

ATTACHMENTS

A. Employment and Materials Preference for Appalachian Development Highway System or Appalachian Local Access Road Contracts (included in Appalachian contracts only)

I. GENERAL

1.Form FHWA-1273 must be physically incorporated in each construction contract funded under Title 23 (excluding emergency contracts solely intended for debris removal). The contractor (or subcontractor) must insert this form in each subcontract and further require its inclusion in all lower tier subcontracts (excluding purchase orders, rental agreements and other agreements forsupplies or services).

The applicable requirements of Form FHWA-1273 are incorporated by reference for work done under any purchase order, rental agreement or agreement for other services. The prime contractor shall be responsible for compliance by any subcontractor, lower-tier subcontractor or service provider.

Form FHWA-1273 must be included in all Federal-aid design-build contracts, in all subcontracts and in lower tier subcontracts (excluding subcontracts for design services, purchase orders, rental agreements and other agreements for supplies or services). The design-builder shall be responsible for compliance by any subcontractor, lower-tier subcontractor or service provider.

Contracting agencies may reference Form FHWA-1273 in bid proposal or request for proposal documents, however, the Form FHWA-1273 must be physically incorporated (not referenced) in all contracts, subcontracts and lower-tier subcontracts (excluding purchase orders, rental agreements and other agreements for supplies or services related to a construction contract).

2. Subject to the applicability criteria noted in the following sections, these contract provisions shall apply to all work performed on the contract by the contractor's own organization and with the assistance of workers under the contractor's immediate superintendence and to all work performed on the contract by piecework, station work, or by subcontract.

3.A breach of any of the stipulations contained in these Required Contract Provisions may be sufficient grounds for withholding of progress payments, withholding of final payment, termination of the contract, suspension / debarment or any other action determined to be appropriate by the contracting agency and FHWA.

4. Selection of Labor: During the performance of this contract, the contractor shall notuse convict labor for any purpose within the limits of a construction project on a Federal-aid highway unless it is labor performed by convicts who are on parole, supervised release, or probation. The term Federal-aid highway does not include roadways functionally classified as local roads or rural minor collectors.

II. NONDISCRIMINATION

The provisions of this section related to 23 CFR Part 230 are applicable to all Federal-aid construction contracts and to all related construction subcontracts of $10,000 or more. The provisions of 23 CFR Part 230 are not applicable to material supply, engineering, or architectural service contracts.

In addition, the contractor and all subcontractors must comply with the following policies: Executive Order 11246, 41 CFR 60, 29 CFR 1625-1627, Title 23 USC Section 140, the Rehabilitation Act of 1973, as amended (29 USC 794), Title VI of the Civil Rights Act of 1964, as amended, and related regulations including 49 CFR Parts 21, 26 and 27; and 23 CFR Parts 200, 230, and 633.

The contractor and all subcontractors must comply with: the requirements of the Equal Opportunity Clause in 41 CFR 60-1.4(b)and, for all construction contracts exceeding $10,000, the Standard Federal Equal Employment Opportunity Construction Contract Specifications in 41 CFR 60-4.3.

Note: The U.S. Department of Labor has exclusive authority to determine compliance with Executive Order 11246 and the policies of the Secretary of Labor including 41 CFR 60, and 29 CFR 1625-1627. The contracting agency and the FHWA have the authority and the responsibility to ensure compliance with Title 23 USC Section 140, the Rehabilitation Act of 1973, as amended (29 USC 794), and Title VI of the Civil Rights Act of 1964, as amended, and related regulations including 49 CFR Parts 21, 26 and 27; and 23 CFR Parts 200, 230, and 633.

The following provision is adopted from 23 CFR 230, Appendix A, with appropriate revisions to conform to the U.S. Department of Labor (US DOL) and FHWA requirements.

1. Equal Employment Opportunity: Equal employment opportunity (EEO) requirements not to discriminate and to take affirmative action to assure equal opportunity as set forth under laws, executive orders, rules, regulations (28 CFR 35, 29 CFR 1630, 29 CFR 1625-1627, 41 CFR 60 and 49 CFR 27) and orders of the Secretary of Labor as modified by the provisions prescribed herein, and imposed pursuant to 23 U.S.C. 140 shall

constitute the EEO and specific affirmative action standards for the contractor's project activities under

this contract. The provisions of the Americans with Disabilities Act of 1990 (42 U.S.C. 12101 et seq.) set forth under 28 CFR 35 and 29 CFR 1630 are incorporated by reference in this contract. In the execution of this contract, the contractor agrees to comply with the following minimum specific requirement activities of EEO:

a. The contractor will work with the contracting agency and the Federal Government to ensure that it has made every good faith effort to provide equal opportunity with respect to all of its terms and conditions of employment and in their review of activities under the contract.

b. The contractor will accept as its operating policy the following statement:

"It is the policy of this Company to assure that applicants are employed, and that employees are treated during employment, without regard to their race, religion, sex, color, national origin, age or disability. Such action shall include: employment, upgrading, demotion, or transfer; recruitment or recruitment advertising; layoff or termination; rates of pay or other forms of compensation; and selection for training, including apprenticeship, pre-apprenticeship, and/or on-the-job training."

2. EEO Officer: The contractor will designate and make known to the contracting officers an EEO Officer who will have the responsibility for and must be capable of effectively administering and promoting an active EEO program and who must be assigned adequate authority and responsibility to do so.

3.Dissemination of Policy: All members of the contractor's staff who are authorized to hire, supervise, promote, and discharge employees, or who recommend such action, or who are substantially involved in such action, will be made fully cognizant of, and will implement, the contractor's EEO policy and contractual responsibilities to provide EEO in each grade and classification of employment. To ensure that the above agreement will be met, the following actions will be taken as a minimum:

a. Periodic meetings of supervisory and personnel office employees will be conducted before the start of work and then not less often than once every six months, at which time the contractor's EEO policy and its implementation will be reviewed and explained. The meetings will be conducted by the EEO Officer.

b. All new supervisory or personnel office employees will be given a thorough indoctrination by the EEO Officer, covering all major aspects of the contractor's EEO obligations within thirty days following their reporting for duty with the contractor.

c. All personnel who are engaged in direct recruitment for the project will be instructed by the EEO Officer in the contractor's procedures for locating and hiring minorities and women.

d. Notices and posters setting forth the contractor's EEO policy will be placed in areas readily accessible to employees, applicants for employment and potential employees.

e. The contractor's EEO policy and the procedures to implement such policy will be brought to the attention of employees by means of meetings, employee handbooks, or other appropriate means.

4. Recruitment: When advertising for employees, the contractor will include in all advertisements for employees the notation: "An Equal Opportunity Employer." All such advertisements will be placed in publications having a large circulation among minorities and women in the area from which the project work force would normally be derived.

a. The contractor will, unless precluded by a valid bargaining agreement, conduct systematic and direct recruitment through public and private employee referral sources likely to yield qualified minorities and women. To meet this requirement, the contractor will identify sources of potential minority group employees, and establish with such identified sources procedures whereby minority and women applicants may be referred to the contractor for employment consideration.

b. In the event the contractor has a valid bargaining agreement providing for exclusive hiring hall referrals, the contractor is expected to observe the provisions of that agreement to the extent that the system meets the contractor's compliance with EEO contract provisions. Where implementation of such an agreement has the effect of discriminating against minorities or women, or obligates the contractor to do the same, such implementation violates Federal nondiscrimination provisions.

c. The contractor will encourage its present employees to refer minorities and women as applicants for employment. Information and procedures with regard to referring such applicants will be discussed with employees.

5. Personnel Actions: Wages, working conditions, and employee benefits shall be established and administered, and personnel actions of every type, including hiring, upgrading, promotion, transfer, demotion, layoff, and termination, shall be taken without regard to race, color, religion, sex, national origin, age or disability. The following procedures shall be followed:

a. The contractor will conduct periodic inspections of project sites to insure that working conditions and employee facilities do not indicate discriminatory treatment of project site personnel.

b. The contractor will periodically evaluate the spread of wages paid within each classification to determine any evidence of discriminatory wage practices.

c. The contractor will periodically review selected personnel actions in depth to determine whether there is evidence of discrimination. Where evidence is found, the contractor will promptly take corrective action. If the review indicates that the discrimination may extend beyond the actions reviewed, such corrective action shall include all affected persons.

d. The contractor will promptly investigate all complaints of alleged discrimination made to the contractor in connection with its obligations under this contract, will attempt to resolve such complaints, and will take appropriate corrective action within a reasonable time. If the investigation indicates that the discrimination may affect persons other than the complainant, such corrective action shall include such other persons. Upon completion of each investigation, the contractor will inform every complainant of all of their avenues of appeal.

6. Training and Promotion:

a. The contractor will assist in locating, qualifying, and increasing the skills of minorities and women who are applicants for employment or current employees. Such efforts should be aimed at developing full journey level status employees in the type of trade or job classification involved.

b. Consistent with the contractor's work force requirements and as permissible under Federal and State regulations, the contractor shall make full use of training programs, i.e., apprenticeship, and on-the-job training programs for the

geographical area of contract performance. In the event a special provision for training is provided under this contract, this subparagraph will be superseded as indicated in the special provision. The contracting agency may reserve training positions for persons who receive welfare assistance in accordance with 23 U.S.C. 140(a).

c. The contractor will advise employees and applicants for employment of available training programs and entrance requirements for each.

d. The contractor will periodically review the training and promotion potential of employees who are minorities and women and will encourage eligible employees to apply for such training and promotion.

7. Unions: If the contractor relies in whole or in part upon unions as a source of employees, the contractor will use good faith efforts to obtain the cooperation of such unions to increase opportunities for minorities and women. Actions by the contractor, either directly or through a contractor's association acting as agent, will include the procedures set forth below:

a. The contractor will use good faith efforts to develop, in cooperation with the unions, joint training programs aimed toward qualifying more minorities and women for membership in the unions and increasing the skills of minorities and women so that they may qualify for higher paying employment.

b. The contractor will use good faith efforts to incorporate an EEO clause into each union agreement to the end that such union will be contractually bound to refer applicants without regard to their race, color, religion, sex, national origin, age or disability.

c. The contractor is to obtain information as to the referral practices and policies of the labor union except that to the extent such information is within the exclusive possession of the labor union and such labor union refuses to furnish such information to the contractor, the contractor shall so certify to the contracting agency and shall set forth what efforts have been made to obtain such information.

d. In the event the union is unable to provide the contractor with a reasonable flow of referrals within the time limit set forth in the collective bargaining agreement, the contractor will, through independent recruitment efforts, fill the employment vacancies without regard to race, color, religion, sex, national origin, age or disability; making full efforts to obtain qualified and/or qualifiable minorities and women. The failure of a union to provide sufficient referrals (even though it is obligated to provide exclusive referrals under the terms of a collective bargaining agreement) does not relieve the contractor from the requirements of this paragraph. In the event the union referral practice prevents the contractor from meeting the obligations pursuant to Executive Order 11246, as amended, and these special provisions, such contractor shall immediately notify the contracting agency.

8. Reasonable Accommodation for Applicants / Employees with Disabilities: The contractor must be familiar with the requirements for and comply with the Americans with Disabilities Act and all rules and regulations established there under. Employers must provide reasonable accommodation in all employment activities unless to do so would cause an undue hardship.

9. Selection of Subcontractors, Procurement of Materials and Leasing of Equipment: The contractor shall not discriminateon the grounds of race, color, religion, sex, national origin, age or disabilityin the selection and retention of subcontractors, including procurement of materials and leases of equipment. The contractor shall take all necessary and reasonable steps to ensure nondiscrimination in the administration of this contract.

a. The contractor shall notify all potential subcontractors and suppliers and lessors of their EEO obligations under this contract.

b. The contractor will use good faith efforts to ensure subcontractor compliance with their EEO obligations.

10. Assurance Required by 49 CFR 26.13(b):

a. The requirements of 49 CFR Part 26 and the State DOT's U.S. DOT-approved DBE program are incorporated by reference.

b. The contractor or subcontractor shall not discriminate on the basis of race, color, national origin, or sex in the performance of this contract. The contractor shall carry out applicable requirements of 49 CFR Part 26 in the award and administration of DOT-assisted contracts. Failure by the contractor to carry out these requirements is a material breach of this contract, which may result in the termination of this contract or such other remedy as the contracting agency deems appropriate.

11. Records and Reports: The contractor shall keep such records as necessary to document compliance with the EEO requirements. Such records shall be retained for a period of three years following the date of the final payment to the contractor for all contract work and shall be available at reasonable times and places for inspection by authorized representatives of the contracting agency and the FHWA.

a.The records kept by the contractor shall document the following:

(1) The number and work hours of minority and non-minority group members and women employed in each work classification on the project;

(2) The progress and efforts being made in cooperation with unions, when applicable, to increase employment opportunities for minorities and women; and

(3) The progress and efforts being made in locating, hiring, training, qualifying, and upgrading minorities and women;

b. The contractors and subcontractors will submit an annual report to the contracting agency each July for the duration of the project, indicating the number of minority, women, and non-minority group employees currently engaged in each work classification required by the contract work. This information is to be reported on Form FHWA-1391. The staffing data should represent the project work force on board in all or any part of the last payroll period preceding the end of July. If on-the-job training is being required by special provision, the contractor will be required to collect and report training data. The employment data should reflect the work force on board during all or any part of the last payroll period preceding the end of July.

III. NONSEGREGATED FACILITIES

This provision is applicable to all Federal-aid construction contracts and to all related construction subcontracts of $10,000 or more.

The contractor must ensure that facilities provided for employees are provided in such a manner that segregation on the basis of race, color, religion, sex, or national origin cannot result. The contractor may neither require such segregated use

by written or oral policies nor tolerate such use by employee custom. The contractor's obligation extends further to ensure that its employees are not assigned to perform their services at any location, under the contractor's control, where the facilities are segregated. The term "facilities" includes waiting rooms, work areas, restaurants and other eating areas, time clocks, restrooms, washrooms, locker rooms, and other storage or dressing areas, parking lots, drinking fountains, recreation or entertainment areas, transportation, and housing provided for employees. The contractor shall provide separate or single-user restrooms and necessary dressing or sleeping areas to assure privacy between sexes.

IV. Davis-Bacon and Related Act Provisions

This section is applicable to all Federal-aid construction projects exceeding $2,000 and to all related subcontracts and lower-tier subcontracts (regardless of subcontract size). The requirements apply to all projects located within the right-of-way of a roadway that is functionally classified as Federal-aid highway. This excludes roadways functionally classified as local roads or rural minor collectors, which are exempt. Contracting agencies may elect to apply these requirements to other projects.

The following provisions are from the U.S. Department of Labor regulations in 29 CFR 5.5 "Contract provisions and related matters" with minor revisions to conform to the FHWA-1273 format and FHWA program requirements.

1. Minimum wages

a. All laborers and mechanics employed or working upon the site of the work, will be paid unconditionally and not less often than once a week, and without subsequent deduction or rebate on any account (except such payroll deductions as are permitted by regulations issued by the Secretary of Labor under the Copeland Act (29 CFR part 3)), the full amount of wages and bona fide fringe benefits (or cash equivalents thereof) due at time of payment computed at rates not less than those contained in the wage determination of the Secretary of Labor which is attached hereto and made a part hereof, regardless of any contractual relationship which may be alleged to exist between the contractor and such laborers and mechanics.

Contributions made or costs reasonably anticipated for bona fide fringe benefits under section 1(b)(2) of the Davis-Bacon Act on behalf of laborers or mechanics are considered wages paid to such laborers or mechanics, subject to the provisions of paragraph 1.d. of this section; also, regular contributions made or costs incurred for more than a weekly period (but not less often than quarterly) under plans, funds, or programs which cover the particular weekly period, are deemed to be constructively made or incurred during such weekly period. Such laborers and mechanics shall be paid the appropriate wage rate and fringe benefits on the wage determination for the classification of work actually performed, without regard to skill, except as provided in 29 CFR 5.5(a)(4). Laborers or mechanics performing work in more than one classification may be compensated at the rate specified for each classification for the time actually worked therein: Provided, That the employer's payroll records accurately set forth the time spent in each classification in which work is performed. The wage determination (including any additional classification and wage rates conformed under paragraph 1.b. of this section) and the Davis-Bacon poster (WH–1321) shall be posted at all times by the contractor and its subcontractors at the site of the work in a prominent and accessible place where it can be easily seen by the workers.

b. (1) The contracting officer shall require that any class of laborers or mechanics, including helpers, which is not listed in the wage determination and which is to be employed under the contract shall be classified in conformance with the wage determination. The contracting officer shall approve an additional classification and wage rate and fringe benefits therefore only when the following criteria have been met:

(i) The work to be performed by the classification requested is not performed by a classification in the wage determination; and

(ii) The classification is utilized in the area by the construction industry; and

(iii) The proposed wage rate, including any bona fide fringe benefits, bears a reasonable relationship to the wage rates contained in the wage determination.

(2) If the contractor and the laborers and mechanics to be employed in the classification (if known), or their representatives, and the contracting officer agree on the classification and wage rate (including the amount designated for fringe benefits where appropriate), a report of the action taken shall be sent by the contracting officer to the Administrator of the Wage and Hour Division, Employment Standards Administration, U.S. Department of Labor, Washington, DC 20210. The Administrator, or an authorized representative, will approve, modify, or disapprove every additional classification action within 30 days of receipt and so advise the contracting officer or will notify the contracting officer within the 30-day period that additional time is necessary.

(3) In the event the contractor, the laborers or mechanics to be employed in the classification or their representatives, and the contracting officer do not agree on the proposed classification and wage rate (including the amount designated for fringe benefits, where appropriate), the contracting officer shall refer the questions, including the views of all interested parties and the recommendation of the contracting officer, to the Wage and Hour Administrator for determination. The Wage and Hour Administrator, or an authorized representative, will issue a determination within 30 days of receipt and so advise the contracting officer or will notify the contracting officer within the 30-day period that additional time is necessary.

(4) The wage rate (including fringe benefits where appropriate) determined pursuant to paragraphs 1.b.(2) or 1.b.(3) of this section, shall be paid to all workers performing work in the classification under this contract from the first day on which work is performed in the classification.

c. Whenever the minimum wage rate prescribed in the contract for a class of laborers or mechanics includes a fringe benefit which is not expressed as an hourly rate, the contractor shall either pay the benefit as stated in the wage determination or shall pay another bona fide fringe benefit or an hourly cash equivalent thereof.

d.If the contractor does not make payments to a trustee or other third person, the contractor may consider as part of the wages of any laborer or mechanic the amount of any costs reasonably anticipated in providing bona fide fringe benefits under a plan or program, Provided, That the Secretary of Labor has found, upon the written request of the contractor, that the applicable standards of the Davis-Bacon Act have been met. The Secretary of Labor may require the contractor to set aside in a separate account assets for the meeting of obligations under the plan or program.

2. Withholding

The contracting agency shall upon its own action or upon written request of an authorized representative of the Department of Labor, withhold or cause to be withheld from the contractor under this contract, or any other Federal contract with the same prime contractor, or any other federally-assisted contract subject to Davis-Bacon prevailing wage requirements, which is held by the same prime contractor, so much of the accrued payments or advances as may be considered necessary to pay laborers and mechanics, including apprentices, trainees, and helpers, employed by the contractor or any subcontractor the full amount of wages required by the contract. In the event of failure to pay any laborer or mechanic, including any apprentice, trainee, or helper, employed or working on the site of the work, all or part of the wages required by the contract, the contracting agency may, after written notice to the contractor, take such action as may be necessary to cause the suspension of any further payment, advance, or guarantee of funds until such violations have ceased.

3. Payrolls and basic records

a.Payrolls and basic records relating thereto shall be maintained by the contractor during the course of the work and preserved for a period of three years thereafter for all laborers and mechanics working at the site of the work. Such records shall contain the name, address, and social security number of each such worker, his or her correct classification, hourly rates of wages paid (including rates of contributions or costs anticipated for bona fide fringe benefits or cash equivalents thereof of the types described in section 1(b)(2)(B) of the Davis-Bacon Act), daily and weekly number of hours worked, deductions made and actual wages paid. Whenever the Secretary of Labor has found under 29 CFR 5.5(a)(1)(iv) that the wages of any laborer or mechanic include the amount of any costs reasonably anticipated in providing benefits under a plan or program described in section 1(b)(2)(B) of the Davis-Bacon Act, the contractor shall maintain records which show that the commitment to provide such benefits is enforceable, that the plan or program is financially responsible, and that the plan or program has been communicated in writing to the

laborers or mechanics affected, and records which show the costs anticipated or the actual cost incurred in providing such benefits. Contractors employing apprentices or trainees under approved programs shall maintain written evidence of the registration of apprenticeship programs and certification of trainee programs, the registration of the apprentices and trainees, and the ratios and wage rates prescribed in the applicable programs.

b.(1) The contractor shall submit weekly for each week in which any contract work is performed a copy of all payrolls to the contracting agency. The payrolls submitted shall set out accurately and completely all of the information required to be maintained under 29 CFR 5.5(a)(3)(i), except that full social security numbers and home addresses shall not be included on weekly transmittals. Instead the payrolls shall only need to include an individually identifying number for each employee (e.g. , the last four digits of the employee's social security number). The required weekly payroll information may be submitted in any form desired. Optional Form WH–347 is available for this purpose from the Wage and Hour Division Web site at http://www.dol.gov/esa/whd/forms/wh347instr.htm or its successor site. The prime contractor is responsible for the submission of copies of payrolls by all subcontractors. Contractors and subcontractors shall maintain the full social security number and current address of each covered worker, and shall provide them upon request to the contracting agency for transmission to the State DOT, the FHWA or the Wage and Hour Division of the Department of Labor for purposes of an investigation or audit of compliance with prevailing wage requirements. It is not a violation of this section for a prime contractor to require a subcontractor to provide addresses and social security numbers to the prime contractor for its own records, without weekly submission to the contracting agency..

(2) Each payroll submitted shall be accompanied by a "Statement of Compliance," signed by the contractor or subcontractor or his or her agent who pays or supervises the payment of the persons employed under the contract and shall certify the following:

(i) That the payroll for the payroll period contains the information required to be provided under §5.5 (a)(3)(ii) of Regulations, 29 CFR part 5, the appropriate information is being maintained under §5.5 (a)(3)(i) of Regulations, 29 CFR part 5, and that such information is correct and complete;

(ii) That each laborer or mechanic (including each helper, apprentice, and trainee) employed on the contract during the payroll period has been paid the full weekly wages earned, without rebate, either directly or indirectly, and that no deductions have been made either directly or indirectly from the full wages earned, other than permissible deductions as set forth in Regulations, 29 CFR part 3;

(iii) That each laborer or mechanic has been paid not less than the applicable wage rates and fringe benefits or cash equivalents for the classification of work performed, as specified in the applicable wage determination incorporated into the contract.

(3) The weekly submission of a properly executed certification set forth on the reverse side of Optional Form WH–347 shall satisfy the requirement for submission of the

"Statement of Compliance" required by paragraph 3.b.(2) of this section.

(4) The falsification of any of the above certifications may subject the contractor or subcontractor to civil or criminal prosecution under section 1001 of title 18 and section 231 of title 31 of the United States Code.

c. The contractor or subcontractor shall make the records required under paragraph 3.a. of this section available for inspection, copying, or transcription by authorized representatives of the contracting agency, the State DOT, the FHWA, or the Department of Labor, and shall permit such representatives to interview employees during working hours on the job. If the contractor or subcontractor fails to submit the required records or to make them available, the FHWA may, after written notice to the contractor, the contracting agency or the State DOT, take such action as may be necessary to cause the suspension of any further payment, advance, or guarantee of funds. Furthermore, failure to submit the required records upon request or to make such records available may be grounds for debarment action pursuant to 29 CFR 5.12.

4. Apprentices and trainees

a. Apprentices (programs of the USDOL).

Apprentices will be permitted to work at less than the predetermined rate for the work they performed when they are employed pursuant to and individually registered in a bona fide apprenticeship program registered with the U.S. Department of Labor, Employment and Training Administration, Office of Apprenticeship Training, Employer and Labor Services, or with a State Apprenticeship Agency recognized by the Office, or if a person is employed in his or her first 90 days of probationary employment as an apprentice in such an apprenticeship program, who is not individually registered in the program, but who has been certified by the Office of Apprenticeship Training, Employer and Labor Services or a State Apprenticeship Agency (where appropriate) to be eligible for probationary employment as an apprentice.

The allowable ratio of apprentices to journeymen on the job site in any craft classification shall not be greater than the ratio permitted to the contractor as to the entire work force under the registered program. Any worker listed on a payroll at an apprentice wage rate, who is not registered or otherwise employed as stated above, shall be paid not less than the applicable wage rate on the wage determination for the classification of work actually performed. In addition, any apprentice performing work on the job site in excess of the ratio permitted under the registered program shall be paid not less than the applicable wage rate on the wage determination for the work actually performed. Where a contractor is performing construction on a project in a locality other than that in which its program is registered, the ratios and wage rates (expressed in percentages of the journeyman's hourly rate) specified in the contractor's or subcontractor's registered program shall be observed.

Every apprentice must be paid at not less than the rate specified in the registered program for the apprentice's level of progress, expressed as a percentage of the journeymen hourly rate specified in the applicable wage determination. Apprentices shall be paid fringe benefits in accordance with the provisions of the apprenticeship program. If the apprenticeship program does not specify fringe benefits, apprentices must be paid the full amount of fringe benefits listed on the wage determination for the applicable classification. If the Administrator determines that a different practice prevails for the applicable apprentice classification, fringes shall be paid in accordance with that determination.

In the event the Office of Apprenticeship Training, Employer and Labor Services, or a State Apprenticeship Agency recognized by the Office, withdraws approval of an apprenticeship program, the contractor will no longer be permitted to utilize apprentices at less than the applicable predetermined rate for the work performed until an acceptable program is approved.

b. Trainees (programs of the USDOL).

Except as provided in 29 CFR 5.16, trainees will not be permitted to work at less than the predetermined rate for the work performed unless they are employed pursuant to and individually registered in a program which has received prior approval, evidenced by formal certification by the U.S. Department of Labor, Employment and Training Administration.

The ratio of trainees to journeymen on the job site shall not be greater than permitted under the plan approved by the Employment and Training Administration.

Every trainee must be paid at not less than the rate specified in the approved program for the trainee's level of progress, expressed as a percentage of the journeyman hourly rate specified in the applicable wage determination. Trainees shall be paid fringe benefits in accordance with the provisions of the trainee program. If the trainee program does not mention fringe benefits, trainees shall be paid the full amount of fringe benefits listed on the wage determination unless the Administrator of the Wage and Hour Division determines that there is an apprenticeship program associated with the corresponding journeyman wage rate on the wage determination which provides for less than full fringe benefits for apprentices. Any employee listed on the payroll at a trainee rate who is not registered and participating in a training plan approved by the Employment and Training Administration shall be paid not less than the applicable wage rate on the wage determination for the classification of work actually performed. In addition, any trainee performing work on the job site in excess of the ratio permitted under the registered program shall be paid not less than the applicable wage rate on the wage determination for the work actually performed.

In the event the Employment and Training Administration withdraws approval of a training program, the contractor will no longer be permitted to utilize trainees at less than the applicable predetermined rate for the work performed until an acceptable program is approved.

c. Equal employment opportunity. The utilization of apprentices, trainees and journeymen under this part shall be in conformity with the equal employment opportunity requirements of Executive Order 11246, as amended, and 29 CFR part 30.

d. Apprentices and Trainees (programs of the U.S. DOT).

Apprentices and trainees working under apprenticeship and skill training programs which have been certified by the Secretary of Transportation as promoting EEO in connection with Federal-aid highway construction programs are not subject to the requirements of paragraph 4 of this Section IV. The straight time hourly wage rates for apprentices and trainees under such programs will be established by the particular programs. The ratio of apprentices and trainees to journeymen shall not be greater than permitted by the terms of the particular program.

5. Compliance with Copeland Act requirements. The contractor shall comply with the requirements of 29 CFR part 3, which are incorporated by reference in this contract.

6. Subcontracts. The contractor or subcontractor shall insert Form FHWA-1273 in any subcontracts and also require the subcontractors to include Form FHWA-1273 in any lower tier subcontracts. The prime contractor shall be responsible for the compliance by any subcontractor or lower tier subcontractor with all the contract clauses in 29 CFR 5.5.

7. Contract termination: debarment.A breach of the contract clauses in 29 CFR 5.5 may be grounds for termination of the contract, and for debarment as a contractor and a subcontractor as provided in 29 CFR 5.12.

8. Compliance with Davis-Bacon and Related Act requirements. All rulings and interpretations of the Davis-Bacon and Related Acts contained in 29 CFR parts 1, 3, and 5 are herein incorporated by reference in this contract.

9. Disputes concerning labor standards. Disputes arising out of the labor standards provisions of this contract shall not be subject to the general disputes clause of this contract. Such disputes shall be resolved in accordance with the procedures of the Department of Labor set forth in 29 CFR parts 5, 6, and 7. Disputes within the meaning of this clause include disputes between the contractor (or any of its subcontractors) and the contracting agency, the U.S. Department of Labor, or the employees or their representatives.

10. Certification of eligibility.

a. By entering into this contract, the contractor certifies that neither it (nor he or she) nor any person or firm who has an interest in the contractor's firm is a person or firm ineligible to be awarded Government contracts by virtue of section 3(a) of the Davis-Bacon Act or 29 CFR 5.12(a)(1).

b. No part of this contract shall be subcontracted to any person or firm ineligible for award of a Government contract by virtue of section 3(a) of the Davis-Bacon Act or 29 CFR 5.12(a)(1).

c. The penalty for making false statements is prescribed in the U.S. Criminal Code, 18 U.S.C. 1001.

V. CONTRACT WORK HOURS AND SAFETY STANDARDS ACT

The following clauses apply to any Federal-aid construction contract in an amount in excess of $100,000 and subject to the overtime provisions of the Contract Work Hours and Safety Standards Act. These clauses shall be inserted in addition to the clauses required by 29 CFR 5.5(a) or 29 CFR 4.6. As used in this paragraph, the terms laborers and mechanics include watchmen and guards.

1. Overtime requirements. No contractor or subcontractor contracting for any part of the contract work which may require or involve the employment of laborers or mechanics shall require or permit any such laborer or mechanic in any workweek in which he or she is employed on such work to work in excess of forty hours in such workweek unless such laborer or mechanic receives compensation at a rate not less than one and one-half times the basic rate of pay for all hours worked in excess of forty hours in such workweek.

2. Violation; liability for unpaid wages; liquidated damages. In the event of any violation of the clause set forth in paragraph (1.) of this section, the contractor and any subcontractor responsible therefor shall be liable for the unpaid wages. In addition, such contractor and subcontractor shall be liable to the United States (in the case of work done under contract for the District of Columbia or a territory, to such District or to such territory), for liquidated damages. Such liquidated damages shall be computed with respect to each individual laborer or mechanic, including watchmen and guards, employed in violation of the clause set forth in paragraph (1.) of this section, in the sum of $10 for each calendar day on which such individual was required or permitted to work in excess of the standard workweek of forty hours without payment of the overtime wages required by the clause set forth in paragraph (1.) of this section.

3. Withholding for unpaid wages and liquidated damages. The FHWA or the contacting agency shall upon its own action or upon written request of an authorized representative of the Department of Labor withhold or cause to be withheld, from any moneys payable on account of work performed by the contractor or subcontractor under any such contract or any other Federal contract with the same prime contractor, or any other federally-assisted contract subject to the Contract Work Hours and Safety Standards Act, which is held by the same prime contractor, such sums as may be determined to be necessary to satisfy any liabilities of such contractor or subcontractor for unpaid wages and liquidated damages as provided in the clause set forth in paragraph (2.) of this section.

4. Subcontracts. The contractor or subcontractor shall insert in any subcontracts the clauses set forth in paragraph (1.) through (4.) of this section and also a clause requiring the subcontractors to include these clauses in any lower tier subcontracts. The prime contractor shall be responsible for compliance by any subcontractor or lower tier subcontractor with the clauses set forth in paragraphs (1.) through (4.) of this section.

VI. SUBLETTING OR ASSIGNING THE CONTRACT

This provision is applicable to all Federal-aid construction contracts on the National Highway System.

1. The contractor shall perform with its own organization contract work amounting to not less than 30 percent (or a greater percentage if specified elsewhere in the contract) of the total original contract price, excluding any specialty items designated by the contracting agency. Specialty items may be performed by subcontract and the amount of any such specialty items performed may be deducted from the total original contract price before computing the amount of work required to be performed by the contractor's own organization (23 CFR 635.116).

a. The term "perform work with its own organization" refers to workers employed or leased by the prime contractor, and equipment owned or rented by the prime contractor, with or without operators. Such term does not include employees or equipment of a subcontractor or lower tier subcontractor, agents of the prime contractor, or any other assignees. The term may include payments for the costs of hiring leased employees from an employee leasing firm meeting all relevant Federal and State regulatory requirements. Leased employees may only be included in this term if the prime contractor meets all of the following conditions:

(1) the prime contractor maintains control over the supervision of the day-to-day activities of the leased employees;
(2) the prime contractor remains responsible for the quality of the work of the leased employees;
(3) the prime contractor retains all power to accept or exclude individual employees from work on the project; and
(4) the prime contractor remains ultimately responsible for the payment of predetermined minimum wages, the submission of payrolls, statements of compliance and all other Federal regulatory requirements.

b. "Specialty Items" shall be construed to be limited to work that requires highly specialized knowledge, abilities, or equipment not ordinarily available in the type of contracting organizations qualified and expected to bid or propose on the contract as a whole and in general are to be limited to minor components of the overall contract.

2. The contract amount upon which the requirements set forth in paragraph (1) of Section VI is computed includes the cost of material and manufactured products which are to be purchased or produced by the contractor under the contract provisions.

3. The contractor shall furnish (a) a competent superintendent or supervisor who is employed by the firm, has full authority to direct performance of the work in accordance with the contract requirements, and is in charge of all construction operations (regardless of who performs the work) and (b) such other of its own organizational resources (supervision, management, and engineering services) as the contracting officer determines is necessary to assure the performance of the contract.

4. No portion of the contract shall be sublet, assigned or otherwise disposed of except with the written consent of the contracting officer, or authorized representative, and such consent when given shall not be construed to relieve the contractor of any responsibility for the fulfillment of the contract. Written consent will be given only after the contracting agency has assured that each subcontract is evidenced in writing and that it contains all pertinent provisions and requirements of the prime contract.

5. The 30% self-performance requirement of paragraph (1) is not applicable to design-build contracts; however, contracting agencies may establish their own self-performance requirements.

VII. SAFETY: ACCIDENT PREVENTION

This provision is applicable to all Federal-aid construction contracts and to all related subcontracts.

1. In the performance of this contract the contractor shall comply with all applicable Federal, State, and local laws governing safety, health, and sanitation (23 CFR 635). The contractor shall provide all safeguards, safety devices and protective equipment and take any other needed actions as it determines, or as the contracting officer may determine, to be reasonably necessary to protect the life and health of employees on the job and the safety of the public and to protect property in connection with the performance of the work covered by the contract.

2. It is a condition of this contract, and shall be made a condition of each subcontract, which the contractor enters into pursuant to this contract, that the contractor and any subcontractor shall not permit any employee, in performance of the contract, to work in surroundings or under conditions which are unsanitary, hazardous or dangerous to his/her health or safety, as determined under construction safety and health standards (29 CFR 1926) promulgated by the Secretary of Labor, in accordance with Section 107 of the Contract Work Hours and Safety Standards Act (40 U.S.C. 3704).

3. Pursuant to 29 CFR 1926.3, it is a condition of this contract that the Secretary of Labor or authorized representative thereof, shall have right of entry to any site of contract performance to inspect or investigate the matter of compliance with the construction safety and health standards and to carry out the duties of the Secretary under Section 107 of the Contract Work Hours and Safety Standards Act (40 U.S.C.3704).

VIII. FALSE STATEMENTS CONCERNING HIGHWAY PROJECTS

This provision is applicable to all Federal-aid construction contracts and to all related subcontracts.

In order to assure high quality and durable construction in conformity with approved plans and specifications and a high degree of reliability on statements and representations made by engineers, contractors, suppliers, and workers on Federal-aid highway projects, it is essential that all persons concerned with the project perform their functions as carefully, thoroughly, and honestly as possible. Willful falsification, distortion, or misrepresentation with respect to any facts related to the project is a violation of Federal law. To prevent any misunderstanding regarding the seriousness of these and similar acts, Form FHWA-1022 shall be posted on each Federal-aid highway project (23 CFR 635) in one or more places where it is readily available to all persons concerned with the project:

18 U.S.C. 1020 reads as follows:

"Whoever, being an officer, agent, or employee of the United States, or of any State or Territory, or whoever, whether a person, association, firm, or corporation, knowingly makes any false statement, false representation, or false report as to the character, quality, quantity, or cost of the material used or to

be used, or the quantity or quality of the work performed or to be performed, or the cost thereof in connection with the submission of plans, maps, specifications, contracts, or costs of construction on any highway or related project submitted for approval to the Secretary of Transportation; or

Whoever knowingly makes any false statement, false representation, false report or false claim with respect to the character, quality, quantity, or cost of any work performed or to be performed, or materials furnished or to be furnished, in connection with the construction of any highway or related project approved by the Secretary of Transportation; or

Whoever knowingly makes any false statement or false representation as to material fact in any statement, certificate, or report submitted pursuant to provisions of the Federal-aid Roads Act approved July 1, 1916, (39 Stat. 355), as amended and supplemented;

Shall be fined under this title or imprisoned not more than 5 years or both."

IX. IMPLEMENTATION OF CLEAN AIR ACT AND FEDERAL WATER POLLUTION CONTROL ACT

This provision is applicable to all Federal-aid construction contracts and to all related subcontracts.

By submission of this bid/proposal or the execution of this contract, or subcontract, as appropriate, the bidder, proposer, Federal-aid construction contractor, or subcontractor, as appropriate, will be deemed to have stipulated as follows:

1. That any person who is or will be utilized in the performance of this contract is not prohibited from receiving an award due to a violation of Section 508 of the Clean Water Act or Section 306 of the Clean Air Act.
2. That the contractor agrees to include or cause to be included the requirements of paragraph (1) of this Section X in every subcontract, and further agrees to take such action as the contracting agency may direct as a means of enforcing such requirements.

X. CERTIFICATION REGARDING DEBARMENT, SUSPENSION, INELIGIBILITY AND VOLUNTARY EXCLUSION

This provision is applicable to all Federal-aid construction contracts, design-build contracts, subcontracts, lower-tier subcontracts, purchase orders, lease agreements, consultant contracts or any other covered transactionrequiring FHWA approval or that is estimated to cost $25,000 or more – as defined in 2 CFR Parts 180 and1200.

1. Instructions for Certification – First Tier Participants:

a. By signing and submitting this proposal, the prospective first tier participant is providing the certification set out below.

b. The inability of a person to provide the certification set out below will not necessarily result in denial of participation in this covered transaction. The prospective first tier participant shall submit an explanation of why it cannot provide the certification set out below. The certification or explanation will be considered in connection with the department or agency's determination whether to enter into this transaction. However, failure of the prospective first tier participant to furnish a certification or an explanation shall disqualify such a person from participation in this transaction.

c. The certification in this clause is a material representation of fact upon which reliance was placed when the contracting agency determined to enter into this transaction. If it is later determined that the prospective participant knowingly rendered an erroneous certification, in addition to other remedies available to the Federal Government, the contracting agency may terminate this transaction for cause of default.

d. The prospective first tier participant shall provide immediate written notice to the contracting agency to whom this proposal is submitted if any time the prospective first tier participant learns that its certification was erroneous when submitted or has become erroneous by reason of changed circumstances.

e. The terms "covered transaction," "debarred," "suspended," "ineligible," "participant," "person," "principal," and "voluntarily excluded," as used in this clause, are defined in 2 CFR Parts 180 and 1200. "First Tier Covered Transactions" refers to any covered transaction between a grantee or subgrantee of Federal funds and a participant (such as the prime or general contract). "Lower Tier Covered Transactions" refers to any covered transaction under a First Tier Covered Transaction (such as subcontracts). "First Tier Participant" refers to the participant who has entered into a covered transaction with a grantee or subgrantee of Federal funds (such as the prime or general contractor). "Lower Tier Participant" refers any participant who has entered into a covered transaction with a First Tier Participant or other Lower Tier Participants (such as subcontractors and suppliers).

f. The prospective first tier participant agrees by submitting this proposal that, should the proposed covered transaction be entered into, it shall not knowingly enter into any lower tier covered transaction with a person who is debarred, suspended, declared ineligible, or voluntarily excluded from participation in this covered transaction, unless authorized by the department or agency entering into this transaction.

g. The prospective first tierparticipant further agrees by submitting this proposal that it will include the clause titled "Certification Regarding Debarment, Suspension, Ineligibility and Voluntary Exclusion-Lower Tier Covered Transactions," provided by the department or contracting agency, entering into this covered transaction, without modification, in all lower tier covered transactions and in all solicitations for lower tier covered transactions exceeding the $25,000 threshold.

h. A participant in a covered transaction may rely upon a certification of a prospective participant in a lower tier covered transaction that is not debarred, suspended, ineligible, or voluntarily excluded from the covered transaction, unless it knows that the certification is erroneous.A participant is responsible for ensuring that its principals are not suspended, debarred, or otherwise ineligible to participate in covered transactions. To verify the eligibility of its principals, as well as the eligibility of any lower tier prospective participants, each participant may, but is not required to, check theExcluded Parties List System website (https://www.epls.gov/), which is compiled by the General Services Administration.

i. Nothing contained in the foregoing shall be construed to require the establishment of a system of records in order to render in good faith the certification required by this clause. The knowledge and information of the prospective participant is not required to exceed that which is normally possessed by a prudent person in the ordinary course of business dealings.

j. Except for transactions authorized under paragraph (f) of these instructions, if a participant in a covered transaction knowingly enters into a lower tier covered transaction with a person who is suspended, debarred, ineligible, or voluntarily excluded from participation in this transaction, in addition to other remedies

available to the Federal Government, the department or agency may terminate this transaction for cause or default.

* * * * *

2. Certification Regarding Debarment, Suspension, Ineligibility and Voluntary Exclusion – First Tier Participants:

a. The prospective first tier participant certifies to the best of its knowledge and belief, that it and its principals:

(1) Are not presently debarred, suspended, proposed for debarment, declared ineligible, or voluntarily excluded from participating in covered transactions by any Federal department or agency;

(2) Have not within a three-year period preceding this proposal been convicted of or had a civil judgment rendered against them for commission of fraud or a criminal offense in connection with obtaining, attempting to obtain, or performing a public (Federal, State or local) transaction or contract under a public transaction; violation of Federal or State antitrust statutes or commission of embezzlement, theft, forgery, bribery, falsification or destruction of records, making false statements, or receiving stolen property;

(3) Are not presently indicted for or otherwise criminally or civilly charged by a governmental entity (Federal, State or local) with commission of any of the offenses enumerated in paragraph (a)(2) of this certification; and

(4) Have not within a three-year period preceding this application/proposal had one or more public transactions (Federal, State or local) terminated for cause or default.

b. Where the prospective participant is unable to certify to any of the statements in this certification, such prospective participant shall attach an explanation to this proposal.

2. **Instructions for Certification - Lower Tier Participants:**

(Applicable to all subcontracts, purchase orders and other lower tier transactions requiring prior FHWA approval or estimated to cost $25,000 or more - 2 CFR Parts 180 and 1200)

a. By signing and submitting this proposal, the prospective lower tier is providing the certification set out below.

b. The certification in this clause is a material representation of fact upon which reliance was placed when this transaction was entered into. If it is later determined that the prospective lower tier participant knowingly rendered an erroneous certification, in addition to other remedies available to the Federal Government, the department, or agency with which this transaction originated may pursue available remedies, including suspension and/or debarment.

c. The prospective lower tier participant shall provide immediate written notice to the person to which this proposal is submitted if at any time the prospective lower tier participant learns that its certification was erroneous by reason of changed circumstances.

d. The terms "covered transaction," "debarred," "suspended," "ineligible," "participant," "person," "principal," and "voluntarily excluded," as used in this clause, are defined in 2 CFR Parts 180 and 1200. You may contact the person to which this proposal is submitted for assistance in obtaining a copy of those regulations. "First Tier Covered Transactions" refers to any covered transaction between a grantee or subgrantee of Federal funds and a participant (such as the prime or general contract). "Lower Tier Covered Transactions" refers to any covered transaction under a First Tier Covered Transaction (such as subcontracts). "First Tier Participant" refers to the participant who has entered into a covered transaction with a grantee or subgrantee of Federal funds (such as the prime or general contractor). "Lower Tier Participant" refers any participant who has entered into a covered transaction with a First Tier Participant or other Lower Tier Participants (such as subcontractors and suppliers).

e. The prospective lower tier participant agrees by submitting this proposal that, should the proposed covered transaction be entered into, it shall not knowingly enter into any lower tier covered transaction with a person who is debarred, suspended, declared ineligible, or voluntarily excluded from participation in this covered transaction, unless authorized by the department or agency with which this transaction originated.

f. The prospective lower tier participant further agrees by submitting this proposal that it will include this clause titled "Certification Regarding Debarment, Suspension, Ineligibility and Voluntary Exclusion-Lower Tier Covered Transaction," without modification, in all lower tier covered transactions and in all solicitations for lower tier covered transactions exceeding the $25,000 threshold.

g. A participant in a covered transaction may rely upon a certification of a prospective participant in a lower tier covered transaction that is not debarred, suspended, ineligible, or voluntarily excluded from the covered transaction, unless it knows that the certification is erroneous. A participant is responsible for ensuring that its principals are not suspended, debarred, or otherwise ineligible to participate in covered transactions. To verify the eligibility of its principals, as well as the eligibility of any lower tier prospective participants, each participant may, but is not required to, check the Excluded Parties List System website (https://www.epls.gov/), which is compiled by the General Services Administration.

h. Nothing contained in the foregoing shall be construed to require establishment of a system of records in order to render in good faith the certification required by this clause. The knowledge and information of participant is not required to exceed that which is normally possessed by a prudent person in the ordinary course of business dealings.

i. Except for transactions authorized under paragraph e of these instructions, if a participant in a covered transaction knowingly enters into a lower tier covered transaction with a person who is suspended, debarred, ineligible, or voluntarily excluded from participation in this transaction, in addition to other remedies available to the Federal Government, the department or agency with which this transaction originated may pursue available remedies, including suspension and/or debarment.

* * * * *

Certification Regarding Debarment, Suspension, Ineligibility and Voluntary Exclusion--Lower Tier Participants:

1. The prospective lower tier participant certifies, by submission of this proposal, that neither it nor its principals is presently debarred, suspended, proposed for debarment, declared ineligible, or voluntarily excluded from participating in covered transactions by any Federal department or agency.

2. Where the prospective lower tier participant is unable to certify to any of the statements in this certification, such prospective participant shall attach an explanation to this proposal.

* * * * *

XI. CERTIFICATION REGARDING USE OF CONTRACT FUNDS FOR LOBBYING

This provision is applicable to all Federal-aid construction contracts and to all related subcontracts which exceed $100,000 (49 CFR 20).

1. The prospective participant certifies, by signing and submitting this bid or proposal, to the best of his or her knowledge and belief, that:

a. No Federal appropriated funds have been paid or will be paid, by or on behalf of the undersigned, to any person for influencing or attempting to influence an officer or employee of any Federal agency, a Member of Congress, an officer or employee of Congress, or an employee of a Member of Congress in connection with the awarding of any Federal contract, the making of any Federal grant, the making of any Federal loan, the entering into of any cooperative agreement, and the extension, continuation, renewal, amendment, or modification of any Federal contract, grant, loan, or cooperative agreement.

b. If any funds other than Federal appropriated funds have been paid or will be paid to any person for influencing or attempting to influence an officer or employee of any Federal agency, a Member of Congress, an officer or employee of Congress, or an employee of a Member of Congress in connection with this Federal contract, grant, loan, or cooperative agreement, the undersigned shall complete and submit Standard Form-LLL, "Disclosure Form to Report Lobbying," in accordance with its instructions.

2. This certification is a material representation of fact upon which reliance was placed when this transaction was made or entered into. Submission of this certification is a prerequisite for making or entering into this transaction imposed by 31 U.S.C. 1352. Any person who fails to file the required certification shall be subject to a civil penalty of not less than $10,000 and not more than $100,000 for each such failure.

3. The prospective participant also agrees by submitting its bid or proposal that the participant shall require that the language of this certification be included in all lower tier subcontracts, which exceed $100,000 and that all such recipients shall certify and disclose accordingly.

ATTACHMENT A - EMPLOYMENT AND MATERIALS PREFERENCE FOR APPALACHIAN DEVELOPMENT HIGHWAY SYSTEM OR APPALACHIAN LOCAL ACCESS ROAD CONTRACTS

This provision is applicable to all Federal-aid projects funded under the Appalachian Regional Development Act of 1965.

1. During the performance of this contract, the contractor undertaking to do work which is, or reasonably may be, done as on-site work, shall give preference to qualified persons who regularly reside in the labor area as designated by the DOL wherein the contract work is situated, or the subregion, or the Appalachian counties of the State wherein the contract work is situated, except:

a. To the extent that qualified persons regularly residing in the area are not available.

b. For the reasonable needs of the contractor to employ supervisory or specially experienced personnel necessary to assure an efficient execution of the contract work.

c. For the obligation of the contractor to offer employment to present or former employees as the result of a lawful collective bargaining contract, provided that the number of nonresident persons employed under this subparagraph (1c) shall not exceed 20 percent of the total number of employees employed by the contractor on the contract work, except as provided in subparagraph (4) below.

2. The contractor shall place a job order with the State Employment Service indicating (a) the classifications of the laborers, mechanics and other employees required to perform the contract work, (b) the number of employees required in each classification, (c) the date on which the participant estimates such employees will be required, and (d) any other pertinent information required by the State Employment Service to complete the job order form. The job order may be placed with the State Employment Service in writing or by telephone. If during the course of the contract work, the information submitted by the contractor in the original job order is substantially modified, the participant shall promptly notify the State Employment Service.

3. The contractor shall give full consideration to all qualified job applicants referred to him by the State Employment Service. The contractor is not required to grant employment to any job applicants who, in his opinion, are not qualified to perform the classification of work required.

4. If, within one week following the placing of a job order by the contractor with the State Employment Service, the State Employment Service is unable to refer any qualified job applicants to the contractor, or less than the number requested, the State Employment Service will forward a certificate to the contractor indicating the unavailability of applicants. Such certificate shall be made a part of the contractor's permanent project records. Upon receipt of this certificate, the contractor may employ persons who do not normally reside in the labor area to fill positions covered by the certificate, notwithstanding the provisions of subparagraph (1c) above.

5. The provisions of 23 CFR 633.207(e) allow the contracting agency to provide a contractual preference for the use of mineral resource materials native to the Appalachian region.

6. The contractor shall include the provisions of Sections 1 through 4 of this Attachment A in every subcontract for work which is, or reasonably may be, done as on-site work.

Female and Minority Goals

To comply with Section II, "Nondiscrimination," of "Required Contract Provisions Federal-Aid Construction Contracts," the following female and minority utilization goals for Federal-aid construction contracts and subcontracts that exceed $10,000.

The nationwide goal for female utilization is 6.9 percent.

The goals for minority utilization [45 Fed Reg 65984 (10/3/1980)] are as follows:

Minority Utilization Goals

Economic Area		Goal (Percent)
174	Redding CA: Non-SMSA Counties: CA Lassen; CA Modoc; CA Plumas; CA Shasta; CA Siskiyou; CA Tehema	6.8
175	Eureka, CA Non-SMSA Counties: CA Del Norte; CA Humboldt; CA Trinity	6.6
176	San Francisco-Oakland-San Jose, CA: SMSA Counties: 7120 Salinas-Seaside-Monterey, CA CA Monterey 7360 San Francisco-Oakland CA Alameda; CA Contra Costa; CA Marin: CA San Francisco; CA San Mateo 7400 San Jose, CA CA Santa Clara, CA 7485 Santa Cruz, CA CA Santa Cruz 7500 Santa Rosa CA Sonoma 8720 Vallejo-Fairfield-Napa, CA CA Napa; CA Solano Non-SMSA Counties: CA Lake; CA Mendocino; CA San Benito	 28.9 25.6 19.6 14.9 9.1 17.1 23.2
177	Sacramento, CA: SMSA Counties: 6920 Sacramento, CA CA Placer; CA Sacramento; CA Yolo Non-SMSA Counties CA Butte; CA Colusa; CA El Dorado; CA Glenn; CA Nevada; CA Sierra; CA Sutter; CA Yuba	 16.1 14.3
178	Stockton-Modesto, CA: SMSA Counties: 5170 Modesto, CA CA Stanislaus 8120 Stockton, CA CA San Joaquin Non-SMSA Counties CA Alpine; CA Amador; CA Calaveras; CA Mariposa; CA Merced; CA Toulumne	 12.3 24.3 19.8
179	Fresno-Bakersfield, CA SMSA Counties: 0680 Bakersfield, CA CA Kern 2840 Fresno, CA CA Fresno Non-SMSA Counties:	 19.1 26.1 23.6

	CA Kings; CA Madera; CA Tulare	
180	Los Angeles, CA: SMSA Counties: 0360 Anaheim-Santa Ana-Garden Grove, CA CA Orange 4480 Los Angeles-Long Beach, CA CA Los Angeles 6000 Oxnard-Simi Valley-Ventura, CA CA Ventura 6780 Riverside-San Bernardino-Ontario, CA CA Riverside; CA San Bernardino 7480 Santa Barbara-Santa Maria-Lompoc, CA CA Santa Barbara Non-SMSA Counties CA Inyo; CA Mono; CA San Luis Obispo	 11.9 28.3 21.5 19.0 19.7 24.6
181	San Diego, CA: SMSA Counties 7320 San Diego, CA CA San Diego Non-SMSA Counties CA Imperial	 16.9 18.2

For each July during which work is performed under the contract, you and each non-material-supplier subcontractor with a subcontract of $10,000 or more must complete Form FHWA PR-1391 (Appendix C to 23 CFR 230). Submit the forms by August 15.

Training

This section applies if a number of trainees or apprentices is specified in the special provisions.
As part of your equal opportunity affirmative action program, provide on-the-job training to develop full journeymen in the types of trades or job classifications involved.
You have primary responsibility for meeting this training requirement.
If you subcontract a contract part, determine how many trainees or apprentices are to be trained by the subcontractor.
Include these training requirements in your subcontract.
Where feasible, 25 percent of apprentices or trainees in each occupation must be in their 1st year of apprenticeship or training.
Distribute the number of apprentices or trainees among the work classifications on the basis of your needs and the availability of journeymen in the various classifications within a reasonable recruitment area.
Before starting work, submit to the City/County of _____:

1. Number of apprentices or trainees to be trained for each classification
2. Training program to be used
3. Training starting date for each classification

Obtain the City/County of _____'s approval for this submitted information before you start work. The City/County of _____ credits you for each apprentice or trainee you employ on the work who is currently enrolled or becomes enrolled in an approved program.
The primary objective of this section is to train and upgrade minorities and women toward journeymen status. Make every effort to enroll minority and women apprentices or trainees, such as conducting systematic and direct recruitment through public and private sources likely to yield minority and women apprentices or trainees, to the extent they are available within a reasonable recruitment area. Show that you have made the efforts. In making these efforts, do not discriminate against any applicant for training.
Do not employ as an apprentice or trainee an employee:

1. In any classification in which the employee has successfully completed a training course leading to journeyman status or in which the employee has been employed as a journeyman
2. Who is not registered in a program approved by the US Department of Labor, Bureau of Apprenticeship and Training

Ask the employee if the employee has successfully completed a training course leading to journeyman status or has been employed as a journeyman. Your records must show the employee's answers to the questions.
In your training program, establish the minimum length and training type for each classification. The City/County of _____ and FHWA approves a program if one of the following is met:

1. It is calculated to:

    1.1. Meet the your equal employment opportunity responsibilities
    1.2. Qualify the average apprentice or trainee for journeyman status in the classification involved by the end of the training period

2. It is registered with the U.S. Department of Labor, Bureau of Apprenticeship and Training and it is administered in a way consistent with the equal employment responsibilities of federal-aid highway construction contracts

Obtain the State's approval for your training program before you start work involving the classification covered by the program.
Provide training in the construction crafts, not in clerk-typist or secretarial-type positions. Training is allowed in lower level management positions such as office engineers, estimators, and timekeepers if the training is oriented toward construction applications. Training is allowed in the laborer classification if significant and meaningful training is provided and approved by the division office. Off-site training is allowed if the training is an integral part of an approved training program and does not make up a significant part of the overall training.
The City/County of _____ reimburses you 80 cents per hour of training given an employee on this contract under an approved training program:

1. For on-site training
2. For off-site training if the apprentice or trainee is currently employed on a federal-aid project and you do at least one of the following:

    2.1. Contribute to the cost of the training
    2.2. Provide the instruction to the apprentice or trainee
    2.3. Pay the apprentice's or trainee's wages during the off-site training period

3. If you comply with this section.

Each apprentice or trainee must:

1 Begin training on the project as soon as feasible after the start of work involving the apprentice's or trainee's skill
2. Remain on the project as long as training opportunities exist in the apprentice's or trainee's work classification or until the apprentice or trainee has completed the training program

Furnish the apprentice or trainee:

1. Copy of the program you will comply with in providing the training
2. Certification showing the type and length of training satisfactorily completed

Maintain records and submit reports documenting your performance under this section.

EXHIBIT 15-H DBE INFORMATION —GOOD FAITH EFFORTS
DBE INFORMATION - GOOD FAITH EFFORTS

The City of Torrance established a Disadvantaged Business Enterprise (DBE) goal of 4% for this project. The information provided herein shows that a good faith effort was made.

Lowest, second lowest and third lowest bidders shall submit the following information to document adequate good faith efforts. Bidders should submit the following information even if the "Local Agency Bidder DBE Commitment" form indicates that the bidder has met the DBE goal. This will protect the bidder's eligibility for award of the contract if the administering agency determines that the bidder failed to meet the goal for various reasons, e.g., a DBE firm was not certified at bid opening, or the bidder made a mathematical error.

Submittal of only the "Local Agency Bidder DBE Commitment" form may not provide sufficient documentation to demonstrate that adequate good faith efforts were made.

The following items are listed in the Section entitled "Submission of DBE Commitment" of the Special Provisions:

A. The names and dates of each publication in which a request for DBE participation for this project was placed by the bidder (please attach copies of advertisements or proofs of publication):

Publications	Dates of Advertisement

B. The names and dates of written notices sent to certified DBEs soliciting bids for this project and the dates and methods used for following up initial solicitations to determine with certainty whether the DBEs were interested (please attach copies of solicitations, telephone records, fax confirmations, etc.):

Names of DBEs Solicited	Date of Initial Solicitation	Follow Up Methods and Dates

C. The items of work which the bidder made available to DBE firms including, where appropriate, any breaking down of the contract work items (including those items normally performed by the bidder with its own forces) into economically feasible units to facilitate DBE participation. It is the bidder's responsibility to demonstrate that sufficient work to facilitate DBE participation was made available to DBE firms.

Items of Work	Bidder Normally Performs Item (Y/N)	Breakdown of Items	Amount ($)	Percentage Of Contract

D. The names, addresses and phone numbers of rejected DBE firms, the reasons for the bidder's rejection of the DBEs, the firms selected for that work (please attach copies of quotes from the firms involved), and the price difference for each DBE if the selected firm is not a DBE:

Names, addresses and phone numbers of rejected DBEs and the reasons for the bidder's rejection of the DBEs:

Names, addresses and phone numbers of firms selected for the work above:

E. Efforts made to assist interested DBEs in obtaining bonding, lines of credit or insurance, and any technical assistance or information related to the plans, specifications and requirements for the work which was provided to DBEs:

F. Efforts made to assist interested DBEs in obtaining necessary equipment, supplies, materials or related assistance or services, excluding supplies and equipment the DBE subcontractor purchases or leases from the prime contractor or its affiliate:

G. The names of agencies, organizations or groups contacted to provide assistance in contacting, recruiting and using DBE firms (please attach copies of requests to agencies and any responses received, i.e., lists, Internet page download, etc.):

Name of Agency/Organization	Method/Date of Contact	Results

H. Any additional data to support a demonstration of good faith efforts (use additional sheets if necessary):

_____

_____

NOTE: USE ADDITIONAL SHEETS OF PAPER IF NECESSARY.

SECTION D

DOCUMENTS TO BE COMPLETED AND DELIVERED TO CITY PRIOR TO AWARD OF CONTRACT

PERFORMANCE BOND

KNOW ALL MEN BY THESE PRESENTS:

That we, _____as Principal(s) and _____a corporation, incorporated, organized, and existing under the laws of the State of _____, and authorized to execute bonds and undertakings and to do a general surety business in the State of California, as Surety, are jointly and severally held and firmly bound unto the City of Torrance, a municipal corporation, located in the County of Los Angeles, State of California, in the full and just sum of: _____ Dollars ($_____), lawful money of the United States of America, for the payment of which sum, well and truly to be made, we bind ourselves and our respective heirs, executors, administrators, representative, successors and assigns, jointly and severally, firmly by these presents.

THE CONDITION OF THIS OBLIGATION IS SUCH, that: **WHEREAS,** said Principal(s) have/has entered into, or are/is about to enter into, a certain written contract or agreement, dated as of the _____ day of _____, 20____, with the said City of Torrance for the Construction of **Stormwater Basin Enhancement Project, CIP No. I-102, B2014-12**,all as is more specifically set forth in said contract or agreement, a full, true and correct copy of which is hereunto attached, and hereby referred to and by this reference incorporated herein and made a part hereof;

NOW, THEREFORE, if the said Principal(s) shall faithfully and well and truly do, perform and complete, or cause to be done, performed and complete, each and all of the covenants, terms, conditions, requirements, obligations, acts and things, to be met, done or performed by said Principal(s), including any guarantee period as set forth in, or required by, said contract or agreement, all at and within the time or times, and in the manner as therein specified and contemplated, then this bond and obligation shall be null and void; otherwise it shall be and remain in full force, virtue and effect.

The said Surety, for value received, hereby stipulates and agrees that no amendment, change, extension of time, alteration or addition to said contract or agreement, or of any feature or item or items of performance required therein or thereunder, shall in any manner affect its obligations on or under this bond; and said Surety does hereby waive notice of any such amendment, change, extension of time, alteration, or addition to said contract or agreement, and of any feature or item or items of performance required therein or thereunder.

PERFORMANCE BOND (CONTINUED)

In the event any suit, action or proceedings is instituted to recover on this bond or obligation, said Surety will pay, and does hereby agree to pay, as attorney's fees for said City, such sum as the Court in any such suit, action or proceeding may adjudge reasonable.

EXECUTED, SEALED AND DATED this _____ day of _____, 20____.

CORPORATE SEAL

PRINCIPAL(S):

BY _____

BY _____

CORPORATE SEAL

SURETY:

BY _____

LABOR AND MATERIAL BOND

KNOW ALL MEN BY THESE PRESENTS:

That we,_____
As Principal(s) and _____ a corporation, incorporated, organized, and existing under the laws of the State of _____, and authorized to execute bonds and undertakings and to do a general surety business in the State of California, as Surety, are jointly and severally held and firmly bound unto:

(a) The State of California for the use and benefit of the State Treasurer, as ex-officio Treasurer and custodian of the Unemployment Fund of said State; and

(b) The City of Torrance, California; and

(c) Any and all persons who do or perform or who did or performed work or labor upon or in connection with the work or improvement referred to in the contract or agreement hereinafter mentioned; and

(d) Any and all materialmen, persons, companies, firms, association, or corporations, supplying or furnishing any materials, provisions, provender, transportation, appliances or power, or other supplies used in, upon, for or about or in connection with the performance of the work or improvement contracted to be executed, done, made or performed under said contract or agreement; and

(e) Any and all persons, companies, firms, associations, or corporations furnishing, renting, or hiring teams, equipment, implements or machinery for, in connection with, or contributing to, said work to be done or improvement to be made under said contract or agreement; and

(f) Any and all persons, companies, firms, associations, or corporations who supply both work and materials;

and whose claim has not been paid by said Principal(s), in full and just sum of _____ Dollars ($_____), lawful money of the United States of America, for the payment of which will and truly to be made, said Principal(s) and said Surety do hereby bind themselves and their respective heirs, executors, administrators, representatives, successors and assigns, jointly and severally, firmly by these presents.

LABOR AND MATERIAL BOND (CONTINUED)

THE CONDITION OF THE FOREGOING OBLIGATION IS SUCH, THAT: WHEREAS, said Principal(s) have/has entered into or are/is about to enter into a certain written contract or agreement, dated as of the _____ day of _____20 ___, with the City of Torrance for the Construction of **Stormwater Basin Enhancement Project, CIP No. I-102, B2014-12** all as is more specifically set forth in said contract or agreement, a full, true and correct copy of which is hereunto attached, and hereby referred to and by this reference incorporated herein and made a part hereof;

NOW, THEREFORE, if the said Principal(s) (or any of his/her, its, or their subcontractors) under said contract or agreement fails or fail to pay:

(1) For any materials, provisions, provender, transportation, appliances, or power, or other supplies; or

(2) For the hire of any teams, equipment, implements, or machinery; or

(3) For any work or labor; supplies, furnished, provided, used, done or performed in, upon, for or about or in connection with the said work or improvement; or

(4) For amounts due under the Unemployment Insurance Act of the State of California with respect to such work or improvement;

the Surety on this bond will pay the same in an amount not exceeding the sum hereinabove specified in this bond; and, also, in case suit is brought upon this bond, said Surety will (and does hereby agree to) pay a reasonable attorney's fee, to be fixed and taxed as costs, and included in the judgment therein rendered.

This bond shall (and it is hereby made to) insure to the benefit of any and all persons entitled to file claims under Section 1192.1 of the Code of Civil Procedure of the State of California, so as to give a right of action to them or their assigns in any suit brought upon this bond, all as contemplated under the provisions of Section 4205 of the Government Code, and of Chapter 1 of Title 4 of Part 3 of the Code of Civil Procedure, of the State of California.

This bond is executed and filed in connection with said contract or agreement hereunto attached to comply with each and all of the provisions of the laws of the State of California above mentioned or referred to, and of all amendments thereto, and the obligors so intend and do hereby bind themselves accordingly.

LABOR AND MATERIAL BOND (CONTINUED)

The said Surety, for value received, hereby stipulates and agrees that no amendment, change, extension of time, alteration, or addition to said contract or agreement, or of any feature or item or items of performance required therein or thereunder, shall in any manner affect its obligations on or under this bond; and said Surety does hereby waive notice of any such amendment, change, extension of time, alteration, or addition to said contract or agreement, and of any feature or item or items of performance required therein or thereunder.

EXECUTED, SEALED AND DATED this _____ day of _____, 20_____

CORPORATE SEAL

PRINCIPAL:

BY _____

CORPORATE SEAL

SURETY:

BY _____

PUBLIC WORKS AGREEMENT

This PUBLIC WORKS AGREEMENT ("Agreement") is made and entered into as of _____, 201__ (the "Effective Date"), by and between the CITY OF TORRANCE, a municipal corporation ("CITY"), and _____ ("CONTRACTOR").

RECITALS:

A. The CITY wishes to retain the services of an experienced and qualified CONTRACTOR to construct **Insert Project Name & Bid #**;

B. In order to obtain the desired services, The CITY has circulated a Notice Inviting Bids for the construction of the Insert Project Name, Notice Inviting Bids No. B201X-12 (the "NIB"), Federal Project No. X; and

C. CONTRACTOR has submitted a Bid (the "Bid") in response to the NIB. CONTRACTOR represents that it is qualified to perform those services requested in the Plans and Specifications. Based upon its review of all Bids submitted in response to the NIB, The CITY is willing to award the contract to CONTRACTOR.

AGREEMENT:

1. SERVICES TO BE PERFORMED BY CONTRACTOR

CONTRACTOR will provide the services and install those materials listed in the Plans and Specifications, which are on file in the Public Works Department. The NIB and the Plans and Specifications are made a part of this Agreement. A copy of the Bid is attached as Exhibit A.

2. TERM

Unless earlier terminated in accordance with Paragraph 4 below, this Agreement will continue in full force and effect for one year from the Effective Date.

3. COMPENSATION

A. CONTRACTOR's Fee.

For services rendered pursuant to this Agreement, CONTRACTOR will be paid in accordance with CONTRACTOR's Bid; provided, however, that in no event will the total amount of money paid the CONTRACTOR, for services initially contemplated by this Agreement, exceed the sum of $_____ ("Agreement Sum"), unless otherwise first approved in writing by the CITY.

B. Schedule of Payment.

Provided that the CONTRACTOR is not in default under the terms of this Agreement, upon presentation of an invoice, CONTRACTOR will be paid monthly, within 30 days after the date of the monthly invoice.

4. TERMINATION OF AGREEMENT

A. Termination by CITY for Convenience.

1. CITY may, at any time, terminate the Agreement for CITY's convenience and without cause.

2. Upon receipt of written notice from CITY of such termination for CITY's convenience, CONTRACTOR will:

   a) cease operations as directed by CITY in the notice;
   b) take actions necessary, or that CITY may direct, for the protection and preservation of the work; and
   c) except for work directed to be performed prior to the effective date of termination stated in the notice, terminate all existing subcontracts and purchase orders and enter into no further subcontracts and purchase orders.

3. In case of such termination for CITY's convenience, CONTRACTOR will be entitled to receive payment for work executed; and costs incurred by reason of such termination, along with reasonable overhead and profit on the work not executed.

B. Termination for Cause.

1. If either party fails to perform any term, covenant or condition in this Agreement and that failure continues for 15 calendar days after the nondefaulting party gives the defaulting party notice of the failure to perform, this Agreement may be terminated for cause; provided, however, that if during the notice period the defaulting party has promptly commenced and continues diligent efforts to remedy the default, the defaulting party will have such additional time as is reasonably necessary to remedy the default.

2. In the event this Agreement is terminated for cause by the default of the CONTRACTOR, the CITY may, at the expense of the CONTRACTOR and its surety, complete this Agreement or cause it to be completed. Any check or bond delivered to the CITY in connection with this Agreement, and the money payable thereon, will be forfeited to and remain the property of the CITY. All moneys due the CONTRACTOR under the terms of this Agreement will be retained by the CITY, but the retention will not release the CONTRACTOR and its surety from liability for the default. Under these circumstances, however, the CONTRACTOR and its surety will be credited with the amount of money retained, toward any amount by which the cost of completion exceeds the Agreement Sum and any amount authorized for extra services.

3. Termination for cause will not affect or terminate any of the rights of the CITY as against the CONTRACTOR or its surety then existing, or which may thereafter accrue because of the default; this provision is in addition to all other rights and remedies available to the CITY under law.

C. Termination for Breach of Law.

In the event the CONTRACTOR or any of its officers, directors, shareholders, employees, agents, subsidiaries or affiliates is convicted (i) of a criminal offense as an

incident to obtaining or attempting to obtain a public or private contract or subcontract, or in the performance of a contract or subcontract; (ii) under state or federal statutes of embezzlement, theft, forgery, bribery, falsification or destruction of records, receiving stolen property, or any other offense indicating a lack of business integrity or business honesty which currently, seriously, and directly affects responsibility as a public consultant or contractor; (iii) under state or federal antitrust statutes arising out of the submission of bids or proposals; or (iv) of violation of Paragraph 19 of this Agreement; or for any other cause the CITY determines to be so serious and compelling as to affect CONTRACTOR's responsibility as a public consultant or contractor, including but not limited to, debarment by another governmental agency, then the CITY reserves the unilateral right to terminate this Agreement or to impose such other sanctions (which may include financial sanctions, temporary suspensions or any other condition deemed appropriate short of termination) as it deems proper. The CITY will not take action until CONTRACTOR has been given notice and an opportunity to present evidence in mitigation.

5. FORCE MAJEURE

If any party fails to perform its obligations because of strikes, lockouts, labor disputes, embargoes, acts of God, inability to obtain labor or materials or reasonable substitutes for labor or materials, governmental restrictions, governmental regulations, governmental controls, judicial orders, enemy or hostile governmental action, civil commotion, fire or other casualty, or other causes beyond the reasonable control of the party obligated to perform, then that party's performance shall be excused for a period equal to the period of such cause for failure to perform.

6. RETENTION OF FUNDS

CONTRACTOR authorizes the CITY to deduct from any amount payable to CONTRACTOR (whether or not arising out of this Agreement) any amounts the payment of which may be in dispute or that are necessary to compensate the CITY for any losses, costs, liabilities, or damages suffered by the CITY, and all amounts for which the CITY may be liable to third parties, by reason of CONTRACTOR's negligent acts or omissions or willful misconduct in performing or failing to perform CONTRACTOR's obligations under this Agreement. In the event that any claim is made by a third party, the amount or validity of which is disputed by CONTRACTOR, or any indebtedness exists that appears to be the basis for a claim of lien, the CITY may withhold from any payment due, without liability for interest because of the withholding, an amount sufficient to cover the claim. The failure of the CITY to exercise the right to deduct or to withhold will not, however, affect the obligations of CONTRACTOR to insure, indemnify, and protect the CITY as elsewhere provided in this Agreement.

7. THE CITY'S REPRESENTATIVE

The Public Works Director is designated as the "City Representative," authorized to act in its behalf with respect to the work and services specified in this Agreement and to make all decisions in connection with this Agreement. Whenever approval, directions, or other actions are required by the CITY under this Agreement, those actions will be taken by the City Representative, unless otherwise stated. The City Manager has the right to designate another City Representative at any time, by providing notice to CONTRACTOR.

8. CONTRACTOR REPRESENTATIVE(S)

The following principal(s) of CONTRACTOR are designated as being the principal(s) and representative(s) of CONTRACTOR authorized to act in its behalf with respect to the work specified in this Agreement and make all decisions in connection with this Agreement:

_____

_____

9. INDEPENDENT CONTRACTOR

The CONTRACTOR is, and at all times will remain as to the CITY, a wholly independent contractor. Neither the CITY nor any of its agents will have control over the conduct of the CONTRACTOR or any of the CONTRACTOR's employees, except as otherwise set forth in this Agreement. The CONTRACTOR may not, at any time or in any manner, represent that it or any of its agents or employees are in any manner agents or employees of the CITY. CITY has no duty, obligation, or responsibility to CONTRACTOR's agents or employees under the Affordable Care Act. CONTRACTOR is solely responsible for any tax penalties associated with the failure to offer affordable coverage to its agents and employees under the Affordable Care Act and any other liabilities, claims and obligations regarding compliance with the Affordable Care Act with respect to CONTRACTOR's agents and employees. CITY is not responsible and shall not be held liable for CONTRACTOR's failure to comply with CONTRACTOR's duties, obligations, and responsibilities under the Affordable Care Act. CONTRACTOR agrees to defend, indemnify and hold CITY harmless for any and all taxes and penalties that may be assessed against CITY as a result of CONTRACTOR's obligations under the Affordable Care Act relating to CONTRACTOR's agents and employees.

10. BUSINESS LICENSE

The CONTRACTOR must obtain a City business license prior to the start of work under this Agreement, unless CONTRACTOR is qualified for an exemption.

11. OTHER LICENSES AND PERMITS

CONTRACTOR warrants that it has all professional, contracting and other permits and licenses required to undertake the work contemplated by this Agreement.

12. FAMILIARITY WITH WORK

By executing this Agreement, CONTRACTOR warrants that CONTRACTOR (a) has thoroughly investigated and considered the scope of services to be performed, (b) has carefully considered how the services should be performed, and (c) fully understands the facilities, difficulties and restrictions attending performance of the services under this Agreement. If the services involve work upon any site, CONTRACTOR warrants that CONTRACTOR has or will investigate the site and is or will be fully acquainted with the conditions there existing, prior to commencement of services set forth in this Agreement. Should CONTRACTOR discover any latent or unknown conditions that will materially affect

the performance of the services set forth in this Agreement, CONTRACTOR must immediately inform the CITY of that fact and may not
proceed except at CONTRACTOR's risk until written instructions are received from the CITY.

13. CARE OF WORK

CONTRACTOR must adopt reasonable methods during the life of the Agreement to furnish continuous protection to the work, and the equipment, materials, papers, documents, plans, studies and other components to prevent losses or damages, and will be responsible for all damages, to persons or property, until acceptance of the work by the CITY, except those losses or damages as may be caused by the CITY's own negligence.

14. CONTRACTOR'S ACCOUNTING RECORDS; OTHER PROJECT RECORDS

Records of the CONTRACTOR's time pertaining to the project, and records of accounts between the CITY and the CONTRACTOR, will be kept on a generally recognized accounting basis. CONTRACTOR will also maintain all other records, including without limitation specifications, drawings, progress reports and the like, relating to the project. All records will be available to the CITY during normal working hours. CONTRACTOR will maintain these records for three years after final payment.

15. INDEMNIFICATION

CONTRACTOR will indemnify, defend, and hold harmless CITY, the Successor Agency to the Former Redevelopment Agency of the City of Torrance, the City Council, each member thereof, present and future, its officers, agents and employees from and against any and all liability, expenses, including defense costs and legal fees, and claims for damages whatsoever, including, but not limited to, those arising from breach of contract, bodily injury, death, personal injury, property damage, loss of use, or property loss however the same may be caused and regardless of the responsibility for negligence. The obligation to indemnify, defend and hold harmless includes, but is not limited to, any liability or expense, including defense costs and legal fees, arising from the negligent acts or omissions, or willful misconduct of CONTRACTOR, its officers, employees, agents, subcontractors or vendors. It is further agreed, CONTRACTOR's obligations to indemnify, defend and hold harmless will apply even in the event of concurrent negligence on the part of CITY, the City Council, each member thereof, present and future, or its officers, agents and employees, except for liability resulting solely from the negligence or willful misconduct of CITY, its officers, employees or agents. Payment by CITY is not a condition precedent to enforcement of this indemnity. In the event of any dispute between CONTRACTOR and CITY, as to whether liability arises from the sole negligence of the CITY or its officers, employees, agents, subcontractors or vendors, CONTRACTOR will be obligated to pay for CITY's defense until such time as a final judgment has been entered adjudicating the CITY as solely negligent. CONTRACTOR will not be entitled in the event of such a determination to any reimbursement of defense costs including but not limited to attorney's fees, expert fees and costs of litigation.

16. NON-LIABILITY OF THE CITY'S OFFICERS AND EMPLOYEES

No officer or employee of the CITY will be personally liable to CONTRACTOR, in the event of any default or breach by the CITY or for any amount that may become due to CONTRACTOR.

17. INSURANCE

A. CONTRACTOR must maintain at its sole expense the following insurance, which will be full coverage not subject to self insurance provisions:

1. Automobile Liability, including owned, non-owned and hired vehicles, with at least the following limits of liability:

   a. Combined single limits of $2,000,000 per occurrence.

2. General Liability including coverage for premises, products and completed operations, independent contractors, personal injury and contractual obligations with combined single limits of coverage of at least $3,000,000 per occurrence, with an annual aggregate of no less than $5,000,000.

3. Workers' Compensation with limits as required by the State of California and Employers Liability with limits of at least $3,000,000.

B. The insurance provided by CONTRACTOR will be primary and non-contributory.

C. CITY, the Successor Agency to the Former Redevelopment Agency of the City of Torrance, the City Council and each member thereof, members of boards and commissions, every officer, agent, official, employee and volunteer must be named as additional insureds under the automobile and general liability policies.

D. CONTRACTOR must provide certificates of insurance and/or endorsements to the City Clerk of the City of Torrance before the commencement of work.

E. Each insurance policy required by this Paragraph must contain a provision that no termination, cancellation or change of coverage can be made without thirty days notice to the CITY.

F. CONTRACTOR must include all subcontractors as insureds under its policies or must furnish separate certificates and endorsements for each subcontractor. All coverage for subcontractors will be subject to all of the requirements of this Paragraph 17.

18. SUFFICIENCY OF INSURERS

Insurance required by this Agreement will be satisfactory only if issued by companies admitted to do business in California, rated "B+" or better in the most recent edition of Best's Key Rating Guide, and only if they are of a financial category Class VII or better, unless these requirements are waived by the Risk Manager of the CITY ("Risk Manager") due to unique circumstances. In the event the Risk Manager determines that the work or services to be performed under this Agreement creates an increased or decreased risk of loss to the CITY, the CONTRACTOR agrees that the minimum limits of any insurance

policies and/or the performance bond required by this Agreement may be changed accordingly upon receipt of written notice from the Risk Manager; provided that CONTRACTOR will have the right to appeal a determination of increased coverage by the Risk Manager to the City Council of the CITY within 10 days of receipt of notice from the Risk Manager.

19. CONFLICT OF INTEREST

A. No officer or employee of the CITY may have any financial interest, direct or indirect, in this Agreement, nor may any officer or employee participate in any decision relating to the Agreement that effects the officer or employee's financial interest or the financial interest of any corporation, partnership or association in which the officer or employee is, directly or indirectly interested, in violation of any law, rule or regulation.

B. No person may offer, give, or agree to give any officer or employee or former officer or employee, nor may any officer or employee solicit, demand, accept, or agree to accept from another person, a gratuity or an offer of employment in connection with any decision, approval, disapproval, recommendation, preparation or any part of a program requirement or a purchase request, influencing the content of any specification or procurement standard, rendering of advice, investigation, auditing, or in any other advisory capacity in any way pertaining to any program requirement, contract or subcontract, or to any solicitation or proposal.

20. NOTICE

A. All notices, requests, demands, or other communications under this Agreement will be in writing. Notice will be sufficiently given for all purposes as follows:

1. Personal delivery. When personally delivered to the recipient: notice is effective on delivery.

2. First Class mail. When mailed first class to the last address of the recipient known to the party giving notice: notice is effective three mail delivery days after deposit in an United States Postal Service office or mailbox.

3. Certified mail. When mailed certified mail, return receipt requested: notice is effective on receipt, if delivery is confirmed by a return receipt.

4. Overnight delivery. When delivered by an overnight delivery service, charges prepaid or charged to the sender's account: notice is effective on delivery, if delivery is confirmed by the delivery service.

5. Facsimile transmission. When sent by fax to the last fax number of the recipient known to the party giving notice: notice is effective on receipt. Any notice given by fax will be deemed received on the next business day if it is received after 5:00 p.m. (recipient's time) or on a non-business day.

6. Addresses for purpose of giving notice are as follows:

CONTRACTOR: _____
_____
_____
_____
Fax: _____

CITY: City Clerk
City of Torrance
3031 Torrance Boulevard
Torrance, CA 90509-2970
Fax: (310) 618-2931

with a copy to: Attn: ENGINEERING MANAGER'S NAME
Public Works Department
City of Torrance
20500 Madrona Aveune
Torrance, CA 90503
Fax: (310)781-6902

B. Any correctly addressed notice that is refused, unclaimed, or undeliverable because of an act or omission of the party to be notified, will be deemed effective as of the first date the notice was refused, unclaimed or deemed undeliverable by the postal authorities, messenger or overnight delivery service.

C. Either party may change its address or fax number by giving the other party notice of the change in any manner permitted by this Agreement.

21. PROHIBITION AGAINST ASSIGNMENT AND SUBCONTRACTING

This Agreement and all exhibits are binding on the heirs, successors, and assigns of the parties. The Agreement may not be assigned or subcontracted by either the CITY or CONTRACTOR without the prior written consent of the other.

22. INTEGRATION; AMENDMENT

This Agreement represents the entire understanding of the CITY and CONTRACTOR as to those matters contained in it. No prior oral or written understanding will be of any force or effect with respect to the terms of this Agreement. The Agreement may not be modified or altered except in writing signed by both parties.

23. INTERPRETATION

The terms of this Agreement should be construed in accordance with the meaning of the language used and should not be construed for or against either party by reason of the authorship of this Agreement or any other rule of construction that might otherwise apply.

24. SEVERABILITY

If any part of this Agreement is found to be in conflict with applicable laws, that part will be inoperative, null and void insofar as it is in conflict with any applicable laws, but the remainder of the Agreement will remain in full force and effect.

25. TIME OF ESSENCE

Time is of the essence in the performance of this Agreement.

26. GOVERNING LAW; JURISDICTION

This Agreement will be administered and interpreted under the laws of the State of California. Jurisdiction of any litigation arising from the Agreement will be in Los Angeles County, California.

27. COMPLIANCE WITH STATUTES AND REGULATIONS

CONTRACTOR will be knowledgeable of and will comply with all applicable federal, state, county and city statutes, rules, regulations, ordinances and orders.

28. WAIVER OF BREACH

No delay or omission in the exercise of any right or remedy by a nondefaulting party on any default will impair the right or remedy or be construed as a waiver. A party's consent or approval of any act by the other party requiring the party's consent or approval will not be deemed to waive or render unnecessary the other party's consent to or approval of any subsequent act. Any waiver by either party of any default must be in writing and will not be a waiver of any other default concerning the same or any other provision of this Agreement.

29. ATTORNEY'S FEES

Except as provided for in Paragraph 15, in any dispute, litigation, arbitration, or other proceeding by which one party either seeks to enforce its rights under this Agreement (whether in contract, tort or both) or seeks a declaration of any rights or obligations under this Agreement, the prevailing party will be awarded reasonable attorney's fees, together with any costs and expenses, to resolve the dispute and to enforce any judgment.

30. EXHIBITS

All exhibits identified in this Agreement are incorporated into the Agreement by this reference.

31. CONTRACTOR'S AUTHORITY TO EXECUTE

The persons executing this Agreement on behalf of the CONTRACTOR warrant that (i) the CONTRACTOR is duly organized and existing; (ii) they are duly authorized to execute this Agreement on behalf of the CONTRACTOR; (iii) by so executing this Agreement, the CONTRACTOR is formally bound to the provisions of this Agreement; and (iv) the entering into this Agreement does not
violate any provision of any other Agreement to which the CONTRACTOR is bound.

CITY OF TORRANCE,
a Municipal Corporation

BUSINESS OR INDIVIDUAL NAME
A 12 corporation

_____
Frank Scotto, Mayor

By: _____
name, title

ATTEST:

_____
Sue Herbers, City Clerk

APPROVED AS TO FORM:

JOHN L. FELLOWS III
City Attorney

By: _____
Deputy City Attorney

Attachments: Exhibit A: Bid

EXHIBIT A

Bid

[To be attached]

CITY OF TORRANCE
CONSTRUCTION OR SERVICE CONTRACT ENDORSEMENT

To be attached to and made a part of all policies insuring the liability of any person, form or corporation performing services under contract for the City of Torrance.

Not withstanding any inconsistent expression in the policy to which this endorsement is attached, or in any other endorsement now or hereafter attached thereto, or made a part thereof, the protection afforded by said policy shall:

1. Include the City of Torrance as an additional insured. (To include the elected officials, appointed officials, and employees.)

2. Indemnify and save harmless the City of Torrance against any and all claims resulting from the undertaking specified in the contract known as:

PROPOSAL, SPECIFICATIONS, BOND AND AFFIDAVIT FOR THE CONSTRUCTION OF

Stormwater Basin Enhancement Project, CIP No. I-102

B2014-12

This hold harmless assumption on the part of the underwriters shall include all costs of investigation and defense, including claims based on damage to substructures not shown, not located on the plans, or shown incorrectly.

3. Not be cancelled except by notice to the City Attorney of the City of Torrance at least thirty (30) days prior to the date of cancellation.

4. Provide single limit for Bodily Injury Liability and Property Damage Liability combined, $1,000,000 each Occurrence, and $1,000,000 Aggregate.

5. Limited classifications, restricting endorsements, exclusions or other special provisions contained in the policy shall not act to limit the benefits of coverage as they shall apply to the City of Torrance as enumerated in this endorsement. However, nothing herein contained shall affect any rights of the insurer against the insured.

6. It is further expressly agreed by and between the parties hereto that the following two provisions, (a) and (b), are a part of this contract:

   (a) That the Contractor specifically agrees to comply with applicable provisions of Section 1777.5 of the Labor Code relating to the employment by contractor or subcontractor under it, of journeyman or apprentices, or workmen, in any apprenticeable craft or trade.

   (b) By my signature hereunder, as Contractor, I certify that I am aware of the provisions of Section 3700 of the Labor Code which requires every employer to be insured against liability for Workers' Compensation or to undertake self-insurance in accordance with the provisions of that code, and I will comply with such provisions before commencing the performance of the work of this contract.

The limits of liability as stated in this endorsement apply to the insurance afforded by this endorsement notwithstanding that the policy may have lower limits of liability applying elsewhere in the policy.

_____
Duly Authorized Agent

Attached to and forming part of
Policy No. _____
of the _____

Date: _____
Expiration Date:_____

WORKERS' COMPENSATION INSURANCE CERTIFICATION

In compliance with Section 7-4 of the Standard Specifications, the Contractor shall complete and submit the following certification with a Certificate of Insurance before execution of the contract.

I am aware of, and will comply with, Section 3700 of the Labor Code, requiring every employer to be insured against liability for Workers' Compensation or to undertake self-insurance before commencing any of the work.

_____
CONTRACTOR

By: _____

Title:_____

SECTION E

SPECIAL PROVISIONS

The following Special Provisions supplement and amend the Standard Specifications for Public Works Construction (latest edition) and the Standard Specifications of the State of California Department of Transportation (Caltrans), latest edition, as noted herein. These Special Provisions have been arranged into a format that parallels the Standard Specifications for Public Works Construction.

SECTION E - SPECIAL PROVISIONS

Table of Contents

PART 1 - GENERAL PROVISIONS 1

SECTION 1 - TERMS, DEFINITIONS, ABBREVIATIONS, UNITS OF MEASURE, AND SYMBOLS 1
1-2 DEFINITIONS. 1
1-3 ABBREVIATIONS 1
SECTION 2 - SCOPE AND CONTROL OF THE WORK 1
2-1 AWARD AND EXECUTION OF CONTRACT 1
2-3 SUBCONTRACTS 2
2-4 CONTRACT BONDS. 2
2-5. PLANS AND SPECIFICATIONS. 2
2-6 WORK TO BE DONE. 5
2-9 SURVEYING. 5
2-10 AUTHORITY OF BOARD AND ENGINEER. 6
2-11 INSPECTION. 6
SECTION 3 – CHANGES IN WORK 8
3-3 EXTRA WORK 8
SECTION 4 – CONTROL OF MATERIALS 9
4-1 MATERIALS AND WORKMANSHIP. 9
SECTION 5 – UTILITIES 10
5-1 LOCATION. 10
5-2 PROTECTION. 10
5-3 REMOVAL. 12
5-4 RELOCATION. 13
5-5 DELAYS. 13
SECTION 6 - PROSECUTION, PROGRESS AND ACCEPTANCE OF THE WORK 13
6-1 CONSTRUCTION SCHEDULE AND COMMENCEMENT OF WORK. 13
6-7 TIME OF COMPLETION. 15
6-8 COMPLETION, ACCEPTANCE AND WARRANTY. 16
6-9 LIQUIDATED DAMAGES. 16
6-11 SEQUENCE OF CONSTRUCTION. 16
SECTION 7 - RESPONSIBILITIES OF THE CONTRACTOR 16
7-2 LABOR. 16
7-3 LIABILITY INSURANCE. 17
7-4 WORKER'S COMPENSATION INSURANCE. 17
7-5 PERMITS. 17
7-6 THE CONTRACTOR'S REPRESENTATIVE. 18
7-8 WORK SITE MAINTENANCE. 18
7-9 PROTECTION AND RESTORATION OF EXISTING IMPROVEMENTS. 22
7-15 PROJECT CONSTRUCTION SIGNS AND PORTABLE CHANGEABLE MESSAGE SIGNS. 27
SECTION 9 - MEASUREMENT AND PAYMENT 27
9-1 MEASUREMENT AND PAYMENT. 27
9-2 LUMP SUM WORK. 28
9-3 PAYMENT. 28
9-4 CLAIMS. 30

PART 2 - CONSTRUCTION MATERIALS 31

SECTION 200 – ROCK MATERIALS. 31
200-1 ROCK PRODUCTS 31
200-2 UNTREATED BASE MATERIALS 31
SECTION 201 – CONCRETE, MORTAR, AND RELATED MATERIALS 32
201-2 REINFORCEMENT FOR CONCRETE 32
SECTION 202 – MASONRY MATERIALS 32

202-2 CONCRETE BLOCK 32
SECTION 203 - BITUMINOUS MATERIALS 34
203-6 ASPHALT CONCRETE. 34
SECTION 204 – LUMBER AND TREATMENT WITH PRESERVATIVES. 34
204-1 LUMBER AND PLYWOOD. 34
204-1.1.5 Cedar. 34
SECTION 206 – MISCELLANEOUS METAL ITEMS. 34
206-6 CHAIN LINK FENCE. 34
206-7 WROUGHT IRON FENCE. 38
206-8 TRENCH GRATE COVERS. 40
SECTION 207 – PIPE 40
207-9 IRON PIPE AND FITTINGS. 40
207-25 POLYVINYL CHLORIDE (PVC) PRESSURE PIPE 41
SECTION 210 – PAINT AND PROTECTIVE COATINGS 43
210-1 PAINT. 43
SECTION 212 – LANDSCAPE AND IRRIGATION MATERIALS 44
212-1 LANDSCAPE MATERIALS. 44
212-2 IRRIGATION SYSTEM MATERIALS 46
212-3 ELECTRICAL MATERIALS 47
212-4 RUSTIC LOG BENCHES 48
212-5 PET WASTE DISPENSER 48
SECTION 213 – ENGINEERING FABRICS 48
213-2 GEOSYNTHETICS. 48
SECTION 215 - RECLAIMED WATER FACILITIES 48
SECTION 217 - MISCELLANEOUS DRAINAGE FACILITIES 49
217-1 CURB OPENINGS AND GRATING CATCH BASINS. 49
217-2 CLEANING OF EXISTING CATCH BASINS. 51
217-4 AUTOMATIC RETRACTABLE SCREENS (ARS). 53
217-5 FLO-GARD® + PLUS CATCH BASIN FILTER INSERTS. 55
SECTION 218 – SIGNS. 56
218-1 INTERPRETIVE SIGNS. 56
218-2 NO PARKING SIGNS. 56
218-3 TEMPORARY INFORMATION SIGNS. 57

PART 3 - CONSTRUCTION METHODS 58

SECTION 300 – EARTHWORK 58
300-1 CLEARING AND GRUBBING. 58
300-2 UNCLASSIFIED EXCAVATION. 60
300-5 BORROW EXCAVATION 61
300-7 EARTHWORK FOR CHANNELS 61
SECTION 301 – TREATED SOIL, SUBGRADE PREPARATION, AND PLACEMENT OF BASE MATERIALS 63
301-2 UNTREATED BASE. 63
SECTION 302 – ROADWAY SURFACING 64
302-14 CONCRETE GRID PAVEMENTS. 64
SECTION 303 – CONCRETE AND MASONRY CONSTRUCTION 68
303-1 CONCRETE STRUCTURES. 68
303-2 AIR-PLACED CONCRETE. 68
303-4 MASONRY CONSTRUCTION 68
303-5 CONCRETE CURBS, WALKS, GUTTERS, CROSS GUTTERS, ALLEY INTERSECTIONS, ACCESS RAMPS, AND DRIVEWAYS. 70
SECTION 306 – UNDERGROUND CONDUIT CONSTRUCTION 70
306-1 OPEN TRENCH OPERATIONS 70
306-5 ABANDONMENT OF CONDUITS AND STRUCTURES. 78
SECTION 308 – LANDSCAPE AND IRRIGATION INSTALLATION 79
308-2 EARTHWORK AND TOPSOIL PLACEMENT. 79

308-2.3 Topsoil Preparation and Conditioning. 80
308-4 PLANTING 81
308-5 IRRIGATION SYSTEM INSTALLATION 84
308-6 MAINTENANCE AND PLANT ESTABLISHMENT. 87
308-7 GUARANTEE 88
308-8 PAYMENT 88
308-9 IRRIGATION PUMP SPECIFICATIONS 89
SECTION 310 - PAINTING 93
310-5 PAINTING VARIOUS SURFACES 93
SECTION 313 –INSTALLATION OF MISCELLANEOUS POTABLE WATER DISTRIBUTION SYSTEM MATERIALS 96
313-1 CONNECTIONS TO EXISTING POTABLE WATER MAINS. 96
313-2 INSTALLATION OF VALVES. 96
313-3 INSTALLATION OF AIR AND VACUUM RELEASE VALVES. 96
313-4 DISPLACEMENT TYPE - 3/4", 1", 1-1/2" AND 2" COLD WATER METERS. 97
SECTION 314 - RECLAIMED WATER FACILITIES INSTALLATION 97
314-1 CONNECTION TO EXISTING WBMWD RECLAIMED WATER LINES. 97
314-2 VALVE INSTALLATIONS. 97
314-3 BLOW-OFF ASSEMBLIES. 98
314-4 AIR RELEASE AND VACUUM VALVE ASSEMBLIES. 99
314-5 SERVICE INSTALLATIONS. 99
314-6 PRECAST VAULT, MANHOLE AND METER BOX INSTALLATION. 100
314-7 CONCRETE FOR THRUST BLOCKS, ANCHORS AND PIPE CRADELS. 100
SECTION 315 - PUMP STATION 101
315-1 GENERAL. 101
315-2 PRODUCTS. 102
315.3 EXECUTION. 108

PART 1 - GENERAL PROVISIONS

SECTION 1 - TERMS, DEFINITIONS, ABBREVIATIONS, UNITS OF MEASURE, AND SYMBOLS

1-2 DEFINITIONS. Add or redefine the following:

Agency – The City of Torrance, herein referred to as CITY.

Board – The City Council of the City of Torrance, herein referred to as City Council.

Engineer – The Public Works Director and/or City Engineer of the City of Torrance, acting either directly or through properly authorized agents, such agents acting within the scope of the particular duties entrusted to them.

Claim – A separate demand by the Contractor for (A) a time extension, (B) payment of money or damages arising from work done by or on behalf of the Contractor pursuant to the Contract and payment of which is not otherwise expressly provided for or the claimant is not otherwise entitled to, or (C) an amount the payment of which is disputed by the Agency.

1-3 ABBREVIATIONS

1-3.2 Common Usage.

Add the following abbreviations:

Approx	Approximate
ARHM	Asphalt rubber hot mix
CA	City Arborist
Exist.	Existing
L.A.C.D.P.W.	Los Angeles County Department of Public Works
Med.	Median
M.L.	Main Line
OH	Overhead
Ped.	Pedestrian
Reconst.	Reconstruct
Temp.	Temporary
Theo.	Theoretical
WM	Wire mesh or water meter

SECTION 2 - SCOPE AND CONTROL OF THE WORK

2-1 AWARD AND EXECUTION OF CONTRACT. Replace the entire subsection with the following:

Within ten (10) working days after the date of the CITY'S award of contract, the Contractor shall execute and return all Contract Documents required by the CITY. The CITY reserves the right to terminate the award if the above requirement is not met. Such termination will result in the forfeiture of the Proposal Guaranty.

The Contract shall not be considered binding upon the CITY until executed by the authorized CITY officials.

2-1.1 Contractor Meetings. Amend the following section

The Contractor is to attend two public meetings after CITY awards the contract and before the Notice to Proceed date.

2-3 SUBCONTRACTS

2-3.2 Self Performance. Replace the second sentence with the following:

The following work will be considered as "Specialty Items":

Design of Interpretative Signs at Entradero Basin and Henrietta Basin

2-4 CONTRACT BONDS. Revise the second sentence of the fourth paragraph to read as follows:

The "Performance Bond" shall remain in effect for one year following the date specified in the Notice of Completion or, if no Notice of Completion is recorded, for one year following the date of final acceptance by the Engineer.

2-5. PLANS AND SPECIFICATIONS.

2-5.1 General. Add the following sentence to the first paragraph to read as follows:

The Contractor shall maintain a control set of Plans and Specifications on the Work site at all times. All final locations determined in the field, and any deviations from the Plans and Specifications, shall be marked in red on this control set to show as-built conditions. Upon completion of the Work, the Contractor shall submit the control set to the Engineer for approval. Final payment will not be made until this requirement is met.

Add the following subsections:

2-5.1.1 Plans. Included as part of the Contract Documents are the following, which show the location, character, dimensions or details of the Work:

1) Project Plans

The existing utility information and data provided with the Contract Documents are based on existing plans and documents. The plans and data are provided for information only. The Owner does not guarantee their accuracy and correctness. If the Bidder in preparing the Bid Proposal uses this information, the Bidder assumes all risks resulting from conditions differing from the information shown. The Bidder, in consideration for the information being provided, hereby releases the Owner and Consulting Engineer from any responsibility of obligation as to the accuracy of such information or for any additional compensation for work performed due to assumptions based on the use of such information.

2) Standard Plans

a. City of Torrance Standard Plans, latest edition

b. Standard Plans for Public Works Construction, latest edition, promulgated by Public Works Standards, Inc.

c. Standard Plans of the State of California Department of Transportation (Caltrans), latest edition

d. Standard Plans of the Los Angeles County Department of Public Works, latest edition

e. American Water Works Association Standards, latest edition.

f. Applicable Standard Plans and information for this project are included in the Appendices of these Specifications.

Applicable Standard Plans for this project are included in these Specifications, for reference.

2-5.1.2 Specifications. The Work shall be performed or executed in accordance with these Special Provisions and the following:

1) Standard Specifications for Public Works Construction, latest edition and supplements thereto, hereinafter referred to as the Standard Specifications, as written and promulgated by Public Works Standards, Inc. The Standard Specifications are published by BNi Building News, Inc., 1612 South Clementine Street, Anaheim, CA 92802, Phone: (800) 873-6397.

2) Sections 56-2, 84, 85, 86 and 90-10 of the State of California Department of Transportation (Caltrans) Standard Specifications, latest edition

3) American Water Works Association Standards, latest edition.

2-5.2 Precedence of Contract Documents. Replace the entire subsection with the following:

If there is a conflict between any of the Contract Documents, the document highest in precedence shall control. The order of precedence shall be as follows:

1) Permits issued by other agencies.
2) Change Orders (including Plans and Specifications attached thereto).
3) Public Works Agreement
4) Addenda
5) Special and General Provisions
6) Plans
7) City Standard Plans
8) Other Standard Plans
9) Standard Specifications for Public Works Construction
10) Reference Specifications

With reference to the Plans/Drawings, the order of precedence is as follows:

1) Change Order plans govern over Addenda and Contract plans
2) Addenda plans govern over Contract plans
3) Contract plans govern over standard plans
4) Detail plans govern over general plans
5) Figures govern over scaled dimensions

Within the Specifications, the order of precedence is as follows:

1) Change Orders
2) Permits from other agencies/Supplemental Agreements
3) Special Provisions
4) Instruction to Bidders
5) Referenced Standard Plans
6) Referenced Standard Specifications

If the Contractor, in the course of the Work, becomes aware of any claimed errors or omissions in the Contract Documents or in the CITY's fieldwork, the Contractor shall immediately inform the Engineer. The Engineer shall promptly review the matter, and if the Engineer finds an error or omission has been made the Engineer shall determine the corrective actions and advise the Contractor accordingly. If the corrective work associated with an error or omission increases or decreases the amount of work called for in the Contract, the CITY shall issue an appropriate Change Order in accordance with 3-3. After discovery of an error or omission by the Contractor, any related work performed by the Contractor shall be done at the Contractor's risk unless authorized by the Engineer.

2-5.3 Submittals

2-5.3.2 Working Drawings. Add the following:

In addition to the shop drawings required per Table 2-5.3.2 (A), the following shop drawings are required:

Item	Subsection Number	Title	Subject
16	304-2.1	General	Metal Hand Railings
17	207-9.2	Ductile Iron Pipe for Water and Other Liquids	General, Pipe Joints, Fittings

2-5.3.3 Shop Drawings. Add the following:

The following shop drawings are required:

1) Automatic Retractable Screens (ARS)
2) FloGard® + Plus catch basin filter inserts
3) Shoring plan
4) Flex-A-Mat or approved equal details per 300-7.5
5) Metal hand railings
6) Reinforced concrete box
7) Storm drain bypass
8) Wrought iron fence

2-5.3.4 Supporting Information. Modify the second paragraph as follows:

Submittals are required for the following:

1) Construction Schedule per 6-1
2) List of subcontractors per 2-3.2
3) List of materials per 4-1.4
4) Certifications per 4-1.5
5) Confined space entry program per 7-10.4.4
6) All concrete shall have mix designs and curing method per 201-1.1, 201-6.1.1 prepared, signed, and sealed by a Civil Engineer registered in the State of California.
7) All asphalt concrete shall have mix designs per 203-6.2 prepared, signed, and sealed by a Civil Engineer registered in the State of California.
8) Crushed Miscellaneous Base
9) Sifting machine
10) Haul Route and Export Disposal Location
11) Weirs and Shotcrete color
12) Concrete masonry unit color
13) Pre and post construction survey monument ties
14) Traffic Control Plans per 7-10.3 prepared, signed, and sealed by a Civil Engineer registered in the State of California.
15) Dust Control Plan
16) Jobsite Safety Plan
17) All necessary data and details including, but not limited to, catalog sheets, manufacturer's brochures, technical bulletins, specifications, diagrams, product sample and testing reports for any material, product, or work requiring Engineers approval by the specification.
18) Ductile iron pipe, fittings and appurtenances
19) Pavement fabric, geotextile and crack sealer

20) Detailed schedule for "IMPLEMENTATION OF THE SWPPP" per 7-8.6.3 and 9-2
21) Operation and maintenance manuals for all equipment, by basin, in 3-ring binders
22) Manufacturer's parts catalog showing part numbers for procurement of replacement parts
23) Electrical and mechanical components and systems
24) All written manufacturer's warranties
25) Pump operation control schematic
26) Pump manufacturer's technical data including station capacities and operating characteristics.
27) NOx reduction plan per 7-8.2.3
28) Spill Prevention and Emergency Response Plan per 7-8.5.3
29) Reinforcement steel
30) Rip rap per 200-1.6
31) Interpretive sign per 218-1
32) Keystone wall per 202-2.4 and 303-4.3
33) Amie Basin by-pass/dewatering plan per 306-1.1.8

The Contractor shall prepare each submittal and have them approved prior to the start of each activity. The Contractor will have 5 working days to provide the Agency-requested revisions to the plan if revisions are required.

In addition to the above, submittals may be required for any product, manufactured item, or system not specifically listed above.

2-6 WORK TO BE DONE. Add the following:

The Work generally consists of the construction of wetlands at two City of Torrance basins and an infiltration basin at the third basin as shown on City of Torrance Plan Nos. SD-500 (sheets 1 through 111); associated wetlands planting and landscaping, irrigation systems, fencing, pumps, culvert, trail enhancements, weirs, concrete gutters, benches and signage and all other incidental work in this specification document.

The work generally consists of grading, planting, concrete and asphalt paving, construction of trails, weirs, headwalls, and drainage facilities, installation of fencing and proper signage, and any other incidental work to complete the construction of the Stormwater Basin Enhancement Project.

The Cost of all work necessary for the completion of a particular item shall be included in the price bid for the item unless the work is specifically included in another item. **In addition, the price bid for the project shall include all costs to construct the project in accordance with the Plans and Specifications. If there is no bid item for a particular item of work, full compensation for such work shall be considered as included in the prices bid for other related items of work.**

2-9 SURVEYING.

2-9.1 Permanent Survey Markers

Delete the first sentence in the first paragraph. Substitute the following for the last sentence in the first paragraph:

Replacement, if required shall be done by the Contractor utilizing a licensed land surveyor, or registered Civil Engineer licensed by the State of California and authorized to conduct boundary survey work.

2-9.2 Survey Service. Replace the entire subsection with the following:

All construction surveying necessary to complete the Work shown on the Plans and provided in these Contract Documents shall be accomplished by or under the direction of a Registered Land Surveyor or Registered Civil Engineer authorized to practice land surveying in the State of California, retained or provided by the Contractor. The CITY reserves the right to direct additional construction survey work be performed at

no additional cost when the City determines it is required to adequately construct the Work.

The Contractor shall notify the Engineer in writing at least 2 working days prior to the actual survey. The Contractor shall provide the traffic control necessary for construction surveying.

Stakes shall be set and stationed by the Contractor for all grading pads, weirs, access ramps, access trails, driveways, headwalls and wingwalls, storm drains, catch basin, rough grade, and other items as necessary. A corresponding cut or fill to finished grade (or flow line) shall be indicated on a grade sheet. A copy of each grade sheet shall be furnished to the Engineer. If any construction survey stakes are lost or disturbed and need to be replaced, such replacement shall be by the Contractor at its expense.

Construction stakes shall consist of the following:

a. Offset line and grade stakes for gravity sewer at 50-foot intervals with grade sheets indicating cut to the pipe invert.

b. One set of paving stakes.

c. Pipe heading checks for line and grade at each manhole.

The Contractor shall submit to the City within 2 days after completion of each respective survey, setting of each stake and heading check a copy of the survey notes and calculations certified by the licensed Land Surveyor for the following:

a. Level and horizontal control circuit for survey control.

b. Grade sheets for pipeline stakes.

c. Pipe heading checks.

All costs for construction survey staking including construction staking, professional services, office calculations, furnishing all labor, materials, equipment, tools and incidentals, and for doing all work involved shall be considered as included in the price for which such work is appurtenant thereto, and no additional allowance will be made therefor.

Payment for construction surveying shall be on a lump sum basis per the Contract Unit Price. When the Contract does not include a pay item for construction surveying as specified above, and unless otherwise provided in these Special Provisions, full compensation for construction surveying required to complete the Work shall be included in the bid price for the appurtenant items of work.

2-10 AUTHORITY OF BOARD AND ENGINEER. Add the following:

Failure of the Contractor to comply with the requirements of the Contract Documents, or to follow the directions of the Engineer, and/or to immediately remedy such noncompliance or to follow directions, may, upon notice from the Engineer, result in the suspension of the Contract monthly progress payments. Any monthly progress payments so suspended may remain in suspension until the Contractor is in compliance with the Contract Documents and the directions of the Engineer, as determined by the Engineer.

2-11 INSPECTION. Replace the entire subsection with the following:

The Work is subject to inspection and approval by the Engineer. The Contractor shall notify the Engineer a minimum of 48 hours in advance of the required inspection.

The Engineer will make, or have made, such inspections and tests as he deems necessary to see that the Work is in conformance with the Contract Documents. In the event such inspections or tests reveal noncompliance with the Contract Documents, the Contractor shall bear the cost of such corrective measures

as deemed necessary by the Engineer, as well as the cost of subsequent re-inspection and re-testing.

Work done in the absence of inspection by the Engineer may be required to be removed and replaced under the inspection of the Engineer, and the entire cost of removal and replacement, including the cost of all materials which may be furnished by the CITY and used in the work thus removed, shall be borne by the Contractor, regardless of whether the work removed is found to be defective or not. Work covered without the approval of the Engineer shall, if so directed by the Engineer, be uncovered to the extent required by the Engineer, and the Contractor shall similarly bear the entire cost of performing all the work and furnishing all the materials necessary for the removal of the covering and its subsequent replacement, including all costs for additional inspection.

The Engineer and any authorized representatives shall at all times have access to the Work during its construction at shops and yards as well as the Work site. The Contractor shall provide every reasonable facility for ascertaining that the materials and workmanship are in accordance with the Contract Documents.

Inspection of the Work shall not relieve the Contractor of the obligation to fulfill all conditions of the Contract.

Add the following subsections:

2-11.1 Special Inspection Fees. If the Contractor elects to work under this Contract more than 8 hours/day or more than 40 hours/week, Saturday, Sunday, or CITY holidays, the Contractor shall arrange with the Engineer for the required inspection service and pay the Special Inspection Fees which will be charged at the following rates:

Mondays through Fridays	-	$100.00 per hour
Saturdays, Sundays, Holidays	-	$1,000.00 per day

Fees may be deducted from payments due to the Contractor at the discretion of the Engineer.

If the Contractor works under this contract at times other than within the allowed working hours without permission from or prior arrangement with the Engineer, the Contractor will be charged a lump sum amount of $500.00 for each occurrence, in addition to the above fees. The amount will be deducted from a Progress Payment.

2-11.2 General Requirements. The Contractor shall comply with the following requirements:

1) No excavation or open trench may be backfilled without first securing Health Department approval. If any piping, reclaimed or potable, is installed prior to plan check approval and/or inspection, all or any portion of the system may be required to be exposed and corrected as necessary.

2) Unused or abandoned potable water lines are to be severed as close to water mains as practical, capped, and a 10-foot section of abandoned line removed and cemented under Health Department supervision.

3) A dye or pressure test must be utilized to confirm the physical separation of the reclaimed and potable water system. Said testing shall be performed in conjunction with the Water Department and the Health Department and conducted before the introduction of reclaimed water.

2-11.3 Inspections During Construction. During the construction, the Contractor shall make the Work site available for periodic inspections by the regulatory agencies. These agencies may include: Los Angeles County Department of Health Services, Los Angeles Regional Water Quality Control Board, the State of California Department of Health Services Drinking Water Field Operations Branch, and CITY Water Department.

2-11.4 Material Inspection/Testing and other City Expenses.

(a) If a City subcontractor hired to perform material inspection and/or testing is required to work additional time to perform inspection and testing as a result of an action or delay caused by the Contractor, except for specific work allowed by the Engineer, the City subcontractor may charge the City an additional fee. The Engineer may deduct the additional fee for said inspection and testing from a Progress Payment to the Contractor. The Engineer also may deduct the cost to perform additional testing when an initial test fails to meet the requirements of this Contract. The typical rates for material testing and inspection are available upon request from the Public Works Department.

(b) If the Contractor does not comply with a requirement of these Special Provisions or if it does not immediately respond, after being informed, to a request by the Engineer to amend a site condition that jeopardizes the public health, safety or welfare, the Engineer may direct City staff to perform the work. For each occurrence, the City will charge the Contractor a base charge in the amount of $750 in addition to all costs incurred by the City for administration, labor, equipment and materials. The standard rates for City staff are available upon request from the Public Works Department.

(c) For each sign, drum, delineator, cone, barricade, warning device, or other type of required traffic control device that is not provided by the Contractor when required by the Traffic Control Plans, the Engineer may deduct $75 per day for each missing device from a Progress Payment. The Engineer, a City designate, or Public Works Inspector will inform the Contractor The deduction does not apply to a device that is fraudulently removed by non-construction personnel.

(d) Temporary lane closures maintained prior to 8:30 A.M. and/or after 3:30 P.M. may have a negative economic effect on the local residential, commercial or industrial community. Unless a temporary lane closure is otherwise authorized, the Engineer may deduct a fee from a Progress Payment for each temporary lane closure maintained prior to 8:30 A.M. or after 3:30 P.M. The fee will be assessed at a rate of $700 per each travel lane per each thirty (30) minute interval, or fraction thereof.

SECTION 3 – CHANGES IN WORK

3-3 EXTRA WORK

3-3.1 General. Add the following:

Payment for additional work and all expenditures in excess of the Contract Price must be authorized in writing by the Engineer. Such authorization shall be obtained by the Contractor prior to engaging in additional work. It shall be the Contractor's sole responsibility to obtain written approval from the Engineer for any change(s) in material or in the work proposed by suppliers or subcontractors. No payment shall be made to the Contractor for additional work which has not been approved in writing, and the Contractor hereby agrees that it shall have no right to additional compensation for any work not so authorized.

The Contractor shall be responsible to provide all data and to obtain all approvals required by the Specifications, including submittal of Daily Extra Work Reports. No claims or extras shall be approved by the Engineer unless all work was done under the direction of and subject to the approval of the Engineer. Disputed work claims shall comply with 3-3 as modified herein.

3-3.2.1 Basis for Establishing Costs. Replace the second paragraph of part (c) with the following:

The Contractor will be paid for the use of equipment at the lower of the actual rental rates paid by the Contractor or the rental rates listed for such equipment in either the "Rental Rate Blue Book" published by

Dataquest, Inc., 1290 Ridder Park Drive, San Jose, California 95131; telephone (408) 971-9000 or the California Department of Transportation publication entitled "Labor Surcharge and Equipment Rates" available at the Caltrans web site, www.dot.ca.gov/hq/eqsc/inforesources.htm , which is in effect on the date upon which the work is accomplished, and that hereby is made a part of the Contract, regardless of ownership or any rental or other agreement, if such may exist, for the use of such equipment entered into by the Contractor. If it is deemed necessary by the Engineer to use equipment not listed in the said publication, a suitable rental rate will be established by the Engineer. The Contractor may furnish any cost data that might assist the Engineer in the establishment of such rental rate.

3-3.2.3 Markup. Replace the entire subsection with the following:

The markups mentioned hereinafter shall include, but are not limited to, all costs for the services of superintendents, project managers, timekeepers and other personnel not working directly on the change order, and pickup or yard trucks used by the above personnel. These costs shall not be reported as labor or equipment elsewhere except when actually performing work directly on the change order and then shall only be reported at the labor classification of the work performed.

(a) Work by Contractor. The following percentages shall be added to the Contractor's costs and shall constitute the mark-up for all overhead and profit, which shall be deemed to include all items of expense not specifically designated as cost or equipment rental in Subsections 3-3.2.2(a), 3-3.2.2(b), and 3-3.2.2(c).

Labor	20
Materials	15
Equipment Rental	15
Other Expenditures	15

To the sum of the costs and markups provided for in this subsection, one (1) percent shall be added as compensation for bonding.

(b) Work by Subcontractor. When any part of the extra work is performed by a subcontractor, the markup established in 3-3.2.3(a) shall be applied to the subcontractor's actual cost of such work. A markup of ten (10) percent on the first $5,000 of the subcontracted portion of the extra work and a mark-up of 5 percent on work added in excess of $5,000 of the subcontracted portion of the extra work may be added by the Contractor.

The markups specified in parts (a) and (b) above shall be considered as including, but not limited to, the Contractor's labor costs for personnel not working directly on the extra work, including the cost of any tools and equipment that they may use. Such costs shall not be reported as labor or equipment costs elsewhere except when they are actually used in the performance of the extra work. Labor costs shall in that case be reported for the labor classification corresponding to the type and nature of extra work performed.

SECTION 4 – CONTROL OF MATERIALS

4-1 MATERIALS AND WORKMANSHIP.

4-1.1 General.

Add the following paragraph after the second paragraph:

If the work, or any portion thereof, shall be damaged in any way, or if any defective materials or faulty workmanship shall be discovered at any time prior to the final payment, the Contractor shall forthwith, at its own cost and expense, repair said damage, or replace such defective materials, or remedy such faulty workmanship in a manner satisfactory to the Engineer.

4-1.2 Protection of Work and Materials.

Add the following:

The Contractor shall assume all risks and expense of interference and delay in his operations, and the protection from or the repair of damage to improvements being built under the contract, as may be caused by water of whatever quantity from floods, storms, industrial waste, irrigation, underground or other sources. However, the Contractor shall be entitled to an extension of time in accordance with the provisions of Subsection 6-6. The Contractor shall also assume full responsibility and expense of protecting, or removing and returning to the site of Work, all equipment or materials under his care endangered by any action of the elements.

Furthermore, the Contractor shall indemnify and hold the City harmless from all claims or suits for damages arising from his operations in dewatering the Work and control of water.

SECTION 5 – UTILITIES

5-1 LOCATION. Add the following:

The Contractor shall provide coordination with all the utility companies involved and shall provide protection from damage to their facilities. The Contractor shall be responsible for repair or replacement to said facilities made necessary by its failure to provide required protection. The Contractor is required to include utility requirements in the Construction Schedule per Section 6-1.

The Contractor shall utilize the services of "Underground Service Alert-Southern California" for utility locating in all public right-of-ways by calling 1-800-227-2600 at least 48 hours prior to any excavation.

The new piping shall go over or under the existing utilities as indicated on the plans. Where not indicated, the Contractor shall assume that the new piping will cross under the existing utility. The Contractor shall pothole existing utilities as shown on the plans, as directed by the Engineer or as deemed necessary by the Contractor. The cost of potholing herein specified shall be included in the prices paid for other items of work and no additional compensation will be allowed.

Where pressured lines exist, at each angle point, cross connection and "T" connection, the Contractor, for bidding purposes, shall assume the existence of a concrete thrust block located such as to resolve thrust loads. Any and all costs resulting from the existence of a thrust block, including costs for its removal and restoration if required, shall be deemed as being included in the prices bid for the various items of work.

Underground lines that are potentially hazardous such as oil company lines, natural gas mains, and electrical conduits will be carefully located by the owner as provided in the Standard Specifications. The Contractor shall take special precautions in determining the precise location and depth of these structures to insure that they will not be damaged by its operations.

Substitute the following for the last paragraph:

Prior to starting construction, the Contractor shall be responsible to determine the location and depth of all utilities which have been marked by the respective owners and which may affect or be affected by its operations. The Contractor also shall determine the location and depth of each service connection, whether or not marked. Full compensation for such work shall be considered as included in the prices bid for other items or work. If a utility which was marked or a service connection is found to interfere with the work after construction has commenced, the Contractor shall be solely responsible for all costs of any delay and for any costs which could have been avoided if the Contractor had located the utility prior to start of construction.

5-2 PROTECTION. Add the following:

If, in the course of construction, the Contractor damages a sewer lateral or water lateral, the Contractor

shall be responsible to completely expose said lateral from the main line to the point of connection at private property to verify integrity of all joints to the satisfaction of the Engineer. This shall not be considered extra work and no extra costs shall be allowed.

Sewers, including lateral repairs, shall be constructed of Vitrified Clay Pipe, unless otherwise approved in writing by the Engineer.

Add the following after the final paragraph:

As noted in subsections 5-2.1, 5-2.2 and 5-2.3 utilities are classified and are to be handled in one of three ways by the Contractor in the course of performing the contract.

5-2.1 Noninterfering Utilities

Utilities that are not abandoned by the owner and do not physically interfere with the permanent work in its final location shall be supported, protected and maintained in place by the Contractor, and the Contractor shall be solely responsible for any damage, loss or injury, or death resulting from his/her failure to do so and the Contractor shall indemnify and hold harmless the City from any and all such consequences. Noninterfering utilities may, with the permission of the owner and the Public Works Director, be relocated still farther from the permanent work in its final locations, but the Contractor shall not so consider, in submitting his bid, unless the relocation is shown on the plans.

5-2.2 Abandoned Utilities

Abandoned utilities are those portions of any utility which are no longer needed or desired by the owner and whose destruction is consented to by the owner and/or is permitted by notation on the plans. Abandoned utilities which physically interfere with the permanent work or with the construction thereof shall be removed by the Contractor and the Contractor shall be solely responsible for any damage, loss or injury, or death resulting from the removal and the Contractor shall indemnify and hold harmless the City from any and all such consequences.

5-2.3 Interfering Utilities

Any utility shall be deemed an interfering utility (1) which physically occupies any part of the space to be occupied by the permanent work in its final locations, or (2) whose length within the theoretical width of excavation for the permanent work exceeds five times the width of said theoretical excavation whether or not the utility physically interferes with the permanent work. Interfering utilities that are not abandoned by the owner shall be relocated so as not to interfere with the permanent work in its final location. Such relocation will be performed by the owner or the City unless otherwise shown on the plans.

The Contractor shall exercise caution to prevent damage to or movement of the utilities while constructing the permanent work along and adjacent to the utilities.

Should any manhole extend within a trench excavation, the Contractor shall choose one of the following methods of construction and shall assume all responsibilities thereof:

(1) Support and maintain the manholes in place during the construction of the permanent work in open cut.

(2) Remove the shaft and maintain the base of the manhole in place until the backfill is placed and compacted; then reconstruct the manhole shaft.

(3) Use another method of construction which has been submitted to and approved by the Engineer. All costs for the work pertaining to the manholes that might be found to extend partially within the excavation limits or any protective measures required due to the proximity of the manholes and the permanent work at these locations shall be absorbed in the prices bid

for the various items of work.

5-2.4 Protection of Underground Hazardous Utilities. This Subsection shall apply to projects where there are underground utilities within the Work area which may be potentially hazardous if damaged. A hazardous substance shall be defined as one having the potential for an immediate disaster such as, but not limited to, gasoline, electricity, fuel oil, butane, propane, natural gas, chlorine or other chemicals.

Abandoned or inoperative utilities designed to carry hazardous substances and unidentified or unknown utilities shall be considered hazardous until determined otherwise. Whenever the Contractor is directed by the Engineer to tap these lines, the Contractor shall provide personnel specialized in this work and payment therefore will be considered as extra work per 3-3 of these Special Provisions.

The Contractor shall comply with the following requirements when working around underground hazardous utilities:

1) The Contractor shall not trench or excavate within the area where a utility known to carry a hazardous substance exists until its location has been determined by excavation or other proven methods acceptable to the Engineer. The intervals between exploratory excavations or location points shall be sufficient to determine the exact location of the line. Unless otherwise directed by the Engineer, excavation for underground hazardous utilities shall be performed by the Contractor and paid for as specified per 5-1 of these Special Provisions.

2) If it is determined that the horizontal or vertical clearance between the utility known to carry hazardous substances and the construction limit is less than 300 mm (12 inches) (450mm (18 inches) if scarifying), the Contractor shall confer with its owner. Unless the owner elects to relocate the line or take it out of service, the Contractor shall not excavate until the line has been completely exposed within the limits of construction.

3) Once the physical location of the utility known to carry hazardous substances has been determined, the Contractor, in cooperation with and with the concurrence of the utility owner, shall determine how to protect and/or support the utility from damage before proceeding with the Work.

4) During all excavation and trenching operations, the Contractor shall exercise extreme caution and protect the utilities from damage.

5) The Contractor shall notify the Engineer, the public agency maintaining records for the jurisdiction in which the Project is located and the owner, if known, whenever previously unidentified or unknown underground utilities are encountered so that the location can be accurately established and made a part of permanent substructure records.

Full compensation for protecting underground hazardous utilities as specified or noted on the Plans shall be considered as included in the prices bid for the various items of work.

5-3 REMOVAL.

Add the following:

It shall be the Contractor's responsibility irrespective of the notations on the plans to confirm or determine that a utility is to be abandoned before treating the same as an abandoned utility and shall assume all risks in so determining. All removals or relocations of existing utilities shall be coordinated with the owner of said utility. No removals or relocations of existing utilities shall commence prior to approval of said utility.

5-4 RELOCATION.

Add the following:

Water meters shall be relocated by Contractor per City of Torrance Standard Plan T703 or T704 as directed by the Engineer.

Water valves shall be relocated by the Contractor per City of Torrance Standard Plan T712.

Substitute the following for the last paragraph:

For the purpose of these specifications, service connections shall be construed to mean all, or any portion of, the pipe, conduit, cable, or duct which connects a utility main distribution line to the meter of an individual user, and further, shall include the meter and such portions of said pipe, conduit, cable or duct on the user's side of the meter which affect the contract work or its prosecution.

The Contractor shall be responsible for the alteration or permanent relocation of sewer connections and water laterals, unless otherwise approved by the Engineer.

In instances where the alteration or permanent relocation of interfering service connections can be avoided by encasing same in the slabs or walls of poured-in place concrete structures the Contractor shall, when directed by the Engineer, so encase such service connections, and any costs for such work shall be absorbed in the unit prices or included in the lump sum amounts bid for the various items of work.

5-5 DELAYS.

Substitute the following:

If the contractor while performing the contract discovers utility facilities not identified by the public agency in the contract plans or specifications, he shall immediately notify the City and utility in writing. The Contractor shall not be entitled to damage or additional payment, nor shall it be entitled to standby time for labor if a delay does occur. The Contractor also shall not be entitled to damage or additional payment for equipment not on the project during the occurrence of the event that caused the related delay. The Engineer will determine the extent of the delay attributable to such interferences, the affect of the delay on the project as a whole, and any commensurate extension of time.

Any failure of the City and/or utility company to accomplish relocations in a reasonable manner in light of the Contractor's operations (to the extent such operations would otherwise be feasible and in accordance with the contract and as disclosed to the City prior to the Contractor encountering any such utility) shall entitle the Contractor to an extension of contract time to the extent that, in the judgment of the Engineer, the Contractor's completion of the overall contract work has been delayed; however, the Contractor shall be entitled to no other remedy and, in submitting its bid, thereby waives such other remedies, if any, unless the relocation delay is the result of arbitrary, capricious or malicious conduct by the City.

SECTION 6 - PROSECUTION, PROGRESS AND ACCEPTANCE OF THE WORK

6-1 CONSTRUCTION SCHEDULE AND COMMENCEMENT OF WORK. Replace the entire subsection with the following:

6-1.1 Construction Schedule

Within ten (10) working days after the date of the CITY's execution of the Contract, the Contractor shall submit a proposed construction schedule to the Engineer for approval. The schedule shall be in accordance with 6-1.2 and 6-1.3 and shall be in sufficient detail to show chronological relationship of all activities of the Work. These include, but are not limited to: estimated starting and completion dates of various activities,

submittal of shop drawings to the Engineer for approval, procurement of materials and scheduling of equipment.

Prior to issuing the Notice to Proceed, the Engineer will schedule a Pre-Construction Meeting with the Contractor to review the proposed construction schedule and delivery dates, arrange utility coordination and clarify inspection procedures.

Prior to starting any Work, the Contractor shall attend a Community Meeting to be scheduled by the Engineer. The meeting, to be held in the evening, will address the residents' questions and concerns regarding the Work, what can be expected during construction and vehicular and pedestrian access that may be temporarily restricted during construction.

Notwithstanding any other provisions of the Contract, the Contractor shall not be obligated to perform any work and the CITY shall not be obligated to accept or pay for any work performed by the Contractor prior to delivery of a Notice to Proceed. The CITY's knowledge of work being performed prior to delivery of the Notice to Proceed shall not obligate the CITY to accept or pay for such work. The Contractor shall provide all required Contract bonds and evidences of insurance prior to commencing work at the site.

At least fifteen (15) days before the start of construction the Contractor shall contact the CITY to verify that there is no proposed project in the area. The Contractor shall notify, in writing abutting property occupants of the proposed construction start date at least ten (10) days before the start of construction. A copy of said and written notification shall be provided to the inspector for approval before they are distributed to the occupants of the abutting property.

6-1.2 Criteria. The construction schedule shall conform to the following criteria:

1) The schedule shall be prepared using the latest version of Primavera, Microsoft Project or approved equal.

2) Work activities shall be based on the items of work per 2-6, and the following:

   a) Contract Unit Price items shall be subdivided into those portions to be constructed during each stage or phase of construction.

   b) Lump sum items shall be subdivided into those portions to be constructed during each stage or phase of construction.

3) Utility relocations in coordination with the Contractor per 5-4 of these Special Provisions shall be considered as activities.

4) Required submittals, working and shop drawings shall be included as activities.

5) The procurement of construction materials and equipment with long lead times for deliveries shall be included as activities.

6) Work to be performed by subcontractors shall be identified and shown as work activities.

7) Start and completion dates of each activity shall be illustrated.

8) Completion of all Work under the Contract shall be within the time specified in 6-7 of these Special Provisions and in accordance with the Plans and Specifications.

6-1.3 Requirements. In preparing the construction schedule, the following items shall be considered:

Sequence of Construction - The Contractor shall sequence the Work in a manner to expeditiously complete the project with a minimum of inconvenience to the adjacent owners and to conform to the following:

1. Concrete removal - All concrete removed shall be hauled off the Work site (including the Contractor's storage yard) no later than the calendar day following the day that the removal is performed. If the calendar day following the removal is a non-working day (Saturday, etc.) the concrete shall be hauled off the Work site on the same day it was removed. Unless otherwise authorized by the Engineer, failure by the Contractor to haul concrete from the Work site and/or Contractor's storage yard(s) in a timely manner may result in a liquidated damage assessed upon the Contractor. Such liquidated damage shall be determined by the Engineer and will be deducted, accordingly, from a Progress Payment due to the Contractor.

2. PCC construction - Construction of PCC sidewalks, access ramps, curbs and gutters shall be formed and poured within 5 working days following removal of the existing material at any location. Any adjacent trench (i.e. 1-foot wide slot trench), required to remove and construct said PCC construction shall be restored per these Specifications and no later than 2 calendar days following the PCC construction. Failure by the Contractor to comply with these requirements in a timely manner may result in a liquidated damage assessed upon the Contractor. Such liquidated damage shall be determined by the Engineer and will be deducted, accordingly, from a Progress Payment due to the Contractor.

3. Pavement removal - All pavement removed as a result of trenching shall be hauled off the Work site no later than the same day that the removal is performed.

4. Irrigation systems - Irrigation systems disrupted by the Contractor shall not be left inoperable for more than three working days.

5. Subsection 307-1.3 regarding the ordering of materials.

6. All Work shall only be performed between the hours of 8:00 a.m. and 4:30 p.m. unless otherwise approved by the Engineer.

7. A move-in period of ten (10) calendar days will be allowed starting on the date in the Notice to Proceed.

8. Stockpile area. Schedule shall indicate date for cleanup of stockpile area.

6-1.4 Updates. The Contractor shall submit 2 paper copies of the updated construction schedule to the Engineer on the first working day of each month.

If the Contractor decides to make a major change in the method of operations after commencing construction, or if the schedule fails to reflect the actual progress, the Contractor shall submit to the Engineer a revised construction schedule in advance of beginning revised operations.

Full compensation for complying with all requirements of Section 6-1.4 Updates shall be per the Contract Unit Price for Mobilization. If the Contractor fails to submit an updated Construction Schedule to the Engineer on the first working day of each month, the CITY will deduct $300 for each day that each monthly schedule update is not submitted.

6-7 TIME OF COMPLETION.

6-7.1 General. Replace the first sentence with the following:

Time shall be of the essence in the Contract. The Contractor shall begin Work after the mailing by the Engineer to the Contractor, first class mail, postage prepaid, a Notice to Proceed and shall diligently prosecute the same to completion within ***188*** working days from the start date specified in the Notice to Proceed.

6-7.2 Working Day

Add the following paragraph at the end of the section:

A standby crew for emergency work shall be available at all times during the rainy season (October 1 to April 15). No work shall take place within 100 feet of the baseball fields at Entradero Basin from January to June.

6-8 COMPLETION, ACCEPTANCE AND WARRANTY. Replace the second paragraph with the following:

If, in the Engineer's judgment, the Work has been completed and is ready for acceptance, the Engineer will so certify and will determine the date when the Work was completed. This will be the date when the Contractor is relieved from responsibility to protect the Work. The Engineer may cause a Notice of Completion to be filed and recorded with the Los Angeles County Recorder's Office. At the Engineer's option, the Engineer may certify acceptance to the City Council who may then cause a Notice of Completion to be filed and recorded with the Los Angeles County Recorder's Office.

Add the following subsections:

6-8.1 Manufacturer's Warranties. Manufacturer's warranties shall not relieve the Contractor of liability under these Specifications. Such warranties only shall supplement the Contractor's responsibility.

The Engineer may, at his option, require a manufacturer's warranty on any product offered for use.

6-9 LIQUIDATED DAMAGES. In each of the two paragraphs, substitute "$1,000" (one-thousand) in place of "$250" as the amount of the liquidated damages per each consecutive calendar day.

6-11 SEQUENCE OF CONSTRUCTION.

6-11.1 Multiple Headings. In order to meet the contract schedule, the Contractor will be allowed to initiate and maintain two or more construction locations.

SECTION 7 - RESPONSIBILITIES OF THE CONTRACTOR

7-2 LABOR.

Add the following subsections:

7-2.3 Payrolls and Payroll Records.

Any payroll and payroll records required for this project shall be submitted, for each week in which any contract work is performed, to the Engineer. A retention of $5,000 per report per pay period will be withheld from a progress payment for a late or missing report. A report shall be deemed as late or missing when not submitted to the Engineer within 10 calendar days from the close of the pay period for which the report applies. In addition, a non-refundable deduction of $100 per report per day will be deducted from payments due the Contractor for each late or missing report. The $100 non-refundable deduction per day will be incurred beginning on the first day the report is late or missing.

7-2.4 Subcontractor and DBE Records.

At the completion of the contract if the Contractor does not submit its Subcontractor and DBE Records to the Engineer a retention in the amount of $10,000 per record will be withheld from a progress payment for a late or missing record. A record shall be deemed as late or missing when not submitted to the Engineer within 15 calendar days from the completion of the contract. In addition, a non-refundable deduction of $300 per record per day will be deducted from payments due the Contractor for each late or missing record. The $300 non-refundable deduction per day will be incurred beginning on the first day the record is late or missing.

7-3 LIABILITY INSURANCE. Replace the second sentence of the second paragraph with the following:

The Contractor must maintain at its sole expense the following insurance, which will be full coverage not subject to self-insurance provisions:

1) Automobile Liability, including owned, non-owned and hired vehicles, with at least the following limits of liability:

   a). Combined single limits of $2,000,000 per occurrence.

2) General Liability including coverage for premises, products and completed operations, independent contractors, personal injury and contractual obligations with combined single limits of coverage of at least $3,000,000 per occurrence, with an annual aggregate of no less than $5,000,000.

Add the following:

The Contractor must include all subcontractors as insureds under its policies or must furnish separate certificates and endorsements for each subcontractor.

7-4 WORKER'S COMPENSATION INSURANCE. Add the following after the first sentence of the second paragraph:

Worker's Compensation Insurance shall be with limits as required by the State of California and Employer's Liability with limits of $1,000,000 per accident.

7-5 PERMITS. Replace the second paragraph with the following:

The Contractor shall obtain a City of Torrance Business License, and a no-fee Construction Excavation Permit before commencing construction. The Contractor shall obtain no-fee Electrical and Plumbing permits from the Building and Safety Department before commencing installation of new electrical services or on-site irrigation systems, as applicable.

The Contractor shall apply for a Notice of Intent for coverage under the NPDES Construction Permit per Section 7-8.6.3.

The Contractor shall obtain a Caltrans Encroachment Permit for installation of ARS units in State right of way. The Contractor shall pay permit fees and prepare Traffic Control Plan as required by Caltrans.

Full compensation for complying with the above requirements shall be considered as included in the prices bid for the appropriate items of work.

Add the following subsections:

7-5.1 Los Angeles County Department of Public Works Permit. A permit is required from the Los Angeles County Department of Public Works ("LACDPW") for Automatic Retractable Screens (ARS) in county catch basins and must be obtained by the contractor, instead of the City. The Contractor shall pay all charges, fees and bonds for this permit.

Full compensation for complying with the above requirements shall be considered as included in the lump sum price for mobilization. The Contractor shall be solely responsible for any fee charged to re-inspect rejected or incomplete work.

Unless otherwise authorized by the LACDPW Permit and approved plan, all storm drain work shall be performed in accordance with these Specifications and Special Provisions.

7-6 THE CONTRACTOR'S REPRESENTATIVE.

Add a third paragraph to the section stating the following:

The Contractor's Representative shall be approved by the CITY prior to the start of the Work. If the designated representative is rejected, the Contractor shall immediately designate another representative in writing and submit to the City for consideration. The CITY shall have the authority to require the Contractor to remove its representative and/or alternate representative at any time and at no cost to the CITY.

7-8 WORK SITE MAINTENANCE.

7-8.1 Cleanup and Dust Control. The second paragraph is amended to read:

Unless directed otherwise by the Engineer, the Contractor shall furnish and operate a self-loading motor sweeper with spray nozzles at least once each working day to keep paved areas acceptably clean to the City whenever construction, including restoration, is incomplete.

7-8.2 Air Pollution Control.

Add the following paragraphs after the first paragraph:

Two construction sites, Amie and Henrietta, are located in residential areas. The other construction site, Entradero, is located in a public park, adjacent to an active Little League baseball field and near an elementary and middle school. Project construction could result in emissions that may temporarily and/or locally exceed significance thresholds established by the SCAQMD for particulate matter, NO_X and CO. Contractor must take steps to minimize air pollution.

Dust Control Measures. At least seven days prior to commencing work, Contractor shall submit a Dust Control Plan demonstrating compliance with construction-related particulate standards, including $PM_{10,}$ during construction. This plan will include measures concerning application of water, chemicals, or other dust suppressants during construction and removal of particulate matter from roadways to prevent re-entrainment, and must be approved by CITY prior to the initiation of any grading or construction activities.

Maintaining a minimum particulate matter impact (of particles between 2.5 and 10 microns) during construction grading requires use of best available control measures (BACMs) for minimizing construction dust; the Dust Control plan to be presented by Contractor should include BACMs for this project.

A person or persons shall be designated by the Contractor to monitor the dust control program and to order increased watering or other measures, as necessary, to prevent transport of dust offsite. Such monitoring responsibilities shall include holiday and weekend periods when work may not be in progress. The contractor shall provide the name and telephone number of such person prior to initiation of any project grading or construction activities.

Emission Control Measures. Short-term, construction related ozone precursor emissions, typical of the use of heavy equipment and vehicles during construction shall be controlled by the following measures:

Maintenance of Construction Equipment. The Contractor will maintain construction equipment in accordance with manufacturer's recommendations to prevent unnecessary emissions of NO_x, CO, VOC, and SO_2.

Fuel Use. The Contractor will use lower sulfur #2 diesel fuel in heavy-duty construction equipment, with a sulfur content of 0.5 percent, to minimize SO_2 emissions. The Contractor will burn 87-octane gasoline in other construction equipment, such as light-duty trucks, to minimize emissions of NO_x, CO, and VOC.

Amend the following subsection:

7-8.2.1 NOx Reduction.

The Contractor shall provide a NOx Reduction Plan, for review and approval by the Agency, demonstrating that the heavy-duty (> 50 horsepower) off-road vehicles to be used in the construction project, including owned, leased and subcontractor vehicles, will achieve a project wide fleet-average 25 percent NOx reduction. Acceptable options for reducing emissions may include use of late model engines, low-emission diesel products, alternative fuels, engine retrofit technology, after-treatment products, and/or other options as they become available. The NOx Reduction Plan shall include a comprehensive inventory of all off-road construction equipment, equal to or greater than 50 horsepower, that will be used an aggregate of 40 or more hours during any portion of the construction project. The inventory shall include the horsepower rating, engine production year, and projected hours of use or fuel throughput for each piece of equipment. The inventory shall be updated and submitted monthly throughout the duration of the project, except that an inventory shall not be required for any 30-day period in which no construction activity occurs. The NOx Reduction Plan shall also include the anticipated construction timeline including start date, and name and phone number of the project manager and on-site foreman. Payment for the preparation and implementation of the NOx Reduction Plan, including monthly inventory submittals shall be included in the lump sum Bid price for mobilization.

7-8.5 Temporary Light, Power, and Water. Add the following:

The Contractor shall obtain a construction water meter from the CITY by calling Torrance Customer Service Operations ("CSO") at (310) 921-6449. A $1,000 deposit is required and refundable upon return of the meter in good working condition. The Contractor shall pay for the water used, at the CITY's current water rates.

Some water mains in Torrance are owned/operated by California Water Service. For rental of a hydrant meter the contractor shall call California Water Service at (310) 257-1400.

7-8.6 Water Pollution Control.

Replace subsection as noted below:

7-8.6.2 Best Management Practices (BMPs). Best Management Practices shall be defined as any program, technology, process, siting criteria, operating method, measure, or device which controls, prevents, removes, or reduces pollution. The Contractor shall obtain and refer to the California Storm Water Best Management Practice Handbooks, Volume 3 Construction BMP Handbook and the Los Angeles County Department of Public Works Best Management Practices Handbook for Construction Activities. These publications are available from:

Los Angeles County
Department of Public Works
Cashier's Office
900 S. Fremont Avenue
Alhambra, CA 91803
Telephone (626) 458-6959

The Contractor shall have a minimum of two (2) readily accessible copies of each publication on the Work site at all times.

The Contractor shall implement BMPs in conjunction with the following construction operation and activities:

CONSTRUCTION PRACTICES	Clearing, Grading and Excavating
	Water Conservation Practices
	Dewatering
	Paving Operations
	Structure Construction and Painting
MATERIAL MANAGEMENT	Material Delivery and Storage
	Material Use
	Spill Prevention and Control
WASTE MANAGEMENT	Solid Waste Management
	Hazardous Waste Management
	Contaminated Soil Management
	Concrete Waste Management
	Sanitary/Septic Waste Management
VEHICLE AND EQUIPMENT MANAGEMENT	Vehicle and Equipment Cleaning
	Vehicle and Equipment Fueling
	Vehicle and Equipment Maintenance

The Contractor shall implement the following BMPs in conjunction with the previously listed construction operation activities:

VEGETATIVE STABILIZATION	Scheduling of Planting
	Preservation of Existing Vegetation
	Temporary Seeding and Planting
	Mulching
PHYSICAL STABILIZATION	Geotextiles and Mats
	Soil Stabilizer/Dust Control
	Temporary Stream Crossing
	Stabilized Construction Roadway
	Stabilized Construction Entrance
RUNOFF DIVERSION	Sodding, Grass Plugging, and Vegetative Buffer strips
	Earth Dikes, Drainage Swales, and Lined Ditches
	Top and Toe of Slope Diversion Ditches/Berms
	Slope Drains and Subsurface Drains

VELOCITY REDUCTION	Flared Culvert End Sections
	Outlet Prottection/Velocity Dissipation Devices
	Check Dams
	Slope Roughening/Terracing/Rounding
SEDIMENT TRAPPING	Slit Fences
	Straw Bale Barrier
	Sand Bag Barrier
	Brush or Rock Filter
	Storm Drain Inlet Protection
	Sediment Traps
	Sediment Basin

Additional BMPs may be required as a result of a change in actual field conditions, contractor activities, or construction operations. When more than one BMP is listed under each specific BMP category, the Contractor shall select the appropriate and necessary number of BMPs within each category in order to achieve the BMP objective.

BMPs for contractor activities shall be continuously implemented throughout the year. BMPs for erosion control and sedimentation shall be implemented during the period from October 15 to April 15, and whenever the National Weather Service predicts rain within 24 hours. BMPs for erosion control and sedimentation shall also be implemented prior to the commencement of any contractor activity or construction operation that may produce run-off, and whenever run-off from other sources may occur.

The CITY, as a permittee, is subject to enforcement actions by the State Water Resources Control Board, the Environmental Protection Agency and private citizens. The CITY may assess the Contractor a penalty of $1,000 for each calendar day that the Contractor has not fully implemented the appropriate BMPs and/or is otherwise in noncompliance with these provisions. In addition, the CITY will deduct, from the final payment due the Contractor, the total amount of any fines levied on the CITY, plus legal and staff costs, as a result of the Contractor's lack of compliance with these provisions and/or less than complete implementation of the appropriate BMPs.

Full compensation for the implementation of BMPs, including the construction, removal, and the furnishing of all necessary labor, equipment, and materials, shall be considered as included in the price bid for NPDES compliance.

Replace the subsection as noted below:

7-8.6.3 Storm Water Pollution Prevention Plan (SWPPP).

Construction activities including clearing, grading and excavating that result in land disturbances of equal to or greater than one acre are covered by the National Pollutant Discharge Elimination System General Construction Permit, State Water Board Order No. 2009-0009-DWQ. Dischargers obtaining coverage will file electronically for coverage under Order No. 2009-0009-DWQ. Order No. 2009-0009-DWQ is a Risk Based permitting approach. The Contractor is required to go to the State Water Resources Control Board website and determine risk level and apply for permit and update permit using the Storm Water Multiple Application and Reporting Tracking System (SMARTS). The SMARTS system is an online tool for submitting Notice of Intent (NOI), Notice of Termination (NOT), compliance and monitoring data and Annual Reports when required.

This General Construction Permit regulates pollutants in discharges of storm water associated with construction activity. To obtain authorization for proposed storm water discharges, pursuant to this General Construction Permit, the Contractor must access the SMARTS system to submit NOI and pay the appropriate fee to the State Regional Water Quality Control Board (SWQCB). Contractor shall provide to the City a Storm Water Pollution Prevention Plan (SWPPP). The Contractor shall terminate coverage under the General Construction Permit for a complete project by submitting a NOT via the SMARTS system after post construction storm water Best Management Practices (BMPs) are in place and approved by the City.

Full compensation for preparation of the NOI, NOT, required fees, construction, and post construction BMPs, sampling, analysis and reporting as required by Order No. 2009-0009-DWQ and all other related costs shall be considered as included in the bid for mobilization.

Construction activities covered by the General Permit require submittal by the Contractor of a SWPPP prior to the start of any clearing, demolition, grading or excavation. A SWPPP shall be defined as a report that includes site map(s), identification of construction and contractor activities that could pollute storm water, and a description of measures and practices to control the potential pollutants. The preparation and implementation of the SWPPP is intended to ensure that the Contractor will make every reasonable effort to prevent the pollution of water resources during the period of construction. The size and nature of this Contract place it under the regulations of the NPDES General Permit for Storm Water Discharge Associated

with Construction Activity. In the State of California, these regulations are adopted by the State Water Resources Control Board. These regulations require a SWPPP for any work where clearing, grading, and excavation result in a land disturbance of one or more acres. As a result, the Contractor shall prepare, submit to the CITY for review and approval, and implement a SWPPP for this Contract in compliance with these regulations.

If, during construction operations, field conditions change in a manner which, in the opinion of the Engineer, significantly deviates from how the SWPPP, as approved by the CITY, addressed the current construction operation, the Engineer may direct the Contractor to revise the current construction operation and/or the SWPPP. Such directions will be made in writing and will specify the items of work for which the SWPPP is inadequate. No further work on these items will be permitted until the Contractor revises the construction operations to the satisfaction of the Engineer and/or until the Contractor submits a revised SWPPP and receives CITY approval. The Engineer will notify the Contractor of the acceptance or rejection of the revised SWPPP within seven (7) working days from the date of submittal.

The SWPPP shall be submitted to the CITY for review and approval a minimum of fifteen (15) working days prior to the commencement of construction operations in accordance with 6-1 of these Special Provisions. The SWPPP shall remain on the construction site while site is under construction, during working hours, commencing with the initial construction activity and ending with Notice of Termination.

Full compensation for preparation of the SWPPP, revisions to the SWPPP, and all other related costs shall be considered as included in the bid price for mobilization.

Add the following subsections:

7-8.8 Contractor's Storage Yard and Laydown Area. The Contractor shall be responsible for obtaining a storage yard for the duration of the Work. If the proposed location of the yard is located within the boundaries of the CITY, the Contractor shall obtain prior approval from the Engineer.

The Contractor shall be responsible to secure and pay for all necessary construction laydown areas. All repairs to construction laydown areas and temporary improvements shall be inspected and approved by the inspector and/or an authorized representative of the property owner per request. The Contractor shall remove, regrade and, when necessary, backfill to restore the construction laydown access and temporary improvements to its original/former condition at the completion of the work. The Contractor shall backfill excavated areas with engineered fill up to the original grade, unless otherwise specified or indicated in the plans.

7-8.9 Graffiti Removal. The Contractor shall maintain the Work, all of its equipment, and all traffic control devices, including signage, free of graffiti throughout the duration of the Contract. The Contractor shall respond to any request from the Engineer to remove graffiti within 4 hours of notification. Should the Contractor fail to respond to such request, the CITY reserves the right to make other arrangements for the requested graffiti removal and deduct the cost from any monies due the Contractor.

7-9 PROTECTION AND RESTORATION OF EXISTING IMPROVEMENTS.

Add the following paragraph after the second paragraph:

Where construction activities interfere with continued irrigation of existing areas of the park not subject to project construction, the Contractor shall provide a temporary irrigation solution for those areas for the duration of the construction, subject to CITY approval.

Add the following paragraphs:

The Contractor shall be responsible to protect all new concrete work from being etched, scratched or otherwise marked or having wet slough material deposited thereon. If new concrete work is marked, the Contractor shall replace it at its expense in accordance with 303-5.7 of these special provisions.

For work done in the Entradero Basin, grading shall be omitted ten feet from the toe of the slope to preserve the existing habitat as noted in the plans. The area shall be marked so that no construction equipment or personnel enter the defined area. The score board also located at the Entradero Basin shall also be protected in place.

Add the following subsection:

7-9.1 Replacement of Plants. When the Contract requires the removal and replacement of groundcovers, shrubs, trees, lawns or sod, including parkways, the Contractor shall comply with the following minimum requirements: the area to be replanted shall be regraded and covered with two inches of an approved topsoil.Topsoil shall be in accordance with 212-1.1.

7-9.2 Replacement of Sprinkler Systems. Damaged sprinklers shall be replaced so that the area watered by the original system will be adequately watered by the reconstructed system without undue waste of water. Overspray on any area no longer planted should be avoided, and any revised shape or layout of the remaining planted area will be adequately watered. Any additional material or work required to obtain said adequate coverage shall be furnished by the Contractor, at its expense. The Contractor shall be responsible to replace any lawn or plant damaged from lack of irrigation resulting from the Contractor's operations, at its expense, to the satisfaction of the Engineer.

7-9.3 Protection of Existing Pavement Surfaces from Tack Coat and Oil. When work requires the placement of a tack coat pursuant to Subsection 302-5.4, the Contractor shall protect existing pavement surfaces outside of the work limits from the spreading of tack coat and oil adhering to truck tires exiting work area. The protected area shall extend the full width of the street and be by either of the following methods:

1) The Contractor shall wet the existing pavement surface to a distance of ten (10) feet away from the work limit. The wetted area shall be maintained as such until placement of asphalt concrete pavement is completed; OR

2) The Contractor shall provide a thin spreading of sand or rock dust material to a distance of five (5) feet away from the work limit. The sand or rock dust area shall be maintained as such until placement of asphalt concrete pavement is completed. The Contractor shall be responsible to remove the sand or rock dust immediately after the placement of asphalt concrete pavement is completed.

7-10 PUBLIC CONVENIENCE AND SAFETY

7-10.1 Traffic and Access. Replace the fourth paragraph with the following:

Vehicular access to residential driveways shall be maintained to the property line except when necessary construction precludes such access. When the Contractor begins excavation of a residential driveway, safe access shall be provided within 4 hours and not later than the end of the same workday in which excavation began.

Add the following before the last paragraph:

The Contractor shall provide the necessary measures to prevent public access to private residences during removal and replacement of existing barrier structures, such as wood and chain link fences, during non-working hours.

The Contractor shall be responsible to provide at least 48 hours written notice to each affected property before closing or partially closing any driveway or pedestrian access.

Should any change in these requirements be necessitated by extraordinary occurrences or requirements during the execution of the Work, the Contractor shall obtain prior written approval of the Engineer.

Add the following subsections:

7-10.1.1 Traffic Control Plan The Contractor shall submit a legible, detailed Traffic Control Plan (TCP) on one or more 24" x 36" reproducible plan sheets which shall clearly show and/or describe all proposed lights, warning signs, barricades, delineators, temporary lane markings, temporary traffic signals or signs, and any and all other facilities proposed to be installed. Said TCP shall be prepared by a Registered Civil and Traffic Engineer and shall show all lane closures, restrictions, tapers and other disruptions of normal traffic flow, including pedestrian and vehicular detours. A schedule and/or sequencing diagram shall be included. Said TCP may be drawn on a sepia or other transparent copy of the Plans. Said TCP shall be submitted to the Engineer for approval no later than two (2) weeks after the award of Contract. It shall be the Contractor's responsibility to immediately revise said Plan at the direction of the Engineer, and the Contractor hereby agrees that such changes shall not constitute a claim for extra work or additional costs. The approved TCP shall be strictly adhered to, and the Contractor hereby understands and agrees that its failure to provide any facility or device as shown on the TCP, or its deviation from said Plan, shall constitute a breach of Contract.

Full compensation for complying with the submittal requirements, furnishing, placing and removing traffic control shall be on a lump sum basis per the Contract Unit Price.

7-10.1.2 Minimum Requirements for Maintaining Traffic Flow. The Contractor shall observe the following minimum requirements:

a) Unless otherwise shown on the Traffic Control Plans, permitted by this Contract or authorized by the Engineer, all roadways, driveways, travel and turning lanes, sidewalks and access ramps shall remain open at all times.

b) The Contractor shall provide adequate steel plating to cover and protect a newly poured PCC cross gutter with spandrels and integral curb in order to allow traffic flow and not close a street. A minimum lane width of 14 feet shall be provided over the steel plating.

c) At a minimum, the Contractor shall maintain one (1) ten (10) foot-wide lane open in each direction between the hours of 7:00 a.m. and 3:30 p.m. All travel lanes shall be kept open all other times.

d) Any travel lane adjacent to the curb and within the work zone shall be, at a minimum, a twelve (12) foot-wide lane.

e) Reduction in lane requirements may be afforded only with prior written approval from the Engineer.

f) Traffic signs, flaggers, warning devices, safety traffic devices and, on select streets, electronic arrow boards for diverting and directing traffic shall be furnished, installed and maintained by the Contractor throughout the project.

g) The Contractor must provide access through the work zone in non-working hours by means of temporary ramps. Open trenches shall either be covered by steel plates, or ramped with crushed miscellaneous base. No drop-off at either transverse or longitudinal joints shall be allowed at any time. Temporary ramps, including those for driveway access, shall be constructed with either crushed miscellaneous base or temporary asphalt, as appropriate, with a minimum of 1" to 12" slope in both longitudinal and transverse directions.

All costs for the above requirements shall be included in the Contract Unit Price for Traffic Control.

7-10.1.5 Temporary "No Parking" Signs. The Contractor is responsible to post "Temporary No Parking" signs at least forty-eight (48) hours in advance of the first date of work and the required enforcement. If work is to begin on either a Monday or Tuesday, the Contractor shall post the signs on a Friday. Each sign must include text indicating the beginning and end dates and the hours in effect. "Tow-Away" and "No Parking" must be shown on each sign face. If it is required to temporarily restrict parking 24 hours/day then

"Tow-Away" and "No Parking Anytime" must be shown on each sign face. The signs shall be mounted on either 1" x 2" X 3' high wood stakes, Type II barricades, or 39-inch high delineators. Signs shall be spaced at approximately 100' intervals on the effected side(s) of the street. Signs shall not be posted on trees, traffic signal poles, utility poles, street lights, or any other street furniture.

Signs shall be professionally made of moisture-resistant, heavy duty cardboard or other approved material. All signs shall be maintained by the Contractor and kept free of graffiti. Any sign that becomes illegible or is removed shall be replaced within twenty-four (24) hours. The Contractor shall only be permitted to restrict parking for the minimum time necessary to complete on-going work. The Contractor shall be responsible to remove and repost "Temporary No Parking" signs when work will be delayed for more than five (5) consecutive days, or if the work must go beyond the end date shown on the signs, or otherwise directed by the Engineer.

The Contractor shall obtain approval for the signs and the placement thereof from the Engineer. Immediately after this approval and posting, the Contractor shall notify Torrance Police Department, Traffic Division, at (310) 618-5557 for review and enforcement. The parking restriction cannot be enforced until the signs have been in place 48 hours and the Police notified.

The Contractor shall maintain said signs through the day of work, and shall remove all of said signs on or within one (1) calendar day of the completion of work within the restricted parking area.

Full compensation for furnishing, placing, maintaining and removing temporary signs shall be considered as included in the Contract Unit Price for Traffic Control.

7-10.3 Street Closures, Detours, Barricades.

Add the following paragraphs after the first paragraph:

In addition to the requirements of this subsection, the Contractor shall conform to the requirements for street closures, detours, and barricades as stipulated in the Special Provisions. However, deviations from the requirements stipulated in the Special Provisions may be permitted upon written approval of the Public Works Director when such deviations are in the best interest of the City.

The Contractor shall implement the necessary measures to ensure the safety of pedestrians. To prevent pedestrians from crossing across active construction zones, barricades, fencing, or other appropriate devices will be installed. All pedestrian walkways will be maintained in a clean and safe condition at all times. The Contractor shall utilize signage to direct pedestrians safely around work areas. All existing pedestrian paths shall be maintained or replaced during construction.

Replace the second paragraph with the following:

The Contractor shall notify the Public Works Department at (310) 781-6900, at least ten (10) working days in advance of closing or partially closing any street or alley and comply with their requirements. In addition, the Contractor shall notify the Torrance Police Department at (310) 328-3456 and Torrance Fire Department at (310) 781-7040 at least two (2) working days in advance of such closing.

The Contractor shall immediately notify the above parties upon completion of the construction work and opening or reopening of any street or alley.

Add the following paragraph after the third paragraph:

The Contractor shall conform to Section 74.6.8 of the Torrance Municipal Code. In addition, the Contractor shall comply with directions from the Engineer to provide protection at excavations, trenches and/or other potentially hazardous construction areas. The Contractor shall be required to erect temporary railing (Type K) per Caltrans Standard Plan T3, five-foot high chain link fences, or equivalent protection, to completely enclose all open excavations over three feet (3') in depth. Fencing shall be approved by the Engineer, and provide adequate security. Fencing may be removed during working hours to the extent necessary to provide access and working room, in which case the Contractor shall provide equivalent

security, to the satisfaction of the Engineer, during said periods. Any excavation not secured to the satisfaction of the Engineer shall be completely backfilled prior to the end of each day's construction activities. The Engineer may require additional security devices, lighting or other protection in addition to said fencing. Full compensation for furnishing, placing and removing temporary protection shall be considered as included in the price for the various items of work.

7-10.3.1 Temporary Steel Plates. When backfilling operations of an excavation in the traveled way, whether transverse or longitudinal cannot be properly complete within a work day, steel plate bridging with a non-skid surface and shoring may be required to preserve unobstructed traffic flow. In such cases, the following conditions shall apply:

1. Steel plate used for bridging shall extend a minimum of 12-inches beyond the edges of the trench.

2. Steel plate bridging shall be installed to operate with minimum noise.

3. The trench shall be adequately shored to support the bridging and traffic loads

4. Temporary paving with cold asphalt concrete shall be used to feather the edges of the plates, if plate installation by Method (2) described below, is used.

5. Bridging shall be secured against displacement by using adjustable cleats, shims, or other devices.

Steel plate bridging and shoring shall be installed using the following method for speeds 45 mph or less:

Approach plate(s) and ending plate (if longitudinal placement) shall be attached to the roadway by a minimum of two (2) dowels pre-drilled into the corners of the plate and drilled 2-inches into the pavement. Subsequent plates are butted to each other. Fine grade asphalt concrete shall be compacted to form ramps, maximum slope of 8.5% with a minimum 12-inches taper to cover all edges of the steel plates. When steel plates are removed, the dowel holes in the pavement shall be backfilled with either graded fines of asphalt concrete mix, concrete slurry or an equivalent slurry that is satisfactory to the CITY.

The Contractor shall be responsible for maintenance of the steel plates, shoring and asphalt concrete ramps.

The following table shows the advisory minimal thickness of steel plate bridging required for a given trench width (A-36 grade steel, designed for HS20-44 truck loading).

Trench Width	Minimum Plate Thickness
10″	½″
1′-11″	¾″
2′-7″	7/8″
3′-5″	1″
5′-3″	1 ¼″

For spans greater the 5′-3″ a structural design shall be prepared by a California registered civil engineer. All steel plates within the right-of-way whether used in or out of the travel way shall be without deformation. Steel plates shall be non-skid. Advanced signs shall be required for steel plates within traveled ways (Type P per the Watch Manual or a Rough Road sing (W33) per Caltrans requirements).

Add the following subsection:

7-10.5 SITE SECURITY.

Insert the following paragraph:

The Contractor shall take full responsibility for the adequacy, stability and safety of all site operations and methods of construction. The Contractor shall comply with all Federal OSHA Construction Standards and agency policies, State of California, and City of Torrance safety and security regulations of construction.

The Contractor shall bear the sole responsibility and liability for the safety and security of all construction tools, equipment, materials, machines, and vehicles used for construction. CITY will not be responsible or accountable for any damage or vandalism to any of the items listed above.

The Contractor shall provide and maintain at his own cost all lights, guards, fencing and security watching when and where necessary or required by CITY for the protection of the construction site and the materials and equipment utilized there or for the safety, security, and convenience of the public or others.

The Contractor shall provide a jobsite safety plan to be reviewed, evaluated, and approved by City of Torrance within 10 working days from signing the contract. The Contractor shall perform, document, and present to CITY regular construction safety inspections over a time duration to be agreed upon with CITY.

CITY shall not be responsible for and will not have control or charge over construction means, methods, techniques, sequences or procedures, or for safety precautions and programs in connection with the construction work. CITY shall not be responsible for or have control or charge over the acts or omissions of the Contractor (including the Contractor's failure to carry out the construction work in accordance with the Contract) and of Sub-contractors or any of their agents or employees, or any other persons performing services for the construction site, except if such acts or omissions are caused by CITY's negligence to perform any of their responsibilities in accordance with the contract agreement between CITY and the Contractor.

Add the following subsection:

7-15 PROJECT CONSTRUCTION SIGNS AND PORTABLE CHANGEABLE MESSAGE SIGNS.

The Contractor shall furnish and install five (5) Project Construction Signs at locations:

- Two (2) signs at Entradero Basin
- Two (2) signs at Henrietta Basin
- One (1) sign at Amie Basin

Full compensation for furnishing, installing, maintaining and removing signs shall be per unit per the Contract Unit Price.

The signs shall be a 3MM Pollymetal sign, 36 inches by 48 inches. The signs shall include recognition for funding and the logos of the Santa Monica Bay Restoration Commission, Bureau of Reclamation, and the City of Torrance. All of the dimensions, color specifications, and logo specifications shall be approved by the Engineer before fabrication.

SECTION 9 - MEASUREMENT AND PAYMENT

9-1 MEASUREMENT AND PAYMENT. Add the following sections:

9-1.2.1 Payment for Labor and Materials.

The Contractor shall pay and cause the subcontractors to pay any and all accounts for labor, including Worker's Compensation premiums, State Unemployment and Federal Social Security payments and all other wage and salary deductions required by law. The Contractor also shall pay and cause the subcontractors to pay any and all accounts for services, equipment and materials used by it and the subcontractors during the performance of work under this contract. All such accounts shall be paid as they become due and payable. If requested by the Engineer, the Contractor shall immediately furnish the City with proof of payment of such accounts.

9-1.2.2 Measurement and Payment

Payment of each item will include full compensation for furnishing all labor, materials, tools, equipment and backup equipment; transportation and technical competence for performing all work necessary to complete each item as indicated on the plans and as specified in these Contract Documents, including but not limited to obtaining all applicable certifications necessary for specialty personnel and major equipment in conformance with Subsection 7-5, and all other applicable permits; securing a storage yard to store all equipment and materials to be used on the job, disposal of waste materials, restoration of the site, etc. The storage yard may also be used as a temporary storage for excavated materials, and traffic control items. No separate payment will be made for mobilization and demobilization. Costs for mobilization/demobilization shall be included in the unit prices bid for each work item.

9-2 LUMP SUM WORK. Replace the second paragraph with the following:

The Contractor shall, within five (5) working days of receipt of a request from the Engineer, submit a complete breakdown of lump sum bid prices showing the value assigned to each part of the work, including an allowance for profit and overhead. In submitting the breakdown, the Contractor certifies that it is not unbalanced and that the value assigned to each part of the work represents its estimate of the actual cost, including profit and overhead, of performing that part of the work. The breakdown shall be sufficiently detailed to permit its use by the Engineer as one of the bases for evaluating requests for payment. No extra costs shall be allowed for providing these breakdowns.

9-3 PAYMENT.

9-3.2 Partial and Final Payment. Replace the third paragraph with the following:

For each progress estimate, 5 percent will be deducted and retained by the CITY, and the remainder less the amount of all previous payments will be paid. In addition, 125% of the amount of outstanding "Stop Notices" shall be withheld.

Add the following:

The Contractor shall submit all requests for payment on a Progress Payment Invoice.

Prior to submittal of said invoice, all items for which payment is requested shall be checked and approved in writing by the Engineer. No payments will be made unless all back-up data is submitted with the payment request and the Progress Payment Invoice is signed by both Contractor and Engineer.

9-3.4 Mobilization. Replace the entire subsection with the following:

Mobilization shall include the provisions of the Construction Schedule, Best Management Practices and Storm Water Pollution Prevention Plan; Sewage Spillage Prevention; Emergency Response Plan; site review; obtaining all permits, insurance, and bonds; moving onto the site all plant and equipment; furnishing and erecting plants, temporary buildings, and other construction facilities, and removal of same at completion of the Work; and other work, all as required for the proper performance and completion of the Work.

Mobilization shall include, but not be limited to, the following items:

a) Submittal and modification, as required, of the Construction Schedule, Contract Price Breakdown and Storm Water Pollution Prevention Plan.

b) Moving on to the site of all Contractor's plant and equipment as required.

c) Installing temporary construction power and wiring.

d) Establishing fire protection system.

e) Developing construction water supply.

f) Providing on-site sanitary facilities and portable water facilities, as required.

g) Arranging for and erection of temporary buildings and other construction facilities, including the Contractor's work and storage yard field office trailers complete with all specified equipment furnishings and utility services.

h) Establishing fire protection system for its temporary facilities.

i) Submittal of all required insurance certificates and bonds, including subcontractors.

j) Obtaining all required permits (except as noted in 7-5), licenses, insurance, and bonds. Providing copies to the ENGINEER.

k) Posting all OSHA required notices and establishment of safety programs.

l) Potholing and other research and review as necessary to verify site conditions and utility locations

m) Having the Contractor's Superintendent present at the job site full-time.

n) Erecting all temporary fencing including removal and disposal of existing temporary fencing.

o) Removal (including all spray-painted markings on any surface), cleanup, and restoration.

Payment for such costs shall be considered as included in the mobilization bid item.

9-3.5 Noncompliance with Plans and Specifications.

Failure of the Contractor to comply with any requirement of the Plans and Specifications, and/or to immediately remedy any such noncompliance upon notice from the Engineer, may result in suspension of Contract Progress Payments. Any Progress Payments so suspended shall remain in suspension until the Contractor's operations and/or submittals are brought into compliance to the satisfaction of the Engineer. No additional compensation shall be allowed as a result of suspension of Progress Payments due to noncompliance with the plans or specifications. The Contractor shall not be permitted to stop work due to said suspension of Progress Payments.

9-4 CLAIMS.

The Contractor shall not be entitled to the payment of any additional compensation for any cause, including any act, or failure to act, by the CITY, or the happening of any event, thing or occurrence, unless the Contractor shall have given the CITY due written notice of potential claim as hereinafter specified.

The written notice of potential claim shall set forth the reasons for which the Contractor believes additional compensation will or may be due, the nature of the costs involved, and, insofar as possible, the amount of the potential claim. Said notice shall be submitted on a form approved by the CITY at least forty-eight (48) hours (two working days) in advance of performing said work, unless the work is of an emergency nature, in which case the Contractor shall notify and obtain approval from the Engineer prior to commencing the work. The Engineer may require the Contractor to delay construction involving the claim, but no other work shall be delayed, and the Contractor shall not be allowed additional costs for any said delay but may be allowed an extension of time if the Engineer agrees that the work delayed is a controlling element of the Construction Schedule. The Contractor shall be required to submit any supporting data (or a detailed written explanation justifying further delay) within five (5) work days of a request from the Engineer and shall be responsible for all costs associated with any delays resulting from late and/or incomplete submittals. By submitting a Bid, the Contractor hereby agrees that this subsection shall supersede 6-6.3 and 6-6.4 of the Standard Specifications.

It is the intention of this subsection that differences between the parties arising under and by virtue of the Contract be brought to the attention of the Engineer at the earliest possible time in order that such matters may be settled, if possible, or other appropriate action promptly taken. The Contractor hereby agrees that it shall have no right to additional compensation for any claim that may be based on any such act, failure to act, event, thing or occurrence for which no written notice of potential claim as herein required was timely filed.

PART 2 - CONSTRUCTION MATERIALS

SECTION 200 – ROCK MATERIALS.

200-1 ROCK PRODUCTS

200-1.3 Gravel

Modify the subsection to read as follows:

Gravel shall be composed of particles with one or more fractured faces and 0-5% passing ¾" sieve.

200-1.6 Stone for Riprap

200-1.6.2 Grading Requirements. Replace Table 200-1.6 (A) to read:

	4 Ton	2 Ton	1 Ton	½ Ton	¼ Ton	300 lbs	150 lbs	100 lbs	50 lbs
8 Ton	0-5	-	-	-	-	-	-	-	-
4 Ton	50-100	0-5	-	-	-	-	-	-	-
2 Ton	35-100	50-100	0-5	-	-	-	-	-	-
1 Ton	-	95-100	50-100	0-5	-	-	-	-	-
½ Ton	-	-	95-100	50-100	0-5	-	-	-	-
¼ Ton	-	-	-	95-100	50-100	0-5	-	-	-
300 lbs	-	-	-	-	-	50-100	0-5	-	-
200 lbs	-	-	-	-	95-100	-	-	0-5	-
150 lbs	-	-	-	-	-	95-100	50-100	-	-
100 lbs	-	-	-	-	-	-	-	50-100	0-5
75 lbs	-	-	-	-	-	-	95-100	-	-
50 lbs	-	-	-	-	-	-	-	95-100	50-100
25 lbs	-	-	-	-	-	-	-	-	95-100

200-2 UNTREATED BASE MATERIALS

200-2.1 General. Replace the entire subsection with the following:

Untreated base for pavement, curb, gutter, cross gutters, bus pads, hardscape and other improvements shall be either Crushed Aggregate Base conforming to 200-2.2 or Crushed Miscellaneous Base conforming to 200-2.4.

200-2.4 Crushed Miscellaneous Base

200-2.4.1 General.

Add the following:

The Contractor shall provide a "Sifter" to the City's Bishop Basin for 4 weeks for City staff to process a stockpile of crushed asphalt. The Sifter shall provide a graded material to meet requirements of Section 200-2.4.2. The Contractor shall obtain CMB for this project from the processed stockpile at the Bishop Basin.

SECTION 201 – CONCRETE, MORTAR, AND RELATED MATERIALS

201-2 REINFORCEMENT FOR CONCRETE

201-2.2 Steel Reinforcement.

201-2.2.3 Wire Mesh Reinforcement. Add the following:

Welded wire mesh to be used shall be 6 x 6 – W4 x W4.

SECTION 202 – MASONRY MATERIALS

202-2 CONCRETE BLOCK

Add the following sections:

202-2.3 Surface Finish

All concrete block shall consist of split face.

202-2.4 Blocks for Keystone Wall

202-2.4.1 Related Documents.

A. Drawings and general provisions of the Contract, including General and Supplementary Conditions and Division 1 Specification Sections, apply to this Section.
B. Standard Specifications for Public Works Construction (SSPWC), Latest Edition

202-2.4.2 Summary.

A. Work shall consist of furnishing and construction of a KEYSTONE Retaining Wall System or approved equal, masonry block retaining wall in accordance with these specifications and in reasonably close conformity with the lines, grades, design, and dimensions shown on the plans.
B. Work includes preparing foundation soil, furnishing and installing leveling pad, unit drainage fill and backfill to the lines and grades shown on the construction drawings.
C. Contractor shall provide all labor, materials, tools, equipment and incidentals for completion of Work.

202-2.4.3 Reference Standards.

A. American Society for Testing and Materials (ASTM)
   1. ASTM C-1372 Specification for Segmental Retaining Wall Units
   2. ASTM D-422 Particle Size Analysis
   3. ASTM D-698 Laboratory Compaction Characteristics of Soil -Standard Effort
   4. ASTM D-4318 Liquid Limit, Plastic Limit and Plasticity Index of Soils
   5. ASTM 0-4475 Horizontal Shear Strength of Pultruded Reinforced Plastic Rods

202-2.4.4 Submittals

A. Contractor shall submit a Manufacturer's certification, prior to start of work, that the retaining wall system components meet the requirements of this specification and the structure design.
B. Contractor shall submit a test report documenting strength of specific modular concrete unit and geogrid reinforcement connection. The maximum design tensile load of the geogrid shall be equal to the laboratory tested ultimate strength of geogrid I facing unit connection at a maximum normal force limited by the "Hinge Height" of the structure divided by a safety factor of 1.5. The connection strength evaluation shall be performed in accordance with NCMA test method SRWU-1.

202-2.4.5 Quality Assurance

A. Contractor shall submit certification, prior to starl of worK., tnat the retaining wall system (modular concrete units and specific geogrid:
   1. Has been successfully utilized on a minimum of five (5) similar projects, i.e., height, soil fill types, erection tolerances, etc.; and
   2. Has been successfully installed on a minimum of 1 million (1,000,000) square feet of retaining walls.
B. Contractor shall submit a list of five (5) previously constructed projects of similar size and magnitude by the wall installer where the specific retaining wall system has been constructed successfully. Contact names and telephone numbers shall be listed for each project.
C. The City of Torrance shall/may provide soil testing and quality assurance inspection during earthwork and wall construction operations. Contractor shall provide any quality control testing or inspection not provided by the City of Torrance. The City of Torrance's quality assurance program does not relieve the contractor of responsibility for quality control and wall performance.

202-2.4.6 Delivery, Storage, and Handling.

A. Contractor shall check all materials upon delivery to assure that the proper type, grade, color, and certification have been received.
B. Contractor shall protect all materials from damage due to jobsite conditions and in accordance with manufacturer's recommendations. Damaged materials shall not be incorporated into the work.

202-2.4.7 Materials.

A. Modular concrete materials shall conform to the requirements of ASTM C1372- Standard Specifications for Segmental Retaining Wall Units.
B. Modular concrete units shall conform to the following structural and geometric requirements measured in accordance with appropriate references:
   1. Compressive strength:~ 3000 psi (21 MPa)
   2. Absorption: 8% (6% in northern states) for standard weight aggregates
   3. Dimensional tolerances: ± 1/8" (3 mm) from nominal unit dimensions not including rough split face, ±1/16" (1.5 mm) unit height - top and bottom planes
   4. Inter-unit shear strength: 1500 plf {21 kN/m) minimum at 2 psi (13 MPa)
   5. normal pressure
C. Modular concrete units shall conform to the following constructability requirements:
   1. Alignment and grid positioning mechanism - fiberglass pins, two per unit minimum
   2. Maximum horizontal gap between erected units shall be ~ 1/2 inch (13 mm)

202-2.4.8 Shear Connections.

Shear connectors shall be 1/2-inch (12 mm) diameter thermoset isopthalic polyester resin-pultruded fiberglass reinforcement rods or equivalent to provide connection between vertically and horizontally adjacent units. Strength of shear connectors between vertical adjacent units shall be applicable over a design temperature of 10 degrees F to+ 100 degrees F (-10 to 40 degrees C).

202-2.4.9 Base Leveling Pad Materials.

Material shall consist of a compacted crushed stone base or non-reinforced concrete as shown on the construction drawings.

202-2.4.10 Unit Drainage Fill.

Unit drainage fill shall consist of clean 1" (25 mm) minus crushed stone or crushed gravel.

202-2.4.11 Reinforced Backfill.

A. The maximum aggregate size shall be limited to 3/4 inch (19 mm) unless field tests have been performed to evaluate potential strength reductions to the geogrid design due to damage during construction.
B. Material can be site-excavated soils where the above requirements can be met. Unsuitable soils for backfill (high plastic clays or organic soils) shall not be used in the backfill or in the reinforced soil mass.
C. Contractor shall submit reinforced fill sample and laboratory test results to the Architect/Engineer for approval prior to the use of any proposed reinforced fill material.

SECTION 203 - BITUMINOUS MATERIALS

203-6 ASPHALT CONCRETE.

203-6.1 General. Add the following:

Asphalt concrete shall be Type Class B-PG-64-10 for the base courses and C2-PG-64-10 for surface courses. For leveling courses of 1-inch thick or greater, asphalt concrete shall be Type Class C2-PG-64-10. For leveling courses between 0.75 inches to 0.99 inches thick, asphalt concrete shall be Type Class D2-PG-64-10.

SECTION 204 – LUMBER AND TREATMENT WITH PRESERVATIVES.

204-1 LUMBER AND PLYWOOD.

Add the following subsection.

204-1.1.5 Cedar.

All lumber used for the split rail fence shall be Western Red Cedar and shall be conform in all particulars to the Standard Grading Rules for Western Lumber, published by the Western Wood Products Association and approved by the American Lumber Standards Committee.

SECTION 206 – MISCELLANEOUS METAL ITEMS.

206-6 CHAIN LINK FENCE.

Replace the entire section with the following:

206-6.1 General. This item shall consist of furnishing and erecting a chain-link fence in accordance with these specifications and the details shown on the plans and in conformity with the lines and grades shown on the plans or established by the Engineer.

206-6.2 Materials.

206-6.2.1 Fabric. The fabric shall be woven with a 9-gauge galvanized steel wire in a 2-inch mesh and shall meet the requirements of ASTM A392, Class 2. The fabric shall be hot-dip galvanized-after-weaving. The green PVC coated fabric shall be class 2 coating fusion-bonded to the galvanized steel wire with a minimum thickness of 7 mils (0.18mm)

206-6.2.2 Barbed Wire. Barbed wire shall be removed where existing and no new barbed wire will be installed with this project.

206-6.2.3 Posts, Post Sleeves, Rails and Braces. Line posts, rails, and braces shall conform to the requirements of ASTM F-1043 or ASTM F 1083 as follows:

Galvanized tubular steel pipe shall conform to the requirements of Group 1A, (Schedule 40) coatings conforming to Type A, or Group IC (High Strength Pipe), External coating Type B, and internal coating Type B or D.

Line posts, rails, and braces shall be galvanized steel pipe conforming to the requirements of ASTM F 1083.

Posts, rails, and braces, with the exception of galvanized steel conforming to F 1043 or ASTM F 1083, Group 1A, Type A, or aluminum alloy, shall demonstrate the ability to withstand testing in salt spray in accordance with ASTM B 117 as follows:

External:	1,000 hours with a maximum of 5% red rust
Internal:	650 hours with a maximum of 5% red rust.

The dimensions of the posts, rails, and braces shall be in accordance with Tables I through VI of Fed. Spec. RR-F-191/3.

206-6.2.4 Wire Ties and Tension Wires. Wire ties for use in conjunction with a given type of fabric shall be of the same material and coating weight identified with the fabric type. Tension wire shall be 7-gauge marcelled steel wire with the same coating as the fabric type and shall conform to ASTM A 824. All material shall conform to Fed. Spec. RR-F-191/4.

206-6.2.5 Miscellaneous Fittings and Hardware. Miscellaneous steel fittings and hardware for use with zinc-coated steel fabric shall be of commercial grade steel or better quality, wrought or cast as appropriate to the article, and sufficient in strength to provide a balanced design when used in conjunction with fabric posts, and wires of the quality specified herein. All steel fittings and hardware shall be protected with a zinc coating applied in conformance with ASTM A 153.

206-6.2.6 Concrete. Concrete shall be class 520-C-2500, as per Section 201 of the Greenbook, with a minimum 28-day compressive strength of 2500 psi.

206-6.2.7 Marking. Each roll of fabric shall carry a tag showing the kind of base metal (steel, aluminum, or aluminum alloy number), kind of coating, the gauge of the wire, the length of fencing in the roll, and the name of the manufacturer. Posts, wire, and other fittings shall be identified as to manufacturer, kind of base metal (steel, aluminum, or aluminum alloy number), and kind of coating.

206-6.3 Construction Methods.

206-6.3.1 Clearing Fence Line. All trees, brush, stumps, logs, and other debris which would interfere with the proper construction of the fence in the required location shall be removed a minimum width of 2 feet(or less if allowed by engineer) on each side of the fence centerline before starting fencing operations. Trees shall be protected in place, unless noted otherwise on the plans. The new fence shall not be stressed by any adjacent shrubs, trees or vegetation and any necessary trimming shall be done to ensure a free-standing fence. With prior approval by the Engineer, the fence line can be slightly shifted to avoid trees by a distance that does not exceed 12 inches from the current fence location.

206-6.3.2 Installing Fence Posts. Method one---All posts shall be set in concrete at the required dimension and depth and at the spacing shown on the plans. The concrete shall be thoroughly compacted around the posts by tamping or vibrating and shall have a smooth finish slightly higher than the ground and sloped to drain away from the posts. All posts shall be set plumb and to the required grade and alignment. No materials shall be installed on the posts, nor shall the posts be disturbed in any manner within 7 days after the individual post footing is completed. Method two – Sleeve over existing solid posts per plans.

Should rock be encountered at a depth less than the planned footing depth, a hole 2 inches larger than the greatest dimension of the posts shall be drilled to a depth of 12 inches. After the posts are set, the remainder of the drilled hole shall be filled with grout, composed of one part Portland cement and two parts mortar sand. Any remaining space above the rock shall be filled with concrete in the manner described above.

In lieu of drilling, the rock may be excavated to the required footing depth. No extra compensation shall be made for rock excavation.

Where posts are located in existing Portland Cement Concrete or Asphalt Concrete Pavement, holes shall be drilled through the pavement. No extra compensation shall be made for pavement drilling. Concrete foundation for chain link fence shall be constructed as shown on the plans.

206-6.3.3 Installing Fence Top Rails. The top rail shall be continuous and shall pass through the post tops. The coupling used to join the top rail lengths shall allow for expansion.

206-6.3.4 Installing Fence Braces. Horizontal brace rails, with diagonal truss rods and turnbuckles, shall be installed at all terminal and gate posts.

206-6.3.5 Installing Fabric. The wire fabric shall be firmly attached to the posts and braced in the manner shown on the plans. All wire shall be stretched taut and shall be installed to the required elevations. The fence shall generally follow the contour of the ground, with the bottom of the fence fabric no less than 1 inch or more than 2 inches from the ground surface. Grading shall be performed where necessary to provide a neat appearance and uniform distance from soil to bottom of fence fabric.

All excavated and removed materials shall be disposed of off-site. Disposal shall be the responsibility of the Contractor.

206-6.4 Method of Measurement.

206-6.4.1 General. Fences will be measured by the linear foot. Measurement will be along the top of the fence from center to center of end posts, including the length occupied by gate openings.

206-6.5 Basis of Payment.

206-6.5.1 Payment for "6-foot High Chain Link or Green Vinyl Chain Link Fence—METHOD TWO" will be made at the contract unit price per linear foot and the price shall be full compensation for furnishing all materials at the locations shown on the plans, and for all preparation, including clearing and grubbing, grading, raising footing elevations, erection, and installation of these materials, and for all labor, equipment, tools, and incidentals necessary to complete the item.

206-6.5.2 Payment for "6-foot High Green Vinyl Utilizing Chain Link Fence—METHOD ONE--(utilizing existing posts)" will be made at the contract unit price per linear foot and the price shall be full compensation for furnishing all materials at the locations shown on the plans, and for all preparation, including clearing and grubbing, grading, painting poles, raising footing elevations, erection, and installation of these materials, and for all labor, equipment, tools, and incidentals necessary to complete the item.

206-6.6 Material Requirements.

ASTM A 121	Zinc-Coated (Galvanized) Steel Barbed Wire
ASTM A 123	Zinc (Hot Galvanized) Coatings on Products Fabricated from Rolled, Pressed, and Forged Steel Shapes, Plates, Bars, and Strip
ASTM A 153	Zinc Coating (Hot-Dip) on Iron and Steel Hardware
ASTM A 392	Zinc-Coated Steel Chain-Link Fence Fabric
ASTM A 446	Specification for Steel Sheet, Zinc-Coated (Galvanized) by the Hot-Dip Process, Structural (Physical) Quality
ASTM A 491	Aluminum-Coated Steel Chain-Link Fence Fabric
ASTM A 569	Steel, Carbon (0.15 Maximum, Percent), Hot Rolled Sheet and Strip Commercial Quality
ASTM A 570	Hot-Rolled Carbon Steel Sheet and Strip Structural Quality
ASTM A 572	High-Strength Low-Alloy Columbium-Vanadium Steels of Structural Quality
ASTM A 585	Aluminum-Coated Steel Barbed Wire
ASTM A 824	Metallic-Coated Steel Marcelled Tension Wire for Use with Chain Link Fence
ASTM B 117	Standard Test Method of Salt Spray (Fog) Testing
ASTM B 221	Aluminum-Alloy Extruded Bars, Rods, Wire Shapes and Tubes
ASTM F 668	Poly (vinyl Chloride) (PVC)-Coated Steel Chain-Link Fence
ASTM F 1043	Strength and Protective Coatings on Metal Industrial Chain Link Fence Framework
ASTM F 1083	Pipe, Steel, Hot-Dipped Zinc-coated (galvanized) Welded, for Fence Structures
ASTM F 1183	Aluminum Alloy Chain Link Fence Fabric
ASTM F 1234	Protective Coatings on Steel Framework for Fences
ASTM G 23	Operating Light-Exposure apparatus (Carbon-Arc Type) with and without Water for Exposure of Nonmetallic Materials
ASTM G 26	Operating Light-Exposure Apparatus (Xenon-Arc Type) with and without Water for Exposure of Nonmetallic Materials
ASTM G 53	Operating Light- and Water-Exposure Apparatus (Fluorescent UV-Condensation Type) for Exposure of Nonmetallic Materials
Fed. Spec RR-F-191/3	Fencing, Wire and Post, Metal (Chain-Link Fence Posts, Top Rails and Braces)
Fed. Spec RR-F-191/4	Fencing, Wire and Post, Metal (Chain-Link Fence Accessories)

Add the following Sections:

206-7 WROUGHT IRON FENCE.

206-7.1 General.

206-7.1.1 Work Included.

The contractor shall provide all labor, materials, and appurtenances necessary for installation of the industrial ornamental steel fence system.

206-7.1.2 Related Work.

Concrete: Class 520-C-2500, Greenbook Sec. 201 and 303
Earthwork: Greenbook Section 300-2, "Unclassified Excavation"

206-7.1.3 System Description.

The contractor shall supply a total industrial ornamental steel fence system that complies with the drawing details listed in the plans for Henrietta Basin. The system shall consist of all components specified in the details including pickets, rails, posts, foundations, and hardware.

206-7.1.4 Quality Assurance.

The contractor shall provide laborers and supervisors who are thoroughly familiar with the type of construction involved and materials and techniques specified.

206-7.1.5 References.

ASTM A653/A653M	Standard Specification for Steel Sheet, Zinc-Coated (Galvanized) or Zinc-Iron Alloy Coated (Galvannealed) by the Hot Dip Process
ASTM A924/A924M	Standard Specification for General Requirements for Steel Sheet, Metallic-Coated by the Hot Dip Process
ASTM A1011/A1011M	Standard Specification for Steel, Sheet and Strip, Hot-Rolled, Carbon, Structural, High-Strength and High-Strength Low-Alloy with Improved Formability
ASTM B117	Practice for Operating Salt Spray (Fog) Apparatus
ASTM D523	Test Method for Specular Gloss
ASTM D822	Practice for Conducting Tests On Paint and Related Coatings and Materials Using Filtered Open-Flame Carbon-Arc Light and Water Exposure Apparatus
ASTM D1654	Test Method for Evaluation of Painted or Coated Specimens Subjected to Corrosive Environments
ASTM D2244	Test Method for Calculation of Color Differences From Instrumentally Measured Color Coordinates
ASTM D2794	Test Method for Resistance of Organic Coatings to The Effects of Rapid Deformation (Impact)
ASTM D3359	Test Method for Measuring Adhesion by Tape Test

206-7.1.6 Submittal.

Shop drawing submittal shall be made per Section 2-5.3 prior to installation. Substitutions can be submitted to the Engineer for approval.

206-7.1.7 Product Handling and Storage.

Upon receipt at the job site, all materials shall be checked to ensure that no damage occurred during shipping or handling. Materials shall be stored in such a manner to ensure proper ventilation and drainage, and to protect against damage, weather, vandalism, and theft.

206-7.2 Materials.

206-7.2.1 Manufacturer.

The industrial ornamental steel fence system shall match the existing fencing system as specified in the drawing details for Henrietta Basin. One possible manufacturer is:

Mega Met., 1443 Potrero Avenue, So. El Monte, Ca., 91733 626-279-6200

206-7.2.2 Materials.

A. Steel material for fence framework (i.e., tubular pickets, rails, and posts) shall conform to the requirements of ASTM A1011/1011M, with a minimum yield strength of 50,000 psi (344 MPa). Posts (3" square)and rails (1"x2"-top, 2"x2"-bottom)shall be 12 gauge and the 1" square pickets shall be 14 gauge.

B. The coating on the new panels, posts and rails supplied by the contractor shall be powder coated per manufacturer's specs with a 2.5-3.5 thick, flat black colored coating. All field welds shall be ground smooth and painted with the above mentioned DTM paint.

C. Concrete for fence posts shall be class 520-C-2500 as per Section 201 of the Greenbook, with a minimum compressive strength of 2500 psi. Posts shall be embedded at least 30" into 36" deep, 8" min diameter concrete footing.

206-7.3 Execution.

206-7.3.1 Preparation.

All new installation shall be laid out by the contractor in accordance with the construction plans.

206-7.3.2 Installation.

Fence posts shall have a depth of 36" and be set with a spacing of 10.5' .

206-7.3.3 Cleaning.

The contractor shall clean the jobsite of excess materials.

206-7.4 Method of Measurement.

Wrought Iron Fence shall be measured by the number of linear feet. Measurement will be made along the top of the fence line from center to center of end posts.

206-7.5 Basis of Payment.

Wrought Iron Fence shall be paid by the linear foot, this shall include but not limited to all labor, materials and other items necessary for installation complete in place.

206-8 TRENCH GRATE COVERS.

A trench grate cover shall be installed at the crossing of the v-ditch channel near the south entrance to Entradero Basin. Heavy duty welded steel grating shall be used, Model No. THA-48-EZ (B) with tamper resistant bolt down capability in frame embedded in PCC rectangular trench, ADA rated spacing and H-20 load rating, as manufactured by Grating Pacific, Los Alamitos, California, or an approved equal. Additional specifications shall be obtained from the manufacturer. Heavy duty grating shall be capable of carrying an H-20 load on a 4' clear span. Open ends of grating shall be banded. All trench frames and grating shall be hot-dipped galvanized after fabrication in accordance with ASTM specification A-123.

SECTION 207 – PIPE

207-9 IRON PIPE AND FITTINGS.

207-9.2 Ductile Iron Pipe for Water and other Liquids.

207-9.2.1 General. Replace the last paragraph with the following:

Ductile iron pipe (DIP) shall comply with AWWA C150 and C151. Unless otherwise specified on the Plans or Specifications, the minimum pipe wall thickness shall be equal to Pressure Class 350.

207-9.2.2 Pipe Joints. Replace the entire subsection with the following:

Unless otherwise specified on the Plans or Specifications, all pipe joints shall be ductile iron and shall comply with the requirements of Table 207-9.2.2 (A) of these Special Provisions. Pipe joints shall be rated for a working pressure of 350 psi.

TABLE 207-9.2.2 (A)

Type of Joint	Specifications
Rubber Gasket Push-on Joint	AWWA C111
Mechanical Joint	AWWA C111
Flanged Joint	AWWA C153 or C110
Flanged Joint (Threaded Flanges)	AWWA C115

Gaskets shall be 1/8-inch thick and made of styrene butadiene rubber (SBR). Gaskets shall conform to AWWA C111 and 208-1.2. Flange gaskets shall be full-face, with bolt holes pre-punched and rated for 350 psi working pressure.

Flange assembly bolts shall be square head machine bolts conforming to ANSI/ASME B18.2.1 with heavy hexagon nuts conforming to ANSI/ASME B18.2.2. Bolts and nuts shall be threaded according to ANSI/ASME B1.1, course thread series, Class 2 fit. Bolt length shall be such that after joints are made up, the bolts shall protrude through the nut by no more than ½-inch. Bolts for use in buried installations shall be stainless steel Type 316. Bolts for use in submerged installations shall be stainless steel Type 304.

207-9.2.2.1 Restrained Joints. Add the following subsection:

Restrained joints for piping 6 inches and larger shall be American Cast Iron Pipe Company "MJ Coupled Joint," "Lok-Ring" or "Flex-Ring," U.S. Pipe "TR-Flex," or equal. All weldments for restrained joints shall be tested by the liquid penetrant method per ASTM E 165.

Alternatively, restrained joints in 12-inch diameter and smaller buried piping shall be American Cast Iron Pipe Company "Fast-Grip," U.S. Pipe "Field-lok" gasket within Tyton joint pipe and fittings, or equal. Joint restraint shall be certified to four times rated pressure of 200 psi by Factory Mutual.

207-9.2.3 Fittings. Replace the entire subsection with the following:

Unless otherwise specified on the Plans and Specifications, all fittings shall be ductile iron and manufactured in accordance with AWWA C153 or C110. Fittings shall be furnished with restrained joints or thrust blocked and anchored in accordance with City of Torrance Standard Plan No. T713. Fittings shall have a minimum pressure rating of 250 psi working pressure.

Sleeve-type couplings shall be MJ x MJ, 12-inches minimum length and rated 250 psi working pressure. Romac type sleeves may be used where approved by the Engineer.

Special fittings are not allowed without the prior written approval from the Engineer.

Rubber gaskets, bolts and nuts shall conform to 207-9.2.2 of these Special Provisions.

207-9.2.4 Lining and Coating. Add the following:

Cement for mortar lining shall be Type II or V. Fly ash or pozzolan shall not be used as a cement replacement.

Fittings lined and/or coated in the field will not be accepted as conforming to AWWA C104, C151, or C153.

The exterior surfaces of ductile iron pipe, fittings, valves and appurtenances that will be exposed to the atmosphere inside structure or above ground shall be thoroughly cleaned and painted with a rust-inhibitive primer conforming to the requirements of 210-1.8 of these Special Provisions.

207-9.2.6 Polyethylene Encasement for External Corrosion Protection. Replace the entire subsection with the following:

All ductile iron pipes, fittings, valves and appurtenances shall be wrapped with 8 mil. polyethylene film. The polyethylene film shall be pulled snugly around the pipes, fittings, valves and appurtenances and held in place with a 2-inch wide polyethylene adhesive tape in accordance with AWWA C105 Method A.

Add the following subsection:

207-25 POLYVINYL CHLORIDE (PVC) PRESSURE PIPE

207-25.1 General. This subsection applies to polyvinyl chloride (PVC) pressure pipe for the transmission and distribution of reclaimed water. PVC pipe shall be of the size, type, pressure or class as shown on the Plans or Specifications. PVC pressure pipes, 4-inches through 12-inches in diameter, shall conform to the requirements of AWWA C900, Class 200 minimum. PVC pipes greater than 12 inches but less than or equal to 18 inches in diameter shall conform to the requirements of AWWA C905.

207-25.2 Material Requirements. Material used to produce the pipe shall be made from Class 12454-B, rigid polyvinyl chloride compounds, or better, as outlined in ASTM D1784, with an established hydrostatic design basis (HDB) equal to or greater than 4,000 psi for water at 73.4 degrees F, and a wall thickness to dimension-ratio (DR) series 14.

207-25.3 Joints. Joints for PVC pressure pipe shall be integral bell and spigot joints with elastomeric gaskets. Elastomeric gaskets shall comply with the requirements specified in ASTM F477. All pipes shall have a home mark on the spigot end to indicate proper penetration when the joint is made.

207-25.4 Inspections and Certifications. All PVC pressure pipe shall be manufactured in strict accordance with AWWA C900 or C905 and the applicable ASTM standards listed therein. The manufacturer shall furnish an affidavit that all delivered materials comply with the requirements of the above standards.

207.25.5 Fittings. All fittings for PVC pressure pipes shall be ductile iron and shall be in accordance with AWWA C153 and 207-9.2.3 of these Special Provisions. Fittings shall be lined and coated as specified in 207-9.2.4 and encased with polyethylene in accordance with 207-9.2.6 of these Special Provisions. All fittings shall be restrained joint type or shall be thrust blocked and anchored in accordance with City of Torrance Standard Plan No. T713. Bolts shall be stainless steel Type 316 in accordance with ASTM A 276. Bell size shall be for Class 200 cast iron equivalent PVC pressure pipe, including the rubber-ring retaining groove.

207-25.6 Polyvinyl Chloride (PVC) Pipe - 1-Inch Through 3-Inch. PVC pipe shall be made from all new rigid unplasticized polyvinyl chloride and shall be Normal Impact (Type I) Schedule 40, unless otherwise shown. Elbows and tees shall be of the same material as the pipe. Joints shall be solvent-welded in accordance with the manufacturer's instructions. Expansion joints or pipe bends shall be provided to absorb pipe expansion over a temperature range of 100 degrees F. PVC pipe shall be approved for reclaimed water use.

207-25.7 Service Saddles. All service connections to DIP water main shall be constructed with bronze service saddles, double-strap type, with CC threads for receiving a bronze corporation stop. Service saddles for PVC pressure pipe shall be manufactured to provide full support around the circumference of the pipe and have a minimum width of 2 inches along the axis of the pipe in order to provide full bearing and prevent distortion of the pipe when the saddle is made tight.

Service saddles shall be Mueller H-13400, James Jones J-996, or approved equal.

207-25.8 Reclaimed Water Pipe. All PVC reclaimed water pipe shall be purple colored PVC pipe meeting the requirements of 207-25.1 of these Special Provisions. All such piping shall be purple with black or white stenciling. The stenciling shall appear on both sides of the marking "CAUTION, RECLAIMED WATER, DO NOT DRINK" in 5/8-inch letters repeated every 12 inches. As an alternative to purple pipe, PVC reclaimed water pipe could be installed with a purple identification tape as shown on City of Torrance Standard Plan No. T801. Identification tape shall be purple in color with the words, "RECLAIMED WATER - DO NOT DRINK" imprinted in 5/8-inch letters repeated every 12 inches.

207-25-9 Warning Pipe Identification Tape. Provide warning tape and install above each pipe as shown on City of Torrance Standard Plan No. T801 and as follows: 4 mil, or high molecular weight 100% virgin polyethylene with no less than 2,000 lbs. tensile strength per 12-inch width. Tape shall be 6 inches wide for 8-inch diameter pipe and 4 inches wide for 6-inch diameter pipe. Tape shall be high visibility color coded with permanent printed message, "CAUTION - RECLAIMED WATER LINE BELOW," suitable for burial. Message shall appear every 36 inches.

207-25.10 Tracer Wire for Non-Metallic Pipelines. Copper tracer wire shall be installed with all non-metallic pipelines, centered and just above the top or crown of the pipe for the purpose of providing a continuous signal path for electronic pipe locators used to determine pipe alignment after installation. The copper wire shall be No. 12 cu. with HMWPE insulation. The wire shall be electrically continuous throughout the entire pipe system including adjacent service line assemblies. At service lines, the wire shall be extended up the pipe and secured by a cable lug under the top nut of one set of bolts. At cul-de-sacs, the wire shall be placed in the same trench with the last long side service lateral and extended into the meter box. All splices shall be wrapped with PVC tape and the wire shall be tied to the pipe at 10-foot intervals with plastic adhesive tape. Tracer wire shall be extended to surfaces. The Contractor shall provide the CITY with results of electrical continuity test.

207-25.11 Warning Tags. Warning tags shall be installed on all appurtenances in vaults or aboveground, such as, but not limited to, air release valves, blow-off valves, valve boxes, and meters. Warning tags shall be weatherproof plastic, 3-inch by 4-inch, with purple background and black and white lettering stating "CAUTION: RECLAIMED WATER - DO NOT DRINK" on one side and "PRECAUSION: AGUA IMPURA - NO TOMAR" on the other side. Tags shall be attached to each device with a nylon tie wrap. Warning tags shall be as manufactured by T. Christy Enterprises, Inc., or approved equal.

All valve boxes for recycled water facilities shall have the inscription "RW - CITY" on the valve box cover as shown on City of Torrance Standard Plan No. T806.

SECTION 210 – PAINT AND PROTECTIVE COATINGS

210-1 PAINT.

Add the following subsections:

210-1.8 Paint for Exterior Surfaces of Ductile Iron Pipe. The exterior surfaces of ductile iron pipe, fittings, valves and appurtenances that will be exposed to the atmosphere inside structure or above ground shall be painted with three coats of "Rustoleum No. 7773" or approved equal. The final coat color shall be selected by Engineer or identified on plans. Total thickness of coating shall be 6 mils.

210-1.9 Coating for Valves. Except as otherwise provided, all ferrous surfaces (excluding non-corrosive surfaces) in water passages of all valves 4-inches and larger shall be fuse coated with an epoxy coating in accordance with the "Standard for Protective Epoxy Interior Coatings for Valves and Hydrants" (AWWA C550).

210-1.10 Painting and Coating of Reclaimed Water Valves. Metal valves (except bronze and stainless steel valves) located in vaults and structures shall have a zinc prime coat, fusion epoxy (interior of valves only) intermediate and finish coat.

210-1.10.1 Surface Preparation. Surface preparation shall conform to the following requirements:

Prime Coat: Self-curing, two-component inorganic zinc rich coating recommended by the manufacturer for overcoating with a epoxy finish coat. Minimum zinc content shall be 14 pounds per gallon. Apply to a thickness of 3 mils. Products: Tnemec N90E92, Porter 311 Zinc-Lock, Ameron Dimetcote 9, or approved equal.

Intermediate and Finish Coat: 100 percent solids, thermosetting or catalytic, fusion bonded, dry powder epoxy, suitable for the intended service as recommended by the manufacturer, Scotchkote 134 or approved equal.

Valves shall be coated on their interior metal surfaces excluding seating areas and bronze and stainless steel pieces. Sandblast surfaces in accordance with SSPC SP-5. Remove all protuberances, which may produce pinholes in the lining. Round all sharp edges to be coated. Remove any contaminants, which may prevent ponding of the lining. Coat the interior ferrous surfaces using one of the following methods:

1) Apply powdered thermosetting epoxy per the manufacturer's application recommendations to a thickness of 10 to 12 mils.

2) Apply two coats of catalytically setting epoxy (Keysite 740, Gilpon, or equal) to a dry film thickness of 10 to 12 mils total. Follow the paint manufacturer's application recommendations including minimum and maximum drying time between required coats.

All epoxy lining shall be fusion epoxy applied by the manufacturer. Coat interior surfaces of cast iron valves at the place of manufacturer. Do not coat seating areas and plastic, bronze, stainless steel, or other high alloy parts.

210-1.11 Reclaimed Water Color Coding. It is required that above-ground or exposed facilities be color coded to differentiate reclaimed water facilities from potable water or wastewater facilities as follows:

Valve Box Covers	Two Coats Purple (Pantone 512)
Air Valves and Piping	Two Coats Purple (Pantone 512)
Blow-Offs/Covers	Two Coats Purple (Pantone 512)

210-1.12 Concrete Vaults and Manholes. The interior and exterior of concrete vaults and manholes shall be coated with crystalline waterproofing. Crystalline waterproofing shall be cementitious coating containing components that will diffuse into the concrete by water, react with lime, and create an impervious, waterproof, calcified barrier in the substrate. Technical requirements are as follows:

1) Permeability at 2.6 x 10^{-8} cm/sec (2 coats) minimum per Army COE (CRD-C 48-55 or CRD-6 48-73).

2) Compatibility; shall produce no degradation of substrate.

SECTION 212 – LANDSCAPE AND IRRIGATION MATERIALS

212-1 LANDSCAPE MATERIALS. Add the following:

All work specified in this section shall conform to the applicable requirements of ANSI Standard Z60.1-1980, " Nursery Stock," and to the rules and grading provisions adopted by the American Association of Nurserymen, Inc.

212-1.1 Topsoil.

212-1.1.1 General. Add the following:

Unless otherwise specified on the Plans or required by the Engineer, topsoil shall be Class "C" in accordance with the requirements of 212-1.1.4. Imported soil, if required, shall be Class "A" topsoil in accordance with the requirements of 212-1.1.2.

The Contractor shall provide an Agricultural Soil Suitability Report for topsoil to be furnished, and the requirements for fertilization and amendments as specified herein may be modified as necessary by the Engineer prior to start of the work of this section.

212-1.2 Soil Fertilizing and Conditioning Materials

212-1.2.1 General. Add the following:

Contractor shall have import soil and the soil of the site tested for fertility, agricultural suitability, and appraisal by Soil and Plant Laboratory Inc. (714) 282-8777, or approved equal.

1. Submit a copy of the Planting Plan and Plant Legend to the laboratory with the samples.

2. Soil report shall include:
   a. pH measurement.
   b. Nutrients and elements:
      1) Measurement (low, medium, high) of: Boron, calcium, copper, iron, magnesium, manganese, molybdenum, phosphorus, potassium, sodium, sulfur, and zinc.
      2) Analyze saturation extract for: calcium, magnesium, sodium, boron, chloride, phosphorus, nitrate and sulfate.
      3) Trace metals: Aluminum, arsenic, cadmium, chromium, cobalt, lead, lithium, nickel, selenium, silver, strontium, tin and vanadium.
      4) The presence of calcium carbonate and/or magnesium carbonate.

c. Soil Texture (gravel, sand, silt and clay). Determine organic matter content by the measurement of organic carbon. The quality of the organic matter shall be determined by measuring organic carbon and total nitrogen.
   1) Methods of Soil Analysis, Part 1, Physical and Mineralogical Methods, Soil Science Society of America, Inc., 1986, chapter 36, pgs 901-926 and Methods of Soil Analysis, Part 3 Chemical Methods, Soil Science Society of America, Inc, 1996, chapter 34, pages 965-977 & pages 1001-2 and chapter 37, page 1088

d. Interpretation and recommendations for correction of nutritional deficiencies/ excesses and potential toxicities.

3. Soil shall be tested from a minimum of four (4) locations per acre of planted area. Contractor shall record locations where samples were taken.

4. A copy of the soil test results shall be submitted to the Owner and Architect before work begins.

5. Contractor shall pay cost of soil tests.

212-1.2.3 Commercial Fertilizer. Add the following:

A specially formulated, slow release fertilizer provided in planting packets will be planted with container plants to aid establishment of the nursery grown stock. The packets are buried below the container plant, and therefore their nutrients are available only to the plants and not weedy seedlings that may develop at the soil surface. Each packet (10 grams weight) shall contain a blend of 16% total nitrogen, 6 percent available phosphoric acid, and 8% soluble potash plus minor nutrients. The nitrogen, phosphorous, and potassium shall be coated with a polyurethane coating to provide 15.69% coated slow release nitrogen, 5.09 % coated slow release available phosphate, and 6.8% slowly available soluble potash. Bio-pacs® meeting these specifications are available from Reforestation Technologies Inc.

212-1.2.4 Organic Soil Amendment. Delete third and fourth paragraph and add the following:

Type I organic soil amendment shall be used. The Contractor shall supply the Engineer with a sample of the proposed amendment accompanied by a laboratory analytical analysis from a testing agency registered by the State, which states that the amendment complies with the specifications.

212-1.2.5 Mulch. Add the following after the first paragraph and delete the remaining subsection:

Bark mulch shall be shredded cedar, pine, or fir bark or equal commercial product. Typical mulch size shall be three inches by one-half inch (3" x ½"). Submit two (2) samples to the Engineer for approval prior to installation. The material shall be free of seeds, debris, and deleterious materials, and shall have a rich brown color when supplied. Mulch can be provided by the CITY at the City Yard. The Contractor would need to specify a quantity and make the request two weeks in advance and shall haul the required mulch from the City Yard to the placement site.

212-1.4 Plants.

212-1.4.1 General. Add the following:

All plants furnished by the Contractor shall be true to type or name as shown on the Plans and shall be tagged in accordance with the standard practice recommended by the Agricultural Code of the State of California; however, determination of plant species or variety shall be made by the Engineer, whose decision shall be final.

Contract growing of all container plants shall be conducted by a local experienced native plant nursery. Substitution of plant material at the time of planting depends solely upon the discretion of the Project

restoration ecologist (Landscape Architect). Any substitutions that are approved will be documented in the annual monitoring report.

All plants shall have been grown in nurseries that have been inspected by the governing authorities. Inspection of plant materials required by City, County, State, or Federal authorities shall be the responsibility of the Contractor, and it shall have secured permits or certificates prior to delivery of plants to site. Certificates of inspection shall be filed with the Engineer. All plant materials will be inspected and approved as healthy, disease free, and of proper size prior to delivery and planting. Overgrown, root-bound container stock will be rejected.

The Contractor shall obtain clearance from the County Agricultural Commissioner, as required by law, before planting plants delivered from outside the County in which they are to be planted. Evidence that such clearance has been obtained shall be filed with the Engineer.

Plants shall be subject to inspection and approval or rejection by the Engineer at place of growth and/or upon delivery to the site at any time before or during progress of the work. Inspections shall include:

a) Quantity, quality, size, and variety;

b) Ball and root condition;

c) Latent defects and injuries resulting from handling, disease and insects; and

d) Uniformity of plant materials.

The Contractor shall notify the Engineer seventy-two (72)) hours before the delivery of plant material, so the plants can be reviewed prior to planting.

The Contractor is responsible to coordinate contract growing any plant material that is not readily available at local nurseries. The Contractor shall research the availability of every plant at the beginning of the project to allow sufficient time to contract grow plant material for installation without delays. Contract grown plant material shall be grown to the size indicated on the plans and delivered to the site in a healthy and vigorous condition.

212-1.4.2 Trees. Add the following:

Trees shall be of the type and size as shown on the Plans or specified in the Specifications.

For single-trunk trees: the trunk shall be straight, slightly tapered at the crown, free of disfigurements or gnarls and well hardened off. The tree shall be free of disease and parasites.

For multi-trunk trees: the trunk shall be well hardened off and the tree free of disease and parasites.

212-2 IRRIGATION SYSTEM MATERIALS

212-2.1 Pipe and Fittings.

212-2.1.1 General. Replace the entire subsection with the following:

Irrigation pipe materials and fittings shall be as designated on the Plans and shall comply with 212-2.1.3.

Add the following subsection:

212-2.1.6 Swing Joint Risers. Risers shall be ¾ inch double swing type per APWA Standard Plan No. 517-1 modified to allow substitution of Schedule 80 PVC for galvanized steel pipe and 4" minimum nipples. At the sole discretion of the Engineer, swing pipe per Rainbird Model SP-100 or approved equal may be substituted for swing joint risers.

212-2.2 Valves and Valve Boxes.

212-2.2.4 Remote Control Valves. Add the following:

Electric Remote Control Valves shall be Bermad, 710 series, FVM or approved equal.

212-2.2.6 Quick-coupling Valves and Assemblies. Add the following:

Quick couplers shall be Rainbird Model No. 33D-LRC or approved equal.

212-2.2.7 Valve Boxes. Replace the entire subsection with the following:

Valve boxes shall be made of durable green plastic with locking lids in accordance with APWA Standard Plan No. 506-1. Boxes shall be sized to give maintenance freedom and access. All valve box lid locks shall use a common key.

212-2.3 Backflow Preventer Assembly. Add the following:

The backflow preventer shall be FEBCO Model No. 825Y or approved equal conforming to the requirements of Los Angeles County Department of Health Services.

212-2.4 Sprinkler Equipment. Add to the following:

The full-circle, part-circle or rectangular spray nozzles shall be capable of meeting the requirements for the area or radius shown on the Plans. The pop-up sprinklers shall be Toro, Series 640 or approved equal. Spray plastic nozzles shall be Toro, Series 570 Stream Spray Nozzles or approved equal. Bubbler heads shall be Toro, Series 570 Flood Bubbler Nozzles or approved equal.

Add the following subsection:

212-2.5 Pressure Relief Valve. Pressure Relief Valve shall be Cash Acme Model No. F-72 or approved equal; and shall be set at 125 psi.

212-3 ELECTRICAL MATERIALS

212-3.2 Conduit and Conductors.

212-3.2.2 Conductors. Add the following:

Neutral Wires: (White (#12 AWG). Do not interconnect neutral wires between controllers.

Spare Wires: Two (2) red and one (1) white spare wires (#12 AWG) shall be run in each direction from furthest valve of furthest valve manifold on each mainline run to each controller.

Loop 36-inch excess wire into each single valve box and into one valve box in each group of valves.

Pilot wires: (14 AWG) or larger as recommended by controller manufacturer for the corresponding run distance. Contractor shall field verify run distances prior to installation.

Wireless Connections: Neutral, pilot, and spare wires shall be installed with two-foot (2') excess coiled wire length at each end enclosure, valve box or pull box. For low voltage installations, a continuous wire shall be used between the controller and remote control valves. Each and every wire splice shall be soldered (using 60-40 solder) together, then encased in the waterproofed epoxy of the "Scotch-Pac" or "Pen-Tite" connectors. Wire splices shall be made only in valve or pull boxes. Under no circumstances shall splices exist without prior approval from the Engineer.

Add the following subsections:

212-3.4 Controller Enclosure. The enclosure shall be per the irrigation legend on the irrigation drawings.

212-3.5 Hydraulic Tubing. Hydraulic tubing shall be ¼ inch polyethylene tubing, Toro Model 900-14 or approved equal. Splicing shall be with waterproof plastic coupling devices, Toro Model 900 or approved equal. The Contractor shall remove all damaged tubing and all tubing that has interior deposits resulting from Contractor's construction activities.

SECTION 212-4 RUSTIC LOG BENCHES

Non-cracking cedar wood. Finish shall be smooth with smooth radius edges. Stainless steel inbed for securing in concrete footing. The log seat and base shall be sealed, using 'Aquaseal II for Wood' or equal. Apply two coats, wet on wet, per manufacturer's recommendations.

Coordinate construction with Crenshaw Lumber- Ed Wyth (310) 613-1518, or equal.

SECTION 212-5 PET WASTE DISPENSER

'Dogipot #1003-L' by PROPET Distributors (800) 364-7681, or equal. Install in 8"diameter x 18" depth concrete footing. Install per manufacturers recommendations. 100 roll cases of disposable bags shall be provided to the City.

SECTION 213 – ENGINEERING FABRICS

213-2 GEOSYNTHETICS.

213-2.1 General. Replace the first paragraph with the following:

Geotextile fabric shall be non-woven conforming to the requirements of AASHTO Designation M288-99.

Delete the last two paragraphs.

213-2.2 Physical Properties. Replace the entire subsection with the following:

All non-woven geotextiles shall meet the requirements of Type 250N indicated in Table 213-2.2 (A).

213-2.3 Identification. Delete the last sentence.

Add the following section:

SECTION 215 - RECLAIMED WATER FACILITIES

Recycle water mains and appurtenances shall be per West Basin Municipal Water District, Central Basin Municipal Water District, Design Criteria, Supplemental Standard Specifications, and Standard Drawings for Reclaimed Water Facilities, January 1999 edition or latest version available at 17140 S. Avalon Boulevard, Suite 210, Carson, CA 90746-1296. Comply with all Water District requirements. Comply with all County of Los Angeles Public Health requirements shown in Appendix VII.

Add the following section:

SECTION 217 - MISCELLANEOUS DRAINAGE FACILITIES

217-1 CURB OPENINGS AND GRATING CATCH BASINS.

Modify the subsections to read:

217-1.1 General.

The work specified in this subsection includes the furnishing and installation of the Automatic Retractable Screens (ARS) for catch basin opening and Connector Pipe Screen for the pipe outlet, as described herein, into existing storm drain catch basins. These devices are intended to reduce the amount of trash entering the storm drain system through curb opening catch basins or a curb opening catch basin with gratings. All devices shall conform to the following requirements:

1. In curb openings with support bolts, multiple units shall be installed between the existing support bolt(s) to span the entire curb opening width. Each screen shall be hinged independently of the other screens and shall not be attached to any other screen. The maximum clear opening between adjacent screens, adjacent fixed frame members, or between the screens and support bolts shall be 1/2-inch. A maximum of two adjacent screens (units) may be linked and operated by a single mechanism if the vertical internal dimension of the catch basin at the upstream end is not big enough to permit the mechanism to operate the first screen.

2. The existing support bolt(s) shall be protected in place and the operation of the units shall not be hindered by the support bolt(s).

3. The existing horizontal protection bar shall be removed in all curb opening catch basins prior to the installation of an ARS.

4. All parts of ARS units shall installed as closely as possible to align with the projected curb face.

5. The catch basin opening screen cover may be installed from inside the catch basin and the installation shall be perpendicular to the street surface.

6. All nuts and bolts shall be secured by a liquid industrial hardener such that nuts and bolts may only be removed by heat application.

7. A catch basin opening screen cover frame may form the perimeter of the opening screen cover.

8. The catch basin opening screen covers shall be removable solely by entry into the catch basin. All parts of the screen cover shall be sized to fit through the maintenance hole or curb opening when the unit is disassembled.

9. The catch basin opening screen covers shall have a means to manually open and close them from the street-side and any necessary tools to open screen covers shall be provided to each City.

10. The catch basin opening screen closing-locking mechanism shall be designed to open when the surface street runoff reaches fifty percent (50%) of the curb height measured directly in front of the catch basin curb opening. The catch basin screen cover shall open towards the interior. The closing-locking mechanism shall remain opened as long as the flow depth exceeds 4 inches and gradually return to the lock position as the flow recedes.

11. The catch basin opening screen covers' closing mechanism shall be designed to close/lock at a slow speed to ensure that as the screen cover returns to its original closed perpendicular position that no trash (i.e., plastic bottles, soda cans) will become ensnared between the screen cover and the bottom lip of the catch basin opening.

12. The vertical distance between the screen gate and the upper underside of the curb opening shall be maintained for overflow at two inches (2"), for 6" curb face and 3" for 8" curb face, unless otherwise required by a City. The vertical distance between the screen gate and the lower portion of the curb opening shall not exceed one half inch (1/2"). The horizontal distances between the screen gate and the side walls shall not exceed one half inch (1/2").

13. The placement of any anchoring system to the concrete walls of the catch basin shall be embedded a minimum of three (3") inches. All anchoring sleeves shall be of S-304 stainless steel.

14. The catch basin opening screen cover shall remain in the closed and locked position during periods of no rain. The use of torsion springs as a locking mechanism shall not be allowed.

15. The catch basin opening screen cover shall not have any components, accessories, frames, or brackets within the catch basin that will prevent the installation of vertical catch basin inserts or that inhibit the operation of existing catch basin inserts. No catch basin opening screen cover component shall hang lower than the bottom lip of the catch basin curb opening.

16. No catch basin opening screen cover component shall obstruct the catch basin maintenance opening found on the deck of the catch basin.

17. The bottom horizontal lip of the curb opening catch basin shall not be used as an anchor point for the opening screen cover.

217-1.2 Submittals.

Prior to initiating fabrication, the Contractor shall submit shop drawings, catalog cuts, and other information required which completely describes the units to be installed under this Contract per Subsection 2-5.3 and as required for Los Angeles County Flood Control District permits. The following information shall be included to this submittal for each type of unit:

1. Detailed shop drawings and descriptions of all components of the unit, showing all dimensions, materials used, connection details, assembly details, and mounting details. The shop drawings shall clearly describe the mechanical operation of the unit.

2. Calculations shall be provided with the force diagrams that demonstrate that all parts have been properly sized to develop the necessary forces to operate the various mechanisms that automatically open the screen with the flow of water and keep it open when the catch basin floods, and to keep it closed when subject to a force of 25 lbs. The force diagrams and calculations shall be stamped by a Civil or Mechanical Engineer licensed in the State of California.

3. Installation details and instructions.

4. Warranty information, including contact information for replacement parts.

5. Performance and test data, including a list of existing installations with a contact person from the owner of the facility in which each unit is installed and the date of installation.

6. Recommended cleaning and maintenance schedule and procedures to maintain the proper functioning of the unit, including replacement schedule of parts for the entire unit.

7. Onsite Testing Procedures: Testing procedures in accordance with 217-4.5 for ARS units intended to operate automatically.

217-1.3 Manufacturer's Warranty.

All devices included in Section 217 of these Special Provisions shall be covered by a three (3) year manufacturer's warranty, starting on the date of acceptance of the project by the AGENCY. The warranty shall cover the devices against corrosion, excessive wearing of moving parts, and operational malfunction for any reason. The manufacturer shall provide, at no cost to the AGENCY, all labor, material and equipment required to repair or replace the devices during the warranty period including, but not limited to, calibration and adjustment of moving parts to ensure the device operates properly. There shall be no limit to the number of repairs or replacements required during the warranty period to ensure that the devices operate properly.

217-1.4 Preliminary Inspection and Measurement.

The Contractor shall inspect each catch basin included in this Contract for unsound conditions such as but not limited to: a) exterior damage, b) bent or missing protection bars, c) damaged manholes, d) damaged face plate, e) other physical damage, f) catch basins requiring protection bars per APWA Standard Plan 310-1. Since these types of conditions may interfere with the installation of retrofit devices, a list of catch basins with such unsound conditions shall be submitted to the Engineer. The list shall also identify catch basins that, based on inspection, the Contractor determines are not suited for the type of device listed in the contract documents.

Any subsequently disclosed damage to a catch basin not included in the list submitted by the Contractor will be assumed to be the result of the Contractor's clean out or installation operations and shall be corrected at the Contractor's expense.

The dimensions shown in the contract documents are approximate and included for bid purposes only. The Contractor shall make detailed measurements of each catch basin for the proper fabrication of the devices. Improper fabrication of devices due to errors in the Contractor's measurements shall be corrected at its own expense. The Contractor shall submit written records of its measurements to the Engineer or as required to obtain Los Angeles County Flood Control District permits. The Contractor shall identify in the measurement records catch basins that, based on actual measurements, are not suited for the type of device listed in the contract documents.

217-2 CLEANING OF EXISTING CATCH BASINS.

217-2.1 General.

The Contractor shall furnish all materials, equipment, tools and labor to clean out, i.e., remove trash and debris from within and around all catch basins in which retrofit devices will be installed under this Contract to the maintenance standards specified in this subsection. Clean out shall also include the catch basin connector pipe openings. The catch basin shall be clean at the time of the installation of the retrofit device. Any trash and debris that accumulates between the dates the catch basin is cleaned and the date the device will be installed shall be removed prior to installation of the device at the Contractor's expense.

217-2.2 Removal and Reinstallation of Catch Basin Manhole Covers.

The Contractor shall remove the existing manhole cover as required to access the inside of the catch basin and shall reinstall the existing catch basin manhole cover whenever the catch basin is left unattended.

The Contractor's attention is directed to the possibility that the catch basin cover screws may be frozen. It shall be the Contractor's responsibility to remove these frozen cover screws. If during their removal the catch basin covers or screws should become damaged, it shall be the Contractor's responsibility to replace them in accordance with the applicable standard plan and to redrill and tap new holes, if necessary, at no additional cost to the AGENCY. If heat is used to facilitate removal of frozen cover screws, the screws must be checked the following workday to verify that they have not refrozen.

Before leaving a catch basin, the Contractor shall thoroughly clean all debris from the manhole frame and cover. When replacing the catch basin covers, the Contractor shall grease all catch basin cover screws with a high temperature thread lubricant and seal grease (Jet-Lube by Koper-Kote or equal) and shall furnish and replace any missing screws.

217-2.3 Maintenance Conditions and Maintenance Standards.

Following are deficiencies in maintenance conditions and their corresponding maintenance standards which shall apply to this Contract. The clean out of each catch basin shall meet the maintenance standards listed as follows:

	Description of Maintenance Condition Deficiency		Description of Maintenance Standard
1.	Trash and debris located immediately in front of curb opening or side opening of catch basin, and on top or between metal grates of grated catch basin.	1.	No trash and debris located immediately in front of catch basin opening, and on top or between metal grates.
2.	Vegetation growing across and/or blocking the basin opening.	2.	No vegetation blocking catch basin opening.
3.	Trash and debris in the basin.	3.	No trash and debris within the catch basin.
4.	Trash and debris in the connector pipe opening upstream or downstream.	4.	No trash or debris in connector pipe opening and/or in the connector pipe for a distance of 6 feet inside from the opening.

Trash and debris shall include, but is not limited to, mud, vegetation, and garbage.

Upon completion of a clean out operation at a catch basin and before leaving it, the Contractor shall sweep and clean the top surface of the catch basin and the area 2 feet around the basin, and shall remove any trash and debris resulting from the clean out operations. No debris is to be left at a catch basin for future pickup.

217-2.4 Method of Removal.

All debris and trash required to be removed from the catch basins shall be removed in a manner to be determined by the Contractor. The Contractor shall not allow any trash or debris to enter the connector pipe or main line as a result of the clean out operations.

217-2.5 Debris Disposal.

All debris and trash removed under this Contract shall become the property of the Contractor and shall be legally disposed of away from the catch basin sites. The Contractor is responsible for proper disposal of the debris and trash, including obtaining approvals from all jurisdictional agencies, as applicable. The Contractor shall be responsible for removing any dead animal from inside a catch basin. The Contractor shall also be responsible for contacting and coordinating with the appropriate agency or organization in charge with the pickup and disposal of dead animals.

Prior to the start of the Work, the Contractor shall identify his intended disposal sites. In addition, the Contractor shall furnish to the Engineer at the end of each week the original or copies of all invoices or billings for the disposal of debris. The Contractor is responsible for reporting to the disposal facility, as accurately as practical, the jurisdictional percentage of the debris being disposed. These invoices must indicate the weights or volume of debris disposed.

Vehicles used by the Contractor to transport debris to approved dumpsites shall be so equipped that spillage does not occur. Covering of the load shall be required to prevent the debris from being blown off the transport vehicle. Vehicles and personnel operating these vehicles that do not comply with this requirement may be ordered removed from the project and shall not be utilized again.

217-4 AUTOMATIC RETRACTABLE SCREENS (ARS).

217-4.1 General.

An Automatic Retractable Screen (ARS) prevents trash and debris from entering the catch basin during dry weather and moderate storm flows, thereby maintaining trash and debris within the street to be collected by street sweeping and other equipment. It shall open automatically to restore the curb opening with minimal obstruction when the depth of the storm flow in the street exceeds 3 inches.

The mechanism for automatically opening the screen shall be any mechanism that collects storm water in a container and uses the weight of that water to operate moving parts that cause the screen to open. The following is the Automatic Retractable Catch Basin Screen model and manufacturer accepted by the Los Angeles County Department of Public Works for minimum reduction in Catch Basin Hydraulic Capacity and the Cities:

Model:	**Wing Gate**
Manufacturer:	United Storm Water, Inc. 1400 E. Valley Boulevard City of Industry, CA 91746-2801
Contact:	Terry Flury (626) 419-3521 terry@unitedstormwater.com

Bidders are advised that the listing of devices by name in these Special Provisions does not exclude the device from meeting all requirements of these Special Provisions. There shall be no exceptions to this requirement and acceptance of devices not listed in these Special Provisions shall be at the sole discretion of the Engineer.

217-4.2 Materials and Fabrication.

1. All components, appurtenances, and accessories of the catch basin openings screen cover shall be of S-304 stainless steel.

2. The catch basin opening screen cover frame shall be manufactured/fabricated from S-304 stainless steel, gauge 12. The structural members shall have a minimum thickness of 3/16 inches. Any mounting brackets that may be used to secure the opening screen cover that are not considered structural members, shall be gauge 10.

3. The catch basin opening screen cover shall be manufactured/fabricated from S-304 stainless steel, gauge 12. The opening screen cover shall have circular openings with a diameter of three quarters (3/4) inch and provide at a minimum fifty percent (50%) open area.

4. The catch basin opening screen cover shall have its outer edges finished as to prevent handling injuries and ensure trash does not become ensnared.

5. The catch basin opening screen cover hinges shall be designed as to prevent slippage/prying off from the street side.

6. The concrete anchor bolts shall be 3/8" wedge anchor, and assembly bolts, screws, nuts, and washers shall be fabricated entirely from S-304 stainless steel.

7. An integrated closing-locking mechanism shall be provided on the catch basin opening screen cover that does not solely rely on magnets and/or springs as its locking mechanism.

217-4.3 Installation and Removal.

The screen mounting brackets shall be welded to the existing catch basin faceplate assembly or bolted to the concrete walls and soffit of the catch basin. Any faceplate assembly damaged during installation shall be replaced. All parts of the unit shall be sized to fit through the 24-inch diameter manhole when the unit is disassembled.

217-4.4 Operation.

The screens shall open and close automatically with variations in water flow. All screens shall swing fully open under maximum flow conditions, remain open as long as the flow depth exceeds 50% of the curb height, and return to the mechanically locked and closed position as the flow of water recedes.

Any buckets or containers that collect water as part of the automatic mechanism shall be self-draining and be equipped with a means for preventing the bucket from collecting debris that will weigh the bucket down and prevent the screen from automatically closing after the flow of water recedes.

Each unit shall be equipped with a mechanism that maintains the screen fully open if the water rises in the catch basin and impedes the operation of the mechanism that operates the screen (i.e., causes the bucket to float, reduces impact forces, etc.).

217-4.5 Onsite Test.

Each unit shall be manually operated upon completion of the installation to ensure that the screen and all moving parts move freely and the screen locks securely in the closed position. Units that are determined by the Engineer to be malfunctioning shall be repaired or replaced at the sole expense of the Contractor.

The Engineer will randomly select 25 percent of the catch basins in each City in which ARS units were installed for testing using water supplied from a fire hydrant or water truck. The Contractor shall be responsible for providing the source of water, including obtaining a hyrdrant construction meter from the water agency if a hydrant is used. Sufficient water shall be provided to cause the ARS units to open with no other assistance as follows:

1. Sandbags shall be placed around the catch basin opening to allow the water to pond in front of the catch basin to a depth of 3 inches, measured from the flow line of the catch basin opening. The sandbags shall be located 5 feet upstream and downstream of the end of the local depression. Sandbags shall also be placed 7 feet from and parallel to the curb face.

2. An impermeable rigid membrane/barrier shall be placed covering the catch basin opening to allow the water to pond in front of the catch basin. The membrane/barrier shall be capable of sealing the catch basin opening without leakage so that the water ponds to the depth required.

3. Once the water reaches the depth described herein, the impermeable membrane shall be removed in one quick and continuous motion to allow the ponded water to instantaneously enter the catch basin and cause the ARS to open. A continuous flow of water shall be provided for at least two minutes after the initial opening of the ARS units in sufficient quantity to maintain the unit open. At the end of the two minutes, the flow of the water shall be stopped and the unit shall close and lock automatically prior to or immediately after the flow into the catch basin stops.

4. This process shall be successfully completed at least two consecutive times without adjustments and/or calibration between trials.

Any units that do not open, close, and lock closed automatically under the test conditions, described herein, shall be repaired or replaced at the sole expense of the Contractor and re-tested. This process shall be repeated until the failed unit passes the test at the sole expense of the Contractor. If more than five of the units tested do not open as described above and require re-testing, the Engineer will select at his/her sole discretion additional catch basins to be tested at no additional cost to the AGENCY. The final adjustments shall be made on other catch basins that have similar configuration as the test catch basin.

217-4.6 Payment.

The Contract Unit Price, categorized by range in width of the existing catch basin opening, for ARSs shall be considered full compensation for furnishing and installing all the units required to span the entire width of the existing catch basin opening including all labor, materials and equipment for the cleaning of catch basins, installation, submittals, costs associated with the 3-year warranty, onsite testing and calibration, and all other costs involved in the Work not specifically covered by other items of work.

The Contractor shall note that some of the catch basins shown on the contract documents do not receive ARS units. Only those marked and identified. But due to the limited funding the AGENCY has the option to delete a location(s) of a catch basin in the contract documents.

Full compensation for furnishing all labor, equipment, and materials for the testing of ARS units shall be considered as included in the Contract Unit Price for the applicable items in the bid. No additional payment will be made for compliance with these testing requirements.

217-5 FLO-GARD® + PLUS CATCH BASIN FILTER INSERTS.

The Flo-Gard® + Plus, manufactured by Kristar Enterprises Inc., or approved equal, shall be pre-approved by Los Angeles County Flood Control District. Contractor shall provide shop drawings as required for Los Angeles County Flood Control District.

Filter inserts shall have both an "initial" filtering bypass and "ultimate" flow bypass feature. The filter support frame shall be constructed from stainless steel Type 304. Allow a minimum of 2.0 feet of clearance between the bottom of the grate and top of outlet pipe(s), or refer to the FloGard® Insert for "shallow" installations. Filter medium shall be *Fossil Rock* ™, installed and maintained in accordance with manufacturer specifications. Storage capacity reflects 80% of maximum solids collection prior to impeding filter bypass. Filtered flow rate includes a safety factor of two.

Add the following section:

SECTION 218 – SIGNS.

218-1 INTERPRETIVE SIGNS.

The contractor shall furnish and install three (3) interpretive signs at the Entradero Basin and one (1) at the Henrietta Basin according to the plans. The interpretive signs shall be 2' x 4' and pre-approved by the CITY. The Contractor will contract with The Acorn Group to develop the contents of the signs. The Contractor shall include all costs including, but not limited to, the development of the content. The content, layout, and materials will be approved per the submittal required in section 2-5.3.4.

The Acorn Group
180 South Prospect Avenue, Suite 230
Tustin, CA 92780
Phone: (714) 838-4888
Fax: (714) 838-5309
www.acorngroup.com

218-2 NO PARKING SIGNS.

218-2.1 Sign Specifications.

The Contractor shall furnish and install "No Parking" signs with days and times to be provided by the Engineer and as follows:

- Size: signs shall be 12"x18"
- Text: Red with "TORRANCE" on the bottom border
- Materials: made of 0.080" aluminum with 3M, diamond grade cubed, with protective overlay film 1160
- Warranty: matched component system warranty of 12 years

218-2.2 Post Specifications.

The Contractor shall provide and mount signs to posts as follows;

- U-Channel Post Hot rolled flanged channel produced from high strength rail steel according to ASTM A499-81, Grade 60. Dimensions = 3-1/8" x 1.516"
- Length: 12 feet
- Weight: 2 pounds per linear foot
- Holes: 3/8" diameter on one-inch centers punched full length, beginning 1" from top of post
- Finish: Hot dipped galvanization per ASTMA-A-123

218-2.3 Bracket and Strap Set Specifications.

Signs mounted to existing street poles shall use brackets as follows:

- Buckles (2 per set): 3/4" stainless steel buckle, Band It Inc. part no. BU 256 or ISO equivalent
- Brackets (2 per set): Stainless Steel, 3/4" slot flared leg bracket, stainless steel bolt, stainless steel washer, and fiber washer, Band It Inc. part no. D02189 or ISO equivalent part no. SB021
- Straps (2 per set): Stainless Steel band, 3/4" wide and 0.025" thick, Band It Inc. part no. BU256 or ISO equivalent

218-2.4 Installation Specifications.

Installation should be in ground at depth necessary to hold the sign firmly in place with a minimum depth of 24". Sign placement will be guided by the locations identified in the plans. As much as possible, actual sign locations will be on the property line, if a new pole is being installed. Signs will be targeted to be placed between the curb and sidewalk with a targeted lateral offset of 0.6 m (2 ft) from the curb and a minimum lateral offset of 0.3m (1 ft) from the face of the curb. Bracket installation requires a screw mounting or other method to the bracket to ensure that the sign may be replaced on the existing bracket without removing the bracket. Sign placement will be 25' from the corner of the intersection.

218-2.5 Payment.

The Contract Unit price for installing "No Parking" signs shall include all costs for siting sign locations, materials and installation.

218-3 TEMPORARY INFORMATION SIGNS

Signage shall be posted in a prominent location at the Amie, Henrietta, and Entradero Basins and shall include the Santa Monica Bay Restoration Commission and State Water Board color logos and Bureau of Reclamation (available from the Grant Manager and Program Analyst):

and the following disclosure statement:

"Funding for this project has been provided in full or in part through an agreement with the State Water Resources Control Board and the Bureau of Reclamation."

PART 3 - CONSTRUCTION METHODS

SECTION 300 – EARTHWORK

300-1 CLEARING AND GRUBBING.

300-1.3 Removal and Disposal of Materials.

300-1.3.1 General. Replace the entire subsection with the following:

Unless otherwise stated on the Plans or Specifications, all material removed from the Work shall become the property of the Contractor and shall be disposed of in a lawful manner. Removals shall include, but not limited to trash, all excess excavation material, trees and plants, debris, interfering portions of curb, gutters, asphalt and PCC concrete pavements and sidewalks (including base, where applicable), and miscellaneous items as shown on the Plans. The Contractor shall conform to the following requirements:

1) The Contractor shall not start any removal work unless it is prepared to perform reconstruction work within 24 hours of the time removals were begun, unless otherwise approved by the Engineer.

2) The Contractor shall complete forming and pouring of PCC construction within five (5) working days following the removal of existing material at any location.

3) The Contractor shall not remove on-site improvements until it is prepared to construct the adjacent street section and shall promptly restore all such improvements as applicable, upon completion of the adjacent street work.

All concrete removed shall be hauled off the Work site no later than the calendar day following the day that the removal is performed.

In order to protect the public streets from deterioration due to hauling of materials, the Contractor shall submit, prior to the Pre-Construction Meeting, for approval a proposed route for hauling of materials for disposal. Upon approval, the Contractor shall strictly adhere to that route, unless written permission from the Engineer is obtained to change the route.

300-1.3.2 Requirements.

Add subparagraphs (d):

(d) **Miscellaneous Removals and Relocations.** This work shall include all removals not specifically listed in the Proposal or otherwise covered by these Specifications, and all necessary relocations and restorations of walls, fences, plants, hardscape, signs and other items, whether shown on the Plans or not, and as necessary to complete the improvements.

Add the following section:

300-1.3.3 Construction and Demolition Debris Recycling.

General. Consistent with the Agency's efforts to comply with the California Integrated Waste Management Act of 1989 (AB 939), the Contractor shall reduce, reuse, and/or recycle to the maximum extent feasible, the construction and demolition debris (debris) generated by this Contract hereby diverting the debris from disposal facilities, saving landfill space, and conserving virgin materials and natural resources.

Definitions.

"Construction and Demolition Debris or Debris" means materials resulting from building, construction or demolition-related activities such as excavation, grading, land clearing, renovation, repair, road work and site cleanup and are considered solid waste pursuant to Section 40191 of the California Public Resources Code. The materials include, but are not limited to, asphalt, brick, cardboard, carpet, cinder block, concrete, concrete with reinforcement bars, drywall, excavated materials, fixtures and fittings, glass, gravel, green waste, metal, mixed rubble, packaging materials, paper, plastics, porcelain, road work materials, roofing materials, rock, sand, site clearance materials, soil, trees, tree stumps and other vegetative matter, stones and wood waste.

"Deconstruction" means the process of carefully dismantling a structure, piece by piece prior to or instead of conventional demolition, to maximize the recovery of building materials for reuse and/or recycling.

"Delivery Site" means recycling facility as defined in Subsection E.14 and recycling or reuse site as defined in Subsection E.15 or any place, including a transfer station as defined in Subsection E.20 where the debris is delivered for the sole purpose of reuse and/or recycling in a manner acceptable to the Director/Designee.

"Disposal" means the process of disposing of debris at a Disposal Facility.

"Disposal Facility" means a Landfill or any location where the debris is taken for Transformation as defined.

"Generation" means the quantity of debris produced by the Work before the debris is reused and/or recycled.

"Green Waste" means all vegetative cuttings, shrubs, stumps, logs, brush, tree trimmings, grass, and related materials which have been separated from other solid waste.

"Landfill" means a solid waste disposal facility that accepts solid waste for land disposal and is operating under a current Solid Waste Facility Permit issued by a local enforcement agency as defined in Section 40130 of the California Public Resources Code and concurred upon by the California Integrated Waste Management Board.

"Recyclable" means material that still has useful physical or chemical properties after serving its original purpose and that can be reused or re-manufactured into additional products.

"Recycle or Recycling" means the process of collecting, sorting, cleansing, treating, and reconstituting materials that would otherwise become solid waste and returning them to the economic mainstream in the form of raw materials for new, reused, or reconstituted products which meet the quality standards necessary to be used in the marketplace, and in a manner acceptable to the Agency. "Recycle" or "Recycling" does not include Transformation.

"Recycling Facility" means any facility (except a transformation facility) whose principal function is to receive, store, convert, separate, or transfer recyclable materials for processing.

"Recycling or Reuse Site" means any place other than a recycling facility acceptable to the Agency for recycling and/or reuse of debris.

"Reduce" means any action which causes a net reduction in the generation and/or disposal of solid waste.

"Reuse" means the use, in the form as it was produced, and in a manner acceptable to the Agency of materials which might otherwise be discarded into a Disposal Facility.

"Site Clearance Material" means materials such as trees, brush, earth, mixed concrete, rubble, sand, steel, extraneous paper, plastics, and other waste materials generated from site clearance.

"Source Separation" means the segregation, by the generator, of materials designated for separate collection for materials recovery or special handling.

"Transfer Station" means a facility utilized to receive solid wastes and to temporarily store, separate, convert, or otherwise process the materials in the solid wastes, and/or to transfer the solid wastes directly from smaller to larger vehicles or railroad trains for transport.

"Transformation" means incineration, pyrolysis, distillation, gasification, or biological conversion other than composting.

"Wood Waste" means solid waste consisting of wood pieces or particles which are generated from the manufacturing or production of wood products, harvesting, processing or storage of raw wood materials, or construction or demolition activities.

RECYCLING SUMMARY.

The Contractor shall prepare and submit a Recycling Summary report using the form included as Appendix IV summarizing the disposal, reuse, and/or recycling activities which occurred throughout the Contract duration. This report shall be submitted by the Contractor to the Agency, before or with its request for the final Progress Payment for said Contract.

Failure of the Contractor to submit the Recycling Summary within the time specified will result in damages being sustained by the Agency. Such damages are, and will continue to be, impracticable and extremely difficult to determine. For failure to submit the Recycling Summary, as required, the Contractor shall pay to the Agency, or have withheld from monies due it, the sum of $10,000 for a contract of $500,000 or more. The Contractor shall pay to the Agency, or have withheld from monies due it, 2% of the total contract amount for a contract of $499,999 or less.

Execution of the Contract shall constitute agreement by the Agency and Contractor that $10,000 (2% for contracts $499,999 or less) is the minimum value of the costs and actual damage caused by the failure of the Contractor to submit the Recycling Summary within the time specified. Such sum is liquidated damages and shall not be construed as a penalty, and may be deducted from payments due the Contractor.

PAYMENT.

The cost of construction and demolition debris recycling and completing the Recycling Summary report shall be considered as included in the Contract Unit Price for the various Bid items. The quantities reported will be used for information gathering purposes and not for purposes of payment to the Contractor.

300-2 UNCLASSIFIED EXCAVATION.

300-2.2 Unsuitable Material.

300-2.2.1 General. Replace the first paragraph with the following:

If unsuitable material is found, the Contractor shall remove said material to the limits to be determined by the Engineer and shall replace said material with select fill or base material, as to be determined by the Engineer. Payment for removal and replacement shall be made as Extra Work or Force Account Work.

Payment for unsuitable material excavation and backfill shall be measured and paid for as Unclassified Excavation.

300-5 BORROW EXCAVATION

300-5.1 Local Borrow. Add the following:

Excavated fill from the Henrietta and Entradero Basins may be used as local borrow material at the Amie Basin.

300-7 EARTHWORK FOR CHANNELS

300-7.5 Grading. Add the following:

The earthen channel at the Entradero Basin shall be lined with a tied concrete block mat, Flex-A-Mat, or an approved equal.

300-7.5.1 General.

Scope of Work

The Contractor shall furnish all labor, materials, equipment, and incidentals required and perform all operations in connection with the installation of tied concrete block erosion control mats in accordance with the lines, grades, design and dimensions shown on the Contract Drawings and as specified herein.

Submittal

The Contractor shall submit to the Engineer all manufacturer's performance research results and calculations in support of the tied concrete block mat system. Calculations and shop drawings shall be provided by the manufacturer for the means and methods necessary to place the mats in accordance with Section 300-7.5.2 General and in accordance with the plans. The shop drawings shall indicate the size and location of mats and placement along with providing the details and how the mats are tied together and are to be moved.

The Contractor shall furnish to the Engineer all manufacturers' specifications, literature, shop drawings for the installation of the mats, and any recommendations, if applicable, that are specifically related to this project.

300-7.5.2 Products.

General

Tied concrete block mats shall be manufactured or field fabricated from individual concrete blocks tied together with a high strength geogrid. Each block shall be tapered, beveled and interlocked. Each block shall incorporate interlocking surfaces or connections that prevent lateral displacement of the blocks within the mats when they are lifted for placement.

Tied Concrete Block Mat

1. Scope
This specification covers concrete blocks for erosion control mats used for stabilizing channels.

2. Materials
Cementitious Materials - Materials shall conform to the following applicable ASTM specifications:

Portland Cements - Specification C 150, for Portland Cement.
Blended Cements - Specification C 595, for Blended Hydraulic Cements.
Hydrated Lime Types - Specification C 207, for Hydrated Lime Types.
Pozzolans - Specification C 618, for Fly Ash and Raw or Calcined Natural Pozzolans for use in Portland Cement Concrete.

Aggregates shall conform to the following ASTM specifications, except that grading requirements shall not necessarily apply:

Normal Weight - Specification C 33, for Concrete Aggregates.

3. Physical Requirements

Physical Requirements			
Compressive Strength Net Area Minimum psi (mPa)		Water Absorption Maximum, lb/ft^3 (kg/m^3)	
Average of 3 units	Individual Unit	Average of 3 units	Individual Unit
4,000 (27.6)	3,500 (24.0)	10 (160)	12 (192)

Durability. The manufacturer shall satisfy the purchaser by proven field performance that the concrete units have adequate durability even if they are to be subjected to a freeze-thaw environment.

4. Visual Inspection
All units shall be sound and free of defects that would interfere with the proper placing of the unit or impair the strength or permanence of the construction. Surface cracks incidental to the usual methods of manufacture, or surface chipping resulting from customary methods of handling in shipment and delivery, shall not be deemed grounds for rejection.

5. Sampling and Testing
The purchaser or his authorized representative shall inspect the units upon delivery. Units missing more than 4 blocks per 80 square feet section shall be deemed grounds for rejection.

6. Manufacturer
Cellular concrete block systems shall the following or equivalent:

Manufacturer: Motz Enterprise
Product Name: Flex-A-Mat
11006 Reading Road
Cincinnati, OH 45241
Phone: (513)772-MOTZ (6689)

The tied concrete block mats shall have one or more of the following nominal characteristics:

Minimum open area of 10%

The tied concrete block mat shall exhibit resistance to mild concentrations of acids, alkalis, and solvents.

Polypropylene Geogrid
Revetment mat shall be constructed of high tenacity, low elongating, and continuous filament polypropylene fibers. Interlocking geogrid shall have the following physical characteristics:

Mass/Unit Area ASTM D-5261 7.0 oz/yd2 240 g/m2
Aperture Size Measured 1.6 x 1.6 inch 40 x 40 mm
Wide Width Tensile Strength
Machine Direction (MD) ASTM D-6637 2,055 lb/ft 30 kN/m
Cross Machine Direction (CMD) ASTM D-6637 2,055 lb/ft 30 kN/m
Elongation at Break ASTM D-6637 6 % 6 %
Tensile Strength @ 2%
Machine Direction (MD) ASTM D-6637 822 lb/ft 12 kN/m
Cross Machine Direction (CMD) ASTM D-6637 822 lb/ft 12 kN/m

Tensile Strength @ 5%
Machine Direction (MD) ASTM D-6637 1,640 lb/ft 24 kN/m
Cross Machine Direction (CMD) ASTM D-6637 1,640 lb/ft 24 kN/m
Tensile Modulus @ 2%
Machine Direction (MD) ASTM D-6637 41,100 lb/ft 600 kN/m
Cross Machine Direction (CMD) ASTM D-6637 41,100 lb/ft 600 kN/m
Tensile Modulus @ 5%
Machine Direction (MD) ASTM D-6637 32,900 lb/ft 480 kN/m
Cross Machine Direction (CMD) ASTM D-6637 32,900 lb/ft 480 kN/m

NOTE: Polypropylene geogrid shall be determined by the manufacturer.

Tied concrete block mats are packaged in rolls. These are packaged with high strength lifting straps for moving material into place with an excavator.

300-7.5.3 Construction.

Prior to placing the tied concrete block mats, prepare the sub grade as detailed on the plans. All subgrade surfaces prepared for placement of mats shall be smooth and free of all rocks, stones, sticks, roots, other protrusions, or debris of any kind.

The prepared surface shall provide a firm unyielding foundation for the mats with no sharp or abrupt changes or breaks in the grade.

Apply seed directly to the prepared soil prior to installation of the Tied Concrete Block Mat. Use seed per project specifications. Install mats to the line and grade shown on the plans and according to the manufacturer's installation guidelines. The manufacturer will provide technical assistance during the slope preparation and installation of the tied concrete block mats as needed.

300-7.5.4 Measurement and Payment.

The completed work as described shall be measured and paid for at the contract unit price for the following contract item:

Earthen Channel – vegetated Flex-A-Mat

Payment for Tied Concrete Block Mat shall include all labor, equipment and materials to complete the work as described.

SECTION 301 – TREATED SOIL, SUBGRADE PREPARATION, AND PLACEMENT OF BASE MATERIALS

301-2 UNTREATED BASE.

301-2.1 General. Add the following:

Base is required under all PCC and AC improvements as shown on the Plans. Additional base may be required after review of work areas following removals. Prior to constructing new improvements, the Contractor shall verify with the Engineer that the base sections as shown on the Plans (including areas where no base is called for) are adequate. Payment for any changes shall be made pursuant to Section 3.

A minimum of 4-inches Crushed Miscellaneous Base (CMB) shall be placed under sidewalks, access ramps and stained median concrete (noses and mow strip). The Contractor shall be responsible for providing a "sifter machine" at the Bishop Basin so that the CITY staff can sift stock piles of crushed asphalt and provide all CMB in conformance to Section 200-2.4. The Contractor shall also be responsible for hauling

the CMB from the Bishop Basin to the site location. The Bishop Basin is located south of Torrance Boulevard and Henrietta Boulevard.

301-2.4. Measurement and Payment. Delete the second paragraph and add the following:

Payment for construction of CMB under AC pavement shall be per the Contract Unit Price per ton.

Payment for construction of CMB under curb, curb and gutter, driveways, local depressions, sidewalks, stained median concrete paving and access ramps shall be considered as included in the unit price bid for the item of work and no additional compensation will be allowed therefore.

SECTION 302 – ROADWAY SURFACING

Amend the following sections.

302-14 CONCRETE GRID PAVEMENTS.

302-14.1 General.

302-14.1.1 Related Documents.

A. Division 01 Specification Sections, Drawings, General Conditions, Supplementary General Conditions, and Special Conditions apply to this section.

302-14.1.2 Summary.

A. Section includes:
   1. Concrete grid units.
   2. Bedding sand.
   3. Edge restraints.
   4. Geotextiles.

302-14.1.3 References.

A. American Society of Testing Materials (ASTM)
   1. C 33, Specification for Concrete Aggregates.
   2. C 136, Method for Sieve Analysis for Fine and Coarse Aggregate.
   3. C 140, Standard Test Methods of Sampling and Testing Concrete Masonry Units.
   4. C 979, Standard Specification for Pigments for Integrally Colored Concrete.
   5. C 1319, Standard Specification for Concrete Grid Paving Units.
   6. ASTM D 698, Standard Test Method for Laboratory Compaction Characteristics of Soil Using Standard Effort (12,000 ft-lbf/ft3 (600 kN-m/m3)).
   7. D 2940, Standard Specification for Graded Aggregate Material for Bases or Subbases for Highways or Airports.
   8. D 5268, Specification for Topsoil Used for Landscaping Purposes.

B. Interlocking Concrete Pavement Institute (ICPI)
   1. Tech Spec technical bulletins.

302-14.1.4 Submittals.

A. In accordance with Conditions of the Contract and Division 1 Submittal Procedures Section.
B. Manufacturer's drawings and details: Indicate perimeter conditions, relationship to adjoining materials and assemblies, expansion and control joints, paving slab layout, patterns, color, and installation details.
C. Sieve analysis per ASTM C 136 for grading of bedding and base materials.

D. Concrete grid units:
   1. Color selected by the Engineer.
   2. Four representative full-size samples of each grid type, thickness, color, finish that indicate the extremes of color variation and texture expected in the finished installation.
   3. Accepted samples become the standard of acceptance for the work.
   4. Test results from an independent testing laboratory for compliance of grid paving unit requirements to ASTM C 1319.
   5. Manufacturer's certification of concrete grid units by ICPI as having met applicable ASTM standards.
   6. Manufacturer's catalog literature, installation instructions, and material safety data sheets for the safe handling of the specified materials and products.

302-14.1.5 Quality Assurance.

A. Paving Subcontractor Qualifications:
   1. Engage an experienced installer who has successfully completed grid pavement installations similar in design, material, and extent indicated for this Project.
   2. Hold a current certificate from the Interlocking Concrete Pavement Institute Concrete Paver Installer Certification program.
B. Single-source Responsibility: Obtain each color, type, and variety of grids, joint materials and setting materials from single sources with resources to provide products and materials of consistent quality, appearance and physical properties without delaying progress of the Work.
C. Regulatory requirements and approvals: applicable licensing, bonding or other requirements of regulatory agencies.
D. Mock-up
   1. Locate where directed by the Engineer.
   2. Notify Engineer in advance of dates when mock-ups will be erected.
   3. Install minimum 100 sf (10 m2) of concrete grid units.
   4. Use this area to determine the quality of workmanship in to be produced in the final unit of Work including surcharge of the bedding sand layer, joint sizes, lines, pavement laying pattern(s), color(s), and texture.
   5. This area shall be used as the standard by which the work is judged.
   6. Subject to acceptance by the owner, mock up may be retained as part of the finished work.
   7. If mock up is not retained, remove and properly dispose of.

302-14-1.6 Delivery, Storage, and Handling.

A. General: Comply with Division 1 Product Requirement Section.
B. Deliver concrete grid units to the site in steel banded, plastic banded, or plastic wrapped packaging capable of transfer by forklift or clamp lift. Unload grids at job site in such a manner that no damage occurs to the product or existing construction.
C. Cover sand with waterproof covering to prevent exposure to rainfall or removal by wind. Secure the covering in place.
D. Coordinate delivery and paving schedule to minimize interference with normal use of buildings adjacent to paving.

302-14.1.7 Environmental Conditions.

A. Do not install bedding materials or grid units during heavy rain or snowfall.
B. Do not install bedding materials and grid units over frozen base materials.
C. Do not install frozen bedding materials.

302-14.1.8 Grid Maintenance Materials.

A. Supply 50 sf (5 m2) of each type and color of grid unit in unopened pallets with contents labeled. Store where directed.
B. From the same production run as installed materials.

302-14.2 Products.

302-14.2.1 Concrete Grid Units.

A. Manufacturer: Angelus Paving Stones or approved equal.
   1. Contact: Rialto Paver Plant at (951) 328-9115
B. Concrete grid units, including the following:
   2. Grid unit type: Holland
      a. Material standard: Comply with material standards set forth in ASTM C 1319.
      b. Color : Stone
      c. Color Pigment Material Standard: Comply with ASTM C 979.
      d. Size: 6 inches x 6 inches x 2 3/8 inches thick.
C. Manufactured in a plant which has passed ASTM requirements in this specification.

302-14.2.2 Product Substitutions.

A. Substitutions: Per Architectural Choice for color and size.

302-14.2.3 Bedding Materials.

A. General – Sieved per ASTM C 136.
B. Bedding Sand
   1. Washed, clean, hard, durable crushed gravel or stone, free from shale, clay, friable materials, organic matter, frozen lumps, and other deleterious substances.
   2. Conforming to the grading requirements in Table 1 below.
   3. Do not use limestone screenings.

Table 1
ASTM C 33 Gradation for Bedding Sand

Sieve Size	Percent Passing
3/8 in. (9.5 mm)	100
No. 4 (4.75 mm)	95 to 100
No. 8 (2.36 mm)	85 to 100
No. 16 (1.18 mm)	50 to 85
No. 30 (0.600 mm)	25 to 60
No. 50 (0.300 mm)	10 to 30
No. 100 (0.150 mm)	2 to 10
No. 200 (0.075 mm)	0 to 1

302-14.2.4 Fill Materials for Grid Openings.

A. Topsoil: Conform to ASTM D 5268.

302-14.2.5 Edge Restraints.

A. Provide edge restraints installed around the perimeter of all concrete grid paving unit areas as specified by manufacturer.

302-14.2.6 Accessories.

A. Provide accessory materials per manufacturers specifications.
B. Geotextile fabric as needed and acceptable to manufacturer.

302-14.3 Execution.

302-14.3.1 Acceptable Installers.

A. ICPI Certified Installer

302-14.3.2 Examination.

A. Acceptance of site verification conditions:
    1. Contractor shall inspect, accept and verify in writing to the grid installation subcontractor that site conditions meet specifications for the following items prior to installation of bedding materials and concrete grid units:
        a. Verify that drainage and subgrade preparation, compacted density and elevations conform to specified requirements.
        b. Verify that geotextiles, if applicable, have been placed according to drawing and specifications.
        c. Verify that base materials, thickness, compacted density, surface tolerances and elevations conform to specified requirements.
        d. Provide written density test results for the soil subgrade, base materials to the Owner, Contractor, and grid installation subcontractor.
    2. Do not proceed with installation of bedding materials and concrete grids until base conditions are corrected by the Contractor or designated subcontractor.

302-14.3.3 Preparation.

A. Verify that base is dry, certified by Contractor as meeting material, installation and grade specifications (and geotextileb if applicable) are ready to support sand, edge restraints if applicable, grids and imposed loads.
B. Edge Restraint Preparation if applicable:
    1. Install edge restraints per the manufacturer's recommendations.
    2. Mount directly to finished base. Do not install on bedding sand.
    3. The minimum distance from the outside edge of the base to the spikes shall be equal to the thickness of the base.

302-14.3.4 Installation.

A. Spread the sand evenly over the compacted, dense-graded base course and screed uniformly to 1/2 to 1 in. (13 to 25 mm). Place sufficient sand to stay ahead of the laid grids.
B. Ensure the grid units are free from foreign materials before installation.
C. Lay the grid units on the bedding sand in the pattern(s) shown on the drawings. Maintain straight joint lines.
D. Joints between the grids shall not exceed 3/16 in. (5 mm).
E. Fill gaps at the edges of the paved area with cut grids or edge units.
F. Cut grids to be placed along the edge with a double-bladed splitter or masonry saw.
G. Sweep the grid surface clear prior to compacting.
H. Compact and seat the grids into the screened bedding sand using a low-amplitude, 75-90 Hz plate compactor capable of at least 4,000 lbs. (18 kN) centrifugal compaction force. Use rollers or a rubber or neoprene pad between the compactor and grids to prevent cracking or chipping. Do not compact within 6 ft (2 m) of the unrestrained edges of the grid units.
I. All work to within 6 ft (2 m) of the laying face must be left fully compacted at the completion of each day.

J. Remove excess sand on surface when the job is complete.

302-14.3.5 Field Quality Control.

A. After removal of excess top soil/aggregate, check final elevations for conformance to the drawings. Allow 1/8 to 1/4 in. (3 to 6 mm) above specified surface elevations to compensate for minor settlement.
B. The final surface tolerance from grade elevations shall not deviate more than ±3/8 in. (10 mm) over a 10 ft (3 m) straightedge.
C. The surface elevation of grid units shall be 1/8 to 1/4 in. (3 to 6 mm) above adjacent drainage inlets, concrete collars or channels.
D. Lippage: No greater than 1/8 in. (3 mm) difference in height between adjacent grid units.

302-14.3.6 Protection.

A. After work in the section is complete, the Contractor shall be responsible for protecting work from damage due to subsequent construction activity on the site.

SECTION 303 – CONCRETE AND MASONRY CONSTRUCTION

303-1 CONCRETE STRUCTURES.

303-1.1 General. Add the following at the end of the first paragraph.

All concrete stairs are to be stained a shade of brown that most closely resembles the surrounding natural earth.

303-2 AIR-PLACED CONCRETE.

303-2.9 Finishing. Add the following to the end of the section.

All Shotcrete used for the weirs shall be a shade of brown that most closely resembles the surrounding natural earth.

303-4 MASONRY CONSTRUCTION

Add the following subsections:

303-4.3 Construction of the Keystone Wall.

303-4.3.1 Excavation.

A. Contractor shall excavate to the lines and grades shown on the construction drawings. City Inspector shall inspect the excavation and approve prior to placement of leveling material or fill soils. Proof roll foundation area as directed to determine if remedial work is required.
B. Over-excavation and replacement of unsuitable foundation soils and replacement with approved compacted fill will be compensated as agreed upon with the City Inspector.

303-4.3.2 Base Leveling Pad.

A. Leveling pad material shall be placed to the lines and grades shown on the construction drawings, to a minimum thickness of 6 inches (150 mm) and extend laterally a minimum of 6" (150 mm) in front and behind the modular wall unit.
B. Excavation for Structures and Slabs on Grade.

1. Grade top perimeter of excavations to prevent surface water from draining into excavation. Provide dewatering of excavations as required to ensure suitable conditions for concrete and backfilling operations.
2. Soil leveling pad materials shall be compacted to a minimum of 95 % Standard Proctor density per ASTM D-698
3. Leveling pad shall be prepared to insure full contact to the base surface of the concrete units.
4. Protect excavations from cave-in and from loose soil and other matter from falling in.

303-4.3.2 Modular Unit Installation.

A. First course of units shall be placed on the leveling pad at the appropriate line and grade. Alignment and level shall be checked in all directions and insure that all units are in full contact with the base and properly seated.
B. Place the front of units side-by-side. Do not leave gaps between adjacent units. Layout of corners and curves shall be in accordance with manufacturer's recommendations.
C. Install shear/connecting devices per manufacturer's recommendations.
D. Place and compact drainage fill within and behind wall units. Place and compact backfill soil behind drainage fill. Follow wall erection and drainage fill closely with structure backfill.
E. Maximum stacked vertical height of wall units, prior to unit drainage fill and backfill placement and compaction, shall not exceed two courses.

303-4.3.3 Reinforced Backfill Placement.

A. Reinforced backfill shall be placed, spread, and compacted in such a manner that minimizes the installation damage.
B. Reinforced backfill shall be placed and compacted in lifts not to exceed 6 inches (150 mm) where hand compaction is used, or 8 - 10 inches (200 to 250 mm) where heavy compaction equipment is used. Lift thickness shall be decreased to achieve the required density as required.
C. Reinforced backfill shall be compacted to 95% of the maximum density as determined by ASTM 0698. The moisture content of the backfill material prior to and during compaction shall be uniformly distributed throughout each layer and shall be dry of optimum, + 0%, - 3%.
D. Only lightweight hand-operated equipment shall be allowed within 3 feet (1m) from the tail of the modular concrete unit.
E. Tracked construction equipment shall not be operated directly upon the geogrid reinforcement. A minimum fill thickness of 6 inches (150 mm) is required prior to operation of tracked vehicles over the geogrid. Tracked vehicle turning should be kept to a minimum to prevent tracks from displacing the fill.
F. At the end of each day's operation, the Contractor shall slope the last lift of reinforced backfill away from the wall units to direct runoff away from wall face. The Contractor shall not allow surface runoff from adjacent areas to enter the wall construction site.

303-4.3.4 Cap Installation.

Cap units shall be glued to underlying units with an all-weather adhesive recommended by the manufacturer.

303-4.3.5 Tolerances.

A. Vertical alignment: ± 1.5" (40 mm) over any 1 0' (3 m) distance.
B. Wall Batter: within 2 degrees of design batter.
C. Horizontal alignment: ± 1.5" (40 mm) over any 1 0' (3 m) distance. Corners, bends & curves:± 1 ft (300 mm) to theoretical location.
D. Maximum horizontal gap between erected units shall be~ 1/2 inch (13 mm).

303-4.3.6 Field Quality Control.

A. Quality Assurance - The City of Torrance, Public Works Department shall/may engage inspection and testing services, including independent laboratories, to provide quality assurance and testing services during construction. This does not relieve the Contractor from securing the necessary construction control testing.
B. Quality assurance should include foundation soil inspection. Verification of geotechnical design parameters, and verification that the contractor's quality control testing is adequate as a minimum. Quality assurance shall also include observation of construction for general compliance with design drawings and project specifications. Quality assurance is best performed by the site geotechnical engineer.
C. Quality control testing shall include soil and backfill testing to verify soil types and compaction and verification that the retaining wall is being constructed in accordance with the design plans and project specifications.

303-5 CONCRETE CURBS, WALKS, GUTTERS, CROSS GUTTERS, ALLEY INTERSECTIONS, ACCESS RAMPS, AND DRIVEWAYS.

303-5.1 Requirements.

303-5.1.1 General. Replace the first sentence of the second paragraph with the following:

Unless otherwise specified on the Plans, and except as otherwise prescribed in 303-5.1.3 under the heading "Driveway Entrances," the minimum thickness of walks shall be 3-1/2 inches.

303-5.7 Repairs and Replacements. Add the following:

The Contractor shall be responsible to protect all new concrete work from being etched, scratched or otherwise marked following replacement thereof. If new concrete work is marked, the Contractor shall replace it at its expense and no extra costs will be allowed.

SECTION 306 – UNDERGROUND CONDUIT CONSTRUCTION

306-1 OPEN TRENCH OPERATIONS

306-1.1 Trench Excavation

306-1.1.1 General. Add the following:

All trenches shall be sawcut to the bottom of the existing concrete or asphalt section to minimize damage to adjacent pavement. The bottom of the trench shall be excavated uniformly to the grade of the bottom of the pipe and shall be given a final trim using a string line for establishing grade, such that each pipe section when first laid will be continually in contact with the ground along the extreme bottom of the pipe.

306-1.1.3 Maximum and Minimum Width of Trench. Add the following**:**

For sewers, potable and reclaimed water pipelines and storm drains, the bottom of the trench shall have a minimum width equal to the outside diameter of the pipe plus 12 inches and a maximum width equal to the outside diameter of the pipe plus 16 inches, unless otherwise shown on the Plans.

Add the following subsections:

306-1.1.7 Trench Over-Excavation.

Trenches shall be over-excavated beyond the depth shown when ordered by the Engineer. Such over-excavation shall be to the depth ordered. The trench shall be refilled to the grade of the bottom of the pipe with either selected granular material obtained from the excavation, sand or crushed rock, at the option of the Engineer. When crushed rock is ordered, the material shall be a well-graded material of 1-1/2 inch maximum size. Bedding material shall be placed in layers brought to optimum moisture content, and compacted to 95 percent of maximum density where the pipeline trench passes under structures and 90 percent elsewhere. All work specified in this subsection shall be performed by the Contractor and paid in accordance with 3-3 of these Special Provisions.

Any over-excavation carried below the specified grade and not ordered by the Engineer, specified or shown on the Plans, shall be refilled to the required grade with suitable selected granular material. Such material shall be moistened as required and compacted to 95 percent of maximum density under structures and 90 percent elsewhere. Such work shall be performed by the Contractor at its own expense.

306-1.1.8 Construction Dewatering and By-Pass.

The Contractor's attention is directed to the presence of shallow groundwater on this Project (see soil borings).

The Contractor shall prepare and implement a dewatering system to pump, contain, transport, and dispose of all groundwater generated from the excavation for the Project. All Contractor operations shall be in full compliance with applicable Federal, State, and Local laws and regulations that govern water quality. The Contractor shall at all times properly operate and maintain all components of the dewatering and containment systems. The equipment shall be cleaned of silt/sediment as directed by the Engineer and all leaks shall be immediately repaired.

If during the progress of the Work, the Engineer determines that the dewatering system is inadequate or does not fully comply with these Special Provisions, the Contractor shall, at his expense, furnish any equipment, labor, materials, and outside services necessary to perform the Work to the satisfaction of the Engineer.

Besides groundwater, the Amie Basin also receives flow from urban runoff and groundwater wells. The flow from the well enters the basin at the north east drain and the urban runoff enters the basin at the south side drain. These flows can be dewatered along with the groundwater or the contractor can coordinate a by-pass with the CITY. The by-pass is to route intermittent well discharges around the job site.

WRD Well Flow Rate		
Time (minutes)	**Flow Rate (gpm)**	**Comments**
7.5	1,560	Start-up
4.5	1,560	Shut-down
The minimum pumping times are provided in this table.		

306-1.1.8.1 Dewatering and By-Pass Plan.

The Contractor shall submit to the CITY for review a dewatering and by-pass plan per Subsection 2-5.3. Review by the CITY shall not relieve the Contractor of the responsibility for the adequacy of the design, installation, and maintenance of the dewatering and by-pass system or full compliance with these provisions and all other applicable Federal, State, and Local laws and regulations.

The Amie Basin Pump Station shall be protected in place. The Contractor may provide temporary connection to the Amie Basin Pump Station 10" force main in Amie Avenue, providing that valving is installed to allow normal operation of Amie Pump Station during a rain event.

The dewatering and by-pass plans shall include details of the methods and procedures for the pumping, containment, management, transportation, and of disposal of all groundwater and urban runoff generated on the Project. The plan shall include, as a minimum, the following sections:

- A diagrammatic representation of the dewatering system showing the location of all equipment within the Project limits (including piping details, power source, etc.). The dewatering plan shall also include equipment specifications and all other information, for the complete understanding and operation of the dewatering system
- The disposal facility for the groundwater generated from this Project, including copies of all applicable current permits and waste acceptance policy for the disposal facility, and a copy of a samples completed non-hazardous waste manifest for the transportation of the water to the disposal facility.
- The Contractor shall complete all required forms/documentation to profile the groundwater generated. All profile forms shall be approved or signed by the CITY.
- The aboveground components of the dewatering system shall be secured with a perimeter fence to prevent unauthorized access.
- Plan to include piping to divert runoff from storm drains.

306-1.1.8.2 Reporting for Dewatering Activities.

At the completion of dewatering activities, the Contractor shall prepare and submit to the Engineer a tabular report summarizing all dewatering activities, including date of transportation, volume of water transported, copies of any required laboratory analytical data sheets (including QA/QC sheets, COCs, etc.), and all other applicable information requested by the Engineer within five (5) working days from the completion of dewatering activities or the CITY will hold payment for this bid item, until the report is completed per CITY satisfaction.

306-1.1.8.3 Payment.

The Allowance in the Bid for PREPARATION AND IMPLEMENTATION OF DEWATERING PLAN shall be reserved as compensation for furnishing all labor, equipment, materials, and temporary power for performing all work necessary for the preparation of the dewatering plan, construction, restoration and all other incidental costs not specifically listed as separate items of work in the Schedules of Prices.

Amend the following subsections:

306-1.2 INSTALLATION OF PIPE.

306-1.2.1 Bedding.

306-1.2.1.1 General. Replace the second sentence of the third paragraph with the following:

There shall be 4 inches minimum of bedding below the pipe barrel of storm drain pipes and 6 inches minimum of bedding below the pipe barrel of water pipes.

Add the following to the fifth paragraph:

Bedding material for ductile iron water lines shall be sand conforming to the requirements of 200-1.5.3 (minimum SE of 70) and 200-1.5.5 and shall be compacted to 95 percent of maximum density where the trench is located under structures, and 90 percent of maximum density elsewhere.

Bedding material for reclaimed water pipelines shall have a minimum SE of 30. Bedding shall be imported sand with 100 percent passing a 3/8-inch sieve and not more than 20 percent passing a 200-mesh sieve. Jetted bedding and backfill material shall be an option per Greenbook specification 306-1.3.3.

Bedding for sewer pipes shall conform to City of Torrance Standard Plan T204-2. Bedding for storm

drain pipes shall conform to City of Torrance Standard Plan No. T302-1. No CAB shall be used for plastic pipes.

306-1.2.2 Pipe Laying. Add the following:

Installation of ductile iron water mains and appurtenances shall conform to the requirements of AWWA C600. Installation of PVC pipes shall conform to the requirements of AWWA C900 and C905. The Contractor shall install pipe closure sections, fittings, valves and appurtenances shown, including pipe supports, bolts, nuts, gaskets and joining materials necessary for a complete installation.

At all times when the work of installing water mains, reclaimed water pipelines, sewers or storm drains is not in progress, all openings into the pipe and the ends of the pipe in the trenches or structure shall be kept tightly closed to prevent entrance of animals and foreign materials. The Contractor shall take all necessary precautions to prevent the pipe from floating due to water entering the trench from any source, shall assume full responsibility for any damage due to this cause and shall, at no cost to the CITY, restore and replace the pipe to its specified condition and grade if it is displaced due to floating. The Contractor shall maintain the inside of the pipe free from foreign materials and in a clean and sanitary condition until its acceptance by the Engineer.

Unless otherwise shown on the Plans or directed by the Engineer, concrete thrust blocks shall be constructed at all changes in direction. Thrust blocks shall be constructed against undisturbed earth. Each thrust block shall be placed so that valves and fittings are accessible for repair. Thrust blocks shall be as shown on City of Torrance Standard Plan No. T713 or as directed by the Engineer.

The Contractor shall furnish and place a blue tape, marked "Caution Water" every 36-inches or less, on top of the bedding and prior to placing concrete slurry or densified backfill along the length of the potable pipelines. The Contractor shall furnish and place an identification tape marked "CAUTION-RECLAIMED WATER LINE BELOW," for reclaimed water pipes in accordance with 207-25.9 of these Special Provisions.

All water lines shall be installed with a two (2) feet clearance from existing utility lines. A minimum of 1-foot clearance shall be provided when crossing utility lines unless directed otherwise by the Engineer. Separation of water mains from sewer and storm drain lines shall conform to the requirements of City of Torrance Standard Plan No. T714.

All exposed piping shall be adequately supported with devices of appropriate design. Where details are shown on the Plans, the supports shall conform thereto and shall be placed as indicated; provided that the support for all piping shall be complete and adequate regardless of whether or not supporting devices are specifically called for on the Plans.

306-1.2.13 Installation of Plastic Pipe and Fittings.

Add the following:

PVC pipe construction shall conform to AWWA Manual No. M23, "PVC Pipe - Design and Installation," and the manufacturer's installation guide. Combined deflections at PVC pipe joints with factory-assembled bell couplings shall not exceed 2 degrees or 75 percent of that recommended by the manufacturer, if smaller. All fittings and valves shall be supported so that the pipe is not subjected to the weight of those appurtenances.

Add the following subsections:

306-1.2.14 Flexible Couplings. Flexible couplings shall be installed according to the following requirements:

1) Clean each pipe end for a distance of 6 to 8 inches. Remove oil, dirt, loose scale, and rust so that the gaskets will seat on the pipe barrel to provide a positive seal. Wire brushes or non-oily rags may

be used, depending on the condition of pipe ends.

2) Slip the follower rings over the pipe ends and slide them back over the cleaned area.
3) Wipe the gaskets clean, immerse them in soapy water or approved gasket lubricant, and slide them over the pipe ends.

4) Clean the coupling middle ring, paying particular attention to flare on the ends where the gasket will seat. Slip the middle ring entirely over the end of the pipe.

5) Position the end of the pipe to be joined to the other pipe such that a 1/2-inch gap is maintained between pipes. Center the coupling middle ring over the gap.

6) Lubricate the pipe and the flares of the middle ring with soapy water or gasket lubricant. Slide the gaskets and followers into place making sure the gaskets are pushed under the middle ring flare all the way around.

7) Insert the bolts. Nuts should be run on with the rounded or chamfered edge toward the follower ring.

8) Wrenching should be done progressively, drawing up the bolts on opposite sides a little at a time and returning to retighten until all bolts have a uniform tightness. During wrenching it is advisable to strike the follower rings with a hammer occasionally to make sure they are seating properly.

9) Torque application shall be in accordance with the manufacturer's recommendations.

306-1.2.15 Service Laterals for the Potable Water Distribution System. Installation of new service laterals for the potable water distribution system shall conform to AWWA C600 and City of Torrance Standard Plan Nos. T702, T703 and T704. In addition, new services shall conform to the following requirements:

1) Material shall be Type K soft copper.

2) No joints shall be made in service lateral runs without the Engineer's permission. All joints so allowed shall be silver-solder joints.

3) The Contractor shall cut and disconnect, at the meter boxes and at the main, all existing service laterals which are connected to the existing mains to be abandoned in place, and connect new service laterals to the existing meters and new water mains.

4) Minimum separation between service lateral connections to the main shall be 18 inches.

5) All service laterals shall be installed before new mains are pressurized and chlorinated.

6) All service laterals are to be installed, chlorinated, pressure tested and flushed before connection is made to meters.

7) Excavation pits for service laterals shall be backfilled at the end of each work day.

8) The Contractor shall replace existing damaged water meter boxes as directed by the Engineer. The CITY will furnish the meter boxes to be replaced. The existing cast iron meter box lids shall be returned by the Contractor to the CITY yard. Any meter boxes damaged by the Contractor's operation shall be immediately replaced at its expense.

306-1.2.16 Payment. Payment for installation of service laterals shall be per the Contract Unit Price and shall include connecting to existing and new meters and water mains, meter boxes, relocation and adjustment of meter boxes, repair of surrounding concrete driveway or sidewalk, abandoning existing

service and appurtenant work. No payment shall be made for service laterals until the service is connected to the new main and the Contractor has delivered a list with addresses, old meter numbers and new meter numbers.

306-1.3 Backfill and Densification.

306-1.3.1 General. Delete the seventh through the eleventh paragraphs and replace with the following:

Where trench is greater than two (2) feet wide or if trench walls are sloped, the trench shall be backfilled with Crushed Miscellaneous Base or other material with a sand equivalent of 30 or greater and shall be select granular material free from organic matter per City of Torrance Standard Plan No. T116-M, Notes 1A and 2A. Imported backfill material shall be in accordance with 306-1.3.7. Backfill material shall be moistened to optimum moisture content and compacted to 95 percent of maximum density in the upper 3 feet and 90 percent below the upper 3 feet.

306-1.3.2 Mechanically Compacted Backfill.

Add the following after the second paragraph of this subsection, as amended:

Mechanical compaction methods of placement shall not include a sheepsfoot wheel mounted on a backhoe below 3 feet or 1/2 of the internal diameter, whichever is greater, over the top of the pipe.

306-1.3.6 Mechanical Compaction Requirements. Replace the entire subsection with the following:

Mechanically compacted trench backfill shall be densified to a minimum relative compaction of 95 percent in the upper 3 feet of backfill and 90 percent below the upper 3 feet.

306-1.3.7 Imported Backfill.

Replace the first three paragraphs with the following:

Imported soil from a source outside the Project limits for use as backfill shall be clean, free from organic material, trash, debris, rubbish, broken Portland cement concrete, bituminous materials, or other objectionable substances and must have a minimum Sand Equivalency of not less than 20.

The Contractor shall inform the Engineer of the actual street address or location from which the intended backfill material will be furnished not less than 15 days prior to its use. The Engineer will determine the suitability of the material, the compaction of the material shall conform to the requirement of Section 306-1.3.2.

Should the imported material substantially differ from the Agency approved sample, it shall not be used for backfill and shall be removed from the Work site at the Contractor's expense.

Add the following subsection:

306-1.3.9 Compaction Tests. Tests to determine materials compaction shall be performed by a separate CITY-hired subcontractor, at the CITY's expense, except that all tests which fail to meet the requirements of these Special Provisions shall be paid for by the Contractor. Maximum density shall be determined in accordance with ASTM D1557 method, modified to use five layers. Field density tests shall be performed in accordance with the test procedure specified in ASTM D1556.

306-1.4 Testing Pipelines.

306-1.4.1 General. Modify subparagraph g) as follows:

g) Water Pipelines – Testing and disinfection of potable water pipelines shall be in accordance with 306-1.4.7 of these Special Provisions.

Add the following subsections:

306-1.4.7 Pressure Testing of Potable Water Pipelines. The Contractor shall furnish all equipment, tools, labor and materials necessary for testing the piping. Equipment shall include all pipes, fittings, valves and blow-off assemblies necessary to complete the test. In case fire hydrants are not available or cannot be used for flushing purposes, blow-off assemblies and other accessories shall be furnished by the Contractor at no cost to the CITY. Water for pressure testing will be furnished by the CITY without charge to the Contractor. The Contractor shall pressure test each phase of new waterline before proceeding to the next phase.

The Contractor shall test the piping after backfilling operations are completed. Pressure testing shall be performed on no more than 1,500 lineal feet of piping at one time. The test shall be made by closing valves when available, or by placing a temporary bulkhead in the pipe and filling the lines slowly with water. Care shall be used to see that air is permitted to escape during filling. After the line has been completely filled, it shall be allowed to stand under slight pressure for a sufficient length of time to allow the mortar lining to absorb what it will and to allow the escape of air from any air pockets, but for not less than 24 hours. During this period, bulkheads, valves, and connections shall be examined for leaks. If any are found, the leak shall be stopped, or in case of leakage through valves in the main line or through bulkheads, provision shall be made for measuring such leakage during the test. The test shall consist of holding the test pressure on each section of the line for a period of four (4) hours. The test pressure at the lowest point in the line shall be 150 psi. In areas designated as high pressure zone, the test pressure shall be 225 psi. The water necessary to maintain this pressure shall be measured through a meter or by other means satisfactory to the Engineer. The leakage shall be considered the amount of the water entering the pipeline during the test, less the measured leakage through valves and bulkheads. The leakage shall not exceed 25 gallons per inch of diameter per mile per 24 hours. Any noticeable leaks shall be repaired with new pipe or new fittings until a leakage is reduced to permissible limits.

306-1.4.8 Disinfection of Potable Water Pipelines. Upon completion of pressure testing, all new water pipelines shall be disinfected before they are placed in service. The Contractor shall furnish all equipment, tools, labor and materials necessary for disinfecting the water mains. Water for disinfection will be furnished by the City without charge to the Contractor. If a fire hydrant is not available or cannot be used for flushing purposes, blow-off assemblies and other accessories to accomplish disinfection shall be furnished by the Contractor. Disinfection shall be accomplished by chlorination in accordance with AWWA C651. All chlorinating and testing operations shall be done in the presence of the Engineer. Disinfection shall be performed on no more than 1,500 lineal feet of piping at one time. No separate cost will be paid for these items.

Disinfection shall conform to the following requirements:

1) The Contractor shall prepare and submit for approval a written disinfection plan for each section of pipe to be tested a minimum of two weeks prior to its implementation.

2) The disinfection methods and procedures shall be in accordance with AWWA C651 and approved by the Engineer.

3) The CITY will collect water samples for analysis prior to placing the new facilities in service. Should any sample fail to meet the requirements of the State Health Department, the chlorination procedures shall be repeated. The Contractor shall be responsible for any costs associated with resampling.

4) The Engineer shall be notified 72 hours in advance of any disinfection, flushing, tapping, or connections to the existing system.

5) Any new water main, hydrant, valve, service, and accessories that has a chlorine residual of more than 150 ppm, will be flushed to system residual and rechlorinated to less than 150 ppm.

6) Where connections are to be made to an existing potable water system, the point of connection shall be disinfected in accordance with AWWA C651.

7) When disposing of heavily chlorinated water, a neutralization agent shall be applied to the water to be wasted to neutralize the residual chlorine. The type and amount of neutralizing agent shall be in accordance with AWWA C651 and approved by the Engineer.

306-1.4.9 Pressure Testing of Reclaimed Water Pipelines. Pressure testing of reclaimed water pipelines shall be in accordance with 306-1.4.7 of these Special Provisions, except that test pressure shall be 200 psi as measured at the lowest elevation of the pipeline under test, or as directed by the Engineer.

306-1.4.10 Payment. There shall be no separate payment for testing and disinfection. These costs shall be included in the Contract Unit Price per linear foot of pipe installed.

306-1.5 Trench Resurfacing.

306-1.5.1 Temporary Resurfacing. Delete the last two paragraphs and replace with the following:

For concrete slurry backfill, a minimum of 24 hours shall elapse before temporary resurfacing will be allowed to be placed on the backfill. All temporary resurfacing shall be flush to adjacent surfaces. The Contractor shall be responsible to immediately repair or replace any damaged or settled resurfacing. The temporary resurfacing shall be replaced with permanent resurfacing not more than 15 calendar days after placement of temporary resurfacing.

There shall be no separate payment for temporary resurfacing. Full compensation for furnishing, placing, maintaining, removing, and disposing temporary resurfacing materials shall be included in the Contract Unit Price per lineal foot of pipe installed.

306-1.5.2 Permanent Resurfacing. Add the following:

Pavement removed or damaged in connection with performing the Work required under the Contract shall be replaced by the Contractor in accordance with these Special Provisions and City of Torrance Standard Plans. If a strip of existing pavement less than 4 feet wide is left between a trench and a gutter or curb or edge of pavement, it shall be removed and new pavement placed instead. In most cases if the plans show a distance of 5 feet or less between the water main centerline and the curb, there will be 4 feet or less of old pavement strip that shall be removed and replaced. In cutting or breaking up street surfacing, the Contractor shall not use equipment which will damage the adjacent pavement. If the adjacent pavement is damaged, the Contractor shall be responsible for replacing the pavement with the same kind or better at its expense.

306-1.6 Basis of Payment for Open Trench Installations. Add the following as first sentence of the first paragraph:

This subsection shall apply to payment of installed potable water mains, sewer and storm drain pipes.

Revise the second paragraph to read:

The price per linear foot for pipe and conduit in place shall be considered full compensation for all wyes, tees, bends, monolithic catch basin connections, and specials shown on the Plans; the removal of interfering portions of existing sewers, storm drains, and improvements; the closing or removing of abandoned conduit and structures; the excavations of the trench; the control of ground and surface waters; the preparation of subgrade; placing and joining pipe; connecting to existing systems; beddings; backfilling the trench;

permanent resurfacing; construction survey; shoring; and all other work necessary to install the pipe or conduit, complete in place.

Delete the phrase, "excluding temporary resurfacing" from the last two paragraphs.
Add the following to the last paragraph:

The Contract Unit Price also shall all costs associated with the Permit and inspections from LACDPW.

306-1.7 Basis of Payment for Open Trench Installations of Potable Water Pipelines. Payment for open trench installation of potable water pipelines shall be per the Contract Unit Price per linear foot and shall include full compensation for furnishing and installing pipe, fittings, thrust blocks, removing interfering portions of existing pipes, connection to existing pipelines, shoring, bedding, backfill, compaction, temporary and permanent trench resurfacing, abandoning of existing valves, abandoning of existing water pipelines, pressure testing and disinfection, construction survey and all appurtenances required for a complete system.

306-1.8 Basis of Payment for Open Trench Installations of Reclaimed Water Pipelines. Payment for open trench installation of reclaimed water pipeliens shall be per the Contract Unit Price per linear foot and shall include full compensation for furnishing and installing pipe, fittings, thrust blocks, removing interfering portions of existing pipes, connection to existing pipelines, coordination with West Basin Municipal Water District, shoring, bedding, backfill, compaction, temporary and permanent trench resurfacing, abandoning of existing valves, abandoning of existing water mains, pressure testing, construction survey and all appurtenances required for a complete system.

306-5 ABANDONMENT OF CONDUITS AND STRUCTURES. Add the following subsections:

306-5.1 Abandoning Existing Water Pipelines. The Contractor shall remove existing water pipelines and appurtenances from service at the locations shown on the Plans or as directed by the Engineer. Water mains specified to be abandoned in place, 12 inches in diameter and larger shall be filled with cement grout and have their ends cut, plugged and capped. Water pipelines specified to be abandoned in place, 10 inches in diameter and smaller shall have their ends cut, plugged, capped and left intact.

306-5.2 Abandoning Existing Water Valves. The Contractor shall abandon existing water valves at the locations shown on the Plans and in accordance with the following requirements:

1) Where the valves are located in the parkway, the valves shall be abandoned by closing the valves, removing the valve cans, filling the hole with satisfactory material, and compacting it to 95% of maximum density and restore area to match adjacent.

2) Where the valves are located in concrete, the valve shall be abandoned by closing the valves, sawcutting the concrete, removing the valve cans, and filling the hole with concrete.

3) Where the valves are located in the curb, the valve shall be abandoned by closing the valves, sawcutting the concrete, removing the valve cans and repairing the curb with concrete epoxy to the satisfaction of the Engineer.

4) Where the valves are located in asphalt, the valves shall be abandoned by closing the valves, sawcutting the asphalt, removing the valve cans, filling the hole with slurry to the bottom of the asphalt section, and providing an asphalt cap on slurry.

5) All valve can removals shall be done in the presence of the Engineer.

306-5.3 Payment. Payment for abandoning existing water pipelines and valves shall be per the Contract Unit Price and shall include all appurtenant work.

SECTION 308 – LANDSCAPE AND IRRIGATION INSTALLATION

308-2 EARTHWORK AND TOPSOIL PLACEMENT.

308-2.1 General. Add the following:

The landscape work shall not begin until all other trades have repaired all areas of settlement, erosion, rutting, etc., and the soils have been re-established, recompacted and refinished to final grades. The Engineer shall be notified of all areas where the landscape work is prevented from being executed.

Surface drainage shall be provided by modeling the surfaces to facilitate the natural run-off of water. Low spots and pockets shall be filled with topsoil and graded to drain properly. All soil shall be free of trash.

308-2.3 Topsoil Preparation and Conditioning.

308-2.3.1 General. Substitute Class A with Class C in the first sentence of the first paragraph.

Add the following:

Before soil preparation operations are started in any area, the Contractor shall remove and dispose of all trash and any other debris on the surface of the ground.

Mowing and spraying operations shall be performed in all areas throughout the limits of the landscape portion of the Work. The sequence of operations shall be determined by the Engineer. Before applying any chemical spray material, the Contractor shall obtain from the Engineer written approval of the material to be used, the rate, and method of application.

Weed eradication and control will minimize competition that could prevent establishment of native species. Especially invasive weed species expected at the project sites are listed in the following table; however, weed control may include other species not listed below.

Invasive Exotic Plants Expected For Removal and Control

Family ***Scientific Name***	**Habit**	**Common Name**
Apiaceae		
Conium maculatum	Biennial	Poison Hemlock
Foeniculum vulgare	Perennial	Fennel
Asteraceae		
Chrysanthemum coronarium	Annual	Garland Chrysanthemum
Senecio mikanioides (=Delairea odorata)	Perennial	Cape Ivy
Brassicaceae		
Brassica nigra	Annual	Black Mustard
Hirschfeldia incana	Annual	Short Pod Mustard
Lepidium latifolium	Perennial	Perennial Pepperweed
Chenopodiaceae		
Atriplex semibaccata	Perennial	Australian Saltbush
Euphorbiaceae		
Ricinus communis	Perennial	Castor Bean
Simaroubaceae		
Ailanthus altissima	Tree	Tree of Heaven
Tamaricaceae		
Tamarix spp	Tree	Tamarisk
Poaceae		
Arundo donax	Perennial	Giant Reed
Bromus madritensis rubens	Annual	Red Brome
Cortaderia jubata	Perennial	Pampas Grass
Polypogon monspeliensis	Annual	Rabbit Foot Grass

Monthly weeding will be required in the first 12 months at the sites. Quarterly weeding will be required thereafter for the next 36 months or until plants are established sufficiently to shade out weeds.

All maintenance personnel will be trained to distinguish weed species from native vegetation to ensure only weedy species are removed mainly by hand weeding or spot sprayed with herbicide application. All weeded material will be removed from the site and disposed of at an acceptable composting facility.

Any weed growth which subsequently appears shall be killed by additional spraying before the weeds exceed two (2) inches in height. At the time of planting, each area to be planted shall be free of living weeds of any height.

The Contractor immediately shall remove and dispose of mowed weed growth and all other debris generated by clearing and grubbing when so directed by the Engineer.

308-2.4 Finish Grading. Replace the second paragraph with the following:

The finish grade below adjacent paving, curbs or headers shall be one and one-half inches in shrub or groundcover areas.

308-4 PLANTING

308-4.1 General. Add the following:

Planting work shall not begin until the area's irrigation system has been installed, operational and passed inspection. Planting sites will be marked on the site using gypsum outlines. Plant mass types will be identified with plant name (botanic and common) on grade stakes. Planting area shall be reviewed by the Landscape architect.

Inspection and approval of specimens shall be required before delivery to site; all others on delivery. Any plants rendered unsuitable for planting because of this inspection shall be considered as samples and shall not be paid for. In case the sample plants inspected are found to be defective, the Engineer reserves the right to reject the entire lot or lots of plants represented by the defective samples. Rejected plants shall be removed from the site immediately. Random samples will be inspected for root condition.

All plants shall be true to name, and one of each bundle or lot shall be tagged with the name and size of plants, in accordance with the standards of practice recommended by the American Association of Nurserymen. The root condition of plants furnished in containers shall be determined by removal of earth from the roots of not less than two (2) plants, nor more than 2 percent (2%) of the total number of plants of each species or variety, except when container-grown plants are from several different sources; in which case, the roots of not less than two (2) plants of each species or variety from each source shall be inspected by the Engineer at his option. The selection of plants to be inspected will be made by the Engineer.

All plants of the same species and container size (i.e., the same specification) shall be uniform in size and shape and at the same stage of growth to the satisfaction of the Engineer.

All plants shall be fully acclimated and in an active growing state.

The Contractor shall remove all lateral growth that is not acceptable and/or shape all plants to the satisfaction of the Engineer.

All plants shall be full-sized and shall have root systems at a fully developed state within the container.

Hair roots should extend to the edge of the container. No plant shall be root-bound. Root balls may require scarification to the satisfaction of the Engineer.

No boxed, balled or canned plants shall be planted if the ball is broken or cracked, whether before or during the process of planting. Any plant transplanted by the Contractor that dies or has bark, branch or die-back injury shall be replaced at the Contractor's expense with an equal plant to the satisfaction of the Engineer.

No plants shall be transported to the planting area that are not thoroughly wet throughout the ball of earth surrounding the roots. Plants should not be allowed to dry out, nor shall any roots be exposed to the air except during the act of placement. Any plant that, in the opinion of the Engineer, is dry or in a wilted condition when delivered or thereafter, whether in place or not, will not be accepted and shall be replaced at the Contractor's expense.

All inspections herein specified shall be made by the Engineer. The Contractor shall request inspection at least 48 hours in advance of the time inspection is required. Inspection shall be required on the following stages of the work:

a) During preliminary grading, soil preparation, and initial weeding.
b) When plants are spotted for planting, but before planting holes have been excavated.
c) When finish grading has been completed.
d) When all specified work, except the maintenance period has been completed.
e) Final inspection at the completion of the maintenance period.

The Contractor's failure to obtain inspection will extend the start and/or finish of the maintenance period as applicable, unless otherwise agreed to in writing by the Engineer.

308-4.5 Tree and Shrub Planting. Add the following to the subsection:

308-4.5.1 Planting In Areas With Saturated Soils/Inundation Areas.

If areas are inundated prior to planting, then a drawdown of water shall be scheduled in order to plant the areas. Areas where drawdown is not possible should be planted only on the edges of standing water, out to a 6 - 8 inch depth.

Planting holes shall be made with the minimum disturbance to accommodate the rootballs.

Plants shall be set in the planting hole so that the crown of the root ball is at finish grade.

If areas shall be inundated immediately with water, then no irrigation is necessary. If areas will not be inundated immediately, then a temporary irrigation system will be required to keep the plants alive until the specified inundation cycle is expected to begin.

308-4.5.2 Planting In Non Inundated, Dry Soils and Upland Areas.

Planting holes shall be made with the minimum disturbance to accommodate the rootballs.

Prior to planting in dry soil, the planting hole shall be filled with water, and allowed to drain.

A fertilizer packet shall be added to each planting hole prior to planting.

Upland plants shall be set in the planting hole so that the crown of the root ball is approximately 0.5 inch above finish grade. Under no circumstance should the plant crown be buried.

A watering basin shall be provided around each plant from 18 – 24 inches in diameter or when on slope a front dam only.

Watering basins shall be filled with water after planting at least twice.

Center plant in pit or trench on slight pedestal. Face plants with fullest growth into prevailing wind. Set plant plumb and hold rigidly in position until soil has been tamped firmly around ball or roots. Position the plant in the hole and backfill no higher than halfway up the root ball. If required, place the recommended number of tablets evenly around the perimeter of, and immediately adjacent to, the root ball at a depth which is between the middle and the bottom of the root ball. Complete the backfilling, tamp (eliminating all air voids) and water. Do not pack.

Except for street trees, construct a berm 4" above finish grade, extending 4" to 6" beyond edge of root ball, forming a watering basin with a level bottom around each plant. After a minimum of 2 days soaking and the regular irrigation system is operating, the berm area shall be smoothed to finish grade.

308-4.9 Erosion Control Planting

308-4.9.3 Seeding and Mulching. Add the following to the subsection:

Prior to the application of hydro-mulch, the fine grading of all areas shall be inspected and approved by the Engineer.

Areas to be seeded will use a one-step hydroseeding technique to apply specified seed mix for each area. Hydroseeding will consist of a hydraulic application of a slurry mixture containing water, cellulose wood fiber, seed, AM fungi, and organic soil stabilizer as follows:

- 2000 lbs/ac of virgin cellulose wood fiber, and
- specified seed mix.
- 160 lbs/ac organic soil stabilizer (Ecology Control or comparable product).

Once the seed is added to the mixing tank, application must be made within one hour.

Seed shall be applied after holes are dug for container plants and prior to planting. Planting will be done carefully to avoid undo disturbance of the hydroseed. This sequence avoids the need to cover container plants to avoid spraying with hydroseed material.

All equipment used to apply hydromulch shall be subject to the approval of the Engineer. The equipment shall have a built-in agitation system and operating capacity sufficient to agitate, suspend and homogeneously mix a slurry containing not less than 40 lbs. of fiber mulch plus a combined total of 7 lbs. fertilizer solids for each 100 gallons of water.

Hydraulic spray nozzles shall provide a continuous non-fluctuating discharge. The slurry tank shall have a minimum capacity of 1,500 gallons and shall be mounted on a traveling unit, either self-propelled or drawn by a separate unit, which will place the slurry tank and spray nozzle within sufficient proximity to the areas to be seeded.

The slurry preparation shall take place at the site of Work and shall begin by adding water to the tank when the engine is at half throttle. When the water level has reached the height of the agitator shaft, good re-circulation shall be established and at this time the seed shall be added. Fertilizer shall then be added to the mixture after the seed and when the tank is at least one-third filled with water.

The engine throttle shall be opened to full speed when the tank is half filled with water. All the wood pulp mulch shall be added by the time the tank is two-thirds to three-fourths full. Spraying shall commence immediately when the tank is full.

Spray the area with a uniform visible coat using the dark color of the cellulose fiber or organic amendment as a visual guide. The slurry shall be applied in a downward drilling motion via a fan stream nozzle. It is important to ensure that all of the components enter and mix with the soil.

All slurry mixture which has not been applied within four (4) hours after mixing shall be rejected and removed from the Work at the Contractor's expense.

Special care shall be exercised by the Contractor to prevent any of the slurry from being spilled or sprayed anywhere except onto areas to be hydroseeded. Any spillage or overspray immediately shall be removed by and at the expense of the Contractor to the satisfaction of the Engineer.

Seed shall be applied at a rate as noted on drawings.

If complete and full germination is not obtained within 14 days, the Contractor shall hand seed with the same seed mixture and top dress with nitrohumous and redwood soil amendment all areas designated by the Engineer.

Add the following subsections:

308-4.10 Existing Trees.

308-4.10.1 Conservation Methods. Manual operations shall be employed for the removal of plant materials and soil to establish a finished grade within 4 feet of existing trees to remain.

Tree root systems must remain adequate to withstand heavy windstorms.

Construction equipment, materials, sand, soil, gravel, or other material shall not be placed, parked or stored on the surface of any unpaved areas within the driplines (outermost reach of branches) of street trees. No chemicals, rinsates, or petroleum products shall be deposited within the driplines of street trees.

308-4.11 Payment. Payment for providing prepared topsoil, furnishing and planting trees, shrubs, and plants shall be included in the lump sum Contract Unit Price for Landscaping and Irrigation.

The Contract Unit Price for all planting shall include full compensation to install the specified plants and trees complete in place, as shown on the Plans and in accordance with these Special Provisions, including providing prepared topsoil, backfill, restoration of adjacent and all appurtenant work.

308-5 IRRIGATION SYSTEM INSTALLATION

308-5.1 General. Add to the last paragraph:

The record drawings of the irrigation system shall show locations and depths of the following items:

a) Points of connection.

b) Routing of sprinkler pressure lines (dimension at a maximum of 100 feet along routing).

c) All gate valves.

d) Quick coupling valves.

e) Rerouting of control wires.

f) Other related equipment (as directed by Engineer).

The Contractor shall verify the water pressure available at the site before installation of the irrigation system to make sure there is adequate pressure to properly operate the irrigation heads and valves. If the pressure provided at Work site or any other Work condition will create problems that will prevent proper operation of the irrigation system, the Engineer shall be notified before commencement of any work. Minor additions and adjustments of heads, piping, and circuits shall be made at no additional cost to the CITY

where it is necessary to make the irrigation system operate properly.

308-5.2 Irrigation Pipeline Installation.

308-5.2.1 General. Add the following:

Trenching machines or other mechanical means of excavation shall not be used for excavation of trenches where such use may damage existing improvements. However, in any case, the Contractor will be held responsible for any damage to existing improvements caused by their operations and any damage so occurring shall be repaired to the satisfaction of the Engineer by and at the expense of the Contractor.

Trench excavation for pipelines shall be made on the alignments shown on the Plans. Unless otherwise shown, lateral water lines shall have a minimum cover of twelve inches (12") of soil. Main water lines shall have a minimum cover of 36" of soil.

Irrigation pipe shall be installed in conformance with 308-5.2.3. Pipe flushing and pressure testing shall conform to 308-5.6.

At any location where irrigation pipe has less than 15" of cover due to interferences or other adjustments, the Contractor shall, at its own expense, provide a galvanized sleeve or other protection to the satisfaction of the Engineer. No extra costs shall be allowed for this protection.

Bedding material for irrigation piping shall be sand conforming to the requirements of 200-1.5.3 (minimum SE of 70) and 200-1.5.5.

Backfill material placed in the pipe trenches and immediately over electrical wiring shall be select material free from stones or other material that might damage the pipe or insulation on the conductors.

Backfill of irrigation pipe shall conform to 308-2.2.

Densification of bedding material shall be per 306-1.3.3.

All trenches shall be compacted to the same compaction as the adjoining area and finished flush with adjoining grades.

Unless otherwise directed by the Engineer, pressure piping shall be provided with PCC thrust blocks. Thrust blocks shall be constructed at the following places:

a) Where pipe changes direction at fittings.

b) Where pipe changes size.

c) Where line terminates.

d) Around gate valves (bottom half of valve in concrete; bolts exposed for change of top half).

308-5.3 Installation of Valves, Valve Boxes, and Special Equipment. Add the following after the fifth paragraph:

Remote Control Valves shall be installed in accordance with APWA Standard Plans and manufacturer's specifications. Remote control valves shall be 6 inches to 8 inches below finished grade, measured to top of cross arm in "open" position, or as detailed on the Plans.

Master RCV shall be installed adjacent to and downstream of the cross connection preventer.

Pressure Relief Valves shall be installed as shown on the Plans in a locking valve box per 212-2.2.7 of

these Special Provisions. Set for 125 lb. operation.

Add to the last paragraph.

Backflow devices shall be installed in accordance with the requirements set forth by the Uniform Plumbing Code, latest edition and latest supplements thereto, on GSP, wrapped and set in PCC per City of Torrance Standard Plan No. T711.

308-5.4 Sprinkler Head Installation and Adjustment.

308-5.4.2 Location, Elevation, and Spacing. Add the following to the first paragraph:

Any deviation to spacing and location of sprinkler heads shall be reported to the Engineer and have his approval before installation.

Add the following:

The Contractor shall coordinate the installation of all sprinkler heads, including pipe, with the Plans to avoid interfering with trees or other planting and/or permanent pavement.

No spray from sprinkler heads will be permitted to throw into public streets or onto walks, driveways or parking areas.

308-5.5 Automatic Control System Installation. Replace the entire subsection with the following:

Automatic controllers shall be installed approximately where shown on the Plans after having verified exact positioning with the Engineer. Units shall be installed plumb and in a manner as recommended by the manufacturer in the enclosure specified in 212-3.4 of the Special Provisions.

For low voltage installations, a continuous wire shall be used between the controller and remote control valves. Under no circumstances shall splices exist without prior approval. All wire shall be installed in PVC casing (no direct burial) unless otherwise approved by the Engineer. Said PVC casing shall be in addition to the galvanized casing where applicable.

Sizing of wire shall be according to the controller manufacturer's recommendations and in no case less than #14 in size.

All control wires shall be black in color. All ground wires shall be white in color. An extra wire (neither white nor black) shall be installed extending to the furthest valve for possible future use.

Stamped brass identification tags shall be connected to each wire exposed in access boxes and at each remote control valve. Tag size shall be 1" long by 1/2" high, with 1/4" high numbers deeply stamped thereon indicating valve sequence number. Tags shall be tied with bare copper tie wire. Sequence shall be approved by the Engineer. All splices shall be made in a valve box and inspected by the Engineer and all remote control valves shall be tested for operation prior to backfill.

Add the following subsections:

308-5.7 Controller Charts. Upon completion of the Work, the control system shall be in operating condition with an operational chart mounted in the controller cabinet.

The Contractor shall provide two controller charts for each controller supplied showing the area covered by the automatic controller on the maximum size sheet which the controller or controller cabinet door will allow. The chart may be a reduced drawing of the actual as-built system. However, in the event the controller sequence is not legible when the drawing is reduced, it shall be enlarged or redrawn to a size that will be readable.

The chart shall be a blackline print, and a different color shall be used to show area of coverage for each station.

When completed and approved, one of the charts shall be hermetically sealed between two pieces of plastic, each piece being a minimum 20 mils. thick. This chart shall be mounted using Velcro or approved equal type of tape. The other chart shall be given to the Engineer.

These charts shall be completed and approved prior to final inspection of the irrigation system.

308-5.8 Electrical Service and Meters. The electrical meter shall be installed in an enclosure conforming to 212-3.4 of these Special Provisions. The Contractor shall provide the enclosure and any necessary pull boxes. The enclosure location shall be established in the field by the Engineer. The service location is shown on the Plan.

Southern California Edison Company (SCE) will furnish the electrical meter and will install the wires and conduits from the electric line to the electrical meter. It is the Contractor's responsibility to coordinate its 120 VAC electrical connections with SCE and include any delay in obtaining installation of the meter in its schedule. Controllers shall be fully automated and tested prior to start of maintenance period. SCE will bill the CITY directly for this connection.

308-5.9 Payment. Payment for the installation of the irrigation system shall be included in the lump sum Contract Unit Price for Landscaping and Irrigation. There shall be no separate payment for furnishing and installing pipe, fittings, valves, controllers, enclosures, special equipment, and electrical work.

308-6 MAINTENANCE AND PLANT ESTABLISHMENT. Replace the entire subsection with the following:

The Establishment and Maintenance Period shall begin on the first day after all planting in this Work is completed and accepted, and shall continue thereafter until 1095 calendar days have passed. Notify the Engineer at least 15 days in advance of completion. Failure by the Contractor to notify the Engineer will delay the start of the Establishment and Maintenance Period.

Should the Establishment and Maintenance Period be extended beyond the prescribed calendar days because of rejection by the Engineer for whatever reason, the entire installation shall remain the responsibility of the Contractor unless otherwise determined by the Engineer. Any rejected material shall be replaced and the 1,095 calendar day Establishment and Maintenance Period shall be restarted from that time for the replaced material only.

All areas landscaped or restored under this Contract shall be maintained by the Contractor. The Contractor, without any expense to the CITY, shall weed the planted areas as needed and shall remove all accumulated debris from the landscaped areas as needed and/or as called for by the Engineer.

Young trees and shrubs shall be monitored for signs for disease, insect and/or predator damage, and treated as necessary. Local wildlife such as rabbits, pocket gophers and ground squirrels may be expected to browse on the plantings. If the plantings are being jeopardized by wildlife, corrective measures such as organic, nontoxic deterrents and fencing/plant cages maybe used as required to allow plants to grow.

The area shall be well maintained in order to deter vandalism and dumping of trash. The contractor is responsible for avoiding impacts to plantings during trash removal activities. The restoration contractor shall, during routine maintenance, manually remove weeds, liter, trash, and debris from the sites and dispose of offsite as permitted by law. Dead limbs and tree fall shall be left in place in the restoration areas.

One month after planting, fertilize plants with as required in the soils reports. The Engineer may require additional fertilization at each monthly interval.

Apply Iron Sequestrene as specified by the manufacturer immediately at the onset of any symptom of iron chlorosis. Repeat fertilization monthly for duration of maintenance period.

The above fertilization schedule may be revised by the Engineer if, in his/her opinion, optimal plant health and growth is not being obtained. The Contractor shall comply with all changes as directed.

The Contractor shall be responsible to provide adequate water to all plants without overwatering. Water conservation is mandated. The Contractor shall obtain approval from the Engineer for its proposed irrigation schedule and any changes thereto.

308-6.1 Payment. Payment for Plant Establishment and Maintenance Period shall be on a lump sum basis per the Contract Unit Price. The Contract Unit Price shall include full compensation for all tools, materials, labor, equipment, water and incidentals to complete this work in accordance with the Plans and Special Provisions.

308-7 GUARANTEE. Add the following:

The Contractor, without expense to the CITY, shall adjust all irrigation heads to their appropriate operational heights, shall adjust and clean or replace, if necessary, all irrigation heads so that the planting areas are properly covered and they shall be adjusted so as to prevent excessive overflow into the adjacent street right-of-way.

The CITY reserves the right to make temporary repairs as necessary to keep the irrigation system equipment in operating condition. The exercise of this right by the CITY shall not relieve the Contractor of its responsibility under the terms of the Contract as herein specified.

Maintenance shall be done by qualified and experienced irrigation pipefitters.

All fifteen (15) gallon and larger trees installed under the contract shall be guaranteed to live and grow for one (1) year from the date of final acceptance of the contract work unless decline of the tree is specifically attributable to causes unrelated to installation, plant material quality, and the Contractor's maintenance practices.

All other plant material shall be guaranteed to live and grow for a period of ninety (90) calendar days from the date of final acceptance of the contract work unless decline of the plant material is specifically attributable to causes unrelated to installation, plant material quality, and the Contractor's maintenance practices.

Any plant material found to be dead, missing, or in poor condition during the post-construction maintenance period, shall be replaced immediately at the Contractor's expense. The Engineer shall be the sole judge as to the condition of the material. Replacement shall be made to the same specifications required for the original plantings.

During the guarantee period, should the Contractor fail to expeditiously replace dead plant material upon written notification by the Engineer, the City shall cause the work to be corrected and bill the actual costs incurred to the Contractor.

308-8 PAYMENT. Replace the entire subsection with the following:

The Contract Unit Price for "Landscaping and Irrigation" shall include full compensation to install the landscaping and irrigation systems (as detailed in this Section, including prepared topsoil) complete in place, as shown on the Plan and per these Specifications, excluding Plant Establishment and Maintenance.

Amend the following subsections:

308-9 IRRIGATION PUMP SPECIFICATIONS

308-9.1 General. The irrigation pump/piping system shall be manufactured by "John Deere Green Tech" or equal.

The pump station performance at enclosure limits shall be as noted in the technical specifications. The capacity, discharge pressure, and discharge pipe dimensions shall be per the technical specifications. The pump shall operate at no more than 3600 RPM. The power supply to the station shall be as noted in the technical specifications.

The station shall be completely wired, piped, dynamically flow and pressure tested prior to shipment.

Operational sequence: the pump shall activate automatically upon a drop in manifold pressure to an adjustable set point. Operation shall be maintained at an adjustable minimum flow. The pump shall be automatically retired when system flow drops below the minimum adjustable set point and the pressure set point has been met for an adjustable time delay.

308-9.2 Pump and Motor.

308-9.2.1 Pump. The pump shall be a submersible type. Bowl assembly including suction case intermediate bowls and discharge bowls shall be of cast iron. The impellers shall be of bronze, statically balanced. Each pump shaft is to be turned, ground, and polished stainless steel having a chromium content of not less than 12%. It shall be supported by bearing above and below each impeller. The size of each shaft shall be appropriate to transmit the horsepower required by the pump. The pump shall have a corrosive resistant basket type strainer with an area no larger than ¼".

308-9.2.2 Motor Submersible. The motor shall be a submersible type and meet applicable NEWA Standards. The motor shall be of corrosion resistant constructions, 316 stainless steel shell, splined stainless steel shaft, cast iron end bells, hermetically sealed windings, Kingsbury-type bearings, pressure equalizing diaphragm, removable "water-bloc" lead connector and U.L. 778 recognized.

308-9.3 Piping Manifold, Valves, Gauges, and Other Mechanical Equipment.

308-9.3.1 Fabricated Piping. All steel fabricated piping shall conform to ASTM specifications A53 for Grade B welded or seamless schedule 40 pipe. All welded flanges shall be forged steel, slip-on or weld neck type. All welded fittings shall be seamless, ASTM specification A234, with pressure rating not less than 150 psi.

308-9.3.2 Check Valve. Pump check valve shall be of the silent operating type that begins to close as forward velocity diminished and be fully closed at zero velocity preventing flow reversal. Valve bodies shall be cast from ASTM-126C cast-iron or better and shall be free from blow holes, sand holes, and other impurities. The valve design shall incorporate a center guided spring loaded poppet, guided at opposite ends and having a short linear stroke that generates a flow area equal to the pipe diameter. Internals shall be machined bronze disc, seat, and stem guide. Valves shall be sixed to permit full pump capacity to discharge through them without exceeding a pressure drop of 2.5 psi. Valves 4" and smaller shall be pressure rated for 250 psi.

308-9.3.3 Station Discharge Isolation Valve. Isolation valves shall be butterfly type with ten position lever for sizes 4" and smaller and gear operations for sizes above 4". All shall be rated at 200 psi wog working pressure. Trim shall included stainless steel stem, bronze or nickel coated iron, streamlined disc, and full faced resilient seat designed to eliminate need for flange gaskets.

308-9.3.4 Drain Valves. Drains are to be provided from any possible low point in the manifold and are to consist of ¼" brass petcocks.

308-9.3.5 Pressure Gauges. A compound pressure gauge shall be located on the pump suction and on the discharge manifold for easy reading of the suction vacuum and discharge pressure. Pressure gauges shall be 304 stainless steel case and bezel construction. Gauges shall be 2-1/2" diameter, liquid filled. Pressure sensing connection shall be ¼" NPT lower gauge connection.

308-9.3.6 Variable Frequency Drive Pressure Regulation. The variable frequency drive shall be IGBT based with selectable carrier frequency up to 15 kHz. The VFD shall include terminals for incoming power, motor output power, and control terminals.

The VFD shall generate a sine-coded, variable voltage/ frequency, three phase output for optimum speed control. The VFD shall incorporate power loss ride-through for a minimum of 2 seconds. VFD protective features shall include current limit, auto restart, short circuit protection, electronic motor overload protection and ground fault protection. The VFD shall have a push button programming display for easy access to operation parameters. The VFD shall be protected on the primary side by fuses of the appropriate amperage.

Overload capacity: 120% rated output current for one minute.
Voltage fluctuation: +10%, -15%.
Sine wave PWM with full range, automatic torque boost.
Frequency control range: 0.1 to 400 Hz.
Frequency accuracy: digital, 0.01 Hz, analog. 0.1%.
Motor overload protection, instantaneous over current of 180% of rated output current.
Over voltage at 820voc if 460v input.
Under voltage: user adjustable.
Momentary power loss: up to 2 second ride through.
Electronic ground fault.
LED capacitor charge indicator.
Input phase loss alarm.
Ambient temperature range of +14 to 104° F.
Humidity of 95% non-condensing.

308-9.3.7 Pressure Transducer. A solid state pressure transducer shall provide a noise free, linear output proportional to discharge pressure. Transducer shall be solid-state, strain gauge type with integral voltage regulation and output accuracy not less than 0.25%. Transducer shall be constructed of stainless steel and rated for the pump station discharge pressure called out in the technical specifications.

308-9.4 Electrical Controls

308-9.4.1 General. The complete control panel assembly shall be built in accordance with the provisions of the national electrical code and shall bear the U.L. listing mark for NEMA 1 industrial control panels along with the pump station manufacturers' U.L. panel shop file number. (Panel U.L. File No: E142155)

308-9.4.2 Combination Motor Starter/Breaker. Each motor shall be protected by a MSP combination starter and breaker. The device will be U.L. 508 Type F. Motor starter protector and contractor are electrically and mechanically linked by means of a link module and adapter plate. All starters are suitable for use in group installation applications according to NEC-430-53(C).

308-9.4.3 Main Station Disconnect and Fusing. A three-pole service rated main station disconnect shall be mounted in a separate NEMA 4 enclosure outside the pump station enclosure to completely isolate the pump station electrical system from incoming power. The service disconnect shall not be located inside the pump enclosure.

308-9.4.4 Programmable Logic Controller. The pump sequence controller shall be an industrial grade PLC with diagnostic LED for monitoring of discrete inputs and outputs. Not less than two additional analog inputs and outputs shall be standard for monitoring and control purposes. The PLC shall contain two

communication ports for battery backed RAM and non volatile memory for storage of critical configuration data.

308-9.4.5 Operator Interface. The operator interface shall display pump system running status including timer status and alarm status on a two-lined display. For security, the operator interface shall have password protection to prohibit unauthorized access to certain parameters. The interface shall also have a built-in diagnostics function for the status of the programmable controller. The operator interface will be able to show current GPM and psi if flow and pressure sensor options are called out for in the technical specifications.

308-9.4.6 Secondary Control Circuit Breakers. Single-pole secondary distribution breakers with appropriate ratings shall supply power to the pump starter coil circuit, the control system, and to other circuits as specified.

308-9.4.7 Flow Sensor. The pump station discharge manifold shall incorporate an insertion type, pulse frequency output flow sensor for continuous output to the pump station controls. The flow sensor output pulse shall be conditioned and fed directly to the PLC interrupt input for conversion and display in gallons per minute and totalize for accuracy and security considerations, conversion to an analog signal prior to PLC input shall not be accepted. Flow sensor accuracy shall be no less than 2% for flow velocities ranging from 1-30 feet per second.

308-9.4.8 National Electrical Code Standards. Electrical controls shall conform to national electrical code standards and be U.L. listed.

308-9.4.9 Lighting Arrestor. The main power supply to the pump station shall be equipped with a secondary lighting arrestor having a breakdown current rating of not less than 60,000 AMPs at 14,000 volts discharge. Power supplies 300 volts and less shall use a 300 volt arrestor with an 800 volt spark-over voltage. Power supplies up to 600 volts shall use a 600 volt rated arrestor with a 1,000 volt spark-over voltage.

308-9.4.10 Corrosion Inhibiting Modules. Corrosion inhibiting modules shall be installed in the main electrical control enclosure in accordance with the manufacture's recommendations.

308-9.4.11 Low Discharge Pressure Safety Shutdown. Low discharge pressure is to be sensed by the pump starting set point. When the station discharge pressure decreases to this point and maintains a start signal for the time called out in the technical specifications. The pumps will be de-energized and remain so until the circuit is manually reset. The operator interface shall illuminate to indicate a low discharge pressure shutdown has occurred.

308-9.4.12 High Discharge Pressure Safety Shutdown. High discharge pressure it to be sensed by the pump starting set point. When the station discharge pressure increases to this point and maintains a start signal for the time called out in the technical specifications. The pumps with be de-energized and remain so until the circuit is manually reset. The operator interface shall illuminate to indicate a high discharge pressure shutdown has occurred.

308-9.4.13 VFD Fault Alarm (Option Required with VFD Control System). The operator interface shall illuminate to indicate a VFD shut off fault. Manual reset will be required.

308-9.5 Mounting Base, Enclosure Discharge Pipe

308-9.5.1 Mounting Base. Construction shall include a fabricated base assembly to support all components during shipping and to serve as the installed mounting base. The pump station base shall be formed from a single sheet of ¼" plate resulting in a seamless, one piece base with rounded edges and corners. Height is to be 3-1/2" inches. The base shall be strategically reinforced beneath as required to provide additional support and strength. The base shall be drilled and tapped allowing the pump to be secured to the base. The base shall be shot blasted to bare metal prior to painting process.

308-9.5.2 Enclosure. Construction shall include a weather resistant, 14 gauge or equivalent, all metal enclosure. The front side of the enclosure shall have oversized cooling vents. The enclosure is to be supplied with a two internally mounted gas struts that shall extend to keep the access door open. All components are to be accessible from top and front sides with the door completely open. The enclosure is to be suitable for mounting to the pump station base and shall include openings for suction and discharge piping.

308-9.5.3 Exhaust Fan. For the purpose of cooling the pump motor, switchgear and control logic, an exhaust fan shall be located inside the pump enclosure, mounted to the enclosure lid. The exhaust fan shall be activated upon pump start and shall run until the pump stops. The fan shall be black die-cast aluminum construction with UL94V-0 rated polycarbonate propeller and rated for not less than 240 cfm. The fan motor shall be a permanent split capacitor type with stainless steel ball bearings, class B insulation and automatic thermal protection.

308-9.5.4 HDPE Fabricated Submersible Pump Sled. The pump station manufacturer will fabricate a submersible pump sled from HDPE piping and HDPE components. The sled shall be designed for each specific application with the proper size and quantity of pump tubes, check valves and discharge fitting. The sled shall include a low level alarm device as described in the technical specifications. The submersible motor shall be cooled via a screened inlet as described in the technical specifications. The sled will include as a standard 100' of stainless steel cable to assist in removal from the water source.

308-9.5.4A HDPE Discharge Piping. The discharge piping from the submersible pump sled to the on-shore control station shall be fabricated from high density polyethylene pipe and equipped with flanged connections to simplify removal or adjustment. Length and diameter will be as shown on plans or technical specifications. Individual pressure regulating valves shall be butterfly type with electric motor gear actuation. The maximum allowable pressure drop across the butterfly valve at full pump capacity shall not exceed one psi. The butterfly valve shall be rated for not less than 285 psi.

308-9.5.5 Filtration System. The pump station shall be equipped with a filtration system to assure a clean water supply to the irrigation system. The filtration shall consist of individual barrels containing removable filter elements. The number of barrels, the specific filter model number and filter screen micron rating shall be called out in the technical specification. Each removable filter element shall consist of a course screen in series with a fine screen. The fine screen shall be flushed periodically to remove accumulated debris.

Flushing initiation shall be a timed interval, user adjustable, and a pressure drop across the screen, also user adjustable. Flushing control shall be governed by the pump station PLC. Separate flushing controls shall not be accepted.

Flushing action shall be initiated by an electronically actuated solenoid valve.

Operation: water shall flow into the filter body and through the 316 stainless steel filtering screen from the inside out allowing blocked contaminates to accumulate on the inside surface of the filtering screen. Differential pressure across the filtering screen shall be continuously monitored as the filter cake builds on the inside of the filtering screen. The differential pressure across screen shall be monitored using a pressure transducer upstream and downstream of the filter assembly. Using a differential pressure switch is not acceptable. The pump station control logic shall have the capability of graphically tracking the pressure across the filter for troubleshooting purpose locally at the pump station through the touch screen operator interface device and through the remote monitoring and control software. When the differential pressure reaches an adjustable threshold (recommended at 7 psi) a flush cycle shall be initiated by the opening of the electric butterfly valve. The opening of the flush valve drops the pressure inside the drive chamber allowing flow to reverse through the suction scanner nozzles. The suction scanner nozzles transfer this reduced pressure at the nozzle location onto the inside of the filtering screen surface. This reduced pressure on the inside of the filtering screen creates a reversed flow through the filtering screen, pulling the containments off

the screen, back through the suction scanner nozzles and out the flush valve. Once the nozzles have traversed and cleaned the entire screen surface, the flush valve shall close stopping the flush cycle.

The drive mechanism of the filter shall not consist of electric motor, or limit switches to return the drive mechanism to its start position. The drive mechanism shall allow the suction scanner nozzles to traverse across the screen and return to their start position, and if required, to continue this cycle indefinitely without interrupting the flush flow. A hydraulic motor directly attached to the suction scanner shall drive the suction scanner.

The filter screen element shall be 316 stainless steel with micron opening size called out for in the technical specification. The filter housing and cover shall be manufactured from 316 stainless steel and shall be manufactured to ASME standards but not stamped unless called for in the technical specification.

308-9.6 Painting (Piping System). Painting of the piping system shall consist of a multi-step coating system which includes metal preparation, rust inhibitive baked epoxy prime coat, and a two part ultraviolet light insensitive baked polyurethane finish having total dry film thickness of not less than 5 mils. Prime coat and finish coat shall be baked at 165 degrees for not less than 30 minutes to achieve a high gloss, corrosion resistant finish. Exterior pump station piping components shall be painted the same color as the station.

308-9.7 Testing. The pump station and all its component parts shall undergo a complete hydraulic and electrical test prior to shipment from the factory. Testing shall be dynamic and include operation over the entire flow range of the pump station under specified suction and net discharge pressure conditions. A plot containing actual flow, pressure, kW consumption and motor RPM shall be furnished if requested.

308-9.8 Owners' Manual. The owner's manual will contain an as-built drawing of the pump station, model number and part number of all normally replaceable components, and a troubleshooting guide. Complete start up instructions shall be provided by the manufacturer in the owner's manual.

308-9.9 Warranty. The manufacturer shall warrant the pump station to be free of defects for one year from date of start up or fifteen months after shipment, whichever occurs first. Failures caused by lightning strikes, power surges, vandalism, operator abuse, or acts of god are excluded from warranty coverage.

SECTION 310 - PAINTING

310-5 PAINTING VARIOUS SURFACES.

Add the following subsections:

310-5.7 Exterior Coatings for Exposed Water Pipes and Appurtenances

310-5.7.1 General. The exterior surfaces of water pipes and appurtenances that will be exposed to the atmosphere inside structure or above ground shall be thoroughly cleaned and then given a shop coat of rust-inhibitive primer conforming to 210-1.8 of these Special Provisions.

Where practicable, each succeeding coat of paint shall be of a different color. Colors as specified shall be maintained unless found to be no longer available from the manufacturer. If an alternative paint system is selected and approved by the Engineer, the Engineer will select the colors to be utilized from the color samples presented.

Each coat shall produce a minimum film thickness as specified herein. In areas where this thickness is not developed, sufficient additional coats shall be applied to produce it. All coating thicknesses specified herein refer to minimum dry film thickness.

Manufacturer's instructions shall be strictly followed in the application of proprietary coatings and materials.

310-5.7.2 Ungalvanized Ferrous Metals. Prior to coating, surfaces shall be sandblasted in accordance with SSPC-SP-6 (Commercial Blast Cleaning), except that where, in the Engineer's opinion, sandblasting is inappropriate because of the size, location or nature of the surface, or because of the difficulty in protecting adjacent work, such surfaces shall be either power tool cleaned in accordance with SSPC-SP-3 (Power Tool Cleaning) or hand tool cleaned in accordance with SSPC-SP-2 (Hand Tool Cleaning).

All paint shall be brush applied unless an alternate method is approved in advance by the Engineer. Surfaces shall be primed or spot primed as required. Prime coat shall be 2 mils. followed by two succeeding coats of 2 mils. each. Total thickness of the completed coating system shall be 6 mils.

310-5.7.3 Galvanized Ferrous Metals. Prior to coating, surfaces shall be cleaned in accordance with SSPC-SP-7 (brush-off blast cleaning).

All paint shall be brush applied unless an alternate method is approved in advance by the Engineer. Surfaces shall be primed or spot primed as required. Prime coat shall be 2 mils. followed by two succeeding coats of 2 mils. each. Total thickness of the completed coating system shall be 6 mils.

310-5.7.3 Payment. There shall be no separate payment for painting and coating. This cost shall be included in the work to which it is appurtenant.

310-5.8 Painting of Reclaimed Water Piping and Appurtenances.

310-5.8.1 General. The Contractor shall furnish all material, labor, and equipment necessary to line and coat all piping, valves, fittings, pipe hangers, and other ferrous metal surfaces not shop lined and coated in accordance with the following schedule:

Item	Color	No. of Coats
Valve Box Covers	Purple	2
Air Valve Blow-off Valves	Purple	2
Vault Covers (Top)	Zinc Chromate Primer	1
	Aluminum	2
Vault Covers (Underside)	Koppers No. 50 Bitumastic	2
Piping and Valves (In Vault)	Tenman 66	2
Guard Posts	Safety Yellow	2
Aboveground or Exposed Pipe	See Section 310-5.8.3	---

310-5.8.2 Surface Preparation. All ferrous surfaces to receive protective coatings shall be sandblasted to commercial standards per 310-2.5 prior to the application of coatings. All surface irregularities such as weld spatter, sharp corners, rough welds, etc., shall be ground smooth. All surfaces shall be completely free of grease, oil, and other foreign material.

310-5.8.3 Aboveground or Exposed Pipeline. Pipeline which will be aboveground or permanently exposed to the environment will be prepared and coated using Zinc Rich Primer/Epoxy/Urethane coating system as follows:

310-5.8.3.1 Preparation. Surfaces may be shop primed and coated or field coated. Preparation of metal surfaces shall be in accordance with the manufacturer's recommendations and in accordance with SPC-SP10, "Near White Blast Cleaning."

Coated surfaces damaged during shop priming or installation shall be prepared and recoated in accordance with the coating manufacturer's recommendations and these specifications.

310-5.8.3.2 Coating System. The coating system shall be a 3-coat system as follows:

Primer: Tnemec; Series 90-97, "TnemeZinc," Zinc Rich Urethane Primer - 3 mils.

Intermediate: Tnemec; Series 66, "Hi-Build Epoxoline," Epoxy - Polyamide Coating - 4 mils.

Finish: Tnemec; Series 75 "Endura-Shield," Hi-Build Acrylic Polyurethane Enamel - 4 mils.

310-5.8.3.3 Inspection. Inspection shall be as follows:

Shop primed or factory finished items shall be inspected at the job site before further painting or coating. Areas of chipped, peeled, or abraded coating shall be in accordance with these requirements.

Contractor shall provide scaffolding and testing equipment to permit inspection.

Color shall be selected by the Engineer from submitted paint samples of the manufacturer's standard colors.

310-5.8.4 Payment. There shall be no separate payment for painting and coating. This cost shall be included in the work to which it is appurtenant.

310-5.9 Waterproofing (Concrete).

310-5.9.1 General. The Contractor shall furnish all material, labor and equipment necessary to waterproof the interior and exterior of all manholes and vaults.

310-5.9.2 Surface Preparation.

1) Do not treat concrete surfaces with chemical hardeners or curing agents prior to the application of waterproofing.

2) Examine surfaces to be waterproofed for form tie holes and structural defects, such as honeycombing, rock pockets, faulty construction joints, cracks, etc. Repair these areas in accordance with Section 303.

3) Concrete surfaces shall have an open capillary system to provide tooth and suction and shall be clean, free from scale, form oil, latency, curing compounds, and any other foreign matter. Lightly sandblast, water blast, or acid etch with muriatic acid (15% to 20%) to provide a clean absorbent surface. Saturate surfaces to be acid etched with water prior to application of acid. Vertical surfaces may have a sacked finish. Do not apply a slurry coat of water materials to horizontal concrete deck surfaces that are less than 20 hours old.

4) Use light sandblasting or etching to remove the surface glaze of dense or steel troweled concrete.

5) Abrasive clean and wash construction joints.

310-5.9.3 Application.

1) After completing repairs, apply a top-coat system to the concrete surfaces to be treated, apply after curing and finishes are complete. Application of waterproofing and any point top coatings shall conform to the manufacturers recommended application procedures.

2) The Contractor shall have the manufacturer's representative advise and/or supervise the waterproofing application in person.

3) Apply crystalline waterproofing material to concrete, which has been thoroughly saturated with clean water. Moisten surfaces to be treated prior to application. Remove free water prior to application of waterproofing material.

4) Apply crystalline waterproofing to:

   (a) Interior walls and roof of concrete vaults and manholes. Exterior walls of concrete vaults and manholes.
   (b) Joints of precast concrete manholes as shown on the Plans.
   (c) The interior surfaces shall have a white color and the exterior a gray color.

5) Apply second coat when the first coat has reached an initial set. Use light water spray on surfaces to be coated if rapid drying occurs.

310-5.9.4 Payment. There shall be no separate payment for waterproofing. This cost shall be included in the work to which it is appurtenant.

Add the following Section 313 in its entirety.

SECTION 313 –INSTALLATION OF MISCELLANEOUS POTABLE WATER DISTRIBUTION SYSTEM MATERIALS

313-1 CONNECTIONS TO EXISTING POTABLE WATER MAINS. Connections to the existing water mains shall be made within ten (10) working days of passing disinfection test and shall be as shown on the Plans and in accordance with City of Torrance Standard Plan No. T-723. If the Contractor fails to complete the connections within this time period, the Contractor shall be required to flush the new line weekly through a construction meter per the direction of the Engineer and pay all additional costs of water required for flushing.

In the event that a planned shut down of an existing water main is found necessary, the Contractor shall request approval four (4) days in advance from the Engineer for the time, date, duration and location of proposed shut down. Preparation and distribution of shut down notices shall be the responsibility of the Contractor. Shut down notices shall be reviewed by the Engineer and shall be in the form of a door hanger. These shut down notices shall indicate the time/date/duration/reasons for the shut down. Distribution of shut down notices shall be accomplished by placing said shut down notice on the main entry door of each dwelling unit, businesses, etc. effected by the shut down. All shut down notices shall be distributed (48 hours) 2 days in advance of the shut down.

The limits of this area for distribution of the shut down notice shall be approved by the Engineer prior to beginning the distribution process. Sample of the approved shut down notice will be available at the pre-construction meeting.

Shut down of any existing water mains may have to be performed during off-hours when the water demand is low. The Engineer shall determine the time of day when the shutdown is to be performed.

313-1.1 Payment. There shall be no separate payment for connection to the existing water main. Full compensation for furnishing labor, materials and equipment necessary to complete the connection shall be included in the Contract Unit Price per linear foot of pipe installed.

313-2 INSTALLATION OF VALVES. The size of valves to be installed shall be as shown on the Plans. All buried valves shall have the operating nuts in a vertical position except as otherwise noted. Valve boxes where called for, shall be centered over the operation nuts and shall be set plumb and conform to City of Torrance Standard Plan No. T712.

313-2.1 Payment. Payment for valves shall be per the Contract Unit Price and shall include valve boxes and related appurtenant work.

313-3 INSTALLATION OF AIR AND VACUUM RELEASE VALVES. Air and vacuum release valves shall be installed where shown on the Plans and in accordance with City of Torrance Standard Plan No. T708.

313-3.1 Payment. Payment for air and vacuum release valves shall be per the Contract Unit Price and shall include the service line, ball valve, valve box assembly, air release valve cover, concrete pad and related appurtenant work.

313-4 DISPLACEMENT TYPE - 3/4", 1", 1-1/2" AND 2" COLD WATER METERS. The Contractor shall install 3/4", 1", 1-1/2" and 2" water meters and meter boxes at the locations shown on the Plans and in accordance with City of Torrance Plan Nos. T703 or T704. Existing 2" meters shall be retrofitted with a new ball valve and meter box per City of Torrance Standard Plan No. T707.

313-4.1 Payment. Payment for installation of 3/4", 1", 1-1/2" and 2" water meters and meter boxes shall be per unit per the Contract Unit Price and shall include relocation, driveway repair and all related appurtenant work.

SECTION 314 - RECLAIMED WATER FACILITIES INSTALLATION

314-1 CONNECTION TO EXISTING WBMWD RECLAIMED WATER LINES.

314-1.1 General. All connections to existing West Basin Municipal Water District pipelines shall be made only in the presence of a District representative, and no connection work shall proceed until the District has given notice to proceed. The Contractor shall furnish all pipe, materials, equipment, and labor required to make the connection, as well as assist the District in alleviating any hardships occurred during the shutdown for connections. Standby equipment or materials may be required by the District. The District may postpone or reschedule any shutdown operation if, for any reason, the District believes that the Contractor is improperly prepared with competent personnel, equipment, or materials to proceed with the connection work. If progress is inadequate during the connection operations to complete the connections in the time specified, the District shall order necessary corrective measures. All costs for corrective measures shall be paid by the Contractor. The District will operate all existing valves. The Contractor shall dewater existing mains, as required, in the presence of the District. The Contractor shall be aware that existing valves (if present) may leak and that the installation of connections may be made under wet conditions. All valves, existing and newly installed, shall be readily accessible at all times to the District for emergency operations.

Contractor shall notify the District a minimum of ten (10) working days prior to the date of connection. The Contractor shall be responsible for determining in advance the grade, station, and offset of the existing pipelines prior to laying the last one-hundred (100) feet of the new pipeline. The Contractor, upon approval from the District, shall make necessary cut-to-fit changes, adjusting line and grade as necessary. Where the changes create a high or low point in the pipeline profile, a standard combination air release or blow-off assembly shall be installed if directed by the District. In no event shall the new pipelines be connected to existing facilities until the new pipelines have been successfully pressure tested and flushed.

Installation of all reclaimed water mains and appurtenances shall conform to West Basin Municipal Water District and Central Basin Municipal Water District Design Criteria, Supplemental Standard Specifications, and Standard Drawings for Reclaimed Water Facilities, latest edition, available at 17140 S. Avalon Boulevard, Suite 210, Carson, CA 90746-1296.

314-1.2 Payment. There shall be no separate payment for connection to existing reclaimed water main. Full compensation for furnishing labor, materials and equipment necessary to complete the correction shall be included in the Contract Unit Price per linear foot of pipe installed.

314-2 VALVE INSTALLATIONS.

314-2.1 General. Installation of valves for reclaimed water pipelines shall conform to the following requirements:

1) The type, size and location of valves to be installed shall be as shown on the Plans and City of Torrance Standard Plan No. T806.

2) Valves shall be installed in a level position with the operating stem vertical, except where shown on the Plans.

3) Butterfly valve operators shall be located on the left-hand side of the valve when standing on the flanged end of the valve (at the tree or cross) and looking through the valve toward the pipe end. Otherwise, the operator shall be installed on the street centerline side of the pipeline.

4) Wrap buried valves with two wraps of 8-mil polyethylene wrap per AWWA C105.

5) Valves shall be stabilized and supported separately from the pipeline, as shown on the Plans or on the Standard Plans.

6) Main line and appurtenant valves shall be tested for lead-proof tightness after the main line pressure test, at the test pressure.

7) Valve location ties shall be made by the Contractor and shall be measured from the valve to two locations. One set of Plans shall be marked with the tie locations and dimensions and submitted to the Engineer upon completion of the work.

8) Tie locations shall be a chiseled "V" on the curb or a white 4-inch by 4-inch witness post set at the property line or as required by the Engineer.

314-2.2 Tapping Sleeves and Valves. Tapping valves shall conform to all requirements for gate valves and the additional requirements listed herein. One end of the tapping valve shall have slotted boltholes to fit all standard tapping machines. Seat rings shall be oversized to permit the use of full-size cutters. Tapping sleeves shall be Mueller H615 mechanical joint tapping sleeve, or approved equal. Gaskets shall be Buna-N rubber with a wide cross section. The tapping sleeve shall be installed in accordance with manufacturer's instructions and to the satisfaction of the Engineer. The pipe barrel shall be thoroughly cleaned with a wire brush to provide a smooth, hard surface for the sleeve. The sleeve shall be pressure tested in the presence of the Engineer prior to tapping. Thrust blocks shall be provided at the tapping sleeve.

314-2.3 Valve Box Installations. The Contractor shall install valve boxes at all valve locations, except where shown otherwise on the Plans, in accordance with the following requirements:

1) The Contractor shall install valve box cap and rim, sleeves, and valve operator extensions of the type indicated on City of Torrance Standard Plan No. T806.

2) Operator extensions and sleeves shall be centered and set plumb over the valve operator nut.

3) Operator extensions, where required, shall be fitted with an AWWA 2-inch square operating nut and a tapered socket end for the valve operating nut.

4) Operator extension shaft, nut, socket, and centering guide shall be painted with one coat of zinc chromate primer after fabrication.

5) The valve box caps shall be set flush with finished pavement surface

6) The valve box cap shall be painted with two coats of purple paint according to the requirements of 310-5.8 of the Special Provisions.

314-2.4 Payment. Payment for valves shall be per the Contract Unit Price and shall include valve boxes and related appurtenant work.

314-3 BLOW-OFF ASSEMBLIES. Blow-off assemblies shall be installed in accordance with the following requirements:

1) The Plans shall show the outlet station, size, direction, and location of the outlets.

2) The Contractor shall install blow-off installations at the location shown on the Plans and in accordance with City of Torrance Standard Plan No. T707.

3) The piping between the outlet valve and the riser shall be at a continuous downgrade of not less than 1/4-inch per foot.

4) Where blow-off's are placed in sidewalk areas, the sidewalk shall be saw cut and removed to the nearest score line. The cover shall be set to sidewalk grade and the sidewalk replaced.

5) Where blow-off's are placed in unpaved areas, the cover and rim shall be set at the existing ground surface or as directed by the Engineer.

314-3.1 Payment. Payment for blow-off assemblies shall be per the Contract Unit Price and shall include the service lines, fittings, blow-off hydrants, valve box assemblies, thrust blocks and related appurtenant work.

314-4 AIR RELEASE AND VACUUM VALVE ASSEMBLIES. Air release and vacuum valve assemblies shall be installed in accordance with the following requirements:

1) The Plans shall show the outlet station, size, direction, and location of the combination air valve assembly.

2) The Contractor shall install combination air release and vacuum valve assembly installations at the location shown on the Plans and in accordance with City of Torrance Standard Plan No. T805.

3) The piping between the outlet valve and the ell on the air valve riser shall be at a continuous up grade of 1/4-inch per foot.

4) The long axis of the valve shall be set parallel to the street.

5) The exposed vent pipe and guard posts, where used, shall be painted according to the requirements of 310-5.8 of the Special Provisions.

6) The tap for the combination air valve shall be made in a level section of the pipe no closer than 18-inches to the bell, coupling, joint or fitting.

314-4.1 Payment. Payment for air release and vacuum valve assemblies shall be per the Contract Unit Price and shall include the service line, ball valve, valve box assembly, air release valve cover, concrete pad and related appurtenant work.

314-5 SERVICE INSTALLATIONS. Service laterals for reclaimed water shall be in accordance with the following requirements:

1) The Plans shall indicate the water service station, size, direction, and location of the meter box.

2) The Contractor shall install reclaimed water services at the locations shown on the Plans and in accordance with City of Torrance Standard Plan Nos. T702, T703 and T704 as applicable.

3) The Contractor may open cut or bore service laterals as approved by the Engineer.

4) Splicing of copper for 1-inch services is not allow.

314-6 PRECAST VAULT, MANHOLE AND METER BOX INSTALLATION. Precast vaults, manholes and meter boxes shall be installed in accordance with the following requirements:

1) The Plans or Standard Details shall show the station, location, and size of the installation.

2) The Contractor shall install precast vaults and manholes at the locations shown on the Plans and Standard Details.

3) Reinforcement steel shall be Grade 40 or Grade 60 billet steel conforming to ASTM A-615 and shall be deformed according to ASTM A-305.

4) Concrete for vaults or meter boxes shall use Type II cement, and shall develop a minimum strength of 3,250 psi at 28 days in conformance to ASTM C-150. All course and fine aggregate shall conform to ASTM C-33.

5) Concrete for vault and manhole footings shall be Type II 450-C-2000, and poured against undisturbed or well-compacted soil to the dimensions shown on the Plans or Standard Details.

6) Manholes

   (1) Fill joints between precast sections with dry pack crystalline waterproofing plus an outside gun grade elastomeric sealant. The entire manhole shall be waterproof. After backfilling is completed and dewatering is stopped, the Contractor shall check for any leakage. All leakage shall be repaired by the Contractor.

   (2) Set each precast concrete manhole unit plumb on a bed of drypack cystalline to make a watertight joint at least 1-inch thick with the concrete base or with the preceding unit. Point the inside joint and wipe off the excess sealant. Secure the manhole frame to the grade ring with grout and cement mortar fillet. Backfill and compact and replace pavement.

   (3) Assemble units so that the cover conforms to the elevation determined by the manhole location as follows:

      (1) In Paved Areas: Top of cover shall be furnish with paving surface.
      (2) In Shoulder Areas: Top of cover shall be flush with existing surface where it is In traveled way of shoulder and 0.1 foot above existing surface where outside limits of traveled way but not in the existing roadside ditch.

   (4) Backfill and compact around the manhole per Section 300 and pipe specification Section 306.

7) Coat interior and exterior of manholes and vaults with crystalline waterproofing per 310-5.9 of these Special Provisions. The interior surface of the walls and roof shall be coated white. The exterior walls shall be coated gray.

314-6.1 Payment. There shall be no separate payment for precast vaults, manholes and meter boxes. Full compensation for providing materials, labor and equipment for installation of these items shall be included in the prices bid for the various items of works.

314-7 CONCRETE FOR THRUST BLOCKS, ANCHORS AND PIPE CRADELS. Concrete for thrust blocks, anchors and pipe cradles shall conform to the following requirements:

1) Concrete thrust blocks, anchors, or pipe cradles shall be poured at the locations and with the dimensions shown on City of Torrance Standard Plan No. T713.

2) Concrete shall be placed such that bell ends of fittings shall be available for repairs. Concrete placed over joints shall be removed.

3) Reinforcing steel exposed directly to the soil shall be coated Kopcote Bitumastic No. 50, or approved equal.

314-7.1 Payment. There shall be no separate payment for concrete thrust blocks, anchors, and pipe cradles. Full compensation for providing materials, labor and equipment for the installation of these items shall be included in the prices bid for the various items of work.

Add the following sections.

SECTION 315 - PUMP STATION

315-1 GENERAL.

315-1.1 Section Includes.

A. Site assembled and tested precast wastewater utility pumping stations, including:
   1. Precast concrete wet-well and valve vault;
   2. Pumps and mountings;
   3. Control panel;
   4. Piping/Valves/Fittings integral to pumping station;
   5. Pumping station design services.

315-1.2 Action Submittals.

A. Product Data: Provide manufacturer's technical data including station capacities and operating characteristics;
B. Pump Performance Curves;
C. Shop Drawings: Show fabrication and installation details;
D. Concrete Structural Reinforcement drawings and calculations and buoyancy calculations for concrete structures, stamped and signed by a licensed California professional civil engineer.

315-1.3 Closeout Submittals.

A. Field Reports: Provide quality-control test reports documenting station operation performance;
B. Operation and Maintenance Manual: Include approved submittals and schedule for maintenance requirements. Six (6) hard copies and one electronic copy on a flash drive shall be provided.

315-1.4 Quality Assurance.

A. Manufacturer Qualifications: NPCA-certified plant, with experience and demonstrated capability to produce work specified in this Section;
B. Electrical Components, Devices, and Accessories: Listed and labeled as defined in NFPA 70, Article 100, by a testing agency acceptable to authorities having jurisdiction, and marked for intended use.

315-1.5 Warranty.

A. Manufacturer's Warranty: Manufacturer's standard form in which manufacturer agrees to repair or replace components of pumping stations that fail in materials or workmanship within specified warranty period;
   1. Failures include, but are not limited to, the following:
      a. Structural failures including precast concrete structures, hatches, and other accessories;
      b. Faulty operation of pumps, controls, or pumping and piping system accessories;
      c. Deterioration of metals, metal finishes, and other materials beyond normal use;
   2. Warranty Period for Precast Concrete Structures: One year from date of Substantial Completion.
   3. Warranty Period for Pumps: One year from date of Substantial Completion;

4. Warranty Period for Control Panel: One year from date of Substantial Completion.

315-2 PRODUCTS.

315.2.1 Manufacturer.

A. The Contractor must supply a complete pump station including all of the following:

1. A full submittal package including all parts;
2. A 1-year full system warranty for the entire system that supersedes all vendor warranties;
3. Day of start-up testing provided by an employee of the pump supplier;
4. A start-up report;
5. Operating and Maintenance manuals for the entire system (2 hard copies and 1 electronic copy);
6. Training on operation and maintenance of the system by an employee of the pump supplier;
7. All parts including precast concrete, pumps with auto-coupling system, piping within the wet well and the valve vault, valves, hatches, ladders, and control panel.

An employee of an individual component vendor or manufacturer, or supply company, or service company other than the pump supplier will not be accepted for start-up testing and/or system training.

315.2.2 Precast Concrete Structures.

A. Precast Concrete Valve Vault: ASTM C 890, precast, reinforced concrete;
   1. Base Section: Thickness for floor slab and minimum thickness for walls to be determined by a licensed engineer prior to construction based on loading and buoyancy requirements;
   2. Flexible Resilient Pipe Connectors: ASTM C 923.

315.2.3 Precast Concrete Materials And Mix Design.

A. General: Precast concrete according to ACI 318;
B. Concrete Design Mix: 4,000 psi minimum, with 0.45 maximum water/cementitious materials ratio.

315.2.4 Access Doors and Frames.

A. Wet Well Access Grate: Galvanized steel grate with 2-inch openings, hinged, lockable, incidental traffic loading, nut rails on front and back.
B. Valve Vault Access Door: Aluminum angle frame, multi-door hatch per U.S.F. Fabrication model TH4 84 x 168 aluminum hatch and frame (or approved equal), gasketed, incidental traffic loading, Slamlock with Threaded Plug, Removable Outside Key Fixed inside handle, SS tamperproof hinges.

315.2.5 Wet-Well Accessories.

A. Guide Rail Assembly: Dual guide rail assembly, stainless steel, Type 304, with pump guide brackets configured to match requirements of selected pumps. Single guide rail assembly will not be accepted;
B. Flexible Resilient Pipe Connectors: Flexible connector, ASTM C 923;
C. Liners:
   1. A protective liner shall be used whenever a precast concrete manhole or structure is used in a sanitary or light industrial sewer system in which the potential for corrosive attack to the concrete substrate exists;
   2. The liner shall be the Dura Plate 100 liner as manufactured by A-LOK® Products, Inc., Tullytown, PA or approved equal;
   3. The design of the liner shall provide a corrosion protective barrier permanently embeded to the inside well of the structure.

315.2.5.1 Submersible Wastewater Grinder Pump.

A. SCOPE

Furnish - 1 ABS Model PIR PE2 PE110/2-E-60HZ Submersible Grinder wastewater pump or pre-approved equal. The pump shall be capable of delivering 58.8 U.S. GPM at a total dynamic head of 201.1 feet with a hydraulic efficiency of 24.6%. An additional point on the same curve shall be 78 U.S. GPM at a total dynamic head of 191 feet. Shut off head shall be 235 feet (minimum). The motor shall be an integral part of the pump unit. The motor shall be 14.8 HP connected for operation on a 460 volt, 3 phase, 60 hertz electrical supply service. Pumps are intended for wet pit installation and shall be supplied with a standard cast iron auto-coupling to support the pump. Each pump unit shall be fitted with a stainless steel chain assembly, 15 feet long for lifting the pump. The working load rating of the lifting system shall be a minimum of 50% greater than the pump weight. Each pump motor shall be equipped with 49 feet of power and control cable sized in accordance with NEC and CSA standards.

B. PUMP DESIGN

The heavy duty submersible grinder pump(s) shall be capable of handling raw unscreened sewage and other similar solids-laden fluids without clogging. The pump shall be driven by a Premium Efficiency three phase motor, providing the highest levels of operational reliability and energy efficiency.

C. GUIDE RAIL BASE ASSEMBLY

There shall be no need for personnel to enter the wet well to remove or reinstall the pump(s). In a wet pit installation, the discharge base & elbow assembly shall be permanently installed in the wet well and connected to the discharge piping. In order to prevent binding or separation of the pump from the guide rail system, the pump(s) shall connect to the guide rail base automatically and firmly, guided by one 2 inch guide pipe extending from the base elbow to the top of the station. Systems using guide cable in lieu of rigid guide bars or pipes shall not be considered acceptable. The sliding guide bracket shall be a separate part of the pumping unit.

A field replaceable Nitrile (Buna-N) rubber profile gasket or o-ring shall accomplish positive sealing of the pump flange/guide rail bracket to the discharge elbow. Base assemblies which rely solely on metal to metal contact between the pump flange and discharge base elbow as a means of sealing are inherently leak prone, and shall not be considered equal. No portion of the pump shall bear directly on the floor of the sump. The guide rail system shall be available in an optional non-sparking version, approved by Factory Mutual for use in NEC Class 1, Division 1, Group C&D hazardous locations.

D. VERTICAL PUMP STAND (optional)

As an alternative to a Guide Rail System, the pumps shall be a supported by a vertical pump stand. The stand is bolted to the pump and provides a means to stand the pump on the wet well floor in a vertical position.

E. PUMP CONSTRUCTION

Major pump components shall be of gray cast iron, EN-GJL-250 (ASTM A-48, Class 35B) with smooth surfaces devoid of porosity or other irregularities. All exposed fasteners shall be stainless steel, 1.4401 (AISI type 316) construction. All metal surfaces coming into contact with the pumped media (other than the stainless steel components) shall be protected by a factory applied spray coating of zinc phosphate primer followed by a high solids two part epoxy paint finish on the exterior of the pump. The pump shall be equipped with an open lifting hoop suitable for attachment of standard chain fittings, or for hooking from the wet well surface. The hoop shall be stainless steel, 1.4401 (AISI 316), and shall be rated to lift a minimum of four times the pump weight.

Sealing design for the pump/motor assembly shall incorporate machined surfaces fitted with Nitrile (Buna-N) rubber O-rings. Sealing will be the result of controlled compression of rubber O-rings in two planes of the sealing interface. Housing interfaces shall meet with metal to metal contact

between machined surfaces, and sealing shall be accomplished without requiring a specific torque on the securing fasteners. Rectangular cross sectioned gaskets requiring specific torque limits to achieve compression shall not be considered equal. No secondary sealing compounds shall be required or used.

F. GRINDER MECHANISM:

The grinder mechanism shall consist of two circular, hardened cutter elements, one rotating and one stationary. The cutter material shall be similar to an AISI 440C stainless steel with the addition of cobalt, vanadium, and molybdenum for superior abrasion resistance and a hardness of Rockwell C 58-62. The rotating element shall be secured to the end of the pump shaft directly below the impeller by a stainless steel bolt which is mechanically prevented from loosening by a positively engaged ratcheting washer assembly. It shall be keyed to the impeller so that it rotates with the motor. The head of the securing bolt shall be effectively recessed within the cutter element bore to prevent disruption of the flow stream and catching of solid material in the wastewater.

The stationary element shall be secured to the Self Cleaning Wear Plate and positioned so that it is concentric to and aligned with the rotating element. Both elements shall incorporate a sinusoidal wave pattern at the grinding interface to create a shearing and cutting action between the elements as the rotating cutter spins. The rotating cutter shall incorporate an integrated solids deflector to prevent items such as plastic bags from covering the grinder assembly and starving the pump. All wastewater being pumped by the impeller shall be drawn through the grinder mechanism by the natural suction of the pump impeller and reduced to a particle size approximately 1/8 inch. The grinder mechanism shall not require routine adjustments throughout the life of the grinder assembly.

Impeller:

The impeller shall be a semi open multi vane design with a solids passage size sufficient to prevent clogging on the wastewater material that has passed through the integrated grinder assembly. The impeller material shall be gray cast iron, EN-GJL-250 (ASTM A-48, Class 35B). The impeller shall have a slip fit onto the motor shaft and drive key, and shall be securely fastened to the shaft by a stainless steel bolt which also holds the rotating cutter element. The impeller shall be dynamically balanced to the ISO 10816 standard to provide smooth vibration free operation.

Self Cleaning Wear Plate:

The ABS ContraBlock style wear plate shall be constructed from gray cast iron, EN-GJL-250 (ASTM A-48, Class 35B). The wear plate shall be designed to hold and secure the stationary cutter firmly in place, concentric to the rotating cutter. The impeller side of the wear plate shall incorporate an outwardly spiraling V-shaped groove to shred and force stringy solids outward from the impeller and through the pump discharge. The wear plate shall be mounted to the volute with four stainless steel securing screws and four stainless steel adjusting screws to permit close tolerance adjustment between the wear plate and impeller for maximum pump efficiency. Adjustment to allow for wear and to restore peak pumping performance shall be easily accomplished in the field utilizing standard tools, and without requiring disassembly of the pump. The use of fixed or non-adjustable wear plates or rings, or systems that require disassembly of the pump or shimming of the impeller to facilitate adjustment shall not be considered equal.

Pump Volute:

The pump volute shall be single piece gray cast iron, EN-GJL-250 (ASTM A-48, Class 35B) non-concentric design with centerline discharge. Passages shall be smooth and large enough to pass any solids which may enter the impeller. Discharge size shall be 2 inch. The discharge flange design shall permit attachment to the ABS guide rail system, and shall also accept 2" ANSI class 125 flanged fittings. The minimum working pressure of the volute and pump assembly shall be 10 bar (145 psi).

G. PREMIUM EFFICIENCY MOTOR

The Premium Efficiency motor shall meet efficiency standards in accordance with IEC 60034-30, level IE3 and NEMA Premium*. Motor rating tests shall be conducted in accordance with IEC 60034-

2-1 requirements and shall be certified accurate and correct by a third party certifying agency. A certificate shall be available upon request.
* IE3 and NEMA Premium efficiency levels are equivalent, however the NEMA Premium standard is intended to cover dry installed motors only, not integrated submersible motors.

The Premium Efficiency motor shall be housed in a water tight gray cast iron, EN-GJL-250 (ASTM A-48, Class 35B) enclosure capable of continuous submerged operation underwater to a depth of 20 meters (65 feet), and shall have an IP68 protection rating. The motor shall be of the squirrel-cage induction design, NEMA type B, Premium Efficiency. The copper stator windings shall be insulated with moisture resistant Class H insulation materials, rated for 180oC (356oF). The stator shall be press fitted into the stator housing. The use of bolts, pins or other fastening devices requiring penetration of the stator housing is unacceptable. The rotor bars and short circuit rings shall be made of cast aluminum.

The motor shall be designed for continuous duty. The maximum continuous temperature of the pumped liquid shall be 40oC (104oF), and intermittently up to 50oC (122oF). The motor shall be capable of handling up to 15 evenly spaced starts per hour without overheating. The service factor (as defined by the NEMA MG1 standard) shall be a minimum of 1.2. The motor shall have a voltage tolerance of +/- 10% from nominal, and a phase to phase voltage imbalance tolerance of 1%. The motor shall be FM and CSA approved for use in NEC Class I, Division I, Groups C & D hazardous locations. The surface temperature rating shall be T3C.

The motor shall be capable of operating completely submerged, at full rated power continuously without the need for de-rating or reduced duty cycle. It shall be self cooling via the process fluid surrounding the motor. The motor shall have a NEMA Class A temperature rise

Thermal Protection: Each phase of the motor shall contain a normally closed bi-metallic temperature monitor switch imbedded in the motor windings. These thermal switches shall be connected in series and set to open at 140oC +/- 5oC (284oF). They shall be connected to the control panel, and used in conjunction with, and supplemental to, external motor overload protection.

Mechanical Seals:
Each pump shall be equipped with a tandem mechanical shaft seal system consisting of two totally independent seal assemblies. The seals shall operate in a lubricant reservoir that hydro-dynamically lubricates the lapped seal faces at a constant rate. The lower, primary seal unit, located between the pump and the lubricant chamber, shall contain one stationary industrial duty silicon-carbide seal ring and one rotating industrial duty silicon-carbide seal ring. The stationary ring of the primary seal shall be installed in a seal holding plate of gray cast iron EN-GJL-250 (ASTM A-48, Class 35B). The seal holding plate shall be equipped with swirl disruption ribs to prevent abrasive material from prematurely wearing the seal plate. The upper, secondary seal unit, located between the lubricant chamber and motor housing, shall contain one stationary industrial duty silicon-carbide seal ring, and one rotating one rotating industrial duty silicon-carbide seal ring. Each seal interface shall be held in contact by its own spring system. The seals shall not require routine maintenance, or adjustment, and shall not be dependent on the direction of rotation for proper sealing. Each pump shall be provided with a lubricant chamber for the shaft sealing system which shall provide superior heat transfer and maximum seal cooling. The lubricant chamber shall be designed to prevent overfilling, and to provide lubricant expansion capacity. The drain and inspection plug shall have a positive anti-leak seal, and shall be easily accessible from the outside of the pump. The seal system shall not rely upon the pumped media for lubrication and shall not be damaged when the pump is run dry. Lubricant in the chamber shall be environmentally safe non toxic material.

The following seal types shall not be considered equal: Seals of proprietary design, or seals manufactured by other than major independent seal manufacturing companies. Seals requiring set screws, pins, or other mechanical locking devices to hold the seal in place, conventional double mechanical seals containing either a common single or double spring acting between the upper and lower seal faces, any system requiring a pressure differential to seat the seal and ensure sealing.

H. Mechanical Seal Protection System:

The primary mechanical seal shall be protected from interference by particles in the waste water, including fibrous materials, by an active Seal Protection System integrated into the impeller and volute, and by the grinder mechanism ahead of the impeller. The back side of the impeller shall be equipped with pump out vanes to eject any fibrous material that attempts to lodge behind the impeller. The volute housing adjacent to the back side pumping vanes of the impeller shall incorporate an outward spiraling groove as described in the "Self Cleaning Wear Plate" section above, to eject solid materials from the mechanical seal area. Fibrous material which attempts to lodge behind the impeller, or wrap around the mechanical seal shall be effectively ejected by the system preventing interference with the mechanical seal. The Seal Protection System shall operate whenever the pump operates, and shall not require adjustment or maintenance in order to function. Grinder pump designs which do not incorporate an active system to protect the primary mechanical seal shall not be considered acceptable for wastewater service.

Seal Failure Early Warning System:

The integrity of the mechanical seal system shall be continuously monitored during pump operation and standby time. An electrical probe shall be provided in a sensing chamber positioned between the primary and secondary mechanical seals for detecting the presence of water contamination within the chamber. The sensing chamber shall be filled with environmentally safe non toxic oil. A solid-state relay mounted in the pump control panel or in a separate enclosure shall send a low voltage, low amperage signal to the probe, continuously monitoring the conductivity of the liquid in the sensing chamber. If sufficient water enters the sensing chamber through the primary mechanical seal, the probe shall sense the increase in conductivity and signal the solid state relay in the control panel. The relay shall then energize a warning light on the control panel, or optionally, cause the pump shut down. This system shall provide an early warning of mechanical seal leakage, thereby preventing damage to the submersible pump, and allowing scheduled rather than emergency maintenance. Systems utilizing float switches or any other monitoring devices located in the stator housing rather than in a sensing chamber between the mechanical seals are not considered to be early warning systems, and shall not be considered equal.

Shaft:

The pump shaft and motor shaft shall be an integral, one piece unit adequately designed to meet the maximum torque required at any normal start-up condition or operating point in the system. The shaft shall have a full shutoff head design safety factor of 1.7, and the maximum shaft deflection shall not exceed .05 mm (.002 inch) at the lower seal during normal pump operation. Each shaft shall be stainless steel 1.4021 (AISI 420) material, and shall have a polished finish with accurately machined shoulders to accommodate bearings, seals and impeller. Carbon steel, chrome plated, or multi piece welded shafts shall not be considered adequate or equal.

Bearings:

Each pump shaft shall rotate on high quality permanently lubricated, greased bearings. The upper bearing shall be a deep grooved ball bearing and the lower bearings shall be a heavy duty double row angular contact ball bearing. Bearings shall be of sufficient size and properly spaced to transfer all radial and axial loads to the pump housing and minimize shaft deflection. L-10 bearing life shall be a minimum of 50,000 hours at flows ranging from ½ of BEP flow to 1.2 times BEP flow (BEP is best efficiency point). The bearings shall be manufactured by a major internationally known manufacturer of high quality bearings, and shall be stamped with the manufacturer's name and size designation on the race. Generic or unbranded bearings from other than major bearing manufacturers shall not be considered acceptable.

Power Cable:

The power cables shall be sized according to NEC and CSA standards and shall be of sufficient length to reach the junction box without requiring splices. The outer jacket of the cable shall be oil and water resistant, and shall be capable of continuous submerged operation underwater to a depth of 65 feet.

Cable Entry System:
The cable entry system shall consist of submersible plug assembly which allows the cable be easily disconnected from the pump for service or replacement. Cable sealing shall be accomplished by a Nitrile compression grommet with both cylindrical and conical sealing surfaces, flanked by a stainless steel washer and an integrated strain relief. A brass (C3604) compression nut shall be threaded into to the cast iron EN-GJL-250 (ASTM A-48, Class 35B) cable plug housing, compressing the grommet ID to the cable while the grommet OD seals against the bore of the cable entry housing. Cable conductors shall be terminated in copper pin connectors which are separated and retained by a circular pin retainer fabricated from high dielectric strength Polyamid (30% GF). Each pin shall pass through its own hole in the pin retainer, maintaining perfect alignment with the mating pins in the motor body. The corresponding motor body pin assembly shall be manufactured from high dielectric strength Polyamid (30% GF), with copper connector pins. The pin assembly shall be sealed with an o-ring to prevent water entry into the motor, and retained in the motor housing bore via a retaining ring. Attachment of the plug assembly to the motor shall engage the corresponding copper pins, creating a complete circuit between the motor and cable. The plug assembly shall be fastened with stainless steel fasteners, and shall be sealed by an o-ring.

The cable plug and sealed entry system as part of the motor shall be FM and CSA approved for use in NEC Class I, Division I, Groups C & D hazardous locations. The system shall be anti wicking by design, and shall prevent any water that enters the cable through damage to the jacket from entering the motor. Cable entry designs which utilize potting compounds to provide a water tight seal, or those which do not allow the cable to be easily changed in the field shall not be considered equal.

315.2.6 Pump Station Controls.

A. CONTROL SEQUENCE OF OPERATION
The system shall ultimately use three alternating VFDs. The Orenco LS Controller shall monitor and control the pumps using a pressure transducer and one back-up float switches. A local color touchscreen interface is provided for system status, data and parameter adjustment.

B. Control Panel
Complying with UL 698A, with weatherproof enclosure, covered compartments sized to accommodate controllers, circuit breakers, transformers, alternators, and programmable logic controller. Basis of Design Product: Orenco Systems, Inc., OLS Custom Panel;
1. NEMA 3R Steel Enclosure w/Cooling Fan & Heater;
2. Orenco LS Controller;
3. Color Touchscreen HMI;
4. 460VAC Variable Frequency Drive For Each Pump;
5. Motor Circuit Breaker For Each Pump;
6. Main Circuit Breaker;
7. Control Transformer With Primary Fusing;
8. Controls Circuit Breaker;
9. HOA Switches (one per pump);
10. Temperature Sensor Input Terminals;
11. Seal Fail Sensors (one per pump);
12. 80db Audible Alarm with Push-to-Silence;
13. Flashing Alarm Beacon Light;
14. Control Relay For Remote Alarm Dry Contact;
15. Terminal Blocks as required;
16. UL698a Listed.

C. LEVEL CONTROL SYSTEM

Shall be a pressure transducer with 1 back up floats. The pressure transducer shall be Keller America Level Rat or Pre-approved Equal. The back-up float shall be an internally weighted non-mercury spdt float.

315.2.7 Piping And Valves.

A. DUCTILE-IRON, MECHANICAL-JOINT PIPE AND FITTINGS
   1. Ductile-Iron Pipe: AWWA C151/A21.51, with mechanical-joint bell and plain spigot end unless flanged ends are indicated;
      a. Provide flanged ends within well and vault. All flanged fittings are to have stainless steel hardware;
   2. Ductile-Iron Fittings: AWWA C110/A21.10, mechanical-joint, ductile- or gray-iron standard pattern or AWWA C153/A21.53, ductile-iron compact pattern;
   3. Glands, Gaskets, and Bolts: AWWA C111/A21.11, ductile- or gray-iron glands, rubber gaskets, and stainless steel bolts;
   4. Application: Buried service between well and vault.

B. SWING CHECK VALVES
   The valve body and cover shall be constructed of ASTM A536 Grade 65-45-12 ductile iron VAL-MATIC SWINGFLEX CHECK VALVE or Pre-approved Equal.

C. ECCENTRIC PLUG VALVES
   The valve body and cover shall be constructed of ASTM A126 Class B cast iron for working pressures up to 175 psig Direct and 100 Reverse. The words "SEAT END" shall be cast on the exterior of the body seat end. VAL-MATIC CAM-CENTRIC PLUG VALVE w/ Handwheel or pre-approved equal.

315.3 EXECUTION.

315.3.1 Precast Concrete Structures.

A. Install precast concrete structure sections with sealants per ASTM C 891.

315.3.2 Field Quality Control.

A. Perform tests and inspections and prepare test reports;
   1. Manufacturer's Field Service: Engage a pump station manufacturer's authorized service representative to assist in testing and startup;
B. Tests and Inspections:
   1. Test completed piping systems according to requirements of authorities having jurisdiction. Submit reports;
   2. After installing wastewater pumping stations and after electrical circuitry has been energized, test pumps and controls for compliance with requirements;
   3. After electrical circuitry has been energized, start units to confirm the station can run at pre-specified design parameters;
   4. Test piping for leaks and defects;
   5. Test and adjust controls and safeties;
C. Remove and replace components of the wastewater pumping stations that do not pass tests and inspections and retest as specified above.

SECTION G
FEDERAL WAGE RATES FOR LOS ANGELES COUNTY

Construction of this project will be financed, in part, with Federal funds. Accordingly, the successful Contractor shall refer to and compensate its employees at the minimum federal wage rates. In July 2009, a new Office Bulletin (DLA-OB 09-03 - Using the Internet for Federal Wage Rates) was posted on the State's Local Assistance "Publications" website at http://www.dot.ca.gov/hq/LocalPrograms/public.htm

During the advertising period, the applicable federal wage rates no longer need to be physically included in the advertising package for local agency Federal-aid contracts. However if not physically included in the advertising package, the applicable federal wage rates must be referenced with an Internet Website address where they can be found.

The City of Torrance hereby notifies prospective bidders that the applicable federal wage rates for this project can be found at **http://www.dot.ca.gov/hq/esc/oe/federal-wages/**

Any revisions to the applicable federal wage rates, up to 10 days before bid opening, shall be identified by the issuance of an addendum with the corresponding Internet Website address of where the revisions can be found.

Impacts:
This Office Bulletin supersedes Chapter 12, Section 12.9 (Federal Wage Rates), Exhibit 12-D (PS&E Checklist), and Exhibit 12-E (PS&E Checklist Instructions) of the Local Assistance Procedures Manual.

During the bid phase, the Project Engineer must checking the website to determine if the federal rates have changed subsequent to advertising for bid. If the rates change up to 10 days prior to the bid opening, the project engineer must prepare an Addendum and issue notice of the new federal minimum rates.

APPENDIX I

CITY OF TORRANCE PERMIT AND BUSINESS LICENSE

City of Torrance, Community Development Department

Permit Application Form

3031 TORRANCE BLVD • TORRANCE, CA 90503

OWNER/APPLICANT INFORMATION

Name: _____

Address: _____

City/State: _____

Zip: _____

Phone: _____

Evacuation permits will not be issued without USA I.D. number.

Underground Service Alert
Call 1-800/227-2600

USA I.D. #: _____

CONTRACTOR INFORMATION ON FILE

_____

_____

_____

_____

_____

State License # _____

Class _____ Exp. Date _____

City Business# _____

Workers Comp # _____

Exp. Date: _____

JOB LOCATION/ADDRESS

(or closest street address)

Please list cross streets _____

_____

DESCRIPTION OF WORK

_____

_____

Lin/Ft Trench _____ Width of Trench _____ Lin/Ft Curb & Gutter _____

Lin/Ft Bore _____ Sewer Connection _____ Number of Curb Drains _____

Sq/Ft Asphalt _____ Sq/Ft Concrete _____ Sq/Ft Dirt _____

Work Order Number *(for utility companies)*: _____

Applicant or Authorized Signature: _____

For further permit information, please call 310/618-5898 or Fax 310/618-2846

Please call the Business License Office at 310-618-5923 for fee amounts. Payment must be submitted with your application.

FOR OFFICIAL USE ONLY

1. LICENSE NO | 2. CATEGORY NO

HOME OCCUPATION | HEALTH PERMIT | S.I.C. CODE

City of Torrance, Revenue Division

Business License Application

3031 Torrance Boulevard, Torrance, California 90503 • 310/618-5828

PART I. APPLICANT TO ANSWER ALL QUESTIONS IN THIS SECTION (print or type)

1. BUSINESS NAME OR DBA | 4. CORPORATE NAME IF DIFFERENT FROM ABOVE

5. BUSINESS ADDRESS | SUITE # | CITY | STATE | ZIP

6. MAILING ADDRESS | SUITE # | CITY | STATE | ZIP

7. NATURE OF BUSINESS (state type of business being conducted at this location) | 8. NO. OF PERSONS WORKING AT LOCATION | 9. BUSINESS PHONE

10. NAME OF PERSON MAKING APPLICATION (must be an owner, partner or corporate officer) | 11. TITLE | 12. HOME PHONE

13. RESIDENCE ADDRESS | CITY | STATE | ZIP | 14. DRIVER'S LICENSE NO | 15. STATE SALES TAX NO

16. STATE CONTRACTOR'S LICENSE NO | 17. SQUARE FOOTAGE | 18. SOCIAL SECURITY NO | 19. FEIN NO | 20. SEIN NO

21. OWNERSHIP INFORMATION ☐ PARTNERSHIP ☐ CORPORATION ☐ SOLE OWNERSHIP

NAMES OF OWNER, PARTNERS, OR PRINCIPAL OFFICERS	TITLE	HOME ADDRESS	HOME PHONE

I declare that I am the owner, partner, corporate officer or person with the power of attorney, and I understand if all the information provided above is not the true the business license being applied for may be revoked as outlined in section 31.5.10 of the Torrance Municipal Code.

I am duly authorized to make this application and all of the information provided in this application is true and correct. The business will not provide any service, good or product which is illegal under Federal, State, or Local Laws. I declare under penalty of perjury that the foregoing is true and correct.

SIGNATURE _____ DATE _____

PART II. FOR OFFICIAL USE ONLY

BASIC FEE	APPLICATION SENT FOR ZONING? ☐ YES ☐ NO	PROCESSING FEE	FIRE INSP. FEE	OTHER
PER PERSON FEE	OTHER (specify)			
PENALTY FEE	HOLD ☐ YES ☐ NO	EMT FEE	CANCELLATION FEE	
RECEIVED BY	DATE	CHECK NO	BANK NO	CASH	TOTAL AMOUNT $

This form can be printed from our website at http://www.torrnet.com/416.htm.

APPENDIX II

CITY OF TORRANCE STANDARD PLANS

STORM DRAIN GENERAL NOTES

1 ALL WORK SHALL BE DONE IN ACCORDANCE WITH THE STANDARD SPECIFICATIONS FOR PUBLIC WORKS CONSTRUCTION, LATEST EDITION AND SUPPLEMENTS THEREO, AS WRITTEN AND PROMULGATED BY PUBLIC WORKS STANDARDS, INC., HEREINAFTER REFERRED TO AS THE STANDARD SPECIFICATIONS, THE TORRANCE STANDARDS, AND TO THE SATISFACTION OF THE COMMUNITY DEVELOPMENT OR PUBLIC WORKS DIRECTOR.

2. IT SHALL BE THE RESPONSIBILITY OF THE CONTRACTOR TO LOCATE, VERIFY DEPTH AND PROTECT ALL STRUCTURES, INCLUDING SUBSTRUCTURES, SHOWN ON THE PLAN. THE CONTRACTOR SHALL BEAR THE ENTIRE COST OF REPAIRING OR REPLACING ANY OF SAID STRUCTURES DAMAGED BY HIM/HER DURING PROSECUTION OF THE WORK. ALL REPAIRS AND REPLACEMENTS SHALL BE DONE IN THE PRESENCE OF THE INSPECTOR. ALL LOCATIONS SHOWN ON THE PLAN FOR UTILITY LINES HAVE BEEN TAKEN FROM AVAILABLE RECORDS AND THEIR COMPLETENESS AND CORRECTNESS ARE IN NO WAY GUARANTEED

3 THE CONTRACTOR SHALL NOTIFY UNDERGROUND SERVICE ALERT (USA) AT 1-800-227-2600 AND ALL PUBLIC UTILITY COMPANIES AND OWNERS OF PRIVATE FACILITIES WITHIN THE AREA OF CONSTRUCTION AT LEAST 2 WORKING DAYS IN ADVANCE OF PERFORMING ANY WORK WITHIN SAID AREA.

4 THE CONTRACTOR SHALL OBTAIN ALL NECESSARY PERMITS FROM THE CITY BEFORE COMMENCING WORK. TRAFFIC CONTROL WITHIN PUBLIC STREET RIGHTS OF WAY SHALL BE IN CONFORMANCE WITH THE CALIFORNIA MUTCD MANUAL OR CITY OF TORRANCE STANDARDS FOR TRAFFIC CONTROL, LATEST EDITION THE CONTRACTOR SHALL PROVIDE A 24-HOUR TELEPHONE NUMBER FOR EMERGENCY REPAIRS TO TRAFFIC CONTROL AND PAVEMENT MARKINGS

5. CAUTION: REVIEW APPROVED CONSTRUCTION PLAN. IF CONSTRUCTION REQUIRES WORKERS AND/OR EQUIPMENT TO BE WITHIN 6 FEET OR CRANES OR HOISTING DEVICES TO BE WITHIN 10 FEET OF OVERHEAD ELECTRIC LINES, CALL SOUTHERN CALIFORNIA EDISON CO. AT 310-783-9336.

6 PRIOR TO COMMENCEMENT OF WORK, ALL SURVEY MONUMENTS IN THE PROJECT AREA SHALL BE LOCATED AND TIED OUT ALL CENTERLINE MONUMENTS OR TIES LOST OR DESTROYED BY THIS WORK SHALL BE REPLACED EITHER BY A LICENSED SURVEYOR OR A CIVIL ENGINEER REGISTERED PRIOR TO JANUARY 1, 1982 AND NEW TIE SHEETS PROVIDED METHOD OF ESTABLISHMENT SHALL BE STATED ON THE TIE SHEET

7 GRADE SHEETS PREPARED AND STAMPED BY A LICENSED ENGINEER OR SURVEYOR SHALL BE DELIVERED TO THE INSPECTOR 24 HRS PRIOR TO COMMENCEMENT OF WORK

8 THE CONTRACTOR SHALL NOTIFY THE PUBLIC WORKS DEPARTMENT AT 310-781-6900 PRIOR TO TRIMMING, REMOVING OR RELOCATING ANY EXISTING STREET TREES.

9 UNLESS OTHERWISE SHOWN, ALL TRAFFIC SIGNS SHALL BE RELOCATED OR REMOVED BY THE CONTRACTOR. THE CONTRACTOR SHALL NOTIFY THE PUBLIC WORKS DEPARTMENT AT 310-781-6900 AT LEAST 2 WORKING DAYS IN ADVANCE OF THE WORK

10 STORM DRAIN CONNECTIONS TO THE L.A. COUNTY STORM DRAIN SYSTEM REQUIRE A PERMIT FROM L.A. COUNTY (1-626-458-3129) BEFORE ISSUANCE OF A CITY PERMIT.

11 IN CASE OF CONFLICT BETWEEN A CONNECTOR PIPE AND AN EXISTING UNDERGROUND LINE, THE CONNECTOR PIPE MAY BE REALIGNED OVER OR UNDER THE CONFLICTING LINE. CONNECTOR PIPE GRADES SHALL DRAIN POSITIVELY TOWARD THE MAIN LINE, AND WHERE GRADE BREAKS EXCEED FIVE DEGREES A CONCRETE COLLAR PER A.P.W.A. STD. DRAWING 380 SHALL BE CONSTRUCTED APPROVAL FOR REALIGNMENT SHALL BE OBTAINED FROM THE COMMUNITY DEVELOPMENT/PUBLIC WORKS DIRECTOR PRIOR TO COMMENCEMENT OF WORK.

12 TRENCHES CUT INTO AN EXISTING ROADWAY WITHIN THE PUBLIC RIGHT OF WAY SHALL BE BACKFILLED AND PAVED AS PER TORRANCE STANDARD T116

CITY OF TORRANCE

DATE ISSUED	**STORM DRAIN GENERAL NOTES**	STANDARD NO
02 JUL 2008	ROBERT J. BESTE PUBLIC WORKS DIRECTOR R.C.E. NO. 50737	**T300**
		SHEET 1 OF 2

TT\T300

STORM DRAIN GENERAL NOTES (CON'T)

13. MANHOLE AND CATCH BASIN COVERS SHALL BE CAST WITH THE WORDS "TORRANCE DRAIN" FOR CITY MAINTAINED LINES AND "PRIVATE DRAIN" FOR PRIVATELY MAINTAINED LINES.

14. DURING NON-CONSTRUCTION HOURS, ALL EXCAVATIONS MUST BE APPROPRIATELY SHORED, PLATED OR BACKFILLED EXCEPT BORE PITS WHICH SHALL BE SECURED WITH K-RAIL AND 6' HIGH CHAIN LINK FENCE PANELS SECURED IN PLACE TO THE SATISFACTION OF THE PUBLIC WORKS INSPECTOR. STEEL PLATES SHALL BE TACK WELDED, PINNED AND/OR SECURED IN PLACE BY ANOTHER METHOD APPROVED BY THE INSPECTOR.

15. THE CONTRACTOR SHALL MAKE AVAILABLE FOR THE INSPECTOR'S REVIEW, ON A DAILY BASIS, AS-BUILT DRAWINGS FOR WORK PERFORMED UP TO AND INCLUDING THE PREVIOUS DAY'S ACTIVITIES. WORK SHALL NOT BE CONSIDERED AS COMPLETE UNTIL AS-BUILT DRAWINGS ARE SUBMITTED TO AND ACCEPTED BY THE COMMUNITY DEVELOPMENT DIRECTOR.

CITY OF TORRANCE

DATE ISSUED	**STORM DRAIN GENERAL NOTES**	STANDARD NO.
02 JUL 2008	ROBERT J. BESTE PUBLIC WORKS DIRECTOR R.C.E. NO. 50737	**T300**
		SHEET 2 OF 2

T:\T300

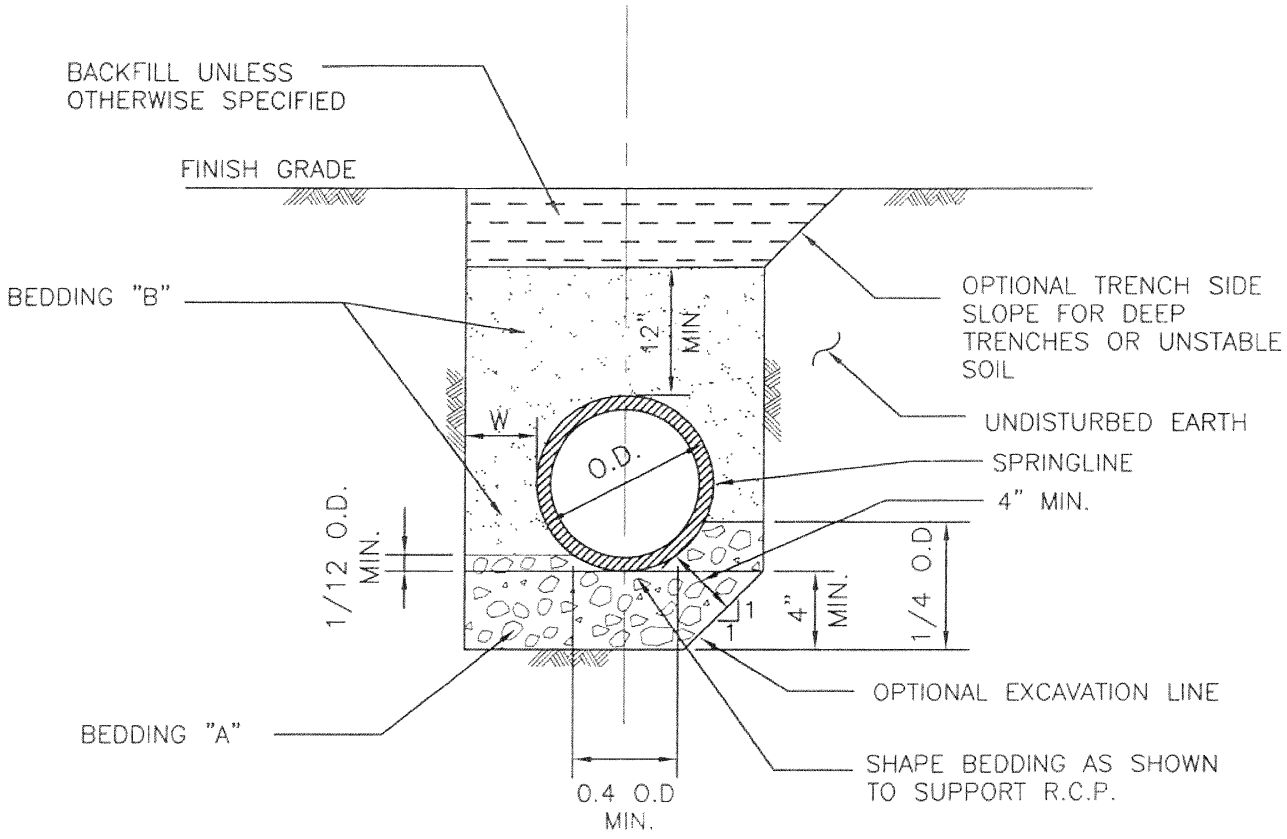

1. BEDDING "A" SHALL BE COMPOSED OF EITHER SAND, NO. 3 OR NO. 4 CRUSHED ROCK OR GRAVEL PER STANDARD SPECIFICATIONS. OTHER GRANULAR MATERIAL WITH A SAND EQUIVALENT OF 30 OR GREATER MAY BE USED WHEN APPROVED BY THE COMMUNITY DEVELOPMENT/PUBLIC WORKS DIRECTOR

2. BEDDING "B" SHALL BE COMPOSED OF SAND OR OTHER GRANULAR MATERIAL WITH A SAND EQUIVALENT OF 30 OR GREATER AS APPROVED BY THE COMMUNITY DEVELOPMENT/PUBLIC WORKS DIRECTOR AND SHALL CONFORM TO SECTION 306-1.2.1 OF THE STANDARD SPECIFICATIONS, EXCEPT BEDDING FOR PLASTIC PIPE SHOULD CONFORM TO SECTION 306-1.2.13.

3. BEDDING "B" SHALL BE COMPACTED TO A RELATIVE COMPACTION OF NOT LESS THAN 90 PERCENT UNLESS OTHERWISE SPECIFIED.

4. BEDDING "B" SHALL BE PLACED IN TWO OR MORE LIFTS FOR PIPES WITH AN O.D. GREATER THAN 60 INCHES.

CITY OF TORRANCE

DATE ISSUED	**BEDDING FOR STORM DRAIN**	STANDARD NO.
02 JUL 2008	ROBERT J. BESTE PUBLIC WORKS DIRECTOR R.C.E. NO. 50737	**T302**
		SHEET 1 OF 2

TT\T302

5. BACKFILL SHALL BE PER SECTION 306-1.3 OF THE STANDARD SPECIFICATIONS.

6. WHERE THE COVER IS 8 FEET OR LESS, "W" MUST BE A MINIMUM OF 6 INCHES. WHERE THE COVER IS GREATER THAN 8 FEET, "W" MUST BE BETWEEN 6 AND 10 INCHES INCLUSIVE FOR PIPES UP TO AND INCLUDING 96 INCHES IN DIAMETER. FOR PIPES OVER 96 INCHES IN DIAMETER, "W" MUST BE BETWEEN 6 AND 12 INCHES INCLUSIVE.

7. "W" SHALL INCLUDE THE THICKNESS OF ANY SHORING.

8. SHORING SHALL BE A MINIMUM OF 6 INCHES FROM THE PIPE AT SPRINGLINE.

CITY OF TORRANCE

DATE ISSUED	**BEDDING FOR STORM DRAIN**	STANDARD NO.
02 JUL 2008		**T302**
	ROBERT J. BESTE PUBLIC WORKS DIRECTOR R.C.E. NO. 50737	SHEET 2 OF 2

TT\T302

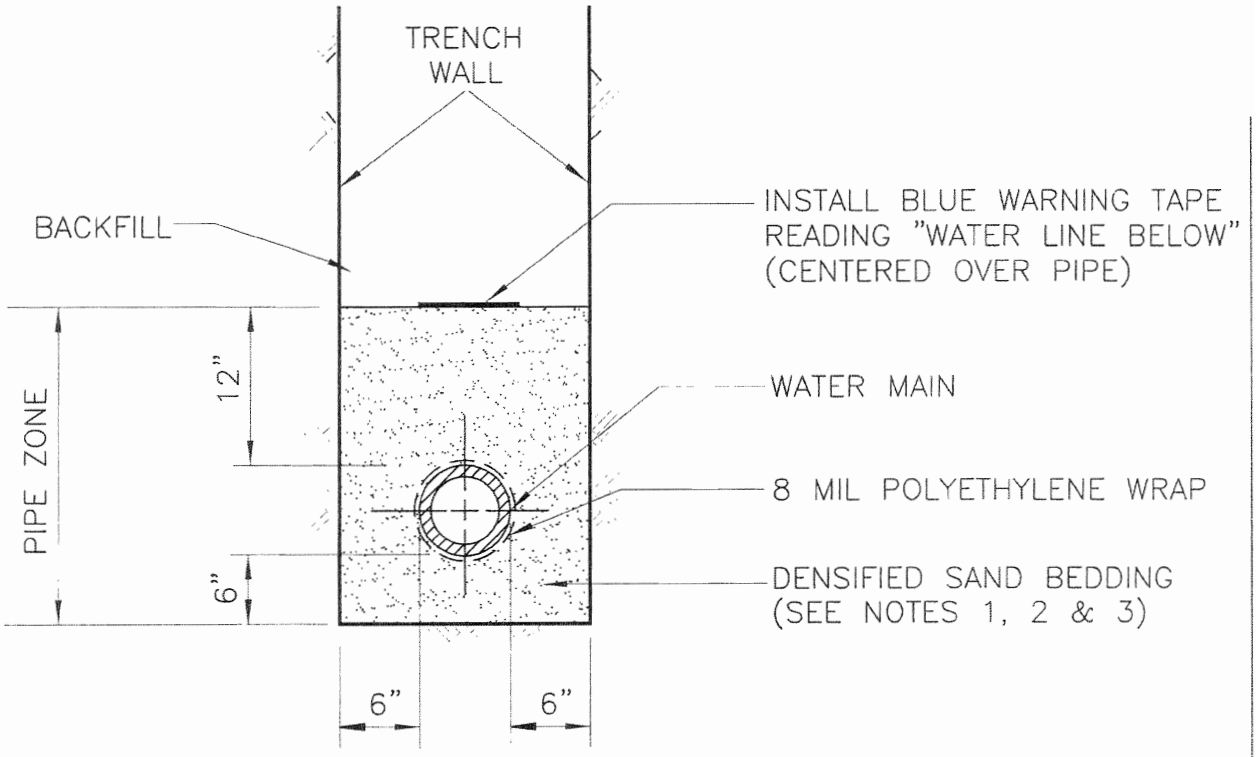

NOTES:

1. SAND BEDDING SHALL CONFORM TO SECTIONS 200-1.5.3 AND 200-1.5.5 OF THE STANDARD SPECIFICATIONS FOR PUBLIC WORKS CONSTRUCTION (LATEST EDITION).
2. DENSIFICATION OF BEDDING SHALL BE ACCOMPLISHED IN CONFORMANCE WITH 306-1.2.1 OF THE STANDARD SPECIFICATIONS FOR PUBLIC WORKS CONSTRUCTION (LATEST EDITION).
3. BEDDING SHALL BE COMPACTED TO 95% OF MAXIMUM DENSITY UNDER STRUCTURES AND 90% ELSEWHERE.

ACCOMPANYING STD.'S T700 AND T116

CITY OF TORRANCE

DATE ISSUED	BEDDING FOR WATER PIPE	STANDARD NO
JAN 2011	ROBERT J. BESTE PUBLIC WORKS DIRECTOR R.C.E. NO. 50737	T 701
		SHEET 1 OF 1

DV/EM/T701-1

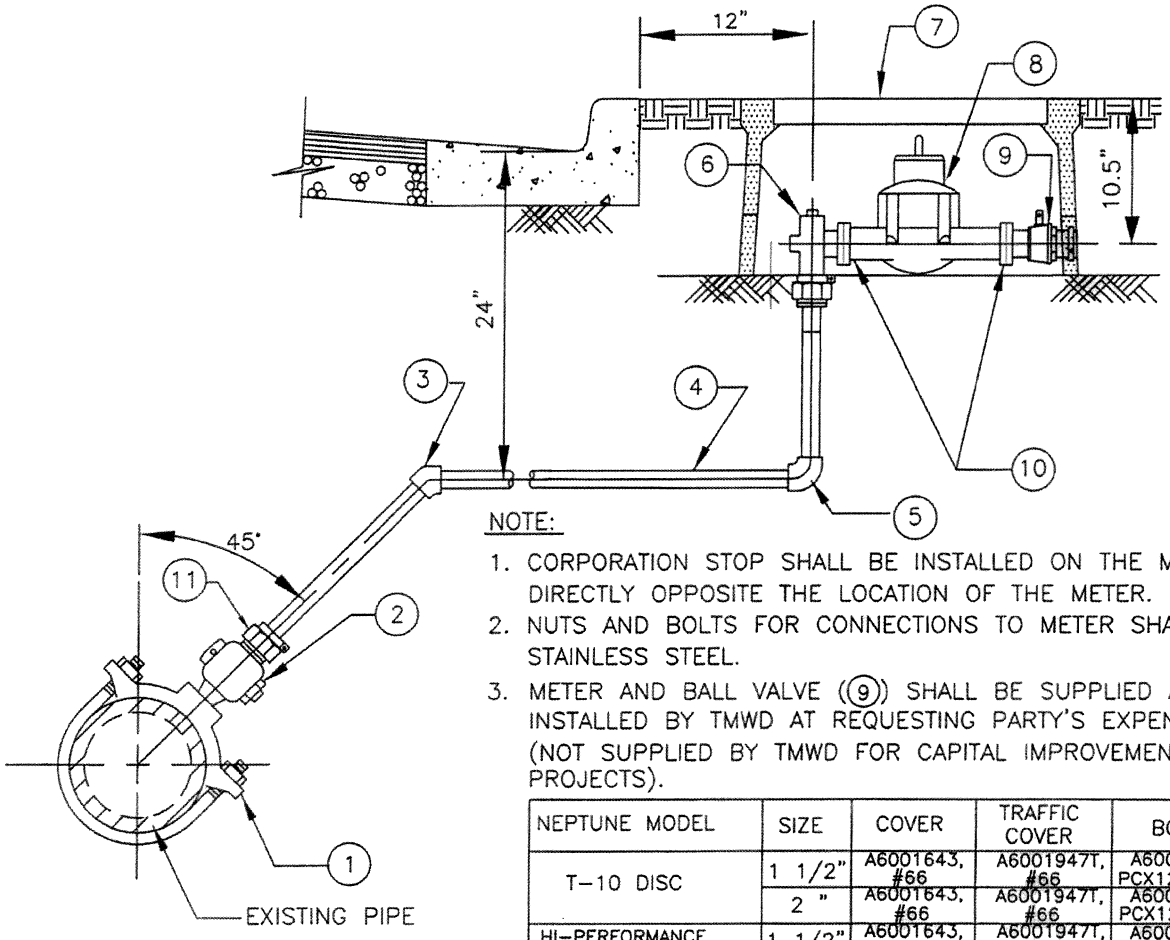

NOTE:

1. CORPORATION STOP SHALL BE INSTALLED ON THE MAIN DIRECTLY OPPOSITE THE LOCATION OF THE METER.
2. NUTS AND BOLTS FOR CONNECTIONS TO METER SHALL BE STAINLESS STEEL.
3. METER AND BALL VALVE (⑨) SHALL BE SUPPLIED AND INSTALLED BY TMWD AT REQUESTING PARTY'S EXPENSE. (NOT SUPPLIED BY TMWD FOR CAPITAL IMPROVEMENT PROJECTS).

NEPTUNE MODEL	SIZE	COVER	TRAFFIC COVER	BOX
T-10 DISC	1 1/2"	A6001643, #66	A6001947T, #66	A6001640 PCX12, #66
	2 "	A6001643, #66	A6001947T, #66	A6001640 PCX12, #66
HI-PERFORMANCE TURBINE W/STRAINER (NOT SHOWN)	1 1/2"	A6001643, #66	A6001947T, #66	A6001640 PCX12, #66
	2"	A6001643, #66	A6001947T, #66	A6001640 PCX12, #66
TRU FLO COMPOUND W/ SEPARATE STRAINER (NOT SHOWN)	2"	A6001975, #67	A6001947T, #67	A6001974 PCX12, #66

ACCOMPANYING STD.'S T700, T701, T702 AND T116.

ITEM	DESCRIPTION	SIZE
①	SERVICE SADDLE-DOUBLE STRAP-BRONZE JONES 979, MCDONALD 3825, MUELLER BR2B, CAMBRIDGE BRASS (CB) #810- CC THREAD	MAIN SIZE X 2"
②	CORPORATION STOP-JONES E1930, FORD FB600-4NL, MUELLER B25000N CAMBRIDGE BRASS 301INL-M7B7, MCDONALD 74701B	2"
③	45° ELBOW-COPPER TO COPPER SJxSJ	2"
④	COPPER TUBING-TYPE "K" SOFT	2"
⑤	90° ELBOW-SJXSJ	2"
⑥	ANGLE METER STOP-JONES E1975W, FORD BFA43-777WNL, CB210NL-B7MF7	2"
⑦	METER BOX W/ COVER - ARMORCAST	SEE TABLE
⑧	NEPTUNE WATER METER, E-CODER)R900i WITH STUBBY ANTENNA CU. FT. REGISTER (TYPE TO BE DETERMINED BY TMWD)	SEE TABLE
⑨	BALL VALVE-JONES E1913W, FLGxFIP, CB# 212NL-F7MF7 -FORD BF13-777WNL OR 666WNL, W/HB67S HANDLE, FLGxFIP	1-1/2" OR 2"
⑩	NEOPRENE FULL FACE GASKET	1-1/2" OR 2"
⑪	PACK JOINT	

CITY OF TORRANCE

DATE ISSUED	TYPICAL 1-1/2" OR 2" METER (NON-TRAFFIC AREA) INSTALLATION WITH 2" SERVICE LINE	STANDARD NO.
JAN 2011	ROBERT J. BESTE PUBLIC WORKS DIRECTOR R.C.E. NO. 50737	T 704 SHEET 1 OF 1

X:\ENG\VPrasad\Water Standards\T704.dwg 2/08/11 13:17 vprasad

X:\ENG\VPrasad\Water Standards\T708.dwg 2/08/11 13:53 vprasad

AIR AND VACUUM RELEASE VALVE

CITY OF TORRANCE

ACCOMPANYING STD'S T700, T701, T702, T712 AND T116

DATE ISSUED
JAN 2011

ROBERT J. BESTE
PUBLIC WORKS DIRECTOR
R.C.E. NO. 50737

STANDARD NO.
T 708
SHEET 1 OF 1

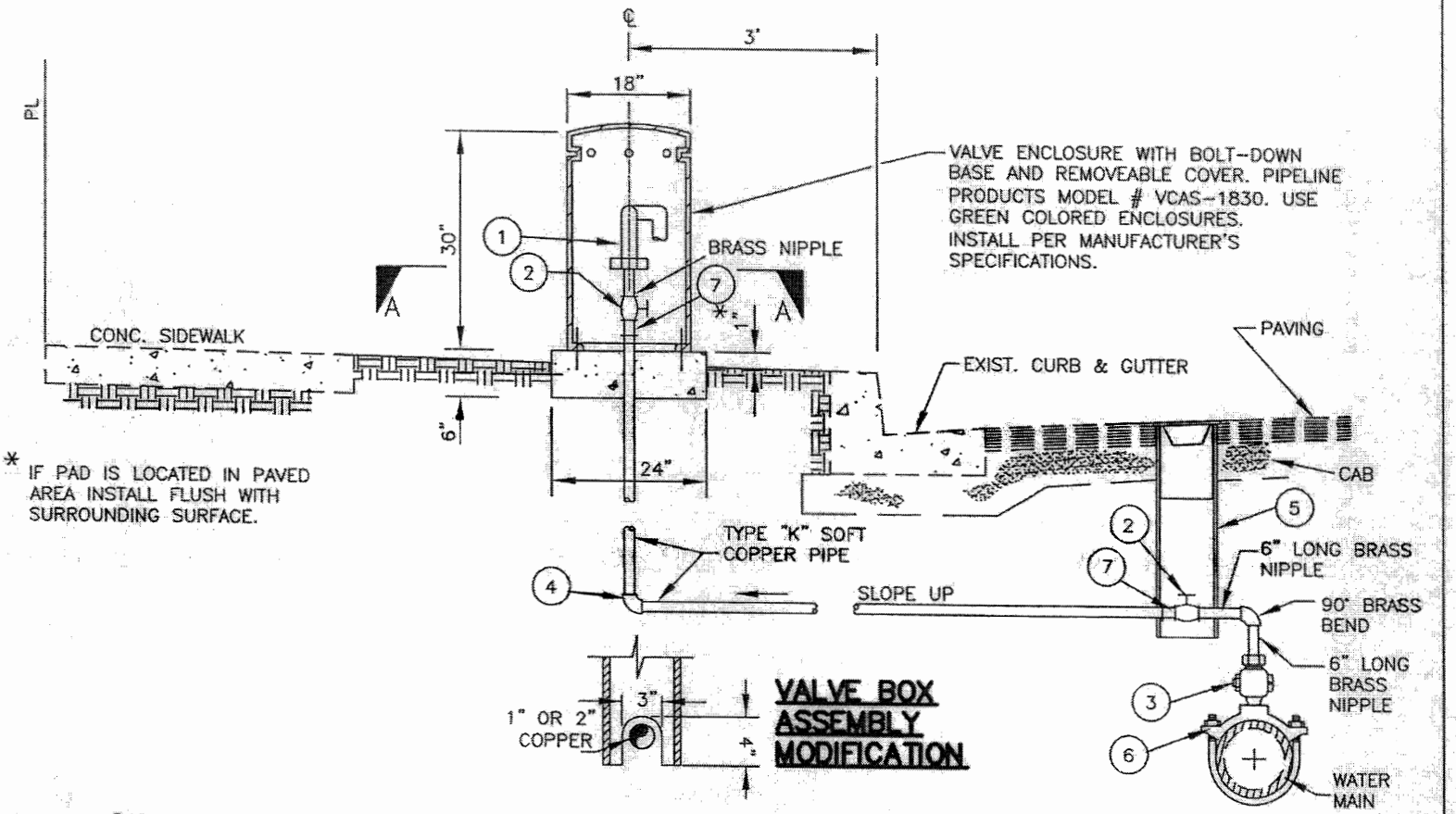

* IF PAD IS LOCATED IN PAVED AREA INSTALL FLUSH WITH SURROUNDING SURFACE.

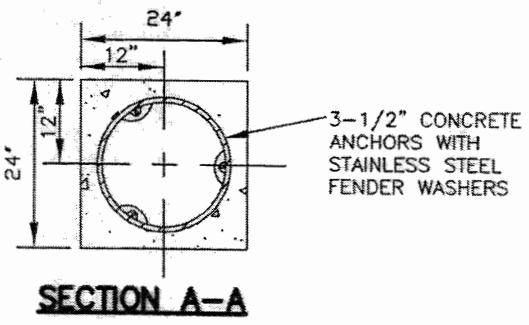

SECTION A-A

VALVE & PIPE OMITTED FOR CLARITY

COMBINATION AIR & VACUUM RELEASE VALVE **(FOR MAIN SIZE >= 16" USE 2", FOR MAIN SIZE < 16", USE 1")				
ITEM	PART NO.		**SIZE	DESCRIPTION
1	ARI D-040-P		1" OR 2"	COMBINATION AIR & VACUUM RELEASE VALVE
2	B11-444NL(FORD)	E-1900(JONES)	1"	BALL VALVE, FIPxFIP
	B11-777NL(FORD)	E-1900(JONES)	2"	
	CAMBRIDGE BRASS	#202NL-F4F4	1"	
	CAMBRIDGE BRASS	#202NL-F7F7	2"	
3	FB 1700-4NL(FORD)	E-1931(JONES)	1"	CORPORATION STOP, CCxFIP
	FB 1700-7NL(FORD)	E-1961(JONES)	2"	
	CAMBRIDGE BRASS	#30NL-M4F4	1"	
	CAMBRIDGE BRASS	#301NL-M7F7	2"	
4			1" OR 2"	90° COPPER ELBOW, SJXSJ
5				VALVE BOX ASSEMBLY (SEE T712) MOD.
6	J979(JONES)	CAMBRIDGE BRASS #810	1" OR 2"	CC SERVICE SADDLE-DOUBLE STRAP
7			1" OR 2"	COPPER FITTING SJ x MIP

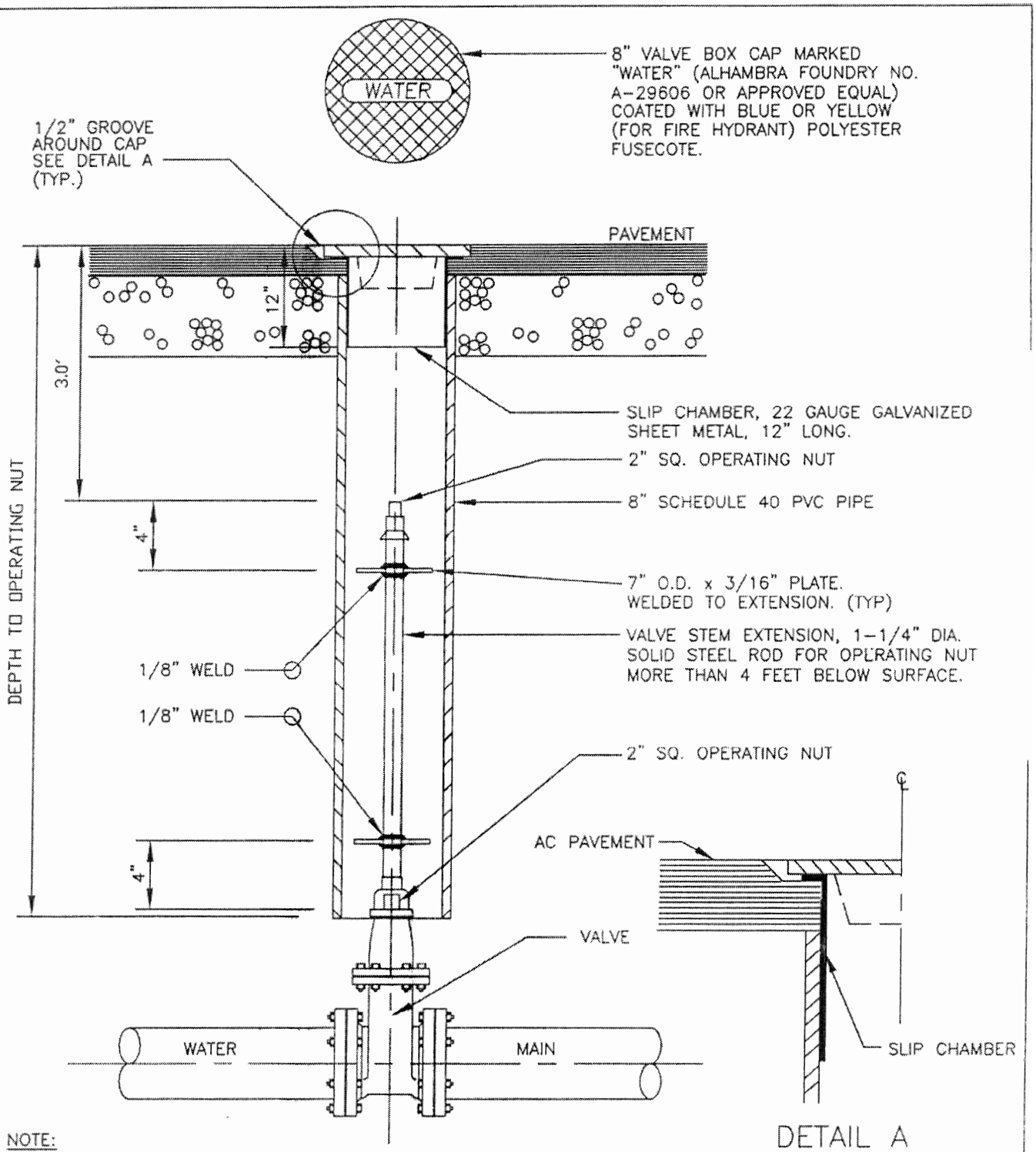

NOTE:

VALVE STEM EXTENSION SHALL BE PROVIDED WHERE DEPTH TO OPERATING NUT EXCEEDS 4'-0".

ACCOMPANYING STD. T700 AND T701

CITY OF TORRANCE

DATE ISSUED	VALVE BOX ASSEMBLY	STANDARD NO.
11 DEC 2006		T712
	ROBERT J. BESTE PUBLIC WORKS DIRECTOR R.C.E. NO. 50737	SHEET 1 OF 1

EM/T712-3

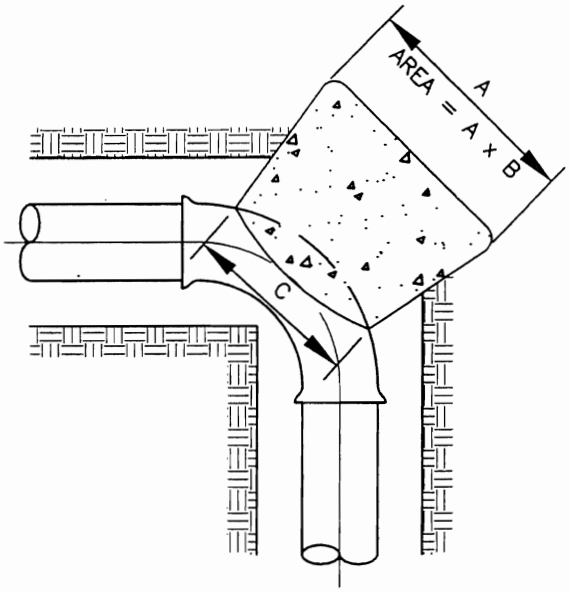

90 BEND

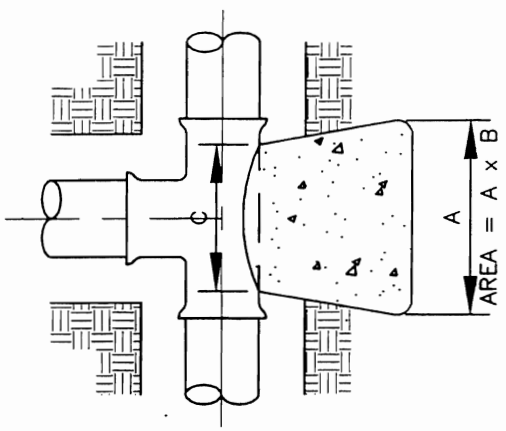

TEE

EXPOSED PORTION OF RE-BARS SHALL BE FIELD COATED W/TAR TO PREVENT CORROSION. MAKE BLOCK FULL WIDTH OF TRENCH.

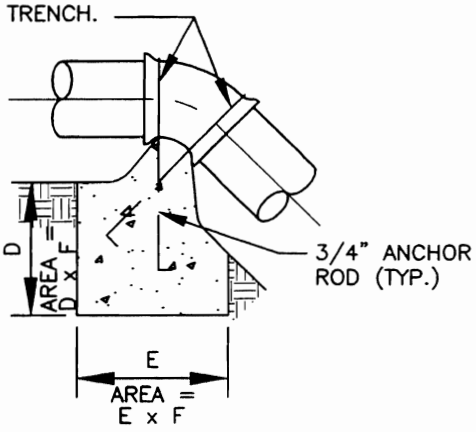

VERTICAL BEND

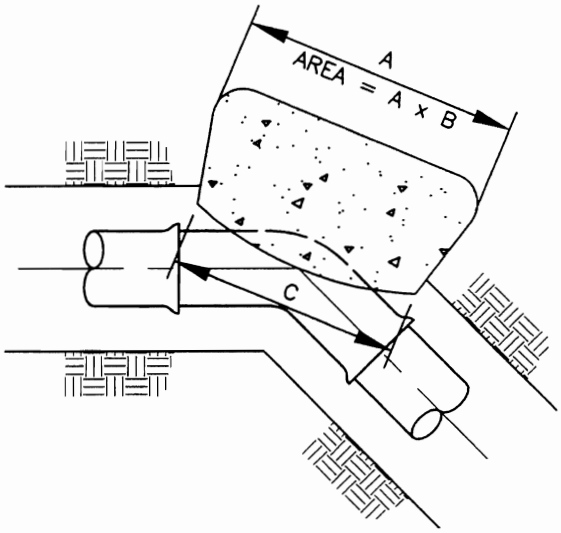

BEND

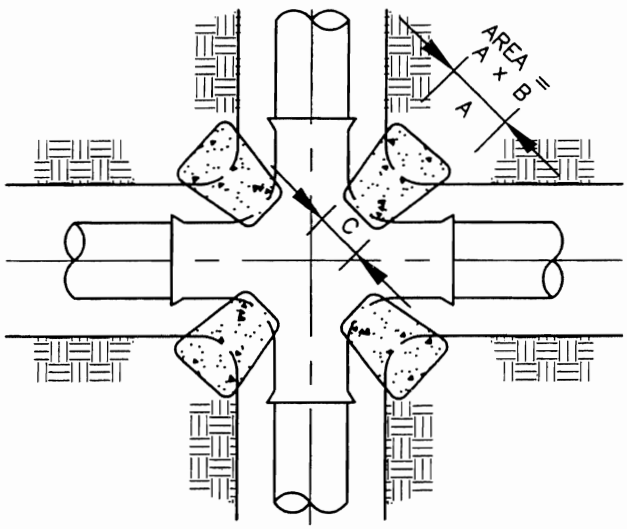

CROSS

NOTE:

1) B = DEPTH
2) SEE SHEET 2 FOR THRUST BLOCK SCHEDULE AND NOTES.

CITY OF TORRANCE - ENGINEERING DEPARTMENT

DATE ISSUED	CONCRETE THRUST BLOCK	STANDARD NO.
16 NOV 1998	RICHARD W. BURTT ENGINEERING DIRECTOR R.C.E. NO. 32862	T713-1 SHEET 1 OF 2

DV/EM/T713-1

VERTICAL BENDS														
NOMINAL PIPE SIZE (INCHES)	TEST PRESSURE (PSI)	BENDS LESS THAN OR EQUAL TO ANGLE												ALL BENDS
		11–1/4°			22–1/2°			45°			90°			
		D	E	F	D	E	F	D	E	F	D	E	F	C
6"	200	1'–6"	3'–0"	1'–0"	2'–0"	4'–0"	1'–0"	3'–0"	5'–6"	1'–0"	4'–0"	7'–0"	2'–0"	8"
8"	200	2'–0"	4'–0"	1'–0"	2'–6"	5'–0"	1'–0"	3'–6"	7'–0"	2'–0"	5'–0"	10'–0"	3'–6"	10"
10"	200	2'–0"	4'–6"	1'–0"	3'–0"	6'–0"	1'–6"	4'–0"	9'–0"	3'–0"	6'–0"	12'–0"	5'–0"	1'–0"
12"	200	2'–6"	5'–0"	1'–0"	3'–6"	7'–0"	2'–0"	5'–0"	10'–0"	4'–0"	7'–0"	14'–0"	7"–0"	1'–0"

HORIZONTAL BENDS																
NOMINAL PIPE SIZE (INCHES)	TEST PRESSURE (PSI)	DEAD ENDS AND TEES			CROSSES			BENDS LESS THAN OR EQUAL TO ANGLE								ALL BENDS
								11–1/4°		22–1/2°		45°		90°		
		A	B	C	A	B	C	A	B	A	B	A	B	A	B	C
6"	200	2'–6"	1'–6"	6"	2'–0"	1'–0"	6"	1'–0"	1'–0"	2'–0"	1'–0"	3'–0"	1'–0"	3'–6"	1'–6"	8"
8"	200	4'–6"	1'–6"	8"	2'–0"	1'–6"	8"	1'–6"	1'–0"	3'–0"	1'–0"	3'–6"	1'–6"	5'–0"	2'–0"	10"
10"	200	5'–6"	2'–0"	10"	2'–6"	2'–0"	10"	2'–0"	1'–0"	3'–0"	1'–6"	4'–0"	2'–0"	6'–0"	2'–6"	1'–0"
12"	200	7'–6"	2'–0"	1'–0"	3'–6"	2'–0"	1'–0"	2'–0"	1'–6"	3'–0"	2'–0"	4'–6"	2'–6"	7'–0"	3'–0"	1'–0"

NOTES:

1. THRUST BLOCK SIZES ARE BASED ON A BEARING CAPACITY OF 1500 P.S.F., WITH A MINIMUM SOIL COVER OF 3'–0".
   FOR SOIL COVER OF 2'–0" TO 3'–0", MULTIPLY BEARING AREA BY A FACTOR OF 1.5
   FOR SOIL COVER OF 1'–0" TO 2'–0", MULTIPLY BEARING AREA BY A FACTOR OF 3
2. DIMENSIONS SHOWN REFER TO THRUST BLOCK TYPES SHOWN ON DETAIL, AND ARE MINIMUM VALUES ONLY.
3. CONCRETE MIX SHALL CONFORM TO SPECIFICATIONS FOR 3000 LBS. STRENGTH AT 28 DAYS WHEN TESTED IN ACCORDANCE WITH ASTM C39.
4. ALL THRUST BLOCKS SHALL BE POURED SOLIDLY AGAINST FIRM, UNDISTURBED SOIL.
5. CONTRACTOR SHALL NOTIFY THE ENGINEERING DIRECTOR IF SOILS HAVE BEEN PREVIOUSLY EXCAVATED AND BACKFILLED. THE DIRECTOR MAY REQUIRE THAT THE DIMENSIONS SHOWN BE INCREASED BY A FACTOR OF 1.5.
6. CONCRETE POURED AGAINST PIPE FITTINGS SHALL BE PLACED SO THAT VALVES AND FITTINGS ARE ACCESSIBLE FOR REPAIR.
7. WHERE WATER MAIN DEAD ENDS ARE BLIND FLANGED OR CAPPED, THE THRUST BLOCK SHALL EXTEND A MINIMUM DISTANCE OF 6" INTO BOTH SIDES OF THE TRENCH.

ACCOMPANYING STD. T700

CITY OF TORRANCE - ENGINEERING DEPARTMENT

DATE ISSUED	THRUST BLOCK SCHEDULE	STANDARD NO.
16 NOV 1998	RICHARD W. BURTT ENGINEERING DIRECTOR R.C.E. NO. 32862	T713-1 SHEET 2 OF 2

DV/EM/T713-1

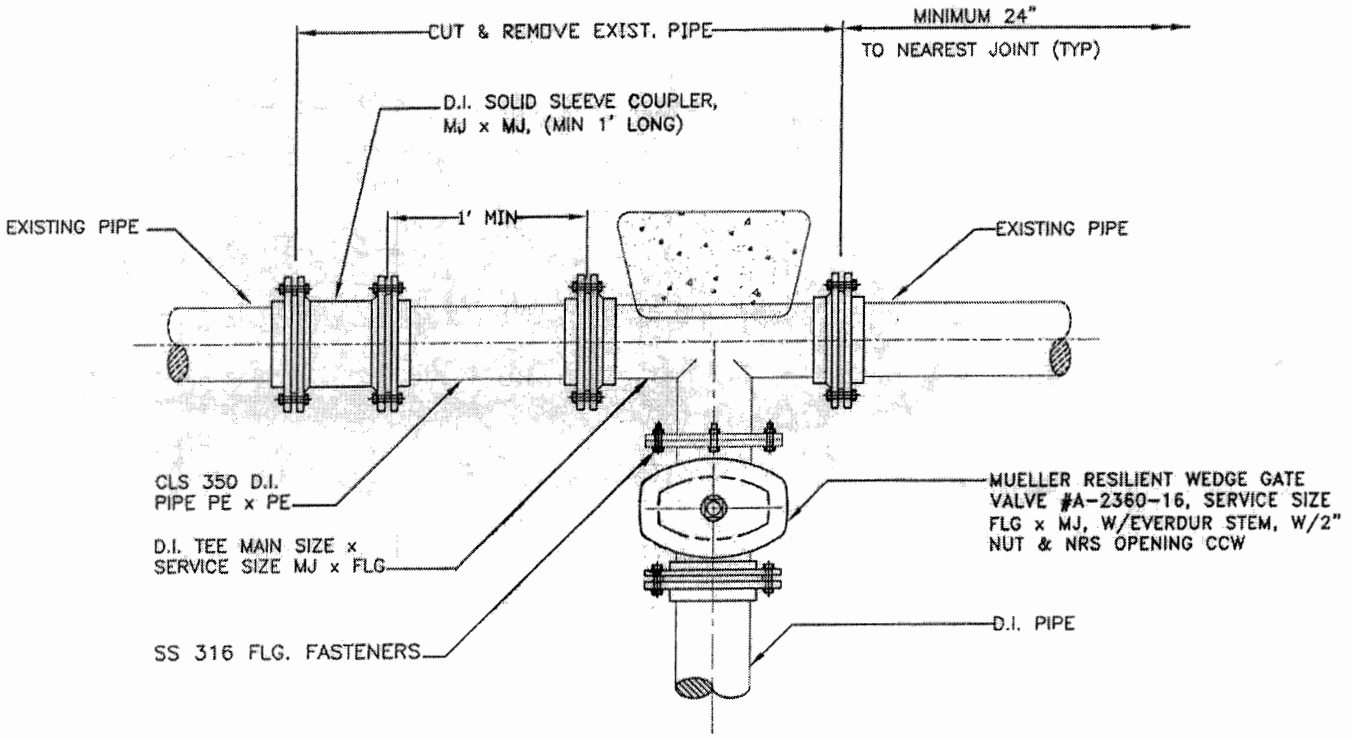

CUT IN METHOD

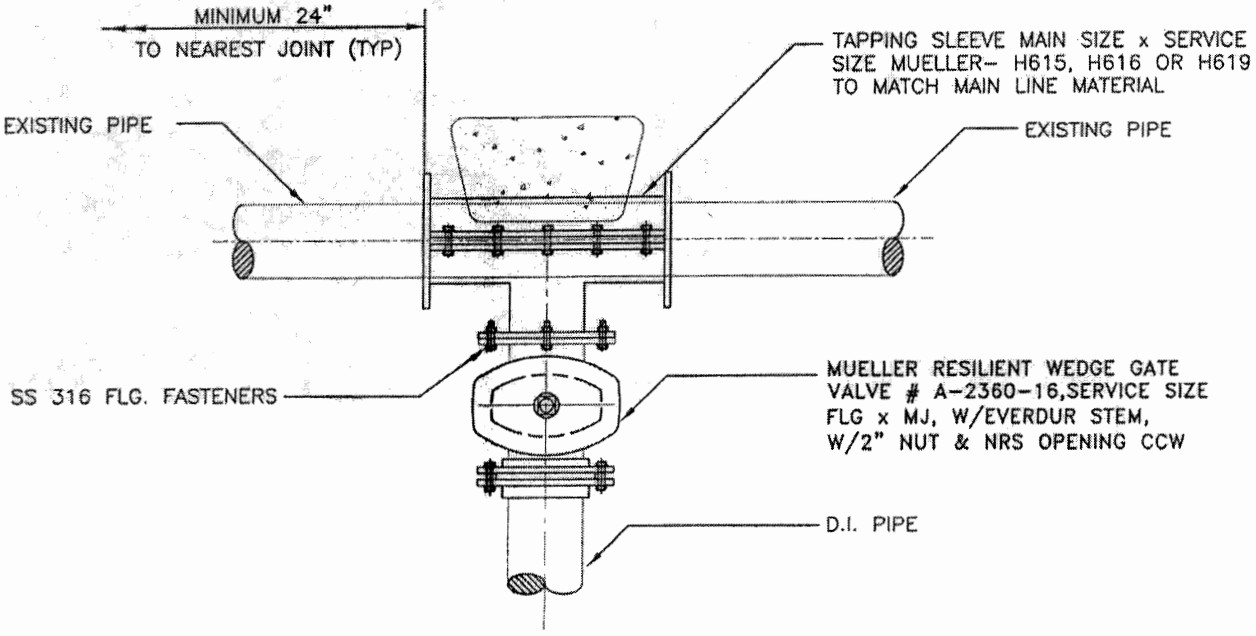

HOT TAP METHOD

ACCOMPANYING STD. T700, T701, T712, AND T713

CITY OF TORRANCE

DATE ISSUED	D.I. CONNECTION TO MAIN	STANDARD NO.
JAN 2011	ROBERT J. BESTE PUBLIC WORKS DIRECTOR R.C.E. NO. 50737	T 723
		SHEET 1 OF 1

X:\ENG\VPrasad\Water Standards\T723.dwg 2/08/11 14:18 vprasad

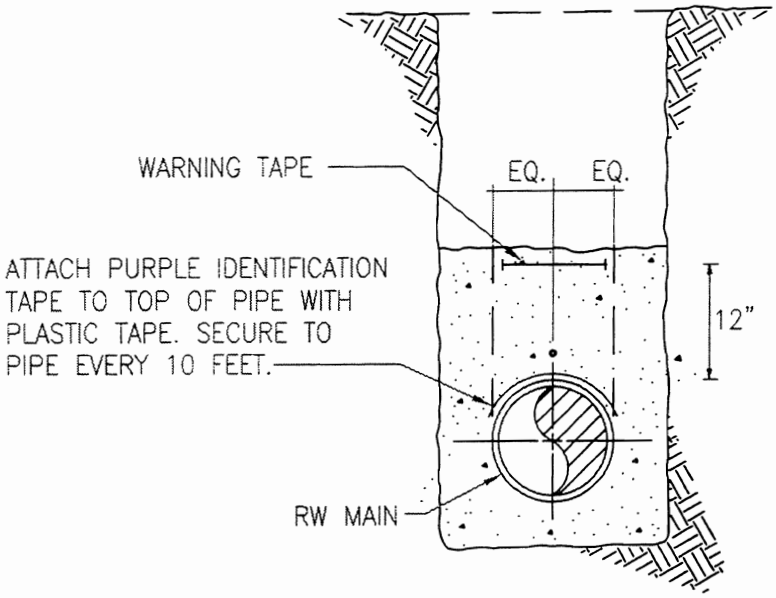

METALLIC RECLAIMED WATER PIPE

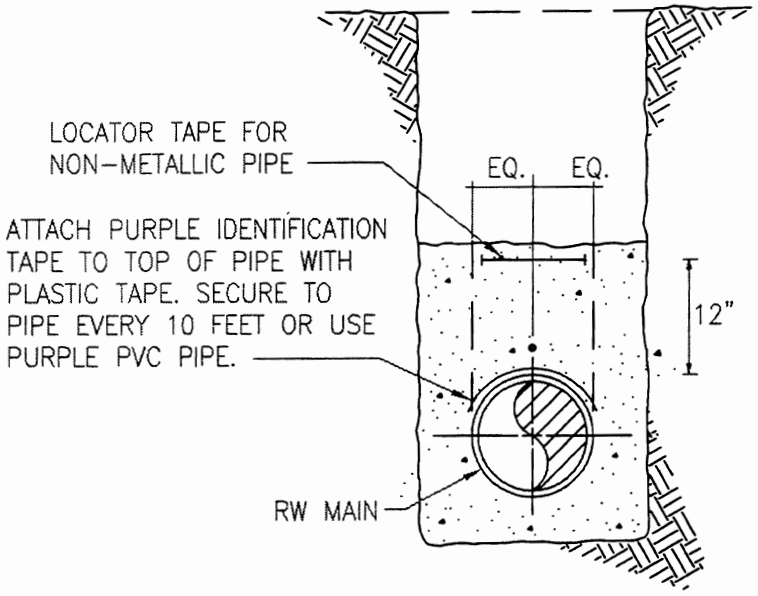

NON-METALLIC RECLAIMED WATER PIPE

CITY OF TORRANCE - ENGINEERING DEPARTMENT		
DATE ISSUED	**RECLAIMED WATER PIPE IDENTIFICATION**	STANDARD NO.
28 FEB 1997		**T801-0**
	RICHARD W. BURTT ENGINEERING DIRECTOR R.C.E. NO. 32862	SHEET 1 OF 1

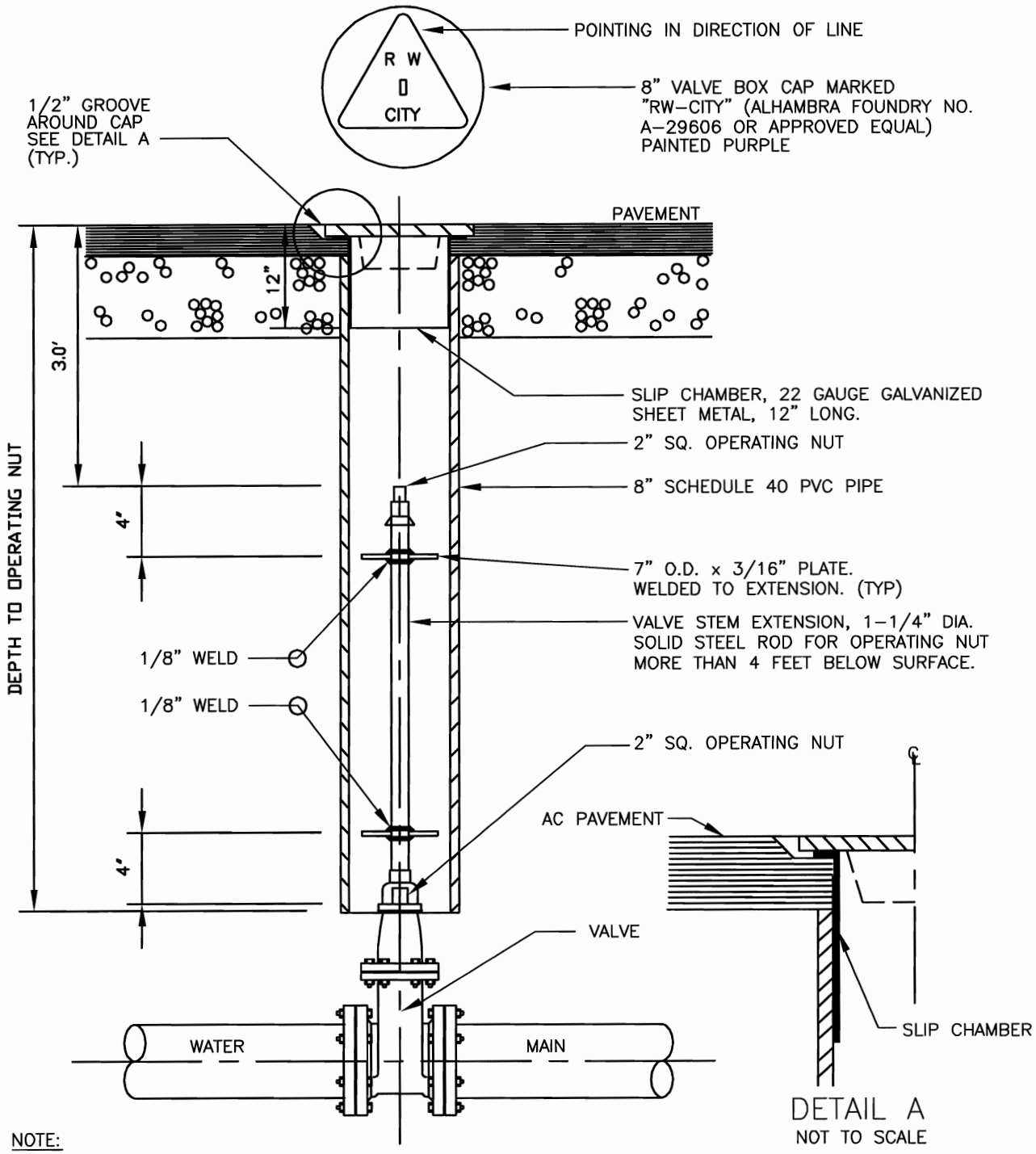

NOTE:

1. VALVE STEM EXTENSION SHALL BE PROVIDED WHERE DEPTH TO OPERATING NUT EXCEEDS 4'–0".
2. FACE OF CURB SHALL BE NOTCHED WITH "V " & PAINTED PURPLE TO DENOTE VALVE LOCATION.
3. PAINTING OF METER BOX LID AND VALVES AND VALVE TAGS SHALL BE PER THE SPECIFICATIONS.

CITY OF TORRANCE - ENGINEERING DEPARTMENT

DATE ISSUED	RECLAIMED WATER VALVE BOX ASSEMBLY	STANDARD NO.
28 FEB 1997	RICHARD W. BURTT ENGINEERING DIRECTOR R.C.E. NO. 32862	T806-0 SHEET 1 OF 1

APPENDIX III

SPPWC STANDARD PLANS

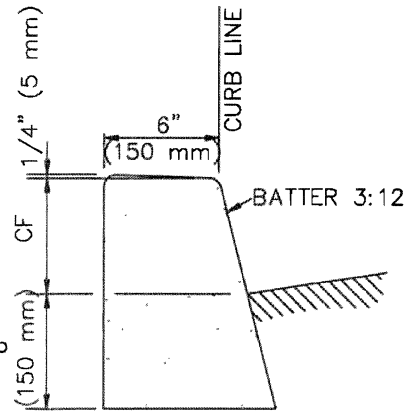

A1–6(150) AND
A1–8(200)

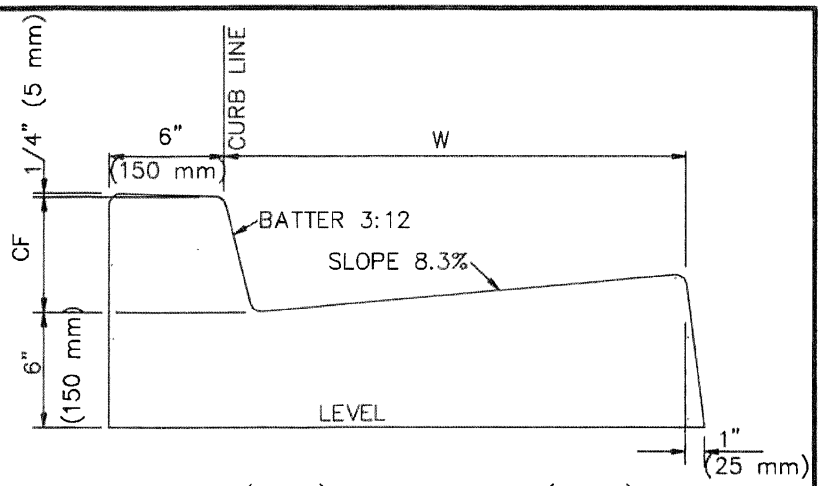

A2–6(150) AND A2–8(200)

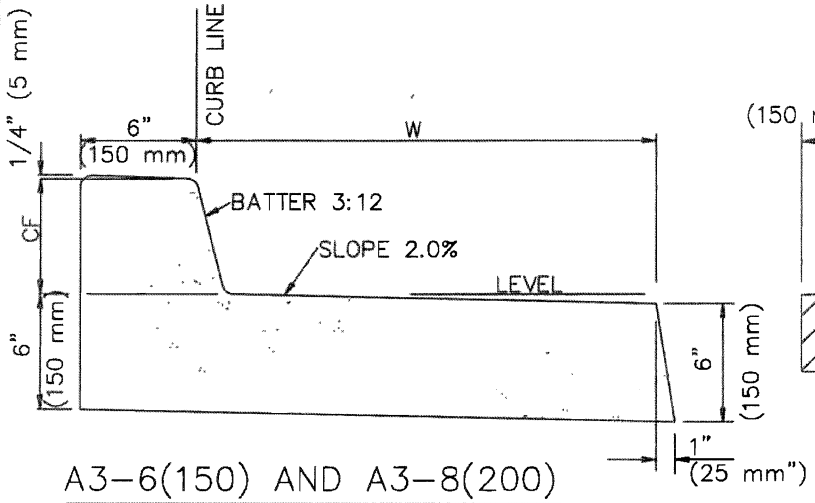

A3–6(150) AND A3–8(200)

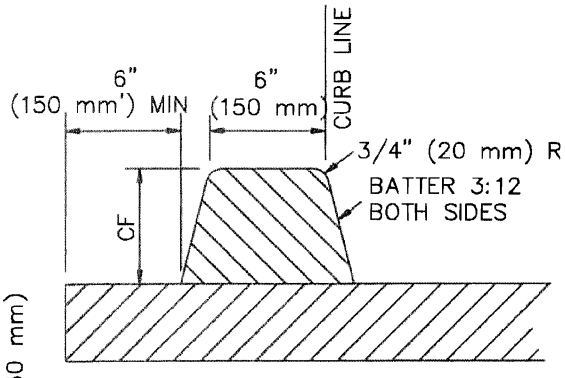

D1–6(150) AND
D1–8(200)

NOTES:

1. THE LAST NUMBER IN THE DESIGNATION IS THE CURB FACE (CF) HEIGHT, INCHES (mm).
2. GUTTER WIDTH, W, IS 24" (600 mm) UNLESS OTHERWISE SPECIFIED.
3. TYPES A1, A2, A3 AND C1 SHALL BE CONSTRUCTED FROM PCC.
4. TYPE D1 CURB SHALL BE CONSTRUCTED FROM ASPHALT CONCRETE.
5. TYPE C1 CURB SHALL BE ANCHORED WITH STEEL DOWELS AS SHOWN OR WITH AN EPOXY APPROVED BY THE ENGINEER.
6. ALL EXPOSED CORNERS ON PCC CURBS AND GUTTERS SHALL BE ROUNDED WITH A 1/2" (15 mm) RADIUS.

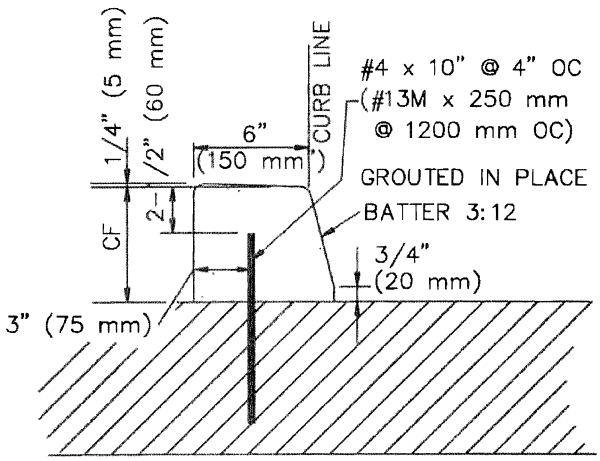

C1–6(150) AND C1–8(200)

STANDARD PLAN FOR PUBLIC WORKS CONSTRUCTION

PROMULGATED BY THE
PUBLIC WORKS STANDARDS INC.
GREENBOOK COMMITTEE
1984
REV. 1996, 2009

CURB AND GUTTER – BARRIER

USE WITH STANDARD SPECIFICATIONS FOR PUBLIC WORKS CONSTRUCTION

STANDARD PLAN
120–2
SHEET 1 OF 1

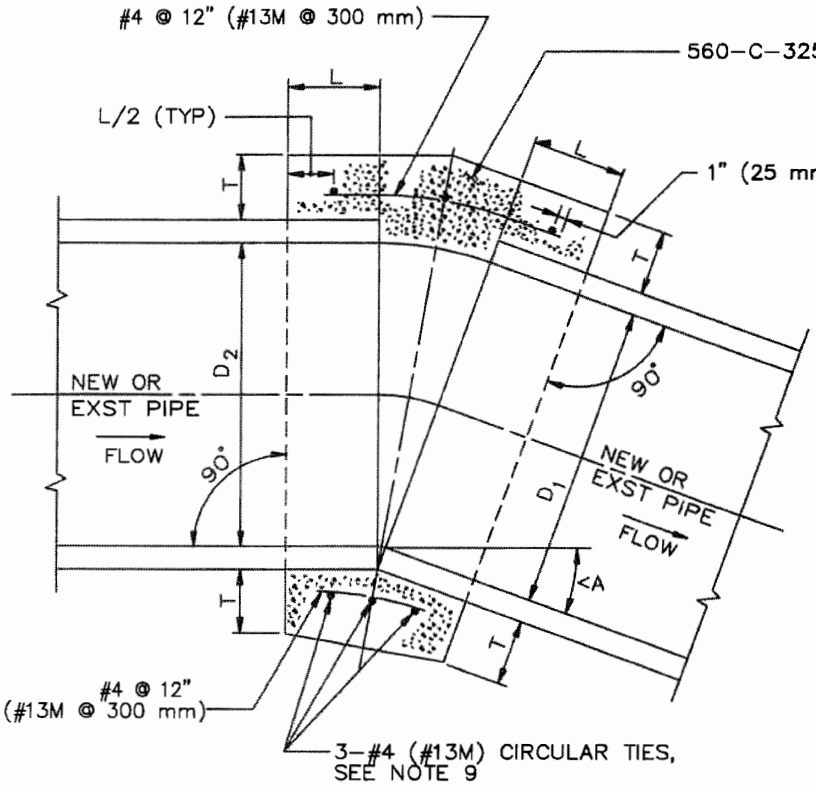

D	L	T
12" (300 mm)	12" (300 mm)	4" (100 mm)
18" (450 mm)	12" (300 mm)	5" (125 mm)
24" (600 mm)	12" (300 mm)	6" (150 mm)
30" (750 mm)	18" (450 mm)	7" (175 mm)
36" (900 mm)	18" (450 mm)	9" (225 mm)
42" (1050 mm)	18" (450 mm)	9" (225 mm)
48" (1200 mm)	18" (450 mm)	10" (250 mm)
57" (1425 mm)	18" (450 mm)	10" (250 mm)
60" (1500 mm)	21" (525 mm)	11" (275 mm)
66" (1650 mm)	21" (525 mm)	11" (275 mm)
72" (1800 mm)	24" (600 mm)	12" (300 mm)

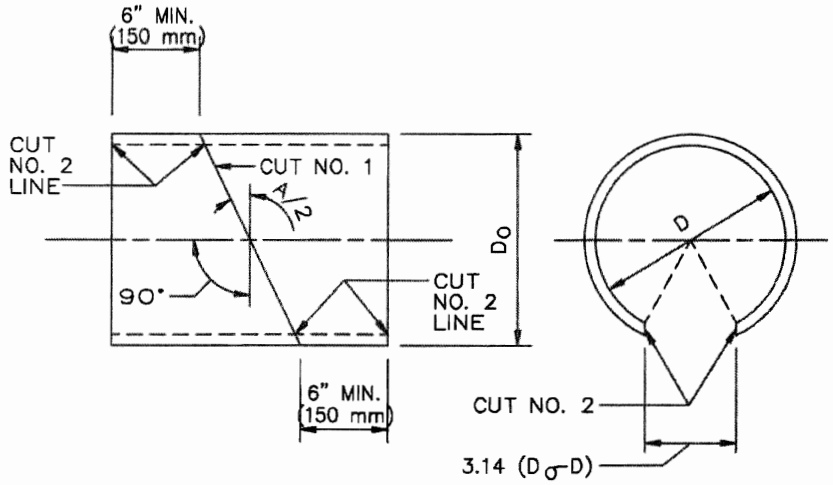

DETAIL "A" (SEE NOTE 10)

SONO-TUBE, OR EQUAL, INTERIOR FORM

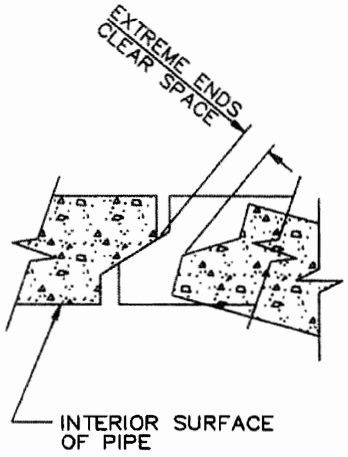

DETAIL "B"

TYPICAL JOINT FOR REINFORCED CONCRETE PIPE

CUT NO. 1: SAW THE TUBE AT AN ANGLE OF A/2 WITH THE TRANSVERSE PLANE. REVERSE ONE SECTION AND TAPE BOTH SECTIONS TOGETHER FORMING THE DEFLECTION ANGLE A.

CUT NO. 2: SAW THE TUBE LONGITUDINALLY REMOVING A STRIP 3.14 (D_O-D) WIDE ON THE SIDE OPPOSITE THE OPEN JOINT. BEND THE ENDS OF THE CUT TOGETHER AND INSERT THE TUBE IN THE PIPE.

STANDARD PLANS FOR PUBLIC WORKS CONSTRUCTION

PROMULGATED BY THE PUBLIC WORKS STANDARDS INC. GREENBOOK COMMITTEE 1992 REV. 1996, 1997, 1999, 2009

CONCRETE COLLAR FOR RCP 12" (300 mm) THROUGH 72" (1800 mm)

USE WITH STANDARD SPECIFICATIONS FOR PUBLIC WORKS CONSTRUCTION

STANDARD PLAN 380-4

SHEET 1 OF 2

NOTES

1. A CONCRETE COLLAR IS REQUIRED WHERE THE CHANGE IN GRADE EXCEEDS 10%.

2. FOR CURVE JOINTS (SEE DETAIL B, SHEET 1)

   IF THE EXTREME ENDS OF THE PIPE LEAVE A CLEAR SPACE THAT IS GREATER THAN 1" (25 mm), BUT IS LESS THAN 3" (75 mm) A CONCRETE COVER IS REQUIRED IN ACCORDANCE WITH SSPWC 306-1.2.4.

   IF THE EXTREME ENDS OF THE PIPE LEAVE A CLEAR SPACE THAT IS EQUAL TO OR GREATER THAN 3" (75 mm), BUT LESS THAN 6" (150 mm), A CONCRETE COLLAR IS REQUIRED. IF THE CLEAR SPACE IS 6" (150 mm) OR GREATER, A TRANSITION STRUCTURE IS REQUIRED.

3. CONCRETE COLLAR SHALL NOT BE USED FOR A SIZE CHANGE ON THE MAIN LINE.

4. CONNECTOR PIPES

   A. WHERE PIPES OF DIFFERENT DIAMETERS ARE JOINED WITH A CONCRETE COLLAR, L AND T SHALL BE THOSE OF THE LARGER PIPE. $D=D_1$ OR D_2, WHICHEVER IS GREATER.
   B. WHEN D_1 IS EQUAL TO OR LESS THAN D_2, JOIN INVERTS AND WHEN D_1 IS GREATER THAN D_2, JOIN SOFFITS.

5. FOR PIPE LARGER THAN 72" (1800 mm) SPECIAL COLLAR DETAILS ARE REQUIRED.

6. FOR PIPE SIZE NOT LISTED USE NEXT SIZE LARGER.

7. REINFORCEMENT SHALL CONFORM TO ASTM A 615 (A 615 M) GRADE 40 (300).

8. WHERE REINFORCING IS REQUIRED THE DIAMETER OF THE CIRCULAR TIES SHALL BE D+(2X WALL THICKNESS) + T.

9. REINFORCING SHALL BE USED WHERE THE PIPE DIAMETER IS GREATER THAN 21" (525 mm) AND ON ALL PIPES WHERE THE SPACES BETWEEN THE EXTREME OUTER ENDS IS 3" (75 mm) OR LARGER.

   CIRCULAR TIES:

PIPE DIAMETER	NO. OF CIRCULAR TIES
21" (525 mm) OR LESS	3
24" (600 mm) TO 30" (750 mm)	3
33" (825 mm) TO 57" (1425 mm)	4
60" (1500 mm) TO 72" (1800 mm)	5

   WHERE THE SPACE BETWEEN PIPE ENDS EXCEEDS 3" (75 mm), THE NUMBER OF CIRCULAR TIES SHALL BE INCREASED TO MAINTAIN AN APPROXIMATE SPACING OF 6" (150 mm) O.C.

10. WHERE THE PIPE IS 21" (525 mm) OR LESS IN DIAMETER AN INTERIOR FORM OF UNSEALED SONO-TUBE OR EQUAL SHALL BE USED TO PROVIDE A SMOOTH INTERIOR JOINT. THE PAPER FORM MAY BE LEFT IN PLACE (SEE DETAIL A). WHEN THE PIPE IS 24" (600 mm) OR LARGER A REMOVABLE INTERIOR FORM SHALL BE USED OR THE INTERIOR JOINT SHALL BE COMPLETELY FILLED WITH MORTAR AND NEATLY POINTED.

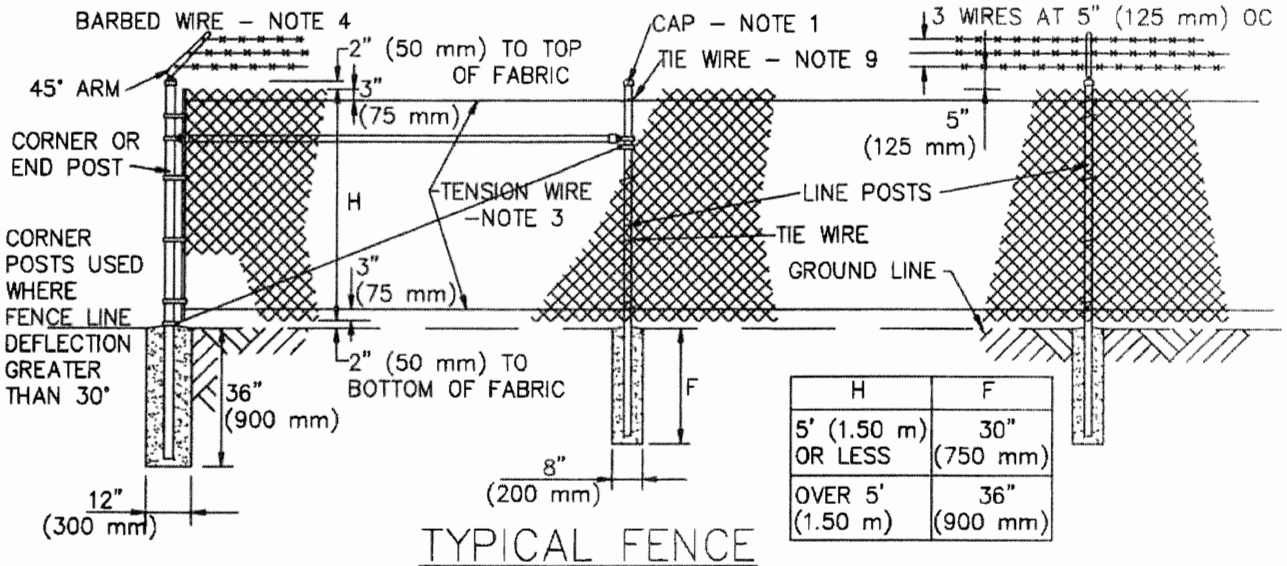

H	F
5' (1.50 m) OR LESS	30" (750 mm)
OVER 5' (1.50 m)	36" (900 mm)

TYPICAL FENCE

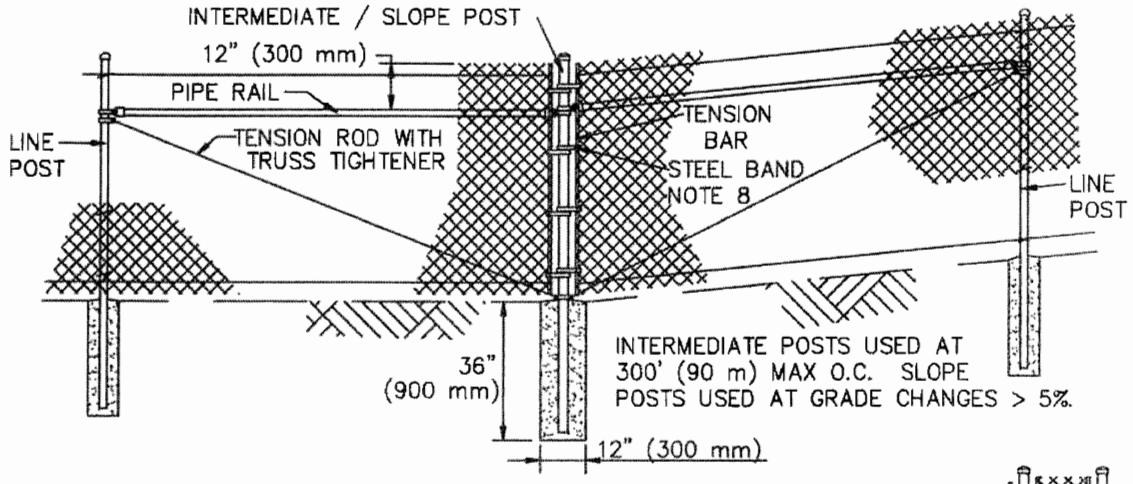

INTERMEDIATE / SLOPE POST

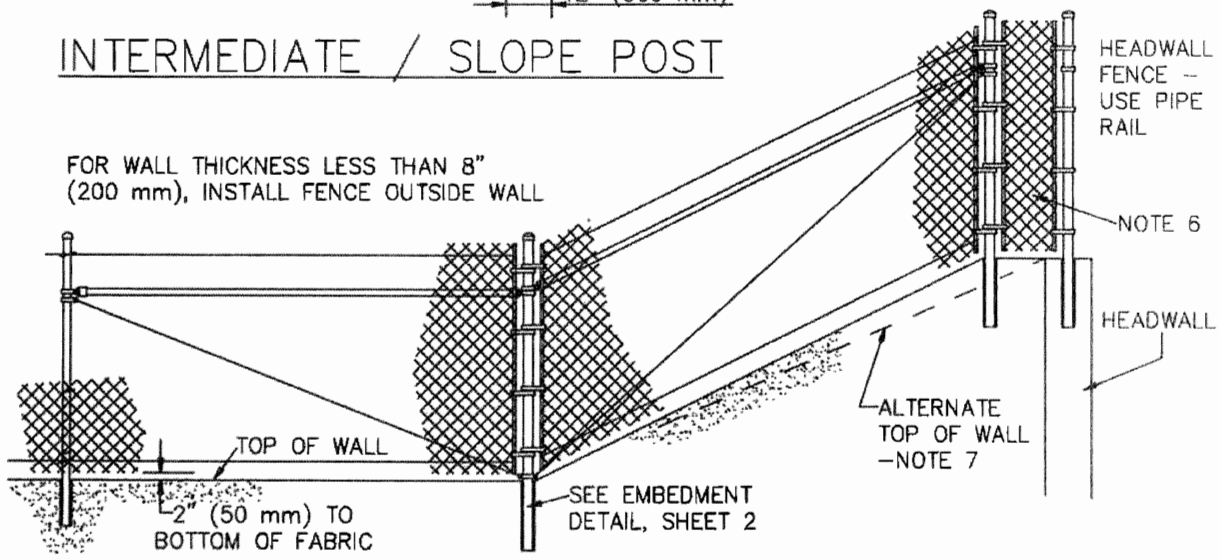

CHANNEL WALL AND WINGWALL AT HEADWALL

STANDARD PLANS FOR PUBLIC WORKS CONSTRUCTION

PROMULGATED BY THE PUBLIC WORKS STANDARDS INC. GREENBOOK COMMITTEE 1984 REV. 1998, 2005

CHAIN LINK FENCE AND GATES

USE WITH STANDARD SPECIFICATIONS FOR PUBLIC WORKS CONSTRUCTION

STANDARD PLAN 600–3

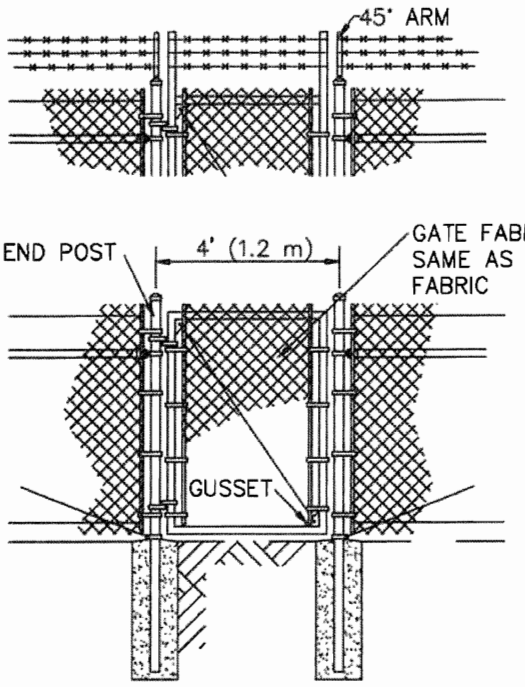

WALK GATE

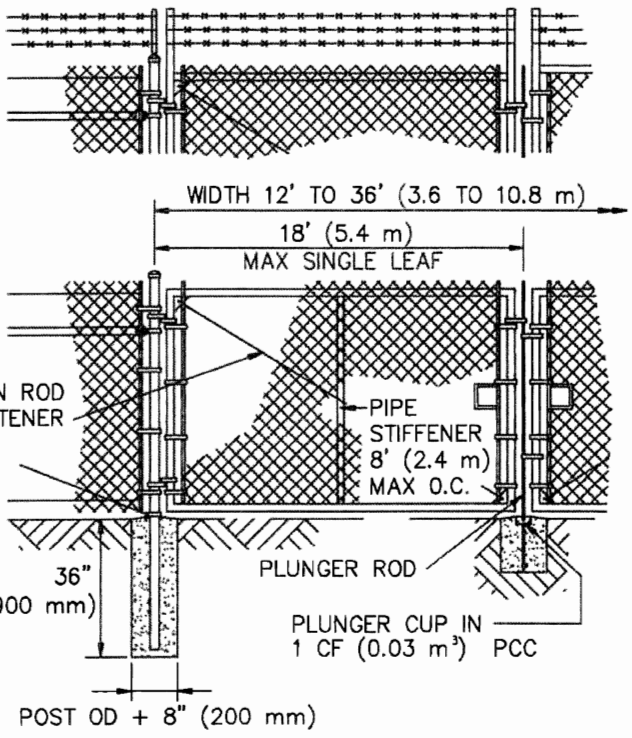

DRIVE GATE

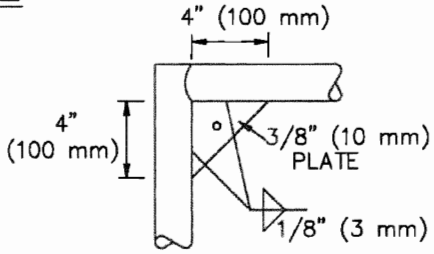

GUSSET

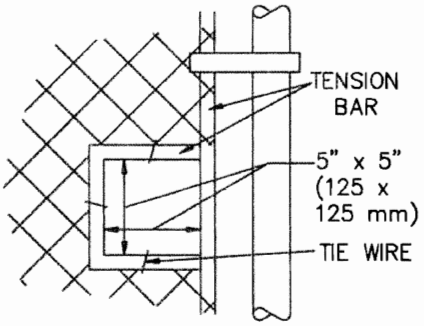

CHAIN AND LOCK
CUT–OUT

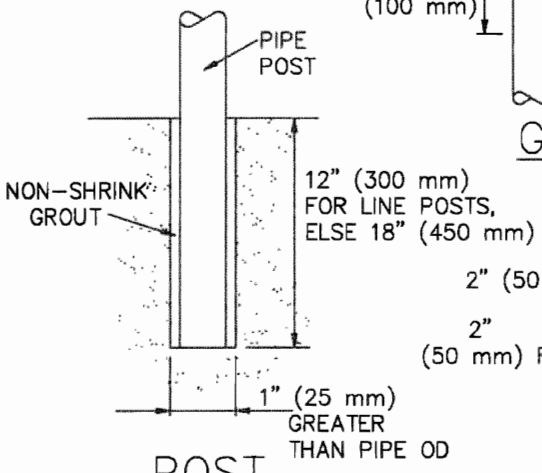

POST
EMBEDMENT

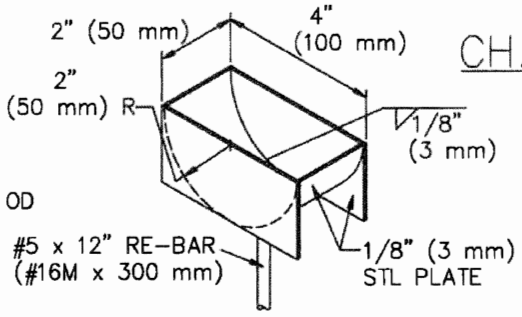

PLUNGER CUP
ISOMETRIC

STANDARD PLANS FOR PUBLIC WORKS CONSTRUCTION	STANDARD PLAN
CHAIN LINK FENCE AND GATES	**600–3**
	SHEET 2 OF 3

NOTES:

1. SECURE DRIVE–FIT GALVANIZED CAP TO POST WITH 1/4" (6 mm) ROUND–HEAD RIVET.
2. H DENOTES FABRIC WIDTH AND NOMINAL FENCE HEIGHT. H = 5' (1.5 m) UNLESS OTHERWISE NOTED.
3. IF FENCE WITH TOP RAIL IS SPECIFIED, DELETE STEEL TENSION WIRE AT TOP, AND PIPE RAILS AT INTERMEDIATE, SLOPE, END AND CORNER POSTS. EXTEND TENSION ROD TO TOP RAIL.
4. BARBED WIRE SHALL BE USED ONLY WHEN SPECIFIED.
5. POST SPACING IS MAXIMUM 10' (3.0 m).
6. FILL CLEAR OPENINGS GREATER THAN 3" (75 mm) WITH FABRIC. FOR OPENINGS LESS THAN 18" (450 mm), TIE FABRIC TO POSTS.
7. USE ONE POST FOR COMBINED SLOPE AND CORNER POST IF TOP OF CHANNEL WALL IS CONSTRUCTED AS SHOWN FOR "ALTERNATE".
8. STEEL BANDS AT TENSION BARS SHALL BE 1/8" x 1" (3 x 25 mm), MINIMUM, SPACED AT MAXIMUM 16" (400 mm).
9. SECURE TENSION WIRES TO EACH LINE POST WITH TIE WIRES.

LOADING CASE I, II, III OR IV
PER SPPWC 617

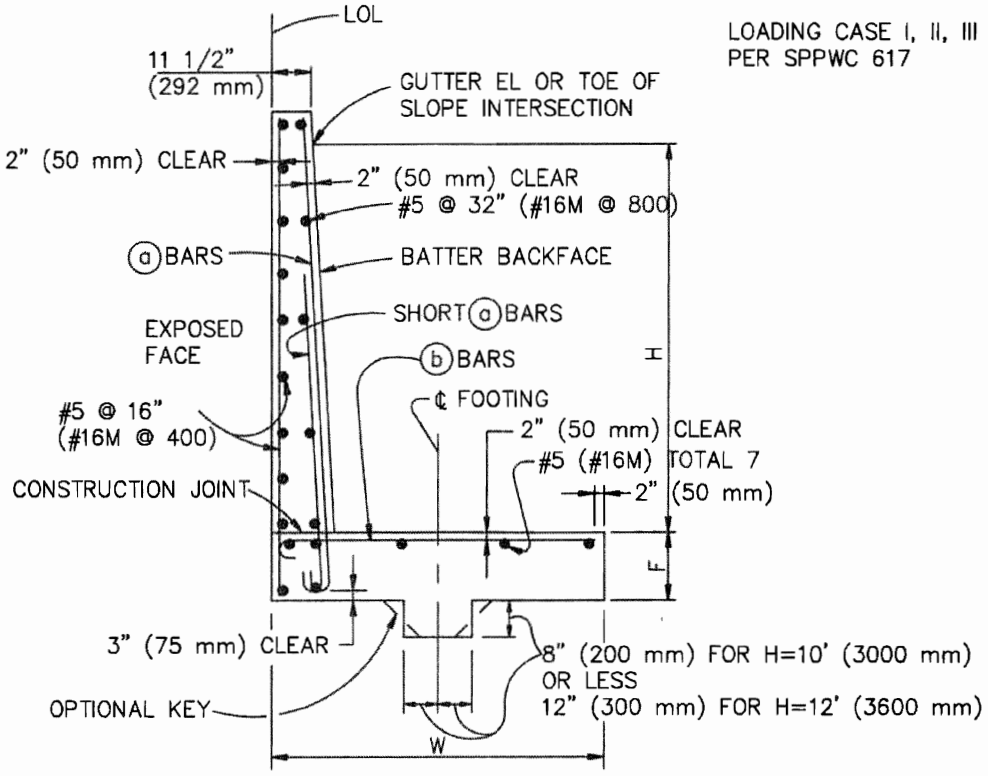

SECTION

NUMBER ABOVE SHORT ⓐ BARS IS DISTANCE, INCHES (mm), FROM TOP OF FOOTING TO END OF BARS

BARS ALONG EXPOSED FACE NOT SHOWN

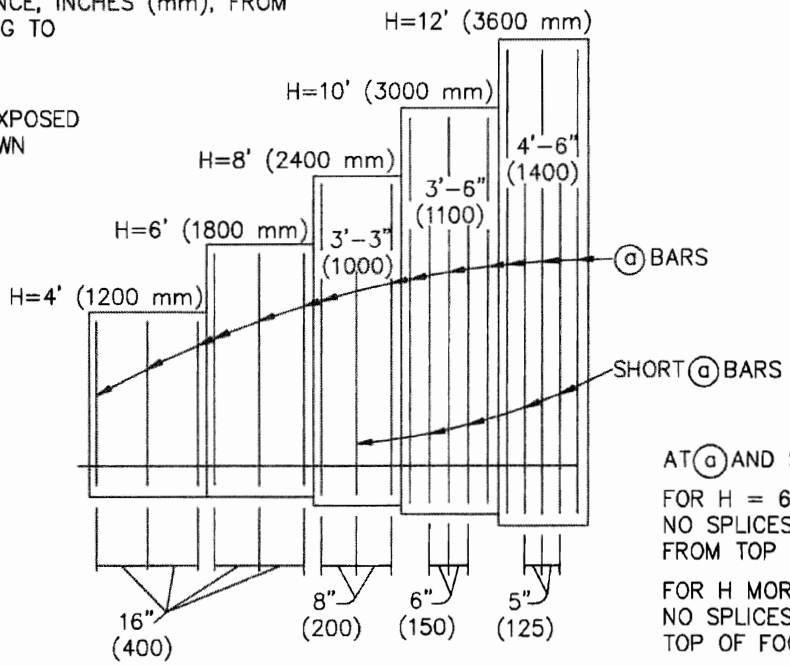

AT ⓐ AND SHORT ⓐ BARS:

FOR H = 6' (1800 mm) OR LESS, NO SPLICES WITHIN 20" (500 mm) FROM TOP OF FOOTING.

FOR H MORE THAN 6' (1800 mm), NO SPLICES WITHIN H/4 FROM TOP OF FOOTING.

ELEVATION

SIMILAR TO CALTRANS TYPE 5

STANDARD PLANS FOR PUBLIC WORKS CONSTRUCTION

PROMULGATED BY THE
PUBLIC WORKS STANDARDS INC.
GREENBOOK COMMITTEE
1984
REV. 1991, 1996, 2005, 2009

REINFORCED CONCRETE RETAINING WALL TYPE 6

USE WITH STANDARD SPECIFICATIONS FOR PUBLIC WORKS CONSTRUCTION

STANDARD PLAN
615-4
SHEET 1 OF 2

TABLE OF REINFORCING STEEL, DIMENSIONS AND DATA

DESIGN H		4' (1200 mm)	6' (1800)	8' (2400)	10' (3000)	12' (3600)
W		4'–0" (1250)	5'–0" (1550)	6'–6" (2000)	8'–0" (2450)	9'–6" (2900)
F		16" (400)	16" (400)	18" (450)	18" (450)	22" (550)
BATTER		NONE	NONE	NONE	100:3	100:6
ⓐ BARS		#5 @ 16" (#16M @ 400)	#5 @ 16" (#16M @ 400)	#5 @ 16" (#16M @ 400)	#5 @ 12" (#16M @ 300)	#5 @ 10" (#16M @ 250)
SHORT ⓐ BARS		———	———	#5 @ 16" (#16M @ 400)	#5 @ 12" (#16M @ 300)	#5 @ 10" (#16M @ 250)
ⓑ BARS		#5 @ 16" (#16M @ 400)	#5 @ 16" (#16M @ 400)	#5 @ 8" (#16M @ 200)	#5 @ 6" (#16M @ 150)	#5 @ 5" (#16M @ 125)
TOE PRESSURE	CASE I psf (kPa)	1600 (80)	2200 (105)	2500 (120)	3000 (145)	3500 (170)
	CASE II psf (kPa)	1500 (75)	2100 (100)	2700 (130)	3400 (165)	4100 (195)
	CASE III psf (kPa)	1600 (80)	2300 (110)	2900 (140)	3800 (185)	4400 (210)
	CASE IV psf (kPa)	2000 (95)	3200 (155)	4200 (200)	5300 (255)	6500 (310)

NOTES:

1. SEE SPPWC 617 FOR STANDARD WALL DETAILS.
2. METRIC REINFORCING BAR SPACING IS IN MILLIMETERS.

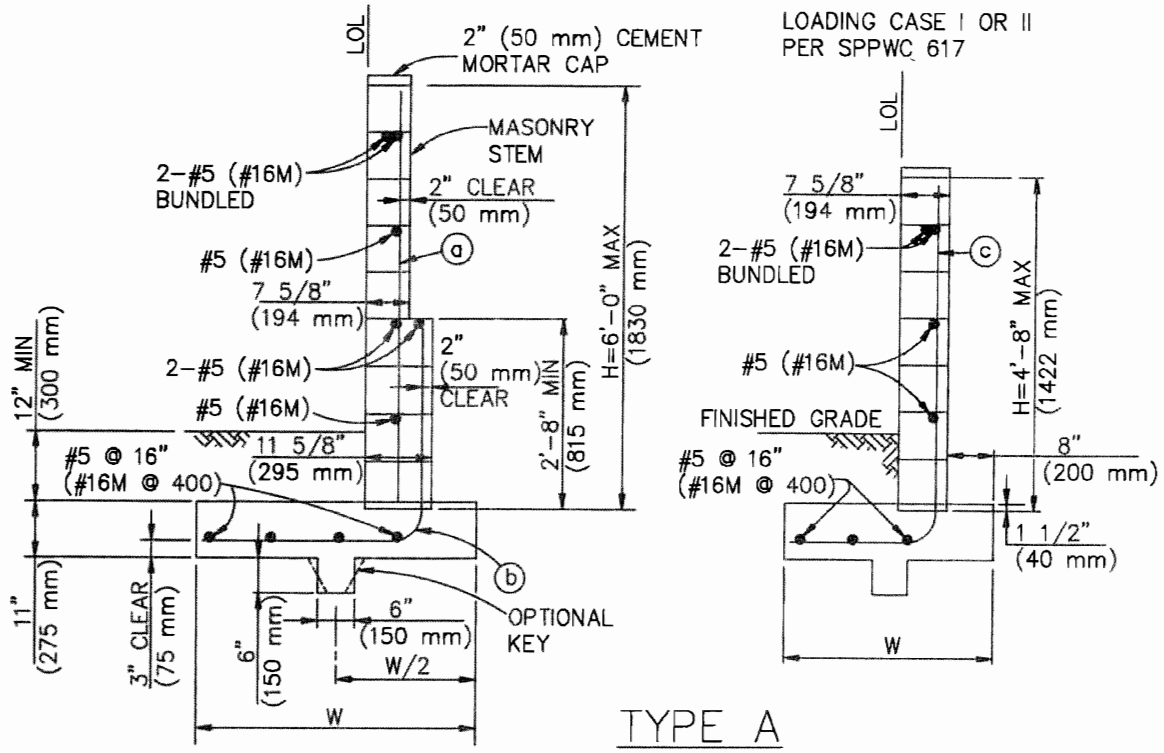

TYPE A

NO SPLICES ALLOWED IN (a), (b), OR (c) BARS

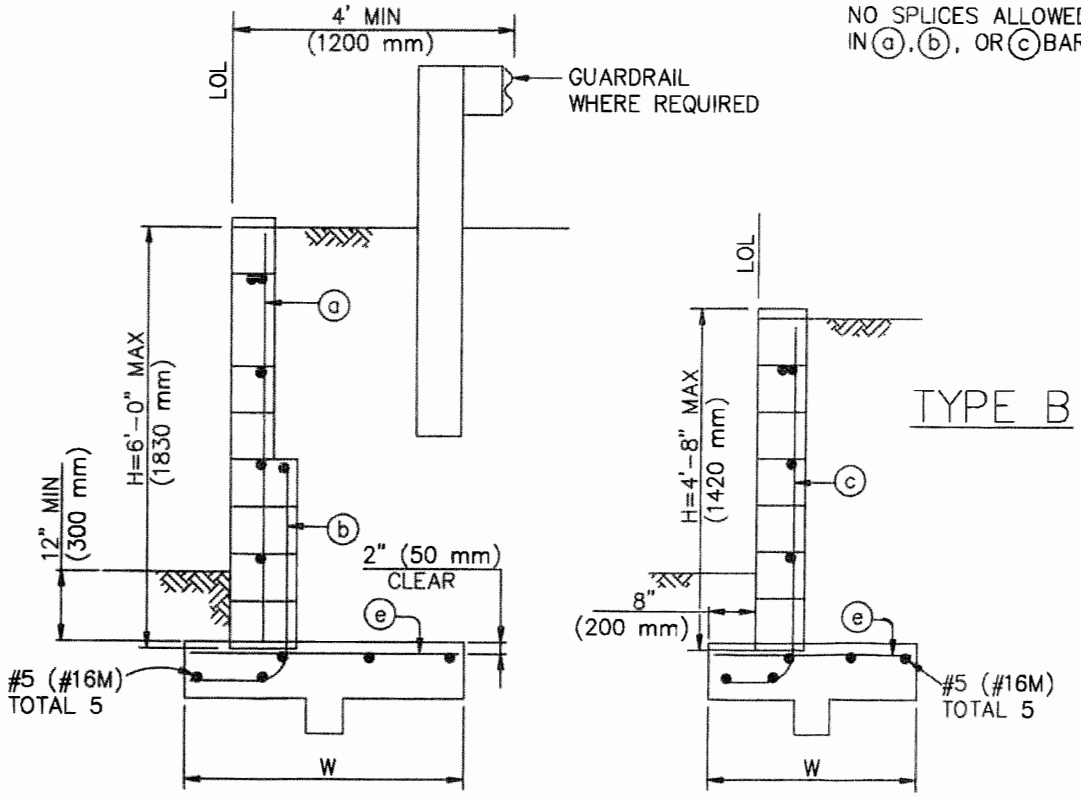

TYPE B

SIMILAR TO CALTRANS TYPE 6

STANDARD PLANS FOR PUBLIC WORKS CONSTRUCTION

PROMULGATED BY THE PUBLIC WORKS STANDARDS INC. GREENBOOK COMMITTEE 1993 REV. 1996, 2005, 2009

MASONRY RETAINING WALL

USE WITH STANDARD SPECIFICATIONS FOR PUBLIC WORKS CONSTRUCTION

STANDARD PLAN 618–3

SHEET 1 OF 3

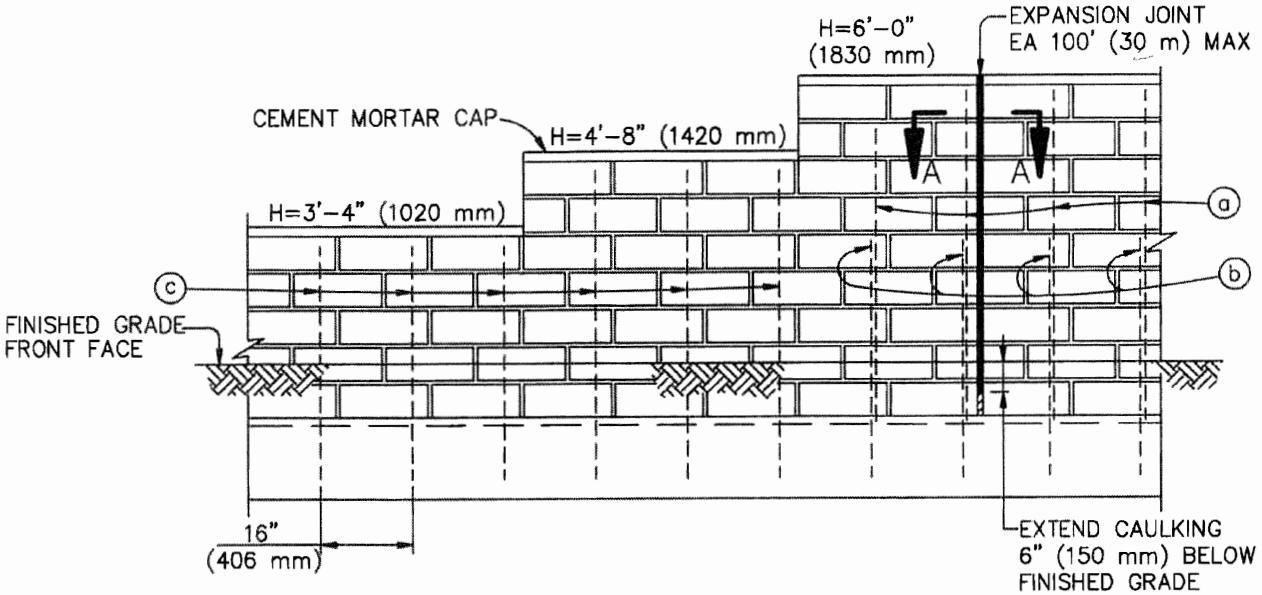

OMIT MORTAR FROM VERTICAL JOINT IN FIRST COURSE ABOVE FINISHED GRADE AT 2'-8" (813 mm) CENTERS FOR WEEP HOLES. FILL ALL CELLS WITH GROUT.

ELEVATION

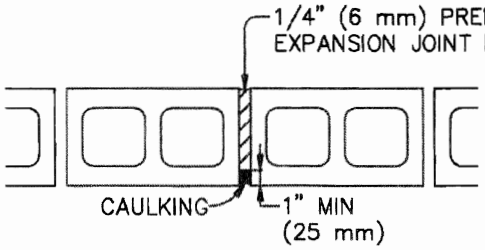

SECTION A–A

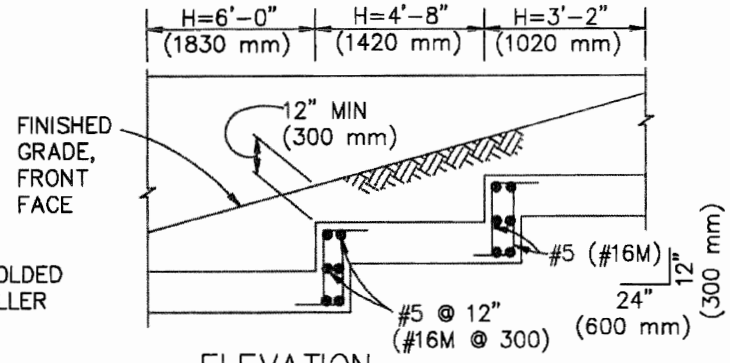

ELEVATION

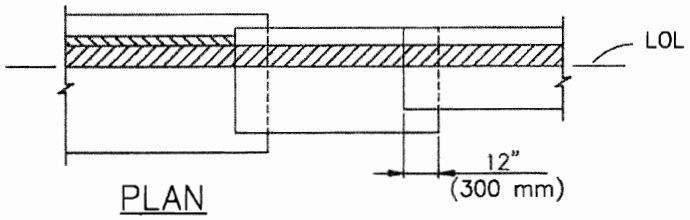

PLAN

FOOTING STEP DETAILS

STANDARD PLANS FOR PUBLIC WORKS CONSTRUCTION	STANDARD PLAN
MASONRY RETAINING WALL	**618–3**
	SHEET 2 OF 3

TYPE A WALL

DESIGN H	3'–4" (1020)	4'–0" (1220)	4'–8" (1420)	5'–4" (1630)	6'–0" (1830)
W	3'–2" (1000 mm)	3'–6" (1100)	3'–10" (1200)	4'–2" (1300)	4'–6" (1400)
ⓐ BARS	———	———	———	#5 @ 16" (#16M @ 406)	#5 @ 16" (#16M @ 406)
ⓑ BARS	———	———	———	#5 @ 16" (#16M @ 406)	#5 @ 16" (#16M @ 406)
ⓒ BARS	#5 @ 16" (#16M @ 406)	#5 @ 16" (#16M @ 406)	#5 @ 16" (#16M @ 406)	———	———

TYPE B WALL

DESIGN H	3'–4" (1020 mm)	4'–0" (1220)	4'–8" (1420)	5'–4" (1630)	6'–0" (1830)
W	2'–8" (850)	3'–0" (950)	3'–4" (1050)	3'–8" (1150)	4'–0" (1250)
ⓐ BARS	———	———	———	#5 @ 15" (#16M @ 375)	#5 @ 15" (#16M @ 375)
ⓑ BARS	———	———	———	#5 @ 15" (#16M @ 375)	#5 @ 15" (#16M @ 375)
ⓒ BARS	#5 @ 15" (#16M @ 375)	#5 @ 15" (#16M @ 375)	#5 @ 15" (#16M @ 375)	———	———
ⓔ BARS	#5 @ 15" (#16M @ 375)	#5 @ 15" (#16M @ 375)	#5 @ 15" (#16M @ 375)	#5 @ 15" (#16M @ 375)	#5 @ 12" (#16M @ 300)

DESIGN DATA (SEE SPPWC 617 FOR PCC, STEEL, AND OTHER SOIL DATA)

f_m = 500 psi (3.5 MPa) f'_m = 1500 psi (10.5 MPa)

REQUIRED SOIL BEARING CAPACITY 2000 psf (95 kPa)

NOTES:

1. SEE SPPWC 617 FOR STANDARD WALL DETAILS.
2. METRIC REINFORCING BAR SPACING IS IN MILLIMETERS.

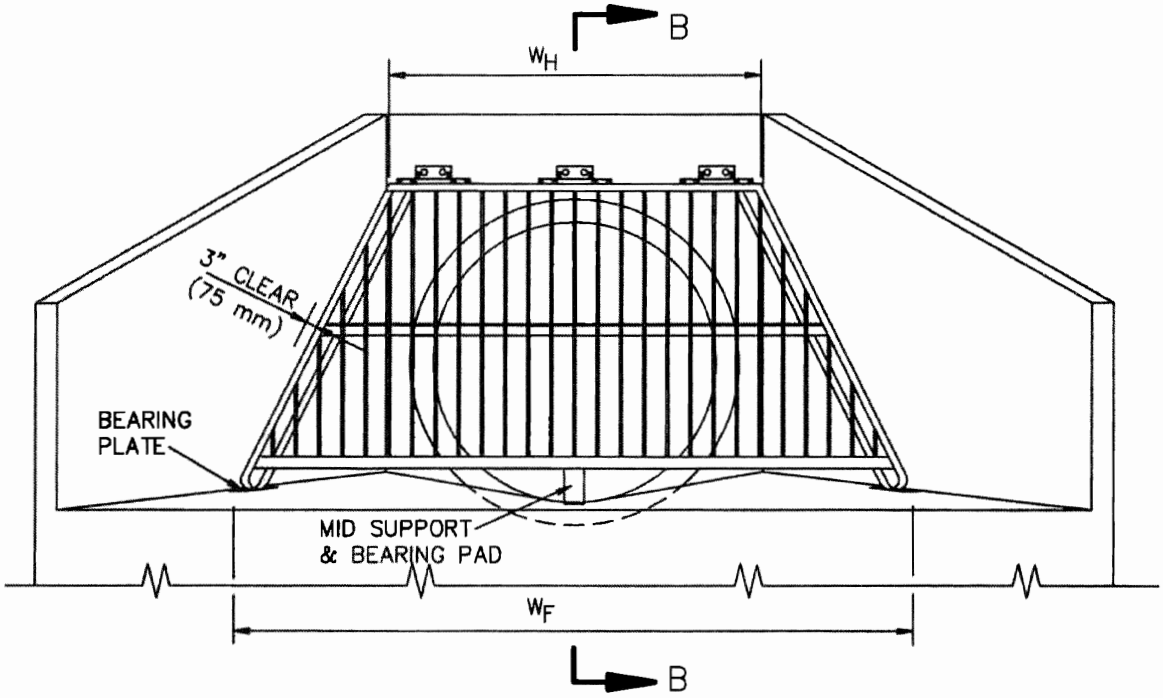

TRAPEZOIDAL OUTLET BARRIER FOR RCP

FOR TRAPEZOIDAL OUTLET BARRIERS, USE W_H TO DETERMINE NUMBER AND SIZE OF HINGES AND USE W_F TO DETERMINE REQUIRED FRAME MEMBER SIZES.

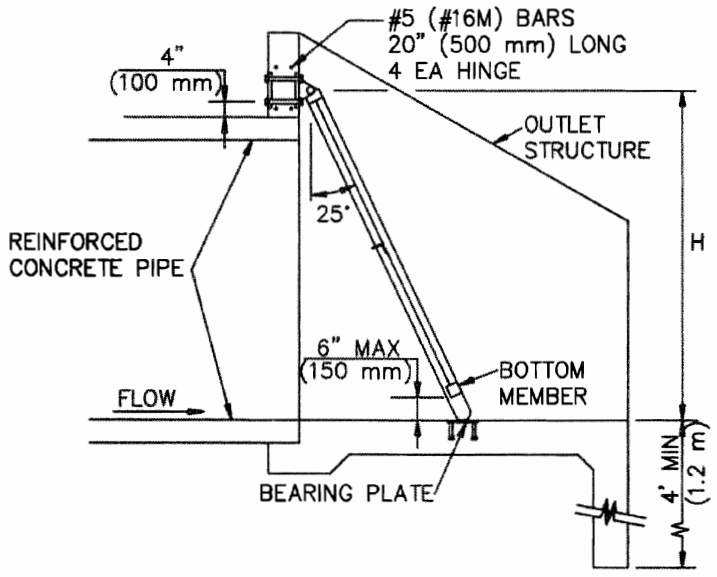

SECTION B–B

STANDARD PLANS FOR PUBLIC WORKS CONSTRUCTION	STANDARD PLAN
SLOPED PROTECTION BARRIER	**360–2**
	SHEET 2 OF 8

SLOPED PROTECTION BARRIER

STANDARD PLANS FOR PUBLIC WORKS CONSTRUCTION

STANDARD PLAN 360-2

SHEET 3 OF 8

TABLE 1 – STANDARD INLET/OUTLET

BOX SIZE, W x H	VERTICAL BARS, (mm)	TOP MEMBER	SIDE MEMBERS	BOTTOM MEMBER
4'x4' (1.2 x 1.2 m)	1"x1/2" (25 x 13)	C 4x7.25 (C 102 x 10.8)	C 4x7.25 (C 102 x 10.8)	TS 2x2x0.250 (TS 51 x 51 x 6)
4'x6' (1.2 x 1.8)	2"x1/2" (51 x 13)	C 4x7.25 (C 102 x 10.8)	C 4x7.25 (C 102 x 10.8)	TS 2x2x0.250 (TS 51 x 51 x 6)
4'x8' (1.2 x 2.4)	3"x1/2" (76 x 13)	C 5x9 (C 127 x 13.4)	C 5x9 (C 127 x 13.4)	TS 3x3x0.250 (TS 76 x 76 x 6)
6'x4' (1.8 x 1.2)	1"x1/2" (25 x 13)	C 4x7.25 (C 102 x 10.8)	C 4x7.25 (C 102 x 10.8)	TS 2x2x0.250 (TS 51 x 51 x 6)
6'x6' (1.8 x 1.8)	2"x1/2" (51 x 13)	C 4x7.25 (C 102 x 10.8)	C 4x7.25 (C 102 x 10.8)	TS 2.5x2.5x0.250 (TS 64 x 64 x 6)
6'x8' (1.8 x 2.4)	3"x1/2" (76 x 13)	C 5x9 (C 127 x 13.4)	C 5x9 (C 127 x 13.4)	TS 3.5x3.5x0.250 (TS 89 x 89 x 6)
6'x10' (1.8 x 3.0)	4 1/2"x1/2" (114 x 13)	C 6x10.5 (C 152 x 15.6)	C 6x10.5 (C 152 x 15.6)	TS 4.5x4.5x0.250 (TS 114 x 114 x 6)
8'x4' (2.4 x 1.2)	1"x1/2" (25 x 13)	C 4x7.25 (C 102 x 10.8)	C 4x7.25 (C 102 x 10.8)	TS 2x2x0.250 (TS 51 x 51 x 6)
8'x6' (2.4 x 1.8)	2"x1/2" (51 x 13)	C 4x7.25 (C 102 x 10.8)	C 4x7.25 (C 102 x 10.8)	TS 2.5x2.5x0.250 (TS 64 x 64 x 6)
8'x8' (2.4 x 2.4)	3"x1/2" (76 x 13)	C 5x9 (C 127 x 13.4)	C 5x9 (C 127 x 13.4)	TS 3x3x0.250 (TS 76 x 76 x 6)
8'x10' (2.4 x 3.0)	4 1/2"x1/2" (114 x 13)	C 6x10.5 (C 152 x 15.6)	C 6x10.5 (C 152 x 15.6)	TS 4.5x4.5x0.250 (TS 114 x 114 x 6)
10'x6' (3.0 x 1.8)	2"x1/2" (51 x 13)	C 4x7.25 (C 102 x 10.8)	C 4x7.25 (C 102 x 10.8)	TS 2.5x2.5x0.250 (TS 64 x 64 x 6)
10'x8' (3.0 x 2.4)	3"x1/2" (76 x 13)	C 5x9 (C 127 x 13.4)	C 5x9 (C 127 x 13.4)	TS 3.5x3.5x0.250 (TS 89 x 89 x 6)
10'x10' (3.0 x 3.0)	4 1/2"x1/2" (114 x 13)	C 6x10.5 (C 152 x 15.6)	C 6x10.5 (C 152 x 15.6)	TS 4.5x4.5x0.250 (TS 114 x 114 x 6)
12'x6' (3.6 x 1.8)	2"x1/2" (51 x 13)	C 5x9 (C 127 x 13.4)	C 5x9 (C 127 x 13.4)	TS 3x3x0.250 (TS 76 x 76 x 6)
12'x8' (3.6 x 2.4)	3"x1/2" (76 x 13)	C 5x9 (C 127 x 13.4)	C 5x9 (C 127 x 13.4)	TS 3.5x3.5x0.250 (TS 89 x 89 x 6)
12'x10' (3.6 x 3.0)	4 1/2"x1/2" (114 x 13)	C 6x10.5 (C 152 x 15.6)	C 6x10.5 (C 152 x 15.6)	TS 4.5x4.5x0.250 (TS 114 x 114 x 6)
14'x6' (4.2 x 1.8)	2"x1/2" (51 x 13)	C 5x9 (C 127 x 13.4)	C 5x9 (C 127 x 13.4)	TS 3x3x0.250 (TS 76 x 76 x 6)
14'x8' (4.2 x 2.4)	3"x1/2" (76 x 13)	C 6x10.5 (C 152 x 15.6)	C 6x10.5 (C 152 x 15.6)	TS 4x4x0.250 (TS 102 x 102 x 6)
14'x10' (4.2 x 3.0 m)	4 1/2"x1/2" (114 x 13)	C 7x12.25 (C 178 x 18.2)	C 7x12.25 (C 178 x 18.2)	TS 5x5x0.250 (TS 127 x 127 x 6)

TABLE 2 – OCEAN OUTLET

BOX SIZE, W x H	VERTICAL BARS, (mm)	TOP MEMBER	SIDE MEMBERS	BOTTOM MEMBER
4'x4' (1.2 x 1.2 m)	2 1/2"x5/8" (64 x 16)	C 5x9 (C 127 x 13.4)	C 5x9 (C 127 x 13.4)	TS 3x3x0.250 (TS 76 x 76 x 6)
4'x6' (1.2 x 1.8)	3 3/4"x5/8" (95 x 16)	C 6x13 (C 152 x 19.3)	C 6x8.2 (C 152 x 15.2)	TS 4x2x0.313 (TS 102 x 51 x 8)
4'x8' (1.2 x 2.4)	5 1/4"x5/8" (133 x 16)	C 8x18.75 (C 203 x 27.9)	C 8x11.5 (C 203 x 17.1)	TS 6x2x0.250 (TS 152 x 51 x 6)
6'x4' (1.8 x 1.2)	2 1/2"x5/8" (64 x 16)	C 6x13 (C 152 x 19.3)	C 6x8.2 (C 152 x 15.2)	TS 4x3x0.313 (TS 102 x 76 x 8)
6'x6' (1.8 x 1.8)	3 3/4"x5/8" (95 x 16)	C 6x13 (C 152 x 19.3)	C 6x8.2 (C 152 x 15.2)	TS 4x4x0.500 (TS 102 x 102 x 13)
6'x8' (1.8 x 2.4)	5 1/4"x5/8" (133 x 16)	C 8x18.75 (C 203 x 27.9)	C 8x11.5 (C 203 x 17.1)	TS 6x4x0.375 (TS 152 x 102 x 1)
6'x10' (1.8 x 3.0)	6 1/2"x5/8" (165 x 16)	C 9x20 (C 229 x 29.8)	C 9x13.4 (C 229 x 19.9)	TS 7x4x0.375 (TS 178 x 102 x 10)
8'x4' (2.4 x 1.2)	2 1/2"x5/8" (64 x 16)	C 5x9 (C 127 x 13.4)	C 5x9 (C 127 x 13.4)	TS 3x3x0.250 (TS 76 x 76 x 6)
8'x6' (2.4 x 1.8)	3 3/4"x5/8" (95 x 16)	C 6x13 (C 152 x 19.3)	C 6x8.2 (C 152 x 15.2)	TS 4x3x0.250 (TS 102 x 76 x 6)
8'x8' (2.4 x 2.4)	5 1/4"x5/8" (133 x 16)	C 8x18.75 (C 203 x 27.9)	C 8x11.5 (C 203 x 17.1)	TS 6x2x0.250 (TS 152 x 51 x 6)
8'x10' (2.4 x 3.0)	6 1/2"x5/8" (165 x 16)	C 9x20 (C 229 x 29.8)	C 9x13.4 (C 229 x 19.9)	TS 7x3x0.250 (TS 178 x 76 x 6)
10'x6' (3.0 x 1.8)	3 3/4"x5/8" (95 x 16)	C 6x13 (C 152 x 19.3)	C 6x8.2 (C 152 x 15.2)	TS 4x4x0.313 (TS 102 x 102 x 8)
10'x8' (3.0 x 2.4)	5 1/4"x5/8" (133 x 16)	C 8x18.75 (C 203 x 27.9)	C 8x11.5 (C 203 x 17.1)	TS 6x4x0.313 (TS 152 x 102 x 8)
10'x10' (3.0 x 3.0)	6 1/2"x5/8" (165 x 16)	C 9x20 (C 229 x 29.8)	C 9x13.4 (C 229 x 19.9)	TS 7x3x0.313 (TS 178 x 76 x 8)
12'x6' (3.6 x 1.8)	3 3/4"x5/8" (95 x 16)	C 7x14.75 (C 178 x 22.0)	C 7x9.8 (C 178 x 14.6)	TS 5x4x0.313 (TS 127 x 102 x 8)
12'x8' (3.6 x 2.4)	5 1/4"x5/8" (133 x 16)	C 8x18.75 (C 203 x 27.9)	C 8x11.5 (C 203 x 17.1)	TS 6x4x0.375 (TS 152 x 102 x 10)
12'x10' (3.6 x 3.0)	6 1/2"x5/8" (165 x 16)	C 9x20 (C 229 x 29.8)	C 9x13.4 (C 229 x 19.9)	TS 7x4x0.375 (TS 178 x 102 x 10)
14'x6' (4.2 x 1.8)	3 3/4"x5/8" (95 x 16)	C 8x18.75 (C 203 x 27.9)	C 8x11.5 (C 203 x 17.1)	TS 6x4x0.375 (TS 152 x 102 x 10)
14'x8' (4.2 x 2.4)	5 1/4"x5/8" (133 x 16)	C 8x18.75 (C 203 x 27.9)	C 8x11.5 (C 203 x 17.1)	TS 6x6x0.375 (TS 152 x 512 x 10)
14'x10' (4.2 x 3.0 m)	6 1/2"x5/8" (165 x 16)	C 9x20 (C 229 x 29.8)	C 9x13.4 (C 229 x 19.9)	TS 7x5x0.500 (TS 178 x 127 x 13)

TABLE 3 – HINGES		
BOX SIZE, W x H	NO. OF HINGES	HINGE SIZE
4'x4' (1.2 x 1.2 m)	2	12" (300)
4'x6' (1.2 x 1.8)	2	12" (300)
4'x8' (1.2 x 2.4)	2	12" (300)
6'x4' (1.8 x 1.2)	2	18" (450)
6'x6' (1.8 x 1.8)	2	18" (450)
6'x8' (1.8 x 2.4)	2	18" (450)
6'x10' (1.8 x 3.0)	2	18" (450)
8'x4' (2.4 x 1.2)	3	12" (300)
8'x6' (2.4 x 1.8)	3	12" (300)
8'x8' (2.4 x 2.4)	3	12" (300)
8'x10' (2.4 x 3.0)	3	12" (300)
10'x6' (3.0 x 1.8)	3	18" (450)
10'x8' (3.0 x 2.4)	3	18" (450)
10'x10' (3.0 x 3.0)	3	18" (450)
12'x6' (3.6 x 1.8)	3	24" (600)
12'x8' (3.6 x 2.4)	3	24" (600)
12'x10' (3.6 x 3.0)	3	24" (600)
14'x6' (4.2 x 1.8)	3	24" (600)
14'x8' (4.2 x 2.4)	3	24" (600)
14'x10' (4.2 x 3.0 m)	3	24" (600)

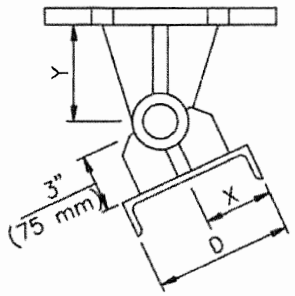

TABLE 4 – HINGE CLEARANCES (mm)		
D	X	Y
4" (10)	2" (50)	3" (75)
5" (127)	2 1/2" (65)	3 1/2" (90)
6" (152)	3" (75)	4" (100)
7" (178)	3 1/2" (90)	4 1/2" (115)
8" (203)	4" (100)	5" (125)
9" (229)	4" (100)	5" (125)

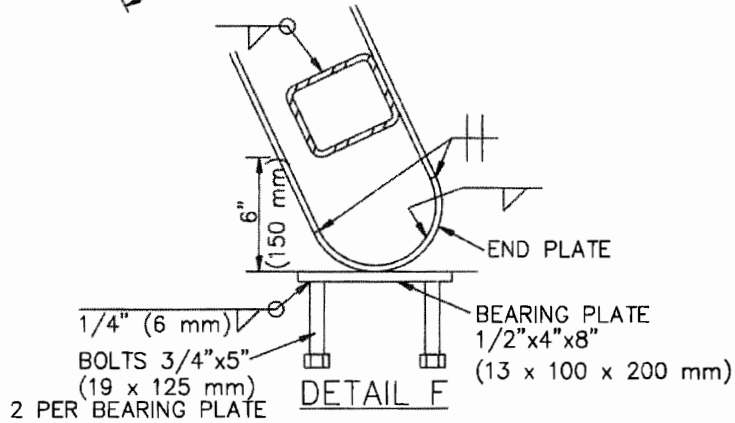

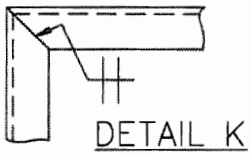
DETAIL K

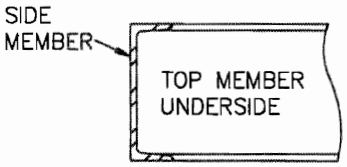

SECTION C–C

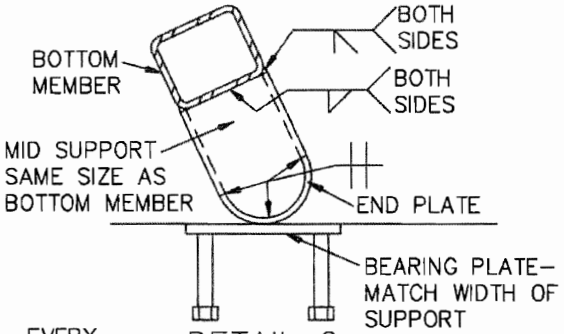

DETAIL G

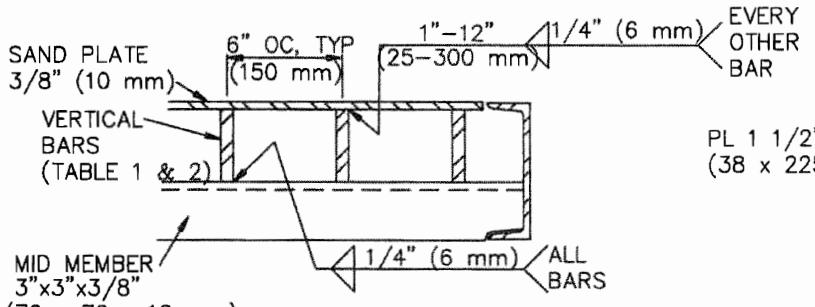

SECTION D–D

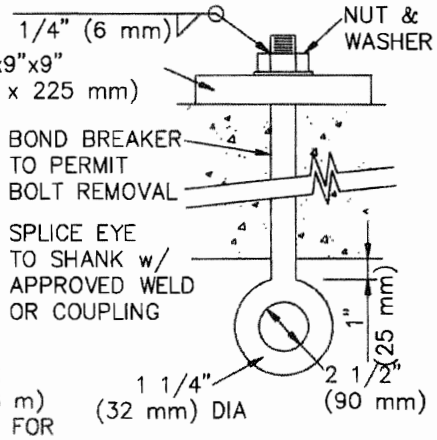

DETAIL J

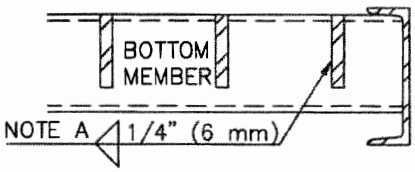

SECTION E–E

NOTE A:
WELDS 1" (25 mm) FOR
H = 4' & 6' (1.2 & 1.8 m)
WELDS 1 1/2" (40 mm) FOR
H = 8' & 10' (2.4 & 3.0 m)

STANDARD PLANS FOR PUBLIC WORKS CONSTRUCTION

SLOPED PROTECTION BARRIER

STANDARD PLAN
360–2
SHEET 4 OF 8

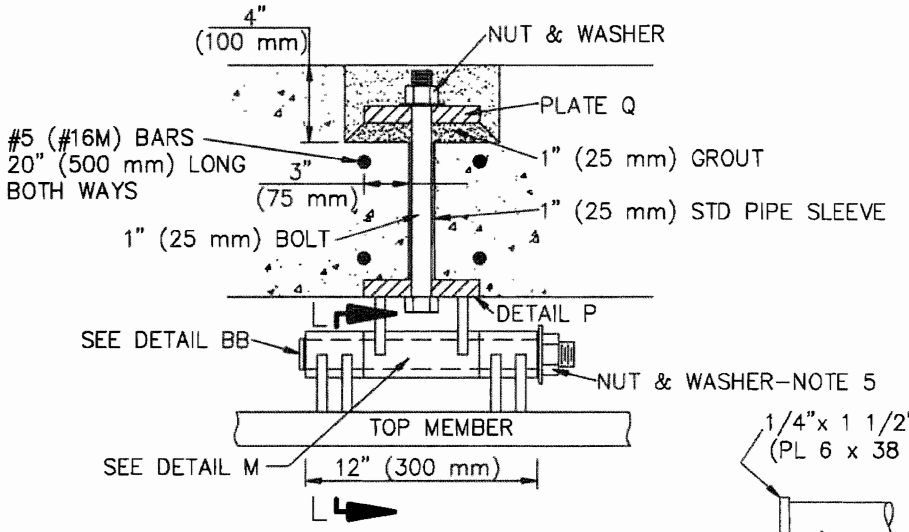

12" (300 mm) HINGE

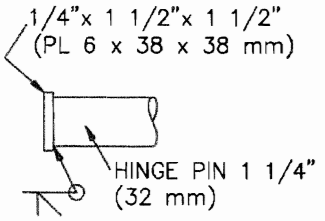

DETAIL BB

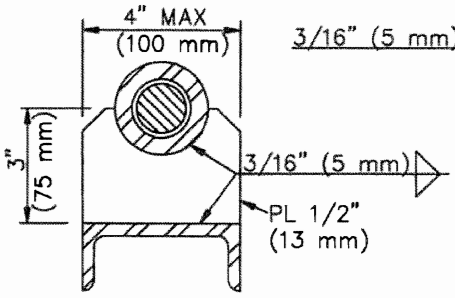

SECTION L-L

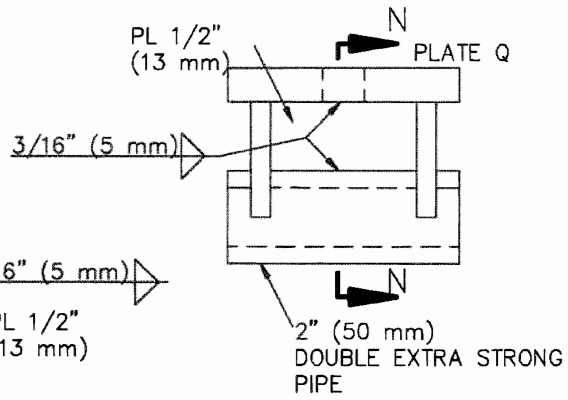

DETAIL M

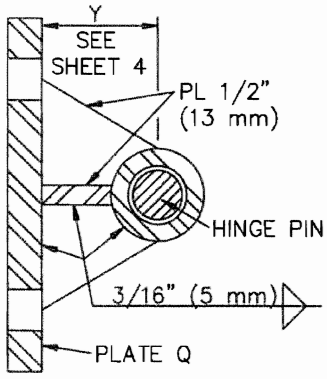

SECTION N-N

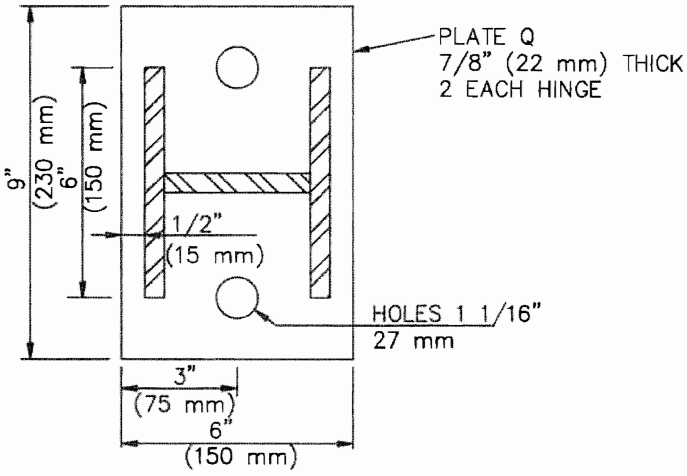

DETAIL P

STANDARD PLANS FOR PUBLIC WORKS CONSTRUCTION

SLOPED PROTECTION BARRIER

STANDARD PLAN
360-2
SHEET 5 OF 8

NOTES:

1. SUBMIT FABRICATION ("SHOP") DRAWINGS FOR APPROVAL PER SSPWC 2-5.3.3.
2. WHENEVER THE REINFORCED CONCRETE BOX SIZE FALLS BETWEEN SIZES SHOWN IN THE TABLES, USE THE HINGE AND MEMBER SIZING FOR THE LARGER BOX SIZE SHOWN.
3. FRAME MEMBERS SHALL BE ASTM A 36 STEEL OR BETTER.
4. HINGE ASSEMBLIES AND BEARING PADS SHALL BE STAINLESS STEEL.
5. MAKE NECESSARY MODIFICATIONS TO ALLOW THE SIMPLE REMOVAL OR INSERTION OF HINGE PINS FOR INSTALLATION OR REMOVAL OF THE PROTECTION BARRIER. THREAD THE END OF HINGE PINS SO THAT NUTS AND LOCK WASHERS ARE FLUSH WITH THE HINGE SLEEVE PIPE. DAMAGE THE THREADS BEYOND THE NUT FACE TO PREVENT LOOSENING. SEE ALSO ALTERNATE DETAIL BELOW.
6. GALVANIZE FRAME MEMBERS AFTER FABRICATION.
7. MINIMIZE OR ELIMINATE WELDING AFTER GALVANIZING. REPAIR POST-FABRICATION WELDS IN ACCORDANCE WITH SSPWC 210-3.5.
8. INSTALL A MID SUPPORT FOR BARRIERS WITH THREE HINGES.
9. INSTALL SAND PLATES AT OCEAN OUTLETS.
10. DESIGN LOADS:
    A. INLET/OUTLET BARRIER: BULKED EQUIVALENT FLUID DENSITY = 85 PCF
    B. OCEAN OUTLET:
        1. 1,800 PSF (86 kPa) OVER SAND PLATE AREA
        2. 600 PSF (29 kPa) OVER LOWER OPEN AREA

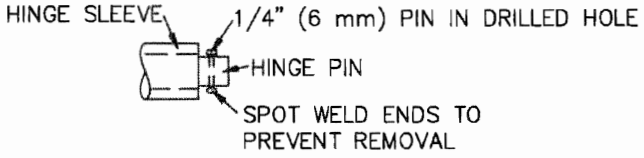

ALTERNATE HINGE PIN ATTACHMENT

USE ONLY WHERE APPROVED

STANDARD PLANS FOR PUBLIC WORKS CONSTRUCTION	STANDARD PLAN 360-2 SHEET 8 OF 8
SLOPED PROTECTION BARRIER	

APPENDIX IV

CONSTRUCTION AND DEMOLITION DEBRIS RECYCLING SUMMARY

CONSTRUCTION AND DEMOLITION DEBRIS RECYCLING SUMMARY

Project Type: ☐ Roadway and/or Bridge/Structure ☐ Water/Sewer
☐ Traffic Signal/Street Lighting ☐ Other _____

Project Name: _____ Date: _____

City Contract No: _____

Project Location: _____

Thomas Guide Page/Grid No(s): _____

Contractor Name: _____

Contractor Address: _____

Contractor License #: _____

Project Duration: From: _____ To: _____

Demolition and Recycling Cost: $ _____

Type(s) of Debris Generated	Total Quantity Generated (tons, c.y. or units)	Reuse /Recycling		Disposal	
		Total Quantity (tons, c.y. or units)	Name of Reuse/Recycling Facility/Site	Total Quantity (tons, c.y. or units)	Name of Disposal Facility
Asphalt					
Brick					
Concrete					
Green Waste					
Metal (ferrous)					
Metal (non-ferrous)					
Mixed Debris					
Rock					
Soil					
Wood Waste					
Other					
Total					

Notes:

- Other debris types may include, but are not limited to, Ash, Cardboard, Carpeting, Glass, Gravel, Land Clearing Debris, Non-friable Asbestos, Paper, Plastic, Porcelain, Roofing Material, Sand, and Tires. Attach additional sheets if necessary.
- If the debris is taken to a transfer station solely for the purpose of reuse/recycling, then list the transfer station as the reuse/recycling facility/site.
- If the debris is taken to a transfer station solely for the purpose of transfer to a disposal facility, then list the transfer station as the disposal facility.

Prepared by _____ Signature _____ Phone # _____

APPENDIX V

CAL TRANS STANDARD PLANS

SPAN, S	4'						5'							
HEIGHT, H	2'		3'		4'		2'		3'		4'		5'	
MAXIMUM EARTH COVER	10'	20'	10'	20'	10'	20'	10'	20'	10'	20'	10'	20'	10'	20'
Conc ROOF T_1	7"	7½"	7"	7½"	7"	7½"	7"	9"	7"	9"	7"	9"	7"	9"
Conc WALLS T_2	6"	6½"	6½"	7"	7"	8"	6"	6½"	6½"	7½"	7½"	8"	8"	9½"
Conc INVERT T_3	7"	7½"	7"	7½"	7"	7½"	7½"	9"	7½"	9"	8"	9"	8"	9"
Reinf SPACING	12"	12"	12"	12"	12"	12"	11½"	12"	11½"	12"	11½"	12"	11½"	12"
Reinf "g" SIZE BAR	#4	#7	#4	#7	#4	#7	#4	#7	#4	#7	#4	#7	#4	#7
Reinf "f" SIZE BAR	#5	#5	#5	#5	#5	#5	#5	#5	#5	#5	#5	#5	#5	#5
Reinf "d" SIZE BAR	#6	#4	#6	#4	#6	#4	#6	#4	#6	#4	#6	#4	#6	#4
Reinf "e" SIZE BAR	#4	#4	#4	#5	#5	#6	#4	#4	#4	#5	#5	#6	#5	#7
QUANTITIES CONCRETE CF/LF	14.1	15.1	15.9	17.1	17.9	19.6	16.9	20.5	18.8	22.9	21.1	25.1	24.0	28.5
QUANTITIES REINFORCEMENT LB/LF	109	109	115	122	130	141	133	130	139	145	156	164	163	192
** SOIL PRESSURE (ksf)	2.1	4.1	2.2	4.1	2.2	4.1	3.2	4.1	3.2	4.1	3.2	4.1	3.3	4.2

SPAN, S	6'								7'									
HEIGHT, H	3'		4'		5'		6'		3'		4'		5'		6'		7'	
MAXIMUM EARTH COVER	10'	20'	10'	20'	10'	20'	10'	20'	10'	20'	10'	20'	10'	20'	10'	20'	10'	20'
Conc ROOF T_1	7"	10½"	7"	10½"	7"	10½"	7"	10½"	7½"	11½"	7½"	11½"	7½"	11½"	7½"	11½"	8"	11½"
Conc WALLS T_2	6½"	7½"	7"	8½"	7½"	10"	8½"	11"	6½"	7½"	7½"	8"	7½"	9½"	8½"	11"	9½"	13"
Conc INVERT T_3	8½"	10½"	8½"	10½"	8½"	10½"	8½"	10½"	9½"	12"	9½"	12"	9½"	12"	9½"	12"	9½"	12"
Reinf SPACING	11½"	12"	11½"	12"	11½"	12"	11½"	12"	11"	10½"	11"	10½"	11"	10½"	11"	10½"	11"	10½"
Reinf "g" SIZE BAR	#6	#7	#6	#7	#6	#7	#6	#7	#6	#7	#6	#7	#6	#7	#6	#7	#6	#7
Reinf "f" SIZE BAR	#5	#5	#5	#5	#5	#6	#5	#6	#6	#5	#6	#5	#6	#6	#6	#6	#6	#6
Reinf "d" SIZE BAR	#7	#4	#7	#4	#7	#4	#7	#4	#6	#4	#6	#4	#6	#4	#6	#4	#6	#4
Reinf "e" SIZE BAR	#4	#5	#5	#6	#6	#6	#6	#7	#4	#5	#5	#6	#6	#6	#6	#7	#6	#7
QUANTITIES CONCRETE CF/LF	22.3	29.3	24.3	32.0	26.5	35.6	29.5	38.5	26.8	36.1	29.3	38.3	31.1	41.9	34.0	46.0	38.0	51.3
QUANTITIES REINFORCEMENT LB/LF	202	167	218	188	239	213	250	243	237	209	254	232	275	262	287	298	299	317
** SOIL PRESSURE (ksf)	3.1	4.1	3.1	4.2	3.1	4.2	3.1	4.2	3.0	4.1	3.0	4.2	3.0	4.2	3.0	4.2	3.1	4.3

SPAN, S	8'									
HEIGHT, H	4'		5'		6'		7'		8'	
MAXIMUM EARTH COVER	10'	20'	10'	20'	10'	20'	10'	20'	10'	20'
Conc ROOF T_1	8½"	13"	8½"	13"	8½"	13"	8½"	13"	8½"	13"
Conc WALLS T_2	6½"	8"	7½"	9½"	8½"	11½"	9½"	13"	11"	15"
Conc INVERT T_3	10½"	13½"	10½"	13½"	10½"	13½"	10½"	13½"	10½"	13½"
Reinf SPACING	9"	10"	9"	10"	9"	10"	9"	10"	9"	10"
Reinf "g" SIZE BAR	#7	#7	#7	#7	#7	#7	#7	#7	#7	#7
Reinf "f" SIZE BAR	#5	#6	#5	#6	#5	#6	#5	#6	#5	#6
Reinf "d" SIZE BAR	#6	#4	#6	#4	#6	#4	#6	#4	#6	#4
Reinf "e" SIZE BAR	#5	#6	#5	#6	#6	#6	#6	#7	#6	#7
QUANTITIES CONCRETE CF/LF	34.2	46.7	36.9	50.4	39.9	55.2	43.2	59.9	47.[illegible]	66.0
QUANTITIES REINFORCEMENT LB/LF	334	287	345	301	376	317	390	359	406	378
** SOIL PRESSURE (ksf)	2.9	4.2	2.9	4.2	3.0	4.3	3.0	4.3	3.0	4.4

SPAN, S	10'											
HEIGHT, H	5'		6'		7'		8'		9'		10'	
MAXIMUM EARTH COVER	10'	20'	10'	20'	10'	20'	10'	20'	10'	20'	10'	20'
Conc ROOF T_1	10½"	15½"	10½"	15½"	10½"	15½"	10½"	15½"	10½"	15½"	10½"	15½"
Conc WALLS T_2	8½"	8½"	8½"	9½"	8½"	10½"	9"	12"	10"	13½"	11"	15"
Conc INVERT T_3	10½"	16"	10½"	16"	10½"	16"	10½"	16"	10½"	16"	10½"	16"
Reinf SPACING	11"	7½"	10½"	7½"	10"	8"	10"	8"	10½"	9"	10½"	8½"
Reinf "g" SIZE BAR	#7	#7	#7	#7	#7	#7	#7	#7	#7	#7	#7	#7
Reinf "f" SIZE BAR	#7	#6	#7	#6	#7	#6	#7	#6	#7	#6	#7	#6
Reinf "d" SIZE BAR	#4	#4	#4	#4	#4	#4	#4	#4	#4	#4	#4	#5
Reinf "b" SIZE BAR	#5	#5	#4	#5	#5	#5	#6	#5	#6	#6	#6	#6
Reinf "b" Dim "B" ft-inch	1-9	2-7	2-0	2-9	2-1	2-9	2-7	3-1	2-7	3-1	2-7	3-1
Reinf "b" Dim "Bw" ft-inch	4-0	4-11	4-0	4-11	4-0	4-11	4-0	4-11	4-0	4-11	4-0	4-11
Reinf "c" SIZE BAR	#5	#6	#6	#6	#6	#6	#6	#6	#7	#6	#7	#5
Reinf "c" Dim "C" ft-inch	3-1	2-9	3-9	3-3	4-6	4-3	5-6	4-6	6-0	4-9	6-0	4-9
* "e" SIZE BAR	#4	#4	#4	#4	#4	#4	#4	#4	#4	#4	#5	#5
QUANTITIES CONCRETE CF/LF	49.1	68.4	51.1	71.9	53.2	75.8	56.1	80.8	60.1	86.4	64.4	92.5
QUANTITIES REINFORCEMENT LB/LF	393	520	427	542	473	538	509	559	534	599	568	636
** SOIL PRESSURE (ksf)	2.8	4.8	2.8	4.9	2.9	4.9	2.9	4.9	2.9	4.9	2.9	5.0

SPAN, S	12'													
HEIGHT, H	6'		7'		8'		9'		10'		11'		12'	
MAXIMUM EARTH COVER	10'	20'	10'	20'	10'	20'	10'	20'	10'	20'	10'	20'	10'	20'
Conc ROOF T_1	11½"	18"	11½"	18"	11½"	18"	11½"	18"	11½"	18"	11½"	18"	11½"	18"
Conc WALLS T_2	8½"	9½"	8½"	10½"	9"	12"	10"	13½"	11"	15"	12½"	16½"	13½"	18½"
Conc INVERT T_3	12"	19"	12"	19"	12"	19"	12"	19"	12"	19"	12"	19"	12"	19"
Reinf SPACING	9"	8"	9"	8"	8"	7½"	8"	7½"	8½"	7½"	8½"	8"	8½"	8"
Reinf "g" SIZE BAR	#7	#7	#7	#7	#7	#7	#7	#7	#7	#7	#7	#7	#7	#7
Reinf "f" SIZE BAR	#7	#8	#7	#8	#7	#7	#7	#7	#7	#7	#7	#9	#7	#8
Reinf "d" SIZE BAR	#4	#4	#4	#4	#4	#4	#4	#4	#4	#4	#4	#4	#4	#4
Reinf "b" SIZE BAR	#5	#6	#5	#6	#6	#6	#6	#6	#6	#6	#5	#6	#6	#6
Reinf "b" Dim "B" ft-inch	2-7	3-1	3-0	3-2	3-6	3-2	3-6	3-4	3-9	3-4	3-9	3-4	3-9	3-4
Reinf "b" Dim "Bw" ft-inch	4-1	3-2	4-1	3-4	4-1	3-4	4-1	3-7	3-9	3-7	3-9	3-7	3-7	3-7
Reinf "c" SIZE BAR	#6	#6	#6	#6	#6	#6	#6	#6	#6	#6	#7	#7	#7	#7
Reinf "c" Dim "C" ft-inch	3-10	3-7	4-6	4-4	5-7	5-0	6-6	5-2	7-2	5-4	7-5	5-7	7-5	5-7
* "e" SIZE BAR	#4	#4	#4	#4	#4	#4	#4	#4	#4	#4	#5	#5	#5	#5
QUANTITIES CONCRETE CF/LF	63.6	94.4	65.7	98.4	68.6	104	72.6	109	76.9	115	82.6	127	87.7	131
QUANTITIES REINFORCEMENT LB/LF	563	686	584	711	691	721	715	745	700	764	767	867	804	890
** SOIL PRESSURE (ksf)	2.8	4.8	2.8	4.9	2.8	4.9	2.8	4.9	2.8	4.9	2.9	5.0	2.9	5.0

SPAN, S	14'															
HEIGHT, H	7'		8'		9'		10'		11'		12'		13'		14'	
MAXIMUM EARTH COVER	10'	20'	10'	20'	10'	20'	10'	20'	10'	20'	10'	20'	10'	20'	10'	20'
Conc ROOF T_1	13"	20½"	13"	20½"	13"	20½"	13"	20½"	13"	20½"	13"	20½"	13"	20½"	13"	20½"
Conc WALLS T_2	9"	11"	9"	12"	10"	13½"	11½"	15"	12½"	17"	13½"	18½"	15"	20"	16½"	22"
Conc INVERT T_3	13½"	21½"	13½"	21½"	13½"	21½"	13½"	21½"	13½"	21½"	13½"	21½"	13½"	21½"	13½"	21½"
Reinf SPACING	8½"	8"	8½"	8"	8½"	8"	8½"	8"	8½"	8"	8½"	8"	9"	8"	9"	8"
Reinf "g" SIZE BAR	#8	#8	#8	#8	#8	#8	#8	#8	#8	#8	#8	#8	#8	#8	#8	#8
Reinf "f" SIZE BAR	#7	#8	#7	#8	#7	#8	#7	#8	#7	#8	#7	#8	#7	#8	#7	#8
Reinf "d" SIZE BAR	#4	#5	#4	#4	#4	#4	#4	#4	#4	#4	#4	#4	#4	#4	#4	#4
Reinf "b" SIZE BAR	#5	#5	#6	#6	#5	#6	#6	#6	#6	#6	#6	#7	#7	#7	#7	#7
Reinf "b" Dim "B" ft-inch	2-7	2-7	3-3	3-3	4-0	4-0	4-0	4-0	4-7	4-4	4-7	4-11	5-3	4-11	5-3	4-11
Reinf "b" Dim "Bw" ft-inch	5-0	3-9	5-0	4-6	5-0	5-0	5-0	5-0	4-9	5-6	4-9	6-2	5-2	6-2	5-2	6-2
Reinf "c" SIZE BAR	#6	#6	#6	#7	#7	#7	#7	#7	#7	#7	#7	#7	#7	#7	#8	#8
Reinf "c" Dim "C" ft-inch	4-3	3-11	5-6	5-2	7-9	5-8	8-6	6-5	8-10	6-5	9-0	6-10	9-3	6-10	9-3	6-10
* "e" SIZE BAR	#4	#4	#4	#4	#4	#4	#4	#4	#4	#4	#5	#5	#5	#5	#6	#6
QUANTITIES CONCRETE CF/LF	88.8	124	84.0	129	88.0	134	93.4	141	98	149	103	156	110	164	117	174
QUANTITIES REINFORCEMENT LB/LF	734	878	785	919	842	956	892	985	916	1015	964	1120	980	1141	1095	1269
** SOIL PRESSURE (ksf)	2.8	4.8	2.8	4.9	2.8	4.9	2.8	4.9	2.8	5.0	2.9	5.0	2.9	5.0	2.9	5.1

* See Note 5
** See Note 9

"d" BARS, FOR EARTH COVERS UP TO AND INCLUDING 10'-0"								
SPAN	4'	5'	6'	7'	8'	10'	12'	14'
NUMBER	5	6	8	10	13	14	16	19

ROOF SECTION
SPANS 4' THRU 8'
INVERT SIMILAR

EXTERIOR WALL SECTION
SPANS 4' THRU 8'

TYPICAL SECTION
SPANS 4' THRU 8'

TYPICAL SECTION
SPANS 10' THRU 14'

NOTES:

1. For boxes with span or height less than any of those shown in table, use next greater size box concrete dimensions and reinforcement. Make necessary changes in bar lengths and quantities.
2. For boxes with span or height or cover greater than those shown in tables, a special design is required.
3. Quantities are approximate and for design purposes only.
4. It is permissible to eliminate the 180° hooks on every other "e" bar.
5. "e" bars are at half spacing.
6. Provide paving notch when top is exposed and when pavement is concrete, and adjust quantities.
7. For design and details not shown, see Standard Plan D82.
8. This plan sheet may be used for multiple cell culverts by making necessary adjustments.
9. Soil pressures shown are factored per AASHTO LRFD and include soil weight of fill over box, self weight of box and live load where applicable.

FLAT INVERT ALTERNATIVE

ROOF SECTION
SPANS 10' THRU 14'

EXTERIOR WALL SECTION
SPANS 10' THRU 14'

May 20, 2011

STATE OF CALIFORNIA
DEPARTMENT OF TRANSPORTATION

CAST-IN-PLACE REINFORCED CONCRETE DOUBLE BOX CULVERT

NO SCALE

D81

Return to Table of Contents

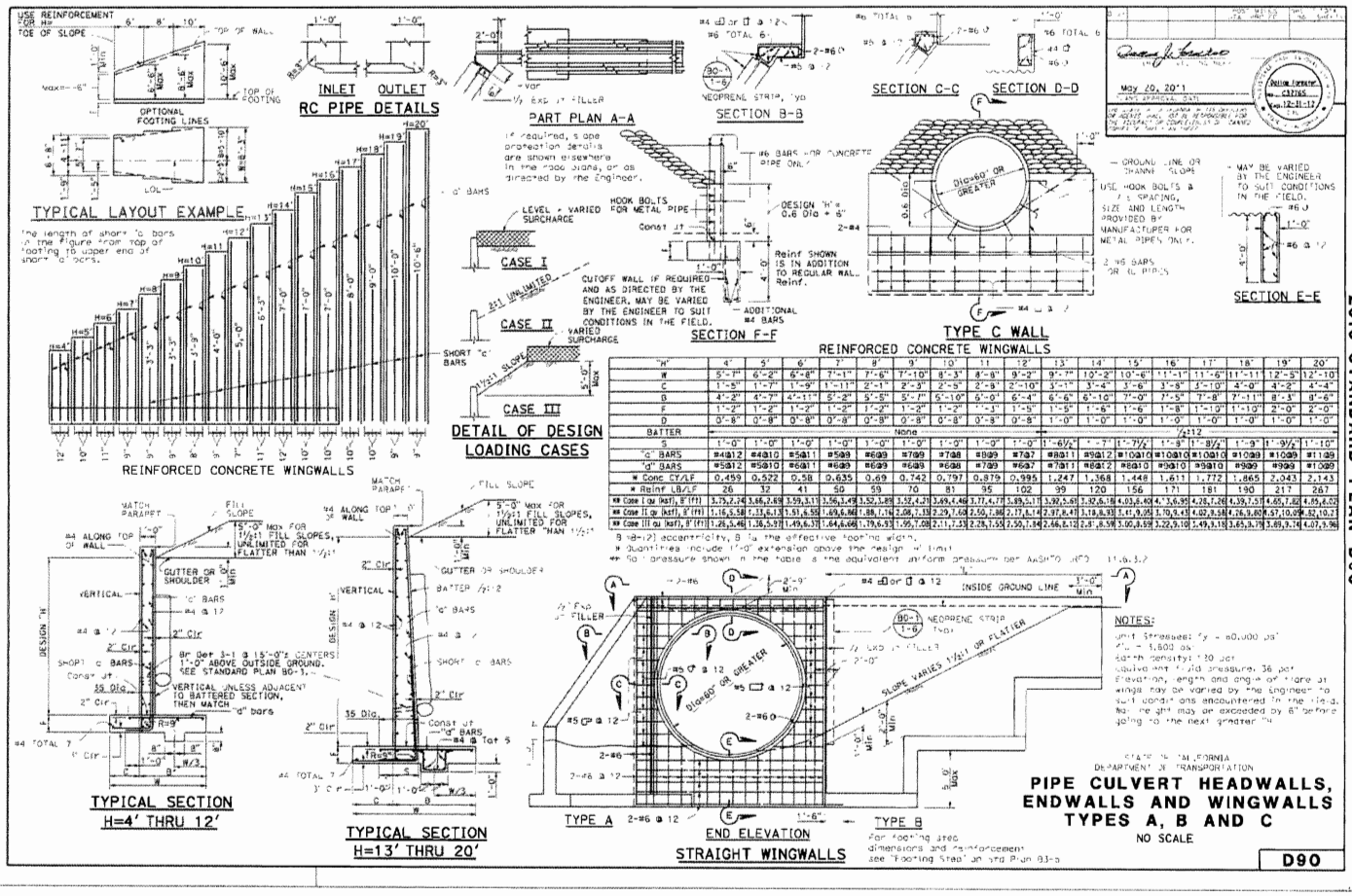

REINFORCED CONCRETE WINGWALLS

"H"	4'	5'	6'	7'	8'	9'	10'	11'	12'	13'	14'	15'	16'	17'	18'	19'	20'
W	5'-7"	6'-2"	6'-8"	7'-1"	7'-6"	7'-10"	8'-3"	8'-8"	9'-2"	9'-7"	10'-2"	10'-6"	11'-1"	11'-6"	11'-11"	12'-5"	12'-10"
C	1'-5"	1'-7"	1'-9"	1'-11"	2'-1"	2'-3"	2'-5"	2'-8"	2'-10"	3'-1"	3'-4"	3'-6"	3'-8"	3'-10"	4'-0"	4'-2"	4'-4"
B	4'-2"	4'-7"	4'-11"	5'-2"	5'-5"	5'-7"	5'-10"	6'-0"	6'-4"	6'-6"	6'-10"	7'-0"	7'-5"	7'-8"	7'-11"	8'-3"	8'-6"
F	1'-2"	1'-2"	1'-2"	1'-2"	1'-2"	1'-2"	1'-2"	1'-3"	1'-5"	1'-5"	1'-5"	1'-6"	1'-8"	1'-10"	1'-10"	2'-0"	2'-0"
D	0'-8"	0'-8"	0'-8"	0'-8"	0'-8"	0'-8"	0'-8"	0'-8"	0'-8"	1'-0"	1'-0"	1'-0"	1'-0"	1'-0"	1'-0"	1'-0"	1'-0"
BATTER	None									½:12							
S	1'-0"	1'-0"	1'-0"	1'-0"	1'-0"	1'-0"	1'-0"	1'-0"	1'-0"	1'-6½"	1'-7"	1'-7½"	1'-8"	1'-8½"	1'-9"	1'-9½"	1'-10"
"a" BARS	#4@12	#4@10	#5@11	#5@9	#6@9	#7@9	#7@8	#8@9	#7@7	#8@11	#5@12	#10@10	#10@10	#10@10	#10@9	#10@8	#11@9
"d" BARS	#5@12	#5@10	#6@11	#6@9	#6@9	#6@8	#6@8	#7@9	#6@7	#7@11	#6@12	#8@10	#9@10	#9@10	#9@9	#9@8	#10@9
※ Conc CY/LF	0.459	0.522	0.58	0.635	0.69	0.742	0.797	0.879	0.995	1.247	1.368	1.448	1.611	1.772	1.865	2.043	2.143
※ Reinf LB/LF	26	32	41	50	59	70	81	95	102	99	120	156	171	181	190	217	267
※※ Case I (ρ= (ksf), B'(ft))	3.75,2.24	3.66,2.69	3.59,3.11	3.56,3.49	3.52,3.89	3.52,4.31	3.69,4.46	3.77,4.77	3.89,5.11	3.92,5.61	3.92,6.18	4.03,6.40	4.3,6.95	4.28,7.26	4.39,7.57	4.65,7.82	4.85,8.02
※※ Case II (ρ= (ksf), B'(ft))	1.16,5.58	1.33,6.13	1.51,6.55	1.69,6.86	1.88,7.16	2.08,7.38	2.29,7.60	2.50,7.80	2.17,8.14	2.97,8.47	3.19,8.93	3.41,9.05	3.70,9.43	4.02,9.58	4.26,9.80	8.57,10.09	4.52,10.3
※※ Case III (ρ= (ksf), B'(ft))	1.26,5.46	1.36,5.97	1.49,6.37	1.64,6.66	1.79,6.93	1.95,7.08	2.11,7.33	2.28,7.55	2.50,7.84	2.66,8.12	2.81,8.59	3.00,8.59	3.22,9.10	3.49,9.38	3.65,9.79	3.89,9.74	4.07,9.96

B (e=0) eccentricity, B is the effective footing width.
※ Quantities include 1'-0" extension above the design 'H' line.
※※ 50 psf pressure shown in the table is the equivalent uniform pressure per AASHTO (LRFD) 11.6.3.2

Return to Table of Contents

APPENDIX VI

WEST BASIN MUNICIPAL WATER DISTRICT STANDARD DRAWINGS

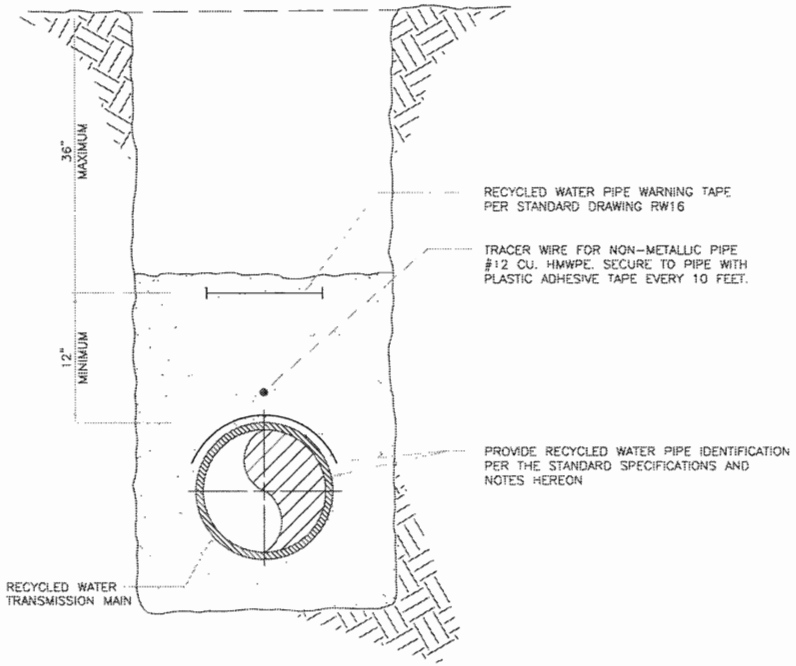

NOTES:

ALL RECYCLED WATER PIPELINES, INCLUDING SERVICE LINES AND ATTACHED APPURTENANCES SHALL BE PROVIDED WITH IDENTIFICATION PER ONE OF THE FOLLOWING ALTERNATIVES:

PVC PIPE ALTERNATIVE:

1 PIPE SHALL BE COLORED PURPLE AND INTEGRALLY STAMPED/MARKED WITH CONTINUOUS WORDING "CAUTION: RECYCLED WATER, DO NOT DRINK" PRINTED IN 5/8" BLACK LETTERING ON OPPOSITE SIDES OF THE PIPE.

2. AS AN OPTION TO PURPLE PIPE, PURPLE COLORED POLYETHYLENE IDENTIFICATION TAPE WITH CONTINUOUS WORDING "CAUTION: RECYCLED WATER, DO NOT DRINK" MAY BE ATTACHED TO THE TOP OF PIPE PER STANDARD DRAWING RW16.

3. AS AN OPTION TO EITHER OF THE ABOVE ALTERNATIVES, PURPLE COLORED POLYETHYLENE WRAP WITH CONTINUOUS WORDING "CAUTION: RECYCLED WATER, DO NOT DRINK" MAY BE USED TO ENCASE THE PIPE PER STANDARD DRAWING RW16.

DUCTILE IRON PIPE ALTERNATIVE:

1 PURPLE COLORED POLYETHYLENE IDENTIFICATION TAPE WITH CONTINUOUS WORDING "CAUTION: RECYCLED WATER, DO NOT DRINK" SHALL BE ATTACHED TO THE TOP OF PIPE PER STANDARD DRAWING RW16

2 AS AN OPTION TO THE ABOVE ALTERNATIVE, PURPLE COLORED POLYETHYLENE WRAP WITH CONTINUOUS WORDING "CAUTION: RECYCLED WATER, DO NOT DRINK" MAY BE USED TO ENCASE THE PIPE PER STANDARD DRAWING RW16. PURPLE POLYETHYLENE ENCASEMENT SHALL BE USED AS THE SECOND LAYER OF ENCASEMENT REQUIRED FOR DUCTILE IRON PIPE CONSTRUCTION PER THE STANDARD SPECIFICATIONS.

STEEL PIPE ALTERNATIVE:

1 PURPLE COLORED POLYETHYLENE IDENTIFICATION TAPE WITH CONTINUOUS WORDING "CAUTION: RECYCLED WATER, DO NOT DRINK" SHALL BE ATTACHED TO THE TOP OF PIPE PER STANDARD DRAWING RW16

REVISION	DRAWN	APP'D.	DATE
JUNE 2003			

APPROVED

DISTRICT ENGINEER RCE DATE

WEST BASIN MUNICIPAL WATER DISTRICT

RECYCLED WATER PIPE IDENTIFICATION

STANDARD DRAWING RW15

W:\ENGINEERING\WB STANDARD SPECS AND DRAWINGS\Standard Specs WB PDF 2009\AutoCAD Drawings\Standard Specs WB\RW-15.dwg 07/21/2010 14:50

REPLACE PAVED SURFACE AND BASE PER RW18 OR JURISDICTIONAL REQUIREMENTS AND PERMITS (WHICHEVER IS MORE STRINGENT).

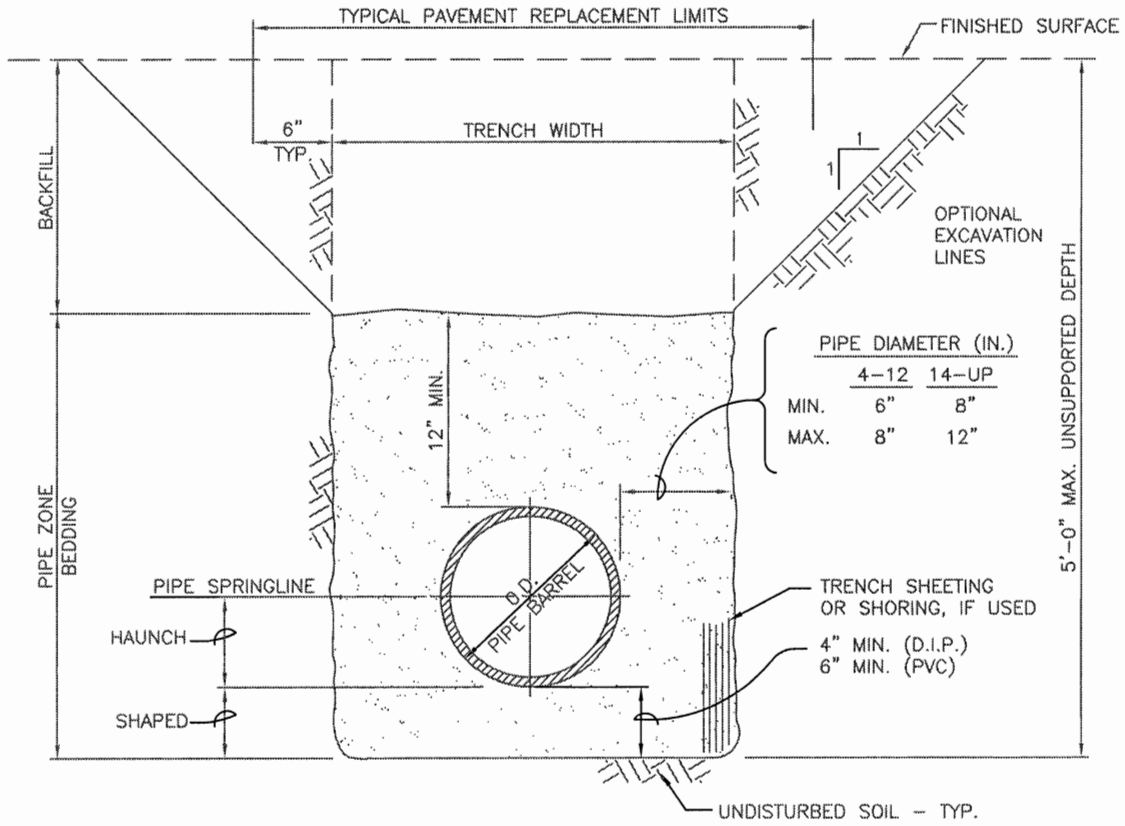

NOTE:

1. SHOULD LARGE GRAVEL OR COBBLES BE ENCOUNTERED AT THE TRENCH BOTTOM, THEY SHALL BE REMOVED AND REPLACED WITH GRANULAR MATERIAL WHICH SHALL BE COMPACTED TO PROVIDE UNIFORM SUPPORT AND A FIRM FOUNDATION.

2. IF EXCESSIVELY WET, SOFT, SPONGY, UNSTABLE, OR SIMILARILY UNSUITABLE MATERIAL IS ENCOUNTERED AT THE TRENCH BOTTOM, IT SHALL BE REMOVED AND REPLACED BY CRUSHED ROCK OR GRAVEL OF SUFFICIENT THICKNESS TO FORM A FIRM FOUNDATION.

3. WHERE WET, UNSTABLE OR RUNNING SOIL IS ENCOUNTERED, SOLID SHEETING IS REQUIRED FOR ALL VERTICAL TRENCH WALLS.

4. TRENCH SHEETING OR SHORING SHALL BE A MINIMUM OF 6 INCHES FROM THE PIPE BARREL AT SPRINGLINE.

5. VERTICAL TRENCH WALLS
   a) FOR DEPTHS UP TO 5'–0", NO TRENCH SUPPORT IS REQUIRED UNLESS UNSTABLE OR RUNNING SOIL IS ENCOUNTERED.
   b) FOR DEPTHS EXCEEDING 5'–0", SHEETING, SHORING OR OTHER EQUIVALENT BRACING SHALL BE PROVIDED IN ACCORDANCE WITH THE CALIFORNIA DEPARTMENT OF INDUSTRIAL RELATIONS (CAL/OSHA) CODE OF REGULATIONS TITLE 8, SUB CHAPTER 4 "CONSTRUCTION SAFETY ORDERS".

6. OPTIONAL COMBINATION OF VERTICAL AND SLOPING TRENCH WALLS
   a) TRENCH DEPTHS EXCEEDING 5'–0" SHALL HAVE VERTICAL WALLS IN PIPE ZONE UNLESS OTHERWISE APPROVED BY THE ENGINEER.
   b) FOR TRENCHES WITH COMBINED WALLS AND ANY DEPTH EXCEEDING 3'–6", THE CONTRACTOR SHALL PROTEDT IN ACCORDANCE WITH THE CALIFORNIA DEPARTMENT OF INDUSTRIAL RELATIONS (CAL/OSHA) CODE OF REGULATIONS TITLE 8, SUB CHAPTER 4 "CONSTRUCTION SAFETY ORDERS".

7. BEDDING SHALL BE PER STANDARD SPECIFICATIONS, EXCEPT THAT
   a) ALL PIPE SHALL HAVE A BEDDING WITH AN SE OF 30 MINIMUM.
   b) SE OF 30 AND HAUNCH BEDDING SHALL BE HAND TAMPED TO 90% RELATIVE COMPACTION MIN. FOR PVC AND ALL OTHER FLEXIBLE PIPE INSTALLATIONS, WHEREUPON BEDDING ABOVE SPRINGLINE SHALL BE COMPACTED CONCURRENTLY WITH THE BACKFILL.

REVISION	DRAWN	APP'D.	DATE
JUNE 2003			

APPROVED

DISTRICT ENGINEER RCE DATE

WEST BASIN MUNICIPAL WATER DISTRICT

PIPE TRENCHING AND BEDDING

STANDARD DRAWING
RW17

W:\ENGINEERING\WB STANDARD SPECS AND DRAWINGS\West Basin Standard Specs_2007\Standard Specs WB\RW-17-bw.dwg 02/22/2010 11:37

APPENDIX VII

COUNTY OF LOS ANGELES, PUBLIC HEALTH DEPARTMENT

ENTRADERO STORMWATER BASIN RECYCLED WATER

PROJECT APPROVAL CONDITIONS

COUNTY OF LOS ANGELES
Public Health

JONATHAN E. FIELDING, M.D., M.P.H.
Director and Health Officer

CYNTHIA A. HARDING, M.P.H.
Chief Deputy Director

ANGELO J. BELLOMO, REHS
Director of Environmental Health

TERRI S. WILLIAMS, REHS
Assistant Director of Environmental Health

JACQUELINE TAYLOR, MPA, REHS
Director of Environmental Protection Bureau

Cross Connection & Water Pollution Control Program
5050 Commerce Drive
Baldwin Park, California91706
TEL (626) 430-5290 • FAX (626) 813-3025

www.publichealth.lacounty.gov

BOARD OF SUPERVISORS

Gloria Molina
First District

Mark Ridley-Thomas
Second District

Zev Yaroslavsky
Third District

Don Knabe
Fourth District

Michael D. Antonovich
Fifth District

RECEIVED

DEC 17 2013

Public Works Department

December 9, 2013

City of Torrance, Public Works Department
20500 Madrona Ave.
Torrance, CA 905

Plan Check #: 2013087
Site ID #: 102215
Water Purveyor: California Water Service Company

Attention: John Dettle, Project Manager

Subject: Entradero Stormwater Basin Enhancement – Recycled Water for Irrigation. Halison Street, Torrance, CA. 90503

Drawings by: CWE – Sheets (19) - T-1, C-1,L-1,L-3,L-4,L-5,L-18 to L-24, RW-1 to RW-6. Plans reflect proposal for use of recycled water for irrigation in conjunction with non-potable water (from potable water source protected with approved backflow prevention device) irrigation system designated for specific areas. New potable water system proposed.

In response to your request for project review, this Department submits the following:
Plan and Project Approved with the following conditions:

1. All buried water lines must be identified with approved identification tape, in an approved manner, distinguishing between: "Recycled Water, Do Not Drink"– Purple manufactured pipe or approved sleeving; "Potable Water"– Blue or green tape; "Non-Potable Water, Do Not Drink" – Yellow tape. Identification tape shall be secured directly to the associated water conveyance pipe, every 5 feet with black adhesive tape, zip ties are not allowed. Submit samples or photographs of the identification tape or sleeves, recycled water purple pipe for approval.

2. Contact pipe identification suppliers immediately to check availability of the required various pipeline identification tape, sleeves, and tags so as to avoid unnecessary construction delays. Provide samples to this Program for approval.

3. Any irrigation system supplied from the domestic/potable water system shall be protected by an approved backflow prevention device and shall not be interconnected with the recycled water irrigation system. The two irrigation systems shall be separate, stand-alone systems.

4. **All Water lines** must be inspected by a representative from the Cross-Connection & Water Pollution Control Program of this Department for proper identification and separation requirements prior to back-filling or enclosing in walls to avoid re-excavation or re-exposure of those lines for inspection.

5. Ensure proposed quick coupler valves for recycled water system is of the acme thread type design, and the standard single lug is designated for the non-potable irrigation system.

6. Contact Joe Walters, West Basin MWD, regarding this proposal for any additional requirements regarding the use of recycled water for irrigation.

7. Contact Dave Delsigne, California Water Service Company, for requirements regarding domestic water meter service protection and approved backflow device protection.

8. Contact Jamie Murray, City of Torrance Department of Building & Safety, regarding requirements for the installation of approved backflow prevention devices at the water meter service(s) and inspection of the domestic water line installation.

9. Submit contact information of the current, "Recycled Water Use Site Supervisor", for the Parks Department in the City of Torrance, for this site.

10. Any unauthorized changes to the approved plans or during construction without written approval, from the Cross-Connection & Water Pollution Control Program of this Department, will deem this review and approval void with construction subject to suspension. Re-submission of plans with a completed application and associated fees will be required for review and approval prior to construction re-commencing.

If you have any questions or need additional information, please contact our representative, John Furuta, at (213) 305-1101 or at jfuruta@ph.lacounty.gov.

Sincerely,

DAM BACANI FOR CARLOS BORJA

Carlos Borja, MPH, REHS
Chief Environmental Health Specialist
Cross Connection & Water Pollution Control Program
Department of Public Health, Bureau of Environmental Protection
5050 Commerce Drive, Rm 116
Baldwin Park, Ca 91706
(626) 430-5295 office
(323) 842-9638 cell

cc: C. Diep, California State DPH Drinking Water
J. Furuta, LA County DPH
D. Bacani, LA County DPH
J. Walters, West Basin MWD
D. Delsigne, California Water Service Company/WBMWD
J. Murray, City of Torrance B&S
F. Molina, City of Torrance Water Division
E. Erickson,Regional Water Quality Control Board
File