# TORRANCE POLICE DEPARTMENT

## UPS REPLACEMENT PROJECT

## 3300 CIVIC CENTER DR, TORRANCE, CA 90505

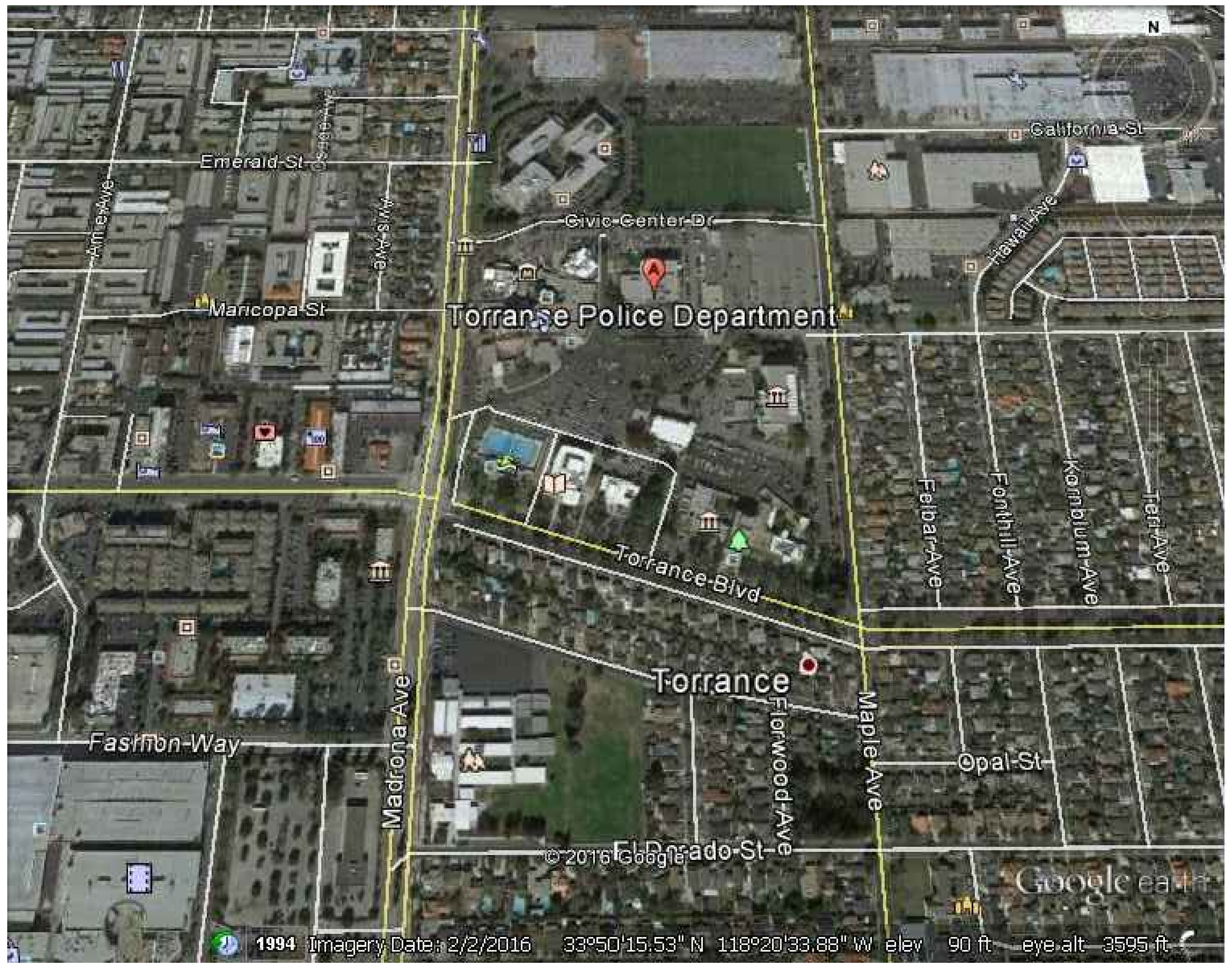


**CITY OF TORRANCE MAP** — SCALE: N.T.S. — 2

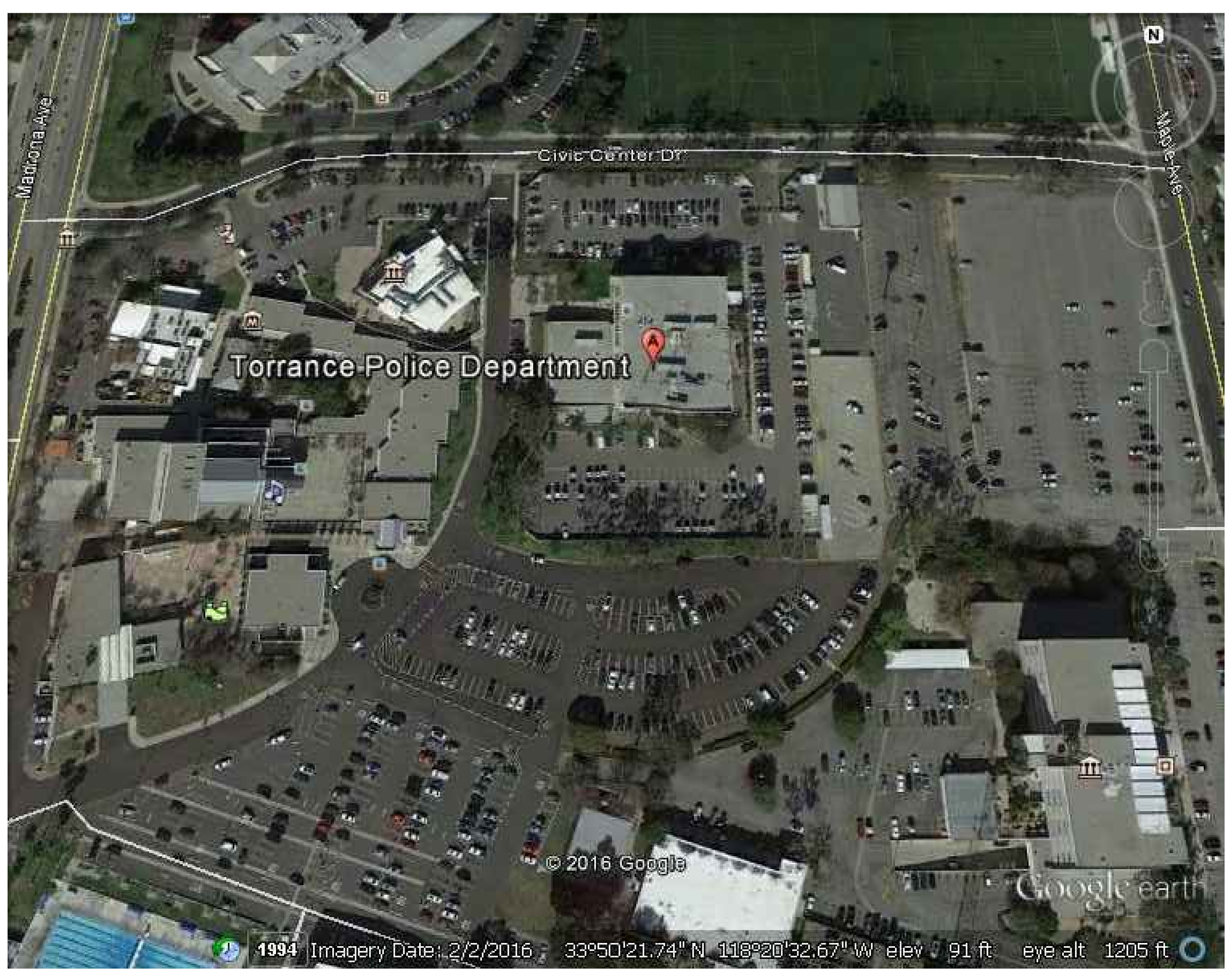


**VICINITY MAP** — SCALE: N.T.S. — 1

## GENERAL NOTES

1. THE DRAWINGS DESCRIBE THE SYSTEMS. FURNISH ALL MATERIAL AND DO ALL WORK REQUIRED AS INDICATED ON THE DRAWINGS AND SPECIFICATIONS UNLESS OTHERWISE NOTED. FURNISH AND INSTALL ALL NEW MATERIAL AND EQUIPMENT AS REQUIRED TO PRODUCE A COMPLETE OPERATING SYSTEM. ALL WORK SHALL COMPLY WITH 2013 EDITION OF THE CALIFORNIA ELECTRICAL CODE (BASED ON 2011 NEC) CODE.
2. CODES AND PERMITS: ALL ELECTRICAL EQUIPMENT, INSTALLATION, ETC., SHALL CONFORM TO ALL APPLICABLE CODES AND ORDINANCES, INCLUDING CALIFORNIA TITLE 24. CONSTRUCTION SHALL COMPLY WITH THE FOLLOWING PARTS OF TITLE 24, CALIFORNIA CODE OF REGULATIONS (CCR):
   TITLE 24, PART 2, CCR (2013 CALIFORNIA BUILDING CODE W/AMENDMENTS)
   TITLE 24, PART 3, CCR (2013 CALIFORNIA ELECTRICAL CODE W/AMENDMENTS)
   (2013 CALIFORNIA GREEN BUILDINGS STANDARDS CODES)
   CONTRACTOR SHALL OBTAIN AND PAY FOR ALL PERMITS & INSPECTIONS.
3. PROVIDE AND INSTALL ALL MATERIALS IN CONFORMANCE WITH APPLICABLE CODES, LOCAL CITY AMENDMENTS, ORDINANCES AND LOCAL AUTHORITIES HAVING JURISDICTION. INSTALL ALL EQUIPMENT IN ACCORDANCE WITH THE REQUIREMENTS OF THE INSPECTING AUTHORITY AND THE MANUFACTURER'S RECOMMENDATIONS.
4. FOR PURPOSES OF CLEARNESS AND LEGIBILITY, THE ELECTRICAL DRAWINGS ARE ESSENTIALLY DIAGRAMMATIC. THE SIZE AND LOCATION OF EQUIPMENT IS SHOWN TO SCALE WHEREVER POSSIBLE. THE CONTRACTOR SHALL VERIFY ALL CONDITIONS IN THE FIELD PRIOR TO COMMENCING WORK.
5. THE SYMBOLS DESIGNATING CONDUIT SIZES AND QUANTITIES OF BRANCH CIRCUIT WIRING DO NOT INCLUDE THE EQUIPMENT GROUNDING CONDUCTOR REQUIRED. INSTALL REQUIRED EQUIPMENT GROUNDING CONDUCTOR IN ALL CONDUITS, SIZE PER CEC 250-122, EQUIPMENT GROUNDING CONDUCTOR SHALL BE GREEN.
6. BEFORE SUBMITTING BID, BECOME THOROUGHLY FAMILIAR WITH ACTUAL EXISTING CONDITIONS AT THE BUILDING. THE INTENT OF THE WORK IS SHOWN ON THE DRAWINGS AND DESCRIBED HEREINAFTER. BY THE ACT OF SUBMITTING A BID PROPOSAL FOR WORK, THE CONTRACTOR SHALL BE DEEMED TO HAVE MADE SUCH A STUDY AND EXAMINATION AND TO ACCEPT ALL CONDITIONS PRESENT AT THE SITE. NO REQUEST FOR ADDITIONAL PAYMENT SHALL BE CONSIDERED AS VALID, DUE TO FAILURE TO ALLOW FOR CONDITIONS WHICH MAY EXIST.
7. REFER TO ALL DRAWINGS FOR ADDITIONAL INFORMATION, EXACT EQUIPMENT LOCATION, MOUNTING HEIGHTS, MOUNTING REQUIREMENTS AND MAKE ALL FINAL ELECTRICAL CONNECTIONS TO ALL ELECTRICAL EQUIPMENT AS REQUIRED FOR A COMPLETE AND OPERABLE SYSTEM.
8. CONTRACTOR TO COORDINATE WITH OTHER TRADES AND/OR MANUFACTURER CUT SHEETS FOR ADDITIONAL INFORMATION, EQUIPMENT INSTALLATION, MOUNTING REQUIREMENTS AND TO MAKE FINAL CONNECTIONS OF ALL ELECTRICAL EQUIPMENT.
9. CONTRACTOR'S BID SHALL BE BASED ON ALL WORK SHOWN ON THE PLANS AND SPECIFICATIONS. ALL PREMIUM TIME COSTS REQUIRED SHALL BE INCLUDED IN THE BID. IF CONTRACTOR PROPOSES TO SUBSTITUTE FOR EQUIPMENT SPECIFIED, HE SHALL SUBMIT HIS REQUEST FOR CONSIDERATION TO THE OWNER AND ENGINEER PRIOR TO THE BID, IN WRITING. ALL SUBSTITUTIONS MUST BE REVIEWED BY THE ENGINEER. SUCH REVIEW SHALL NOT RELIEVE THE CONTRACTOR FROM COMPLYING WITH THE REQUIREMENTS OF THE DRAWINGS AND SPECIFICATIONS. THE CONTRACTOR SHALL BE RESPONSIBLE AT HIS OWN EXPENSE FOR ANY CHANGES RESULTING FROM HIS PROPOSED SUBSTITUTIONS WHICH MAY AFFECT OTHER PARTS OF HIS OWN WORK OR THE WORK OF OTHER CONTRACTORS.
10. ALL MATERIALS AND EQUIPMENT SHALL BE NEW AND SHALL BEAR THE UNDERWRITERS LABEL (UL) AND BE INSTALLED IN THE MANNER FOR WHICH THEY ARE DESIGNED AND APPROVED.
11. ANY SUBSTITUTIONS OF SPECIFIED MATERIALS REQUIRE WRITTEN NOTIFICATION BY THE CONTRACTOR AND FORMAL APPROVAL BY OWNER REPRESENTATIVE AND/OR THE ENGINEER.
12. WHENEVER CONDUITS PENETRATE A RATED WALL, IT IS TO BE SEALED IN AN APPROVED MANNER.
13. ISOLATED EQUIPMENT GROUNDING CONDUCTOR INSULATION SHALL BE GREEN WITH A YELLOW STRIPE. EQUIPMENT GROUNDING CONDUCTOR SHALL BE GREEN.
14. ALL DEVICES INSTALLED OUTSIDE OR SUBJECT TO WATER SPRAY SHALL BE APPROVED FOR WET LOCATION. ALL DEVICES SUBJECT TO VAPORS, STEAM AND MOISTURE SHALL BE APPROVED FOR DAMP LOCATION.
15. PROVIDE NAMEPLATES FOR ALL NEW AND EXISTING PANELBOARDS, DISTRIBUTION BOARDS "CIRCUIT BREAKERS", DISCONNECTS, PULL BOXES, CABINETS AND ALL ELECTRICAL EQUIPMENT IDENTIFIED BY NAME ON DRAWINGS THAT ARE AFFECTED BY THIS WORK.
16. IN ADDITION TO JUNCTION BOXES INDICATED ON DRAWINGS, INSTALL JUNCTION BOXES AND PULL BOXES FOR CABLE SPLICES, CABLE PULLING AND CONNECTIONS NECESSARY FOR THE INSTALLATION OF A COMPLETE OPERATING SYSTEM. JUNCTION BOXES AND PULL BOXES SHALL BE ACCESSIBLE. LABEL JUNCTION BOXES AND PULL BOXES WITH APPROPRIATE DESIGNATION, MAXIMUM (3) 90° BENDS.
17. MAIN ELECTRICAL FEEDER CONDUITS SHALL BE RIGID METAL CONDUITS UNLESS OTHERWISE NOTED OR AS ALLOW BY APPLICABLE CODES. STEEL FLEXIBLE CONDUITS FOR SHORT EQUIPMENT CONNECTIONS, EQUIPMENT CONNECTIONS SUBJECT TO VIBRATIONS AND EQUIPMENT LOCATED OUTSIDE OR SUBJECT TO WATER SPRAY MAKE CONNECTIONS WITH LIQUID-TIGHT CONDUIT AND WEATHERPROOF COMPONENTS, LENGTH IS LIMITED TO SIX FEET, PROVIDE EQUIPMENT GROUNDING CONDUCTOR SIZE PER 2010 CEC TABLE 250-122.
18. PAINT ALL NEW EXPOSED ELECTRICAL RACEWAYS, CABINETS, ENCLOSURES AND FITTINGS TO MATCH ADJACENT FINISHES. EXPOSED CONDUIT RUNS SHALL BE INSTALLED AS CLOSED AS POSSIBLE TO THE CEILING.
19. PROVIDE PULL STRING IN EMPTY CONDUITS INSTALLED AS PART OF THIS PROJECT.
20. UNLESS OTHERWISE NOTED PROVIDE STRANDED COPPER CONDUCTORS THROUGHOUT, MINIMUM SIZE #12 AWG. USE CONDUCTORS WITH THHN/THWN 600 VOLTS INSULATION FOR SIZES #6 AWG AND SMALLER, UNLESS OTHERWISE NOTED. CONDUCTORS #4 AWG AND LARGER SHALL BE THHN INSULATION, UNLESS OTHERWISE NOTED.
21. DELIVER ALL CONDUCTORS TO THE JOB SITE IN ORIGINAL UNBROKEN CARTON OR REEL, PROPERLY TAGGED WITH U.L. LABEL, SIZE, MANUFACTURER'S TRADE NAME AND THE DATE MANUFACTURED.
22. IT IS THE RESPONSIBILITY OF THE CONTRACTOR TO MAINTAIN WORK AREA CLEAR OF DEBRIS ON DAILY BASIS DURING CONSTRUCTION.
23. NO PIPING, DUCTS OR EQUIPMENT FOREIGN TO ELECTRICAL EQUIPMENT SHALL BE PERMITTED TO BE LOCATED WITHIN DEDICATED WORKING SPACE OF EQUIPMENT, INCLUDING THE DEDICATED SPACE BETWEEN THE TOP OF EQUIPMENT TO THE STRUCTURAL CEILING ABOVE. ALL FOREIGN INSTALLATION WITHIN THE SPACE (I.E. FIRE SPRINKLER, ETC) SHALL BE INSTALLED IN ACCORDANCE WITH NEC 11026(F)(1)(c).
24. USE PLASTIC COATED SELF-STICKING MARKERS SUCH AS THOMAS & BETTS E-Z CODE FOR IDENTIFICATION OF CONDUCTORS AND METAL EDGE BANDED PAPER TAGS ON PULL ROPES.

## SCOPE OF WORK

THE SCOPE OF WORK FOR THIS PROJECT IS LIMITED TO THE REMOVAL OF THE EXISTING 46KVA UPS EQUIPMENT AND PROVISION OF A NEW 100KVA UNIT. WITHIN THE SECOND FLOOR COMPUTER ROOM OF THE TORRANCE POLICE DEPARTMENT BUILDING.

THE WORK INCLUDES PROVISION OF A NEW AUTOMATIC TRANSFER SWITCH (ATS) AND CONNECTIONS TO EXISTING MAIN SWITCHGEAR LOCATED WITHIN THE BASEMENT LEVEL MAIN ELECTRICAL EQUIPMENT ROOM.

THE CONTRACTOR SHALL INCLUDE THE PROVISION AND CONNECTION OF A TEMPORARY UPS AND BATTERY SYSTEM TO FEED THE CRITICAL LOAD WHILE THE DEMO AND PREPARATION WORK IS BEING UNDERTAKEN.

## TERMS AND ABBREVIATIONS

| ABBREVIATION | DESCRIPTION |
|---|---|
| @ | AT |
| A | AMPERES |
| APPARATUS | INDICATES SWITCHGEARS, DISTRIBUTION BOARDS, TRANSFORMERS, ETC. |
| AS | AMP SWITCH |
| BKBD | BACKBOARD |
| C.O. | CONDUIT ONLY |
| CWL | COLD WATER LINE |
| ø | PHASE OR DIAMETER |
| DN | DOWN |
| EC | ELECTRICAL CONTRACTOR |
| ELEC | ELECTRIC OR ELECTRICAL |
| EM. | EMERGENCY |
| EQUIP. | EQUIPMENT |
| EXIST. | EXISTING |
| FDR. | FEEDER, INDICATES CONDUIT AND CONDUCTORS |
| FLA | FULL LOAD AMPERES |
| GC | GENERAL CONTRACTOR |
| GND | GROUND |
| HP | HORSEPOWER |
| IND. | INDICATED |
| JB | JUNCTION BOX |
| KVA | KILOVOLT AMPERES |
| KW | KILOWATT |
| KWH | KILOWATT HOUR |
| LCL | LONG CONTINUOUS LOAD |
| MFR. | MANUFACTURER |
| MH | MOUNTING HEIGHT |
| N.T.S. | NOT TO SCALE |
| PB | PULLBOX |
| PNL | PANEL |
| PROVIDE | INDICATED ELECTRICAL CONTRACTOR TO FURNISH AND INSTALL |
| SWBD | SWITCHBOARD |
| TRANSF. | TRANSFORMER |
| TYP. | TYPICAL |
| U.G. | UNDERGROUND |
| U.O.N. | UNLESS OTHERWISE NOTED |
| V | VOLT |
| VA | VOLT AMPERES |
| VD | VOLTAGE DROP |
| W | WATTS |
| WP | WEATHERPROOF |

## POWER-OFF NOTICE

CONTRACTOR SHALL PROVIDE CITY OF TORRANCE POLICE DEPT. WRITTEN NOTICE 1 WEEK (7 DAYS) IN ADVANCE OF ANY REQUIRED ELECTRICAL SHUT DOWN OR POWER DISCONNECT REQUIRED AS PART OF THIS WORK. THE NOTICE SHALL INCLUDE THE TIME AND DATE OF THE SHUT DOWN AND THE DURATION OF THE ACTIVITY. THE CITY MAY REQUEST THE CONTRACTOR TO ADJUST THE TIME AND DURATION OF ANY SHUT DOWN AT ANY TIME.

## ELECTRICAL SYMBOLS LEGEND

| SYMBOL | DESCRIPTION |
|---|---|
| | GROUNDED TYPE DUPLEX RECEPTACLE, WALL MOUNTED |
| | FLEXIBLE CONNECTION TO EQUIPMENT |
| | SURFACE MOUNTED CABINET OR EQUIPMENT AS NOTED. +6' -0" TO TOP |
| | FLUSH MOUNTED CABINET OR EQUIPMENT AS NOTED +6' -0" TO TOP |
| | SURFACE MOUNTED BRANCH CIRCUIT PANELBOARD |
| | FLUSH MOUNTED BRANCH CIRCUIT PANELBOARD |
| | SWITCHBOARD, DISTRIBUTION BOARD |
| | TELEPHONE PLYWOOD BACKBOARD SIZE AS INDICATED ON PLANS |
| "T1B" | "DRY TYPE" TRANSFORMER DESIGNATION |
| | CONDUIT RUN IN OR BELOW FLOOR SLAB OR UNDERGROUND - 3/4" C. MINIMUM |
| | CONDUIT RUN CONCEALED IN WALL OR ABOVE FINISHED CEILING - 1/2" C. |
| | CONDUIT RUN EXPOSED<br>2#12, ½"C. 4#12, ½"C. 6#12, ¾"C.<br>3#12, ½"C. 5#12, ¾"C. 7#12, ¾"C.<br>2#10, ½"C. 4#10, ½"C. 6#10, ¾"C.<br>3#10, ½"C. 5#10, ¾"C. 7#10, 1"C.<br>2#8, ¾"C. 3#8, ¾"C. 4#8, 1"C.<br>WIRE SIZE OTHER THAN #12, #10 OR #8 IS NOTED ON EACH CONDUIT RUN WITH SIZE OF CONDUIT (I.E. 3#6 - 1"C.) |
| —E— | EXISTING CONDUIT RUN |
| #10 | HASH MARKS INDICATES THE QUANTITY OF CONDUCTORS REQUIRED. NO HASH MARKS INDICATES 2 #12 AWG. CONDUCTORS LARGER THAN SIZE #12 AWG ARE INDICATED NEXT TO HASH MARKS |
| HA-1,2,5 | INDICATE HOMERUN TO DESIGNATED PANEL BOARD, SWITCH GEAR, OR SIGNAL CABINET<br>WHEN SHOWN INDICATE THE FOLLOWING:<br>BRANCH CIRCUIT NUMBERS<br>HOUSE PANEL OR DISTRIBUTION PANEL |
| T | LOW VOLTAGE 115/24 VAC TRANSFORMER MOUNTED ABOVE CEILING BY EDWARD OR EQUAL |
| | PUSH BUTTON OUTLET AT +4' -0" A.F.F. FOR DOOR BELL SYSTEM |
| B | DOOR BELL WITH LOW VOLTAGE 115/24 VAC TRANSFORMER WALL MOUNTED 6'-6" A.F.F. BY NUTONE OR EQUAL. |
| P1A | INDICATES REFERENCE TO PANELBOARD "P1A" |
| 2A | ELECTRICAL FEEDER DESIGNATION |
| 1 | REFERENCE NOTE DESIGNATION |
| M | METERING AND TEST BLOCKS AS REQUIRED BY THE UTILITY SERVING AGENCY |
| | CIRCUIT BREAKER |
| | GROUND |
| 3 | MOTOR (NUMBER INSIDE SYMBOL DESIGNATES HP OF MOTOR) |

NOTE: FOR ADDITIONAL SYSTEM SYMBOLS AND WIRING LEGEND REFER TO SITE PLANS AND RISER DIAGRAMS

## ELECTRICAL SHEET INDEX

| SHEET NO. | SHEET TITLE | CURRENT ISSUE |
|---|---|---|
| E-0.1 | ELECTRICAL GENERAL NOTES, SYMBOLS LEGEND & SHEET INDEX | PLANCHECK |
| E-0.2 | ELECTRICAL UPS CUT SHEET | PLANCHECK |
| S-1 | STRUCTURAL EXISTING PARTIAL SECOND FLOOR PLAN | PLANCHECK |
| E-2.0 | ELECTRICAL BASEMENT FLOOR PLAN | PLANCHECK |
| E-2.1 | ELECTRICAL GROUND PARTIAL FLOOR PLAN | PLANCHECK |
| E-2.2 | ELECTRICAL SECOND FLOOR PLAN | PLANCHECK |
| E-4.1 | ELECTRICAL EXISTING SINGLE LINE DIAGRAM | PLANCHECK |
| E-4.2 | ELECTRICAL EXISTING SINGLE LINE DIAGRAM - UPS ARRANGEMENT | PLANCHECK |
| E-4.3 | ELECTRICAL NEW SINGLE LINE DIAGRAM | PLANCHECK |
| E-4.4 | ELECTRICAL NEW SINGLE LINE DIAGRAM - UPS ARRANGEMENT | PLANCHECK |
| E-4.5 | ELECTRICAL SEQUENCE OF CONNECTION | PLANCHECK |
| E-4.6 | ELECTRICAL PANEL SCHEDULES | PLANCHECK |

| REV. | DESCRIPTION | DATE | BY |
|---|---|---|---|
| REV. | PLAN CHECK | 06/15/16 | |
| REV. | PROGRESS ISSUE | 06/1/16 | |

REGISTERED PROFESSIONAL ENGINEER — DESMOND MAHONY — No. E020642 — Exp. 03-31-18 — ELECTRICAL — STATE OF CALIFORNIA


1983 WEST 190TH STREET, SUITE 200
TORRANCE, CA 90504
TEL: (310) 464-8404
FAX: (310) 464-8408
WWW.BREENENG.COM
BREEN Engineering Inc


**ELECTRICAL GENERAL NOTES, SYMBOLS LEGEND & SHEET INDEX**

**TORRANCE POLICE DEPARTMENT UPS REPLACEMENT PROJECT**
3300 CIVIC CENTER DR., TORRANCE, CA 90505

| | |
|---|---|
| DATE: | MAY 2016 |
| SCALE: | AS NOTED |
| PROJECT NUMBER: | 307-16-001 |
| DRAWN BY: | SG,KD |
| CHECKED BY: | DM |
| DRAWING NUMBER | E-0.1 |



DWF/PDF Created On: May 31, 2016 - 2:12pm Plotted By: ccalbo_beiser Filename: H:\Projects\307 City of Torrance\16-001 - TORRANCE POLICE DEPARTMENT – REPLACEMENT\01 - CAD\Electrical\E-0.2 ELECTRICAL SCHEDULES.dwg
PLOTTED PAPER SIZE (DRAWING HAS BEEN SCALED IF DIFFERENT): ARCH FULL BLEED E1 (30.00 X 42.00 INCHES) PLOT SCALE: 1:1 PLOT STYLE: PDF & DWF.STB
COPYRIGHT ©2016 BREEN ENGINEERING, INC.

ALL TECHNICAL INFORMATION CONTAINED IN THIS DOCUMENT IS THE EXCLUSIVE PROPERTY OF SCHNEIDER ELECTRIC INDUSTRIES SAS AND MAY NOTHER BE USED NOR DISCLOSED WITHOUT ITS PRIOR WRITTEN CONSENT.

DWG NO. 90-174770-00 | SH 1 | REV. X0

| REVISIONS | | | |
|---|---|---|---|
| REV | DESCRIPTION | DATE | APPROVED |
| X0 | NEW RELEASE | 8/27/08 | I.K. |

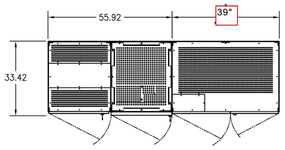


TOP VIEW

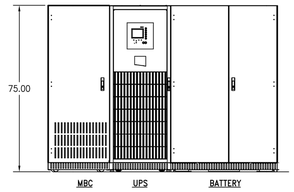


FRONT VIEW

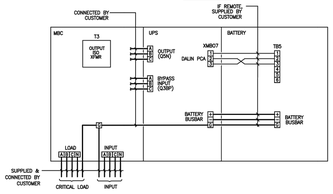


NOTES: UNLESS OTHERWISE SPECIFIED

1.1 DIMENSION FORMAT IS INCHES.

1.2 ALL DIMENSIONS ARE TO THE OUTSIDE EDGE OF CABINET, EXCLUDING DOOR LOCKS AND ALL HARDWARE.

1.3 REFER TO EACH INDIVIDUAL CABINET INSTALLATION DRAWING INDICATED BELOW:
A. 90-174700-00 UPS.
B. 90-174704-00 MBC WITH TRANSFORMER.

1.4 OPTIONAL, UP TO FOUR (4) BATTERY CABINETS. CABINETS LOCATED ADJACENT OR REMOTELY. EACH ADJACENT CABINET IS 26.24"W, 32.24"W OR 48.24"W WITH ONE OUTSIDE SIDE PANEL. SHOWN WITH 48"W CABINET. EACH REMOTE CABINET IS 26.48"W, 32.48"W OR 48.48"W. REFER TO EACH INDIVIDUAL CABINET INSTALLATION DRAWING INDICATED BELOW:
A. 90-174701-00 BATTERY (26 in & 32 in).
B. 90-174701-01 BATTERY (48 in).

1.5 CABINETS ARE ATTACHED TOGETHER USING BRACKETS.

1.6 PROVIDE TWO FEET REAR/SIDE CLEARANCE WITH SEISMIC BRACKETS. REFER TO DRAWING 90-174709-00.

1.7 FOR TOP FAN EXHAUST, ALLOW MINIMUM TWO FEET CLEARANCE.

| CONTRACT NO. | |
|---|---|
| APPROVALS | DATE |
| DRAWN B.KHOLOUSI | 8/27/08 |
| CHECKED M.M. | 8/27/08 |
| ISSUED I.K. | 8/27/08 |
| DO NOT SCALE DRAWING | |

SCHNEIDER ELECTRIC
Critical Power & Cooling Service Division
1650 Sidewinder Drive
Costa Mesa, CA 92626 U.S.A.

SYSTEM INSTALLATION
UPS SINGLE INP, BATT, MBC LOAD XFMR
GALAXY 5000

| SIZE | CAGE CODE | DWG NO. | REV. |
|---|---|---|---|
| B | 9L985 | 90-174770-00 | X0 |

SCALE NONE | CAD 90-174770-00_1 | SHEET 1 OF 4

DWG NO. 90-174770-00 | SH 2 | REV. X0

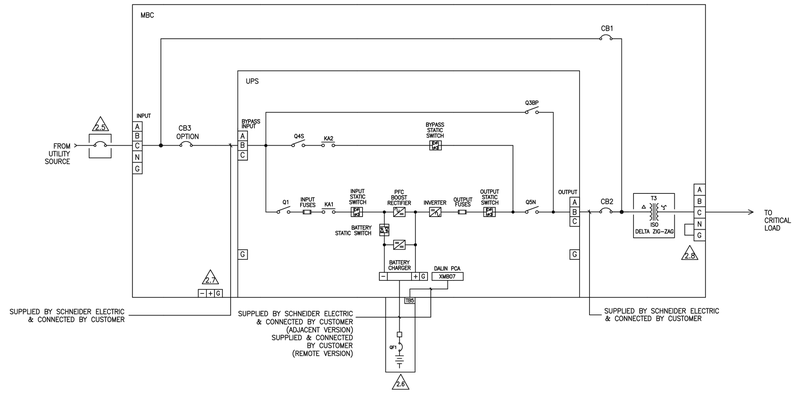


NOTES: UNLESS OTHERWISE SPECIFIED

2.1 FOLLOW ALL APPLICABLE NEC & LOCAL ELECTRICAL CODES.

2.2 ALL EXTERNAL WIRING BY CUSTOMER.

2.3 POWER & CONTROL CABLES SHALL BE IN SEPARATE CONDUITS.

2.4 CUSTOMER IS RESPONSIBLE FOR CONNECTING ALL SCHNEIDER ELECTRIC SUPPLIED CABLES.

2.5 UPSTREAM PROTECTIVE DEVICE REQUIRED. PROVIDED BY CUSTOMER.

2.6 ONE CABINET SHOWN. FOR UP TO FOUR (4) BATTERY CABINET CONNECTIONS, REFER TO DRAWINGS 90-174701-00 OR 90-174701-01.

2.7 FOR STAND ALONE BATTERY CABINETS WITH TOP ENTRY SYSTEM CONFIGURATION, DC CONNECTION IS FED THROUGH THE ADJACENT MBC.

2.8 THE OUTPUT NEUTRAL IS BONDED TO GROUND.

| SIZE | CAGE CODE | DWG NO. | REV. |
|---|---|---|---|
| B | 9L985 | 90-174770-00 | X0 |

SCALE NONE | CAD 90-174770-00_2 | SHEET 2 OF 4

DWG NO. 90-174770-00 | SH 3 | REV. X0

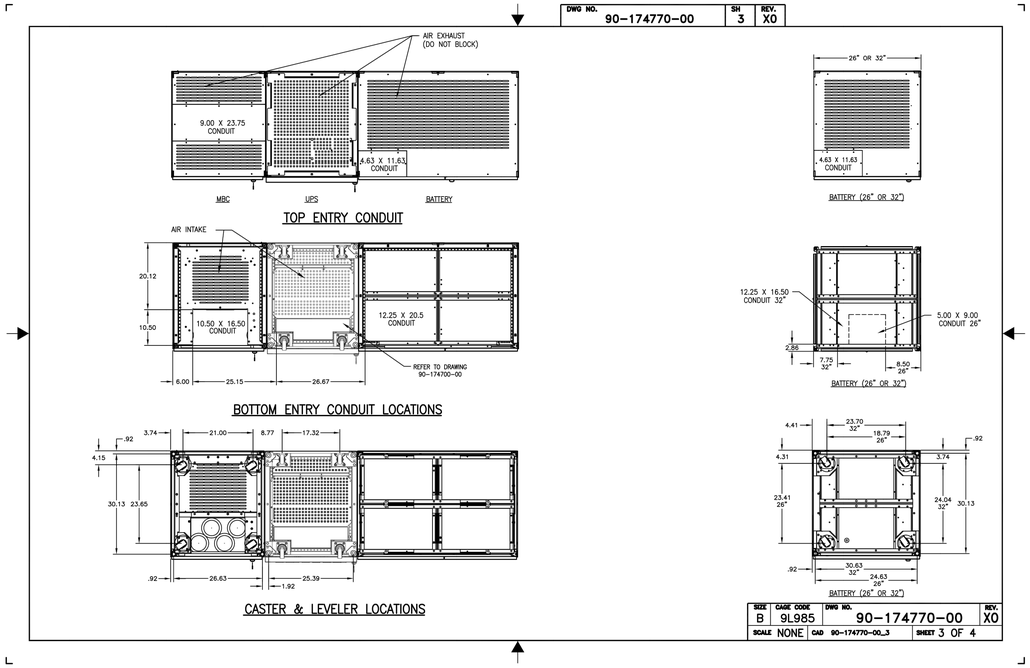


| SIZE | CAGE CODE | DWG NO. | REV. |
|---|---|---|---|
| B | 9L985 | 90-174770-00 | X0 |

SCALE NONE | CAD 90-174770-00_3 | SHEET 3 OF 4

DWG NO. 90-174770-00 | SH 4 | REV. X0

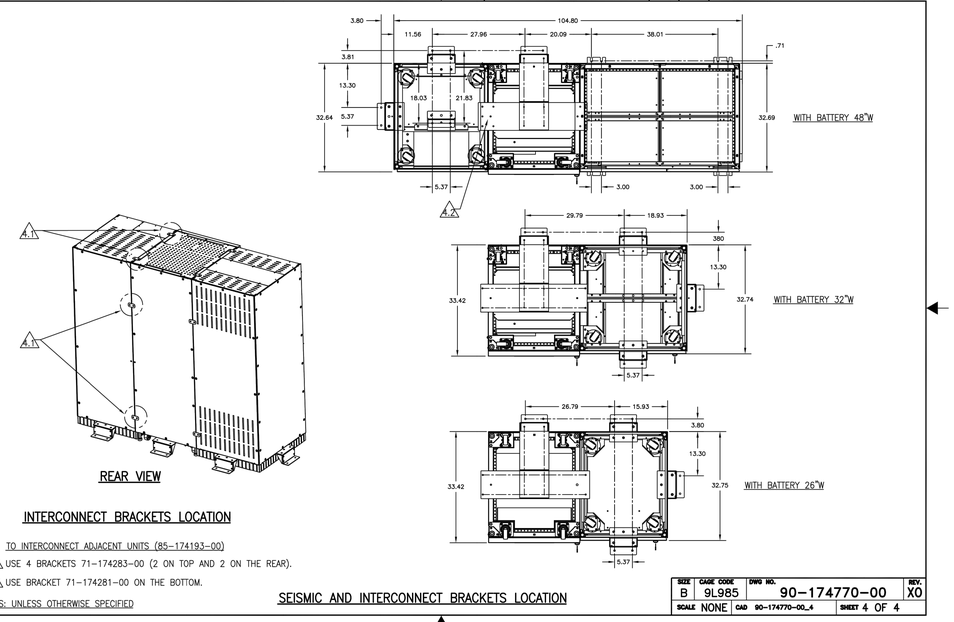


TO INTERCONNECT ADJACENT UNITS (85-174193-00)

4.1 USE 4 BRACKETS 71-174283-00 (2 ON TOP AND 2 ON THE REAR).

4.2 USE BRACKET 71-174281-00 ON THE BOTTOM.

NOTES: UNLESS OTHERWISE SPECIFIED

SEISMIC AND INTERCONNECT BRACKETS LOCATION

| SIZE | CAGE CODE | DWG NO. | REV. |
|---|---|---|---|
| B | 9L985 | 90-174770-00 | X0 |

SCALE NONE | CAD 90-174770-00_4 | SHEET 4 OF 4

## GALAXY 5000 UPS 40-130KVA (480V-208V) SCHEDULE SHEET

| UPS RATING | | UPS AC INPUT | | | | | BATTERY SYSTEM | | | | AC OUTPUT | | MECHANICAL DATA | | | |
|---|---|---|---|---|---|---|---|---|---|---|---|---|---|---|---|---|
| | | VOLTAGE | | CURRENT | | RECOMMENDED INPUT AWG | REC. OCPD | NOMINAL VDC | BATTERY KW | CURRENT @ NOM. V | CURRENT @ FULL LOAD | | TYPICAL DIMENSIONS WxHxD | AVERAGE WEIGHT LBS | FLOOR LOADING LBS/FT$^2$ | HEAT REJECTION BTU/HR |
| KVA | KW | INPUT | OUTPUT | FULL LOAD | MAX. | | | | | | MAX. | OCPD | | | | |
| 100 | 90 | 480 V | 208 V | 117 A | 148 A | 3/0 AWG | 200 A | 432 V | 97 KW | 225 V | 277 A | 350 A | 95"x75"x34" | 2565 | 180 | 29.11 |

| REV. | DESCRIPTION | DATE | BY |
|---|---|---|---|
| REV. | PLAN CHECK | 06/15/16 | |
| REV. | PROGRESS ISSUE | 06/1/16 | |

REGISTERED PROFESSIONAL ENGINEER
TESSWORD MARTIN
No. E020642
Exp. 03-31-18
ELECTRICAL
STATE OF CALIFORNIA

1983 WEST 190TH STREET, SUITE 200
TORRANCE, CA 90504
TEL: (310) 464-8404
FAX: (310) 464-8408
WWW.BREENENG.COM
BREEN Engineering Inc

ELECTRICAL UPS CUT SHEET

# TORRANCE POLICE DEPARTMENT UPS REPLACEMENT PROJECT

3300 CIVIC CENTER DR., TORRANCE, CA 90505

| | |
|---|---|
| DATE: | MAY 2016 |
| SCALE: | NONE |
| PROJECT NUMBER: | 307-16-001 |
| DRAWN BY: | SG,KD |
| CHECKED BY: | DM |
| DRAWING NUMBER | |

E-0.2



DWF/PDF Created On: Jun 29, 2016 - 8:31am Plotted By: sgulle_breene Filename: H:\Projects\307 City of Torrance\16-001 - TORRANCE POLICE DEPARTMENT - REPLACEMENT\01 - CAD\Electrical\E-0.2 ELECTRICAL SCHEDULES.dwg
PLOTTED PAPER SIZE (DRAWING HAS BEEN SCALED IF DIFFERENT): ARCH FULL BLEED E1 (30.00 X 42.00 INCHES) PLOT SCALE: 1:1 PLOT STYLE: PDF & DWF.STB

COPYRIGHT ©2016 BREEN ENGINEERING, INC.

## SPECIAL INSPECTIONS

1. SPECIAL INSPECTIONS SHALL CONFORM TO CBC, AND SHALL BE PROVIDED BY A SPECIAL INSPECTOR DURING CONSTRUCTION, ON THE FOLLOWING TYPES OF WORK:
   a.) EPOXY GROUTING
   b.) STRUCTURAL CONCRETE
   c.) FIELD WELDING
2. THE SPECIAL INSPECTOR SHALL BE A REGISTERED DEPUTY BUILDING INSPECTOR, APPROVED BY THE ENFORCEMENT AGENCY. THE DUTIES AND RESPONSIBILITIES OF THE SPECIAL INSPECTOR SHALL CONFORM TO CBC.

## STRUCTURAL STEEL AND MISCELLANEOUS METAL

1. ALL PHASES OF WORK PERTAINING TO STRUCTURAL STEEL CONSTRUCTION SHALL CONFORM TO CBC STANDARDS (SPECIFICATION FOR STRUCTURAL STEEL BUILDINGS - BY THE AMERICAN INSTITUTE OF STEEL CONSTRUCTION, FOURTEENTH EDITION).
2. ALL STRUCTURAL STEEL SHALL CONFORM TO ASTM A-992, GRADE 50, MISCELLANEOUS PLATES AND SHAPES MAY BE A-36 STEEL.
3. STEEL PIPE SHALL CONFORM TO ASTM A-53, TYPE E OR S, GRADE B. STEEL TUBES SHALL CONFORM TO ASTM A-500, GRADE B.
4. ALL BOLTS SHALL CONFORM TO THE FOLLOWING, UNLESS NOTED OTHERWISE:

   ANCHOR BOLTS-ASTM A-307
   TYPICAL STEEL CONNECTIONS-ASTM A-325N (BEARING)
   MOMENT AND DRAG CONNECTIONS-ASTM A-325SC (SLIP CRITICAL)
   MISCELLANEOUS CONNECTIONS NOT NOTED OTHERWISE-ASTM A-325N.
5. THE STRUCTURAL STEEL FABRICATOR SHALL SUBMIT SHOP DRAWINGS TO THE ARCHITECT FOR REVIEW PRIOR TO FABRICATION. SUBMIT (1) SEPIA AND (2) BLUELINE SETS.
6. ALL WELDING SHALL CONFORM TO CBC STANDARDS (STRUCTURAL WELDING CODE - STEEL, AWS D1.1), BY THE AMERICAN WELDING SOCIETY.). MINIMUM TENSILE STRENGTH OF WELD METAL SHALL BE 70 KSI. ALL WELDING SHALL BE PERFORMED BY CERTIFIED WELDERS.
7. ALL WELDS NOT SPECIFIED SHALL BE CONTINUOUS FILLET WELDS. SIZE OF WELDS SHALL BE BASED ON CBC STANDARDS FOR THICKER PART JOINED.
8. BOLT HOLES SHALL BE 1/16" LARGER IN DIAMETER THAN NOMINAL SIZE OF BOLT USED, UNLESS NOTED OTHERWISE.
9. ALL STRUCTURAL STEEL SURFACES THAT ARE TO RECEIVE SPRAY-APPLIED FIREPROOFING OR TO BE ENCASED IN CONCRETE OR MASONRY SHALL BE LEFT UNPAINTED.
10. ALL METAL ITEMS, INCLUDING CONNECTORS, EXPOSED TO THE WEATHER SHALL BE HOT-DIPPED GALVANIZED, AFTER FABRICATION.
11. STRUCTURAL STEEL SHALL BE DELIVERED TO THE JOB SITE FREE OF EXCESSIVE RUST, MILL SCALE, GREASE, ETC.
12. OPENINGS SHALL NOT BE PLACED IN STEEL MEMBERS UNLESS SPECIFICALLY DETAILED.
13. ALL WORK SHALL BE PERFORMED IN THE SHOP OF AN APPROVED, LICENSED FABRICATOR.

## GENERAL

1. THE CONTRACTOR SHALL VERIFY ALL DIMENSIONS PRIOR TO STARTING CONSTRUCTION. THE ARCHITECT SHALL BE NOTIFIED OF ANY DISCREPANCIES OR INCONSISTENCIES.
2. THE CONTRACT STRUCTURAL DRAWINGS AND SPECIFICATIONS REPRESENT THE FINISHED STRUCTURE. THEY DO NOT INDICATE THE METHOD OF CONSTRUCTION. THE CONTRACTOR SHALL PROVIDE ALL MEASURES NECESSARY TO PROTECT THE STRUCTURE DURING CONSTRUCTION. SUCH MEASURES SHALL INCLUDE, BUT ARE NOT LIMITED TO, BRACING, SHORING FOR LOADS DUE TO CONSTRUCTION EQUIPMENT, ETC. CONTRACTOR AT HIS OWN EXPENSE SHALL ENGAGE PROPERLY QUALIFIED PERSONS TO DESIGN BRACING, SHORING, ETC. OBSERVATION VISITS TO THE SITE BY THE STRUCTURAL ENGINEER SHALL NOT INCLUDE OBSERVATION OF THE ABOVE NOTED ITEMS.
3. DIMENSIONS SHALL TAKE PRECEDENCE OVER SCALED DRAWINGS.
4. SPECIFIC NOTES AND DETAILS SHALL TAKE PRECEDENCE OVER GENERAL NOTES AND TYPICAL DETAILS.
5. WORK NOT PARTICULARLY SHOWN OR SPECIFIED SHALL BE THE SAME AS SIMILAR PARTS THAT ARE SHOWN OR SPECIFIED.
6. ALL WORK SHALL CONFORM TO THE MINIMUM STANDARDS OF THE FOLLOWING CODES:
   CALIFORNIA BUILDING CODE, 2013 EDITION AND ANY OTHER REGULATING AGENCIES WHICH MAY HAVE AUTHORITY OVER ANY PORTION OF THE WORK, INCLUDING THE STATE OF CALIFORNIA DIVISION OF INDUSTRIAL SAFETY, AND THOSE CODES AND STANDARDS LISTED IN THESE NOTES AND SPECIFICATIONS.
7. SPECIFICATIONS, CODES AND STANDARDS NOTED SHALL BE OF THE LATEST APPROVED ISSUE, INCLUDING SUPPLEMENTS, UNLESS NOTED OTHERWISE.

## PROJECT DESIGN CRITERIA

1. BASIC DESIGN LIVE LOADS:
   FLOOR : 50 PSF
   PARTITIONS : 15 PSF
2. EARTHQUAKE DESIGN CRITERIA:
   RISK CATEGORY = IV
   SEISMIC IMPORTANCE FACTOR I = 1.5
   OCCUPANCY CATEGORY = II

   MAPPED SPECTRAL RESPONSE ACCELERATION, $S_S$ = 1.605 & $S_1$ = .604

   SEISMIC DESIGN CATEGORY = D

   BASIC SEISMIC-FORCE RESISTING SYSTEM(S) = MOMENT - RESISTING SPACE FRAMES

   ANALYSIS PROCEDURE USED: EQUIVALENT LATERAL FORCE PROCEDURE

   $S_{MS}$ = 1.605g (MCE)
   $S_{M1}$ = .907g
   $S_{DS}$ = 1.07g (DBE)
   $S_{D1}$ = .604g

2. ANALYSIS PROCEDURE USED: EQUIVALENT LATERAL FORCE PROCEDURE

$$F_p = \frac{0.4\, a_p\, S_{DS}\, W_p}{\left(\frac{R_p}{I_p}\right)}\left(1 + 2\,\frac{z}{h}\right)$$

$$\frac{0.4\,(1.0)\,1.07\,W_p}{\left(\frac{2.5}{1.5}\right)}\left(1 + 2\,\frac{2}{3}\right)$$

$$= .599\, W_p$$

RESPONSE MODIFICATIONS FACTOR(S), R = 2.5, ELECTRICAL COMPONENTS

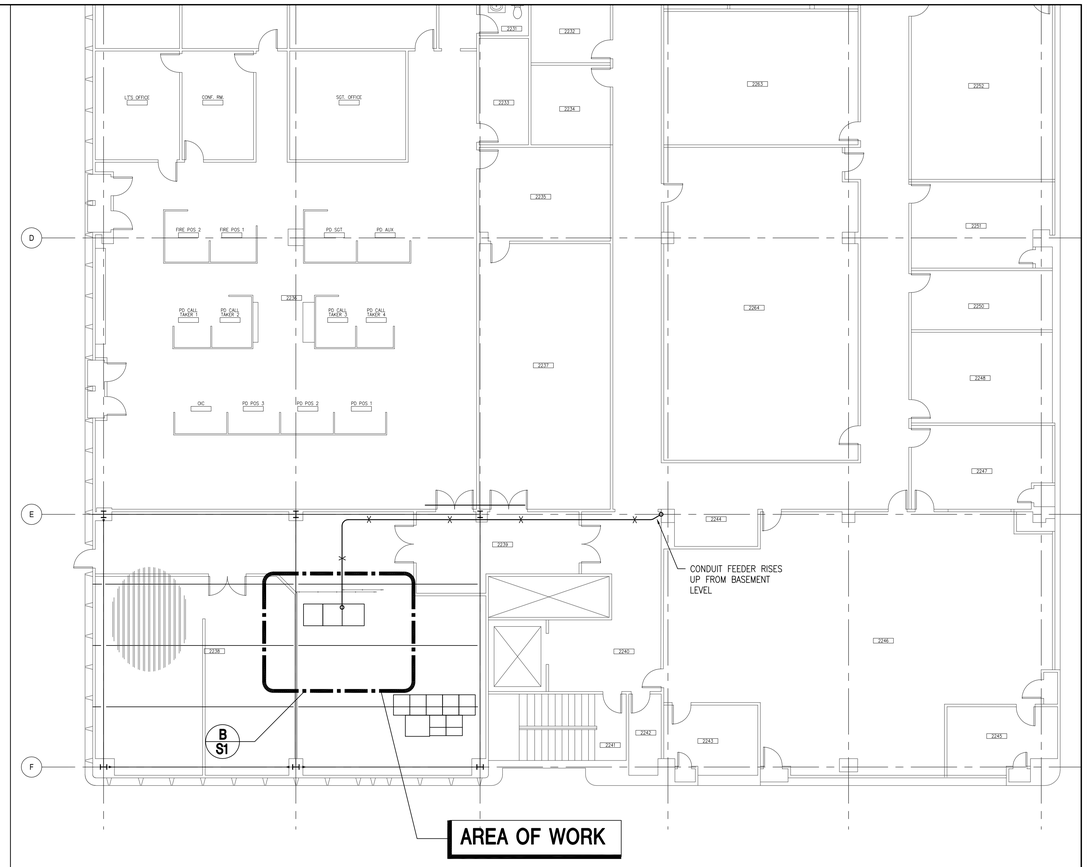


EXISTING SECOND FLOOR PLAN — SCALE: 1/8"=1'-0" (A)

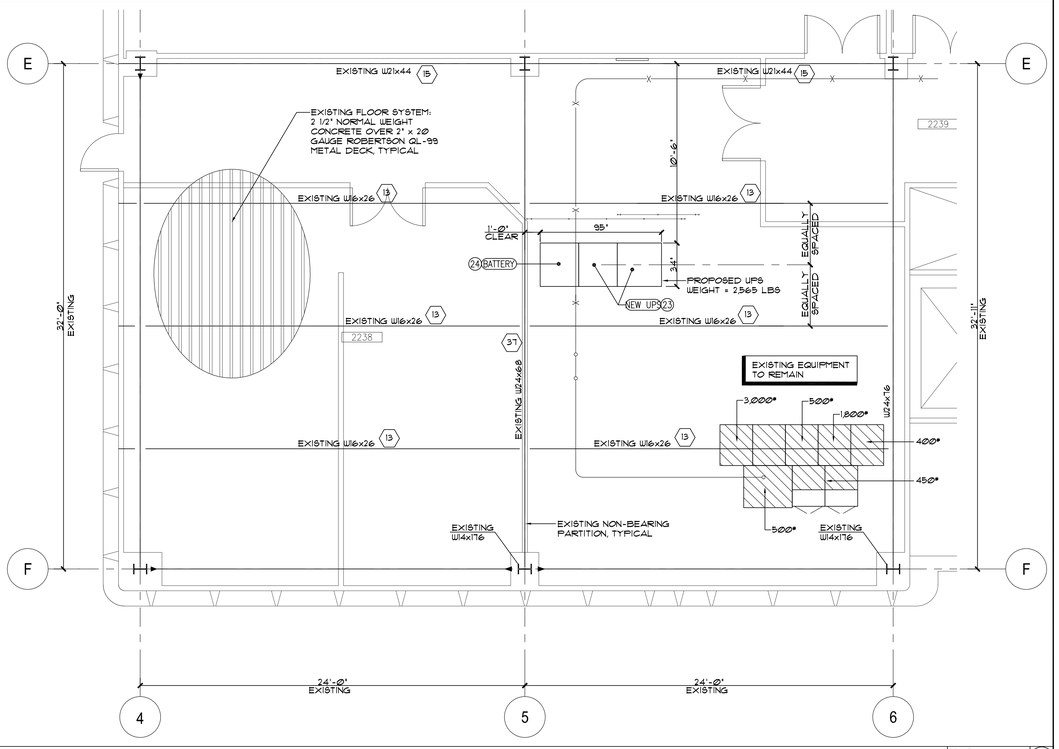


PROPOSED UPS LOCATION PLAN — SCALE: 1/4" = 1'-0" (B)

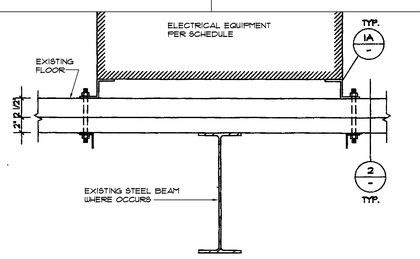


TYPICAL SECTION — SCALE: 1 1/2" = 1'-0" (4)

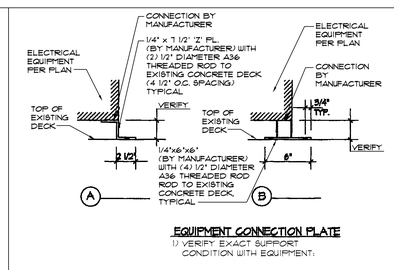


EQUIPMENT CONNECTION PLATE
1) VERIFY EXACT SUPPORT CONDITION WITH EQUIPMENT.

SCALE: 1 1/2" = 1'-0" (1)

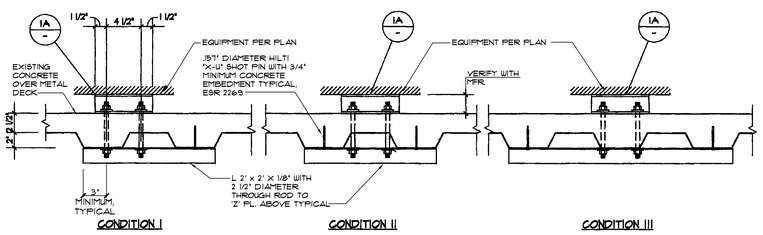


SCALE: 1 1/2" = 1'-0" (2)

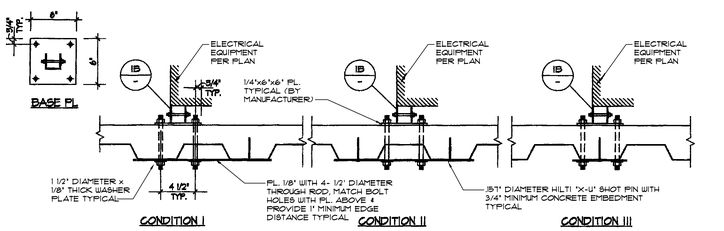


SCALE: 1 1/2" = 1'-0" (3)

| REV. | DESCRIPTION | DATE | BY |
|---|---|---|---|
| | PROGRESS ISSUE | 6/1/16 | |


BREEN Engineering Inc
19863 WEST 190TH STREET, SUITE 200
TORRANCE, CA 90504
TEL: (310) 464-8404
FAX: (310) 464-8408
WWW.BREENENG.COM


EXISTING PARTIAL SECOND FLOOR PLAN

# TORRANCE POLICE DEPARTMENT UPS REPLACEMENT PROJECT

3300 CIVIC CENTER DR., TORRANCE, CA 90505

| | |
|---|---|
| DATE: | MAY 2016 |
| SCALE: | AS NOTED |
| PROJECT NUMBER: | 307-16-001 |
| DRAWN BY: | CADpros |
| CHECKED BY: | PCP |
| DRAWING NUMBER | S1 |



REGISTERED PROFESSIONAL ENGINEER — PAUL C. PIÑA — No. S4194 — Exp. 03/17 — STRUCTURAL — STATE OF CALIFORNIA


Piña structural engineering
Paul C. Piña, Principal
19863 W. 190th St. Suite 200
Torrance, CA 90504
(310) 516-9300 office
(310) 344-5343 cell
structureroadrunner.com


COPYRIGHT ©2016 BREEN ENGINEERING, INC.

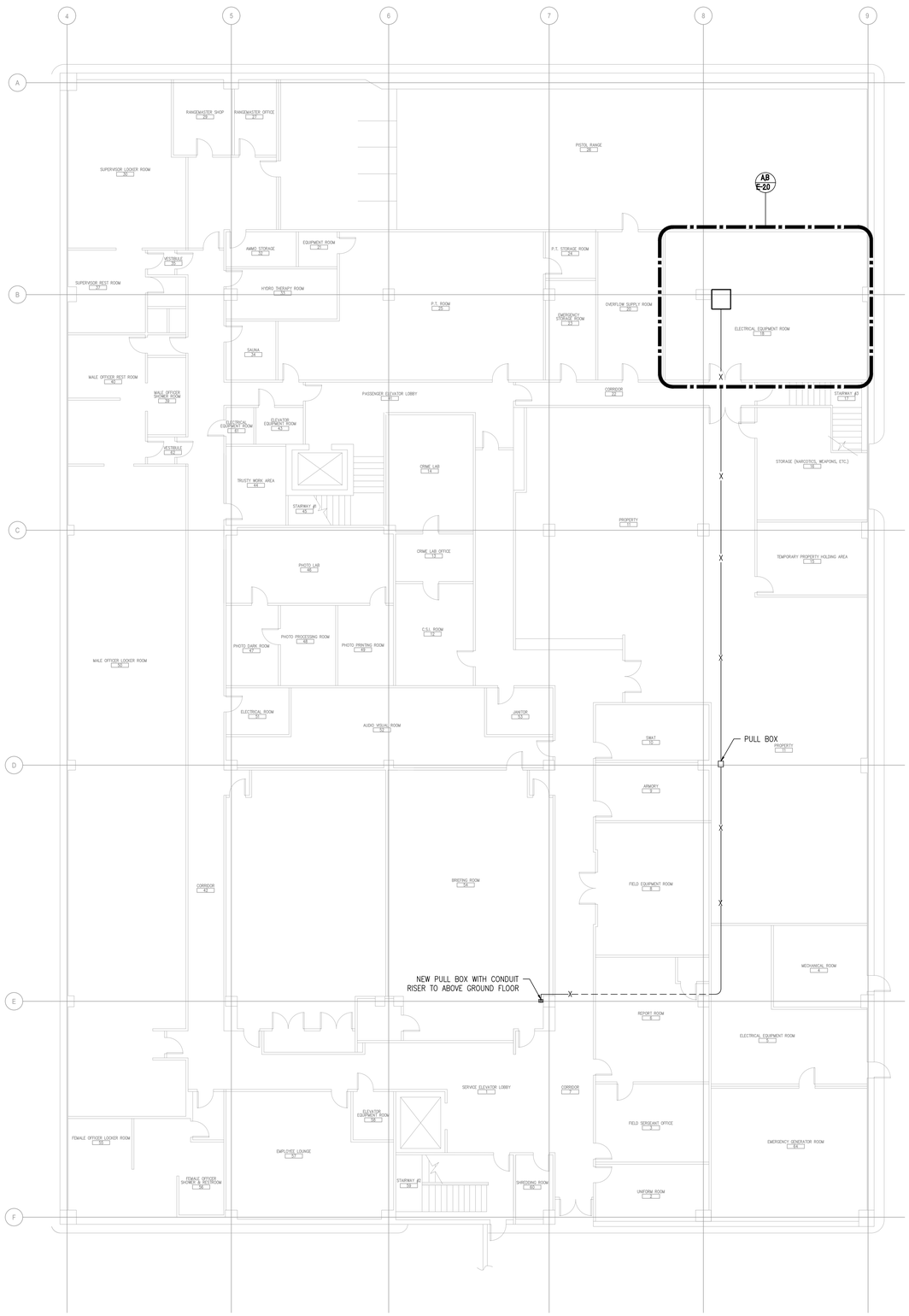


## BASEMENT FLOOR PLAN

SCALE: 1/8" = 1'-0" (1)

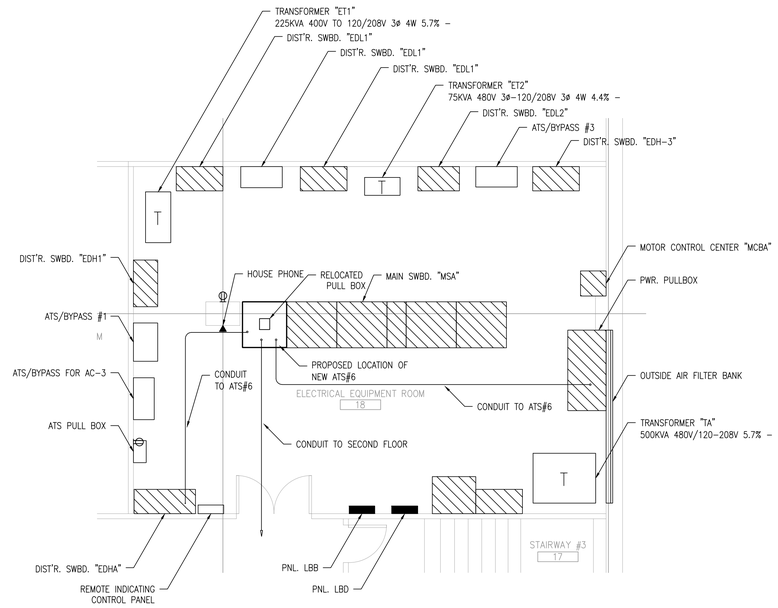


## PROPOSED ELECTRICAL ROOM FLOOR PLAN

SCALE: 1/4" = 1'-0" (B)

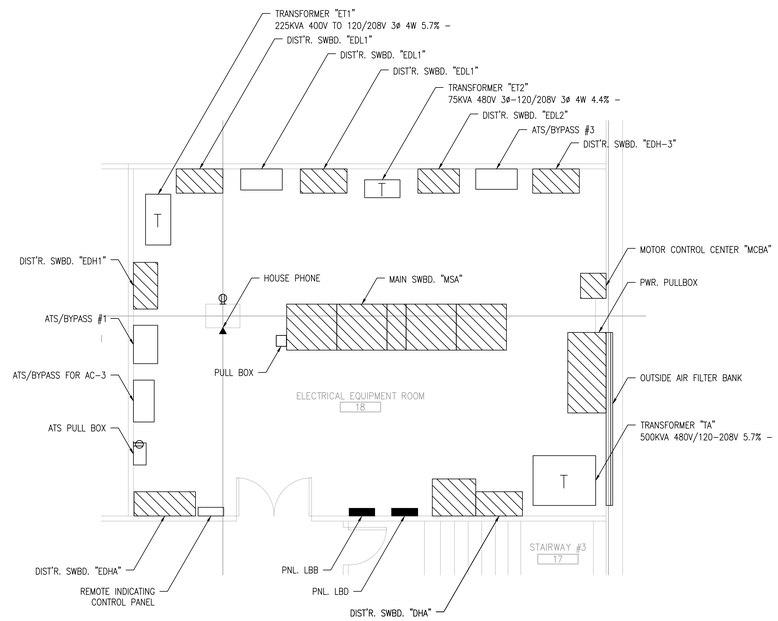


## EXISTING ELECTRICAL ROOM FLOOR PLAN

SCALE: 1/4" = 1'-0" (A)

## GENERAL NOTES

1. REFER TO SINGLE LINE DIAGRAM SHEET E-4.3 FOR CONDUIT AND WIRE SIZE.

| REV. | DESCRIPTION | DATE | BY |
|---|---|---|---|
| REV. | PLAN CHECK | 06/15/16 | |
| REV. | PROGRESS ISSUE | 06/1/16 | |

REGISTERED PROFESSIONAL ENGINEER
DESMOND MARTIN
No. E020642
Exp. 03-31-18
ELECTRICAL
STATE OF CALIFORNIA


19963 WEST 190TH STREET, SUITE 200
TORRANCE, CA 90504
TEL: (310) 464-8404
FAX: (310) 464-8408
WWW.BREENENG.COM
BREEN Engineering Inc


# ELECTRICAL BASEMENT FLOOR PLAN

# TORRANCE POLICE DEPARTMENT UPS REPLACEMENT PROJECT

3300 CIVIC CENTER DR., TORRANCE, CA 90505

| | |
|---|---|
| DATE: | MAY 2016 |
| SCALE: | AS NOTED |
| PROJECT NUMBER: | 307-16-001 |
| DRAWN BY: | SG,KD |
| CHECKED BY: | DM |
| DRAWING NUMBER | |

E-2.0



DWF/PDF Created On: Jun 29, 2016 - 8:30am Plotted By: sguite_breene Filename: H:\Projects\307 City of Torrance\16-001 - TORRANCE POLICE DEPARTMENT – REPLACEMENT\01 - CAD\Electrical\E-2.0 ELECTRICAL BASEMENT FLOOR PLAN.dwg
PLOTTED PAPER SIZE (DRAWING HAS BEEN SCALED IF DIFFERENT), ARCH FULL BLEED E1 (30.00 X 42.00 INCHES) PLOT SCALE: 1:1 PLOT STYLE: PDF & DWF.STB

COPYRIGHT ©2016 BREEN ENGINEERING, INC.

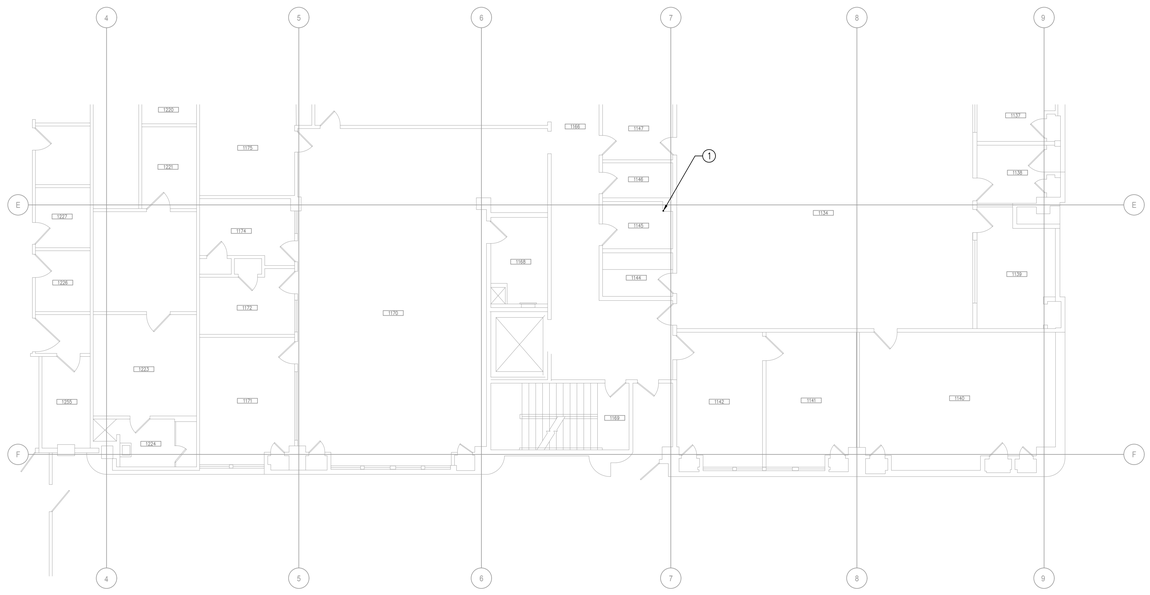


## PARTIAL GROUND FLOOR PLAN

SCALE: 1/8" = 1'-0" (1)

## REFERENCE NOTES

1. CONDUIT RISES UP FROM BASEMENT LEVEL BELOW TO LEVEL 2 ABOVE. CONTRACTOR TO FIRESTOP ALL PENETRATIONS AND PATCH & REPAIR ANY DAMAGE TO PROPERTY.

| REV. | DESCRIPTION | DATE | BY |
|---|---|---|---|
| | PLAN CHECK | 06/15/16 | |
| | PROGRESS ISSUE | 06/1/16 | |

REGISTERED PROFESSIONAL ENGINEER
DESMOND MAHONY
No. E020642
Exp. 03-31-18
ELECTRICAL
STATE OF CALIFORNIA


1983 WEST 190TH STREET, SUITE 200
TORRANCE, CA 90504
TEL: (310) 464-8404
FAX: (310) 464-8408
WWW.BREENENG.COM
BREEN Engineering Inc


ELECTRICAL GROUND PARTIAL FLOOR PLAN

# TORRANCE POLICE DEPARTMENT UPS REPLACEMENT PROJECT

3300 CIVIC CENTER DR., TORRANCE, CA 90505

| | |
|---|---|
| DATE: | MAY 2016 |
| SCALE: | AS NOTED |
| PROJECT NUMBER: | 307-16-001 |
| DRAWN BY: | SG,KD |
| CHECKED BY: | DM |
| DRAWING NUMBER | E-2.1 |



DWF/PDF Created On: Jun 29, 2016 - 8:30am Plotted By: sgulie_breene Filename: H:\Projects\307 City of Torrance\16-001 - TORRANCE POLICE DEPARTMENT - REPLACEMENT\01 - CAD\Electrical\E-2.1 ELECTRICAL GROUND FLOOR PLAN.dwg
PLOTTED PAPER SIZE (DRAWING HAS BEEN SCALED IF DIFFERENT): ARCH FULL BLEED E1 (30.00 X 42.00 INCHES) PLOT SCALE: 1:1 PLOT STYLE: PDF & DWF.STB

COPYRIGHT ©2016 BREEN ENGINEERING, INC.

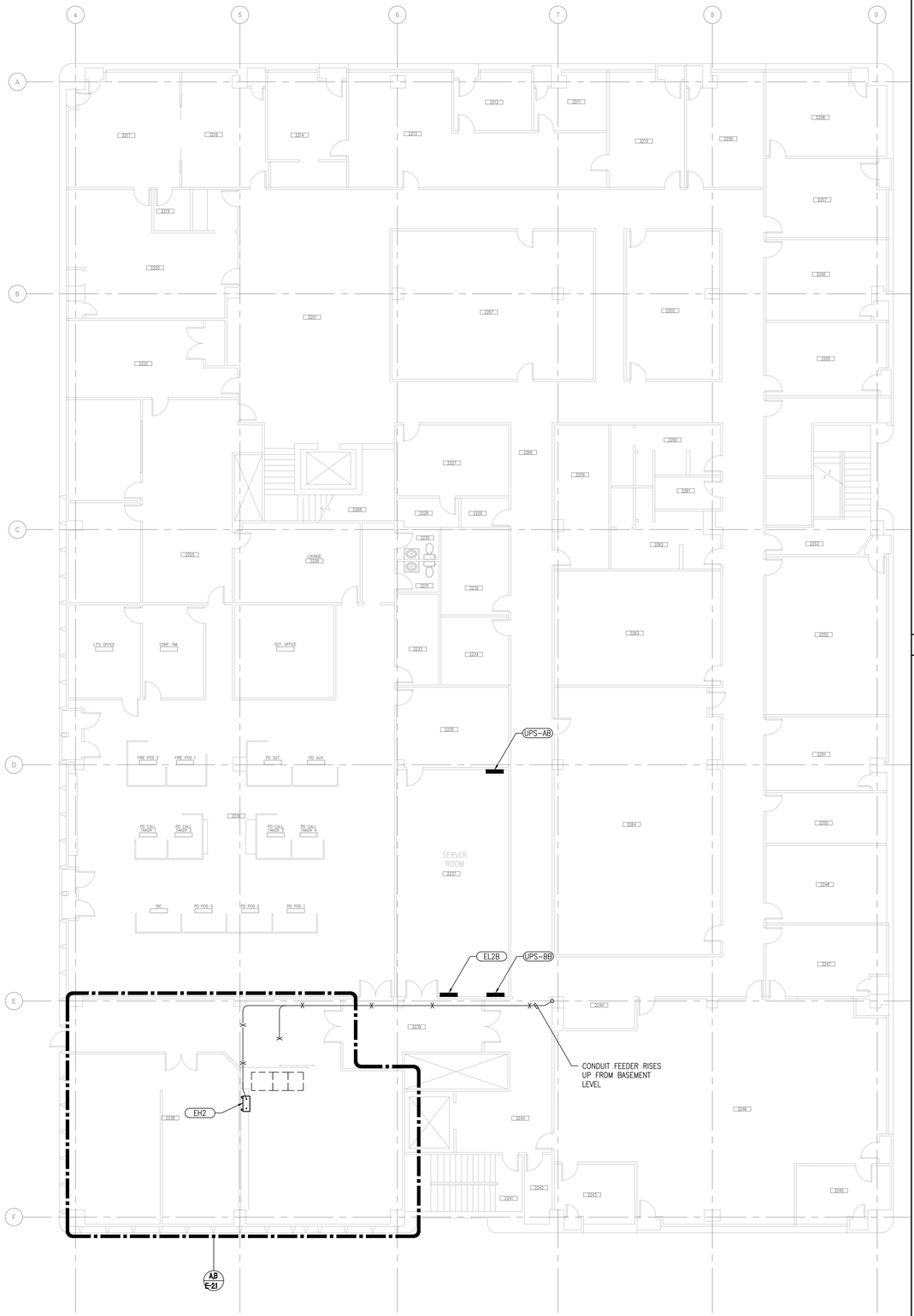


## SECOND FLOOR PLAN

SCALE: 1/8" = 1'-0" (1)

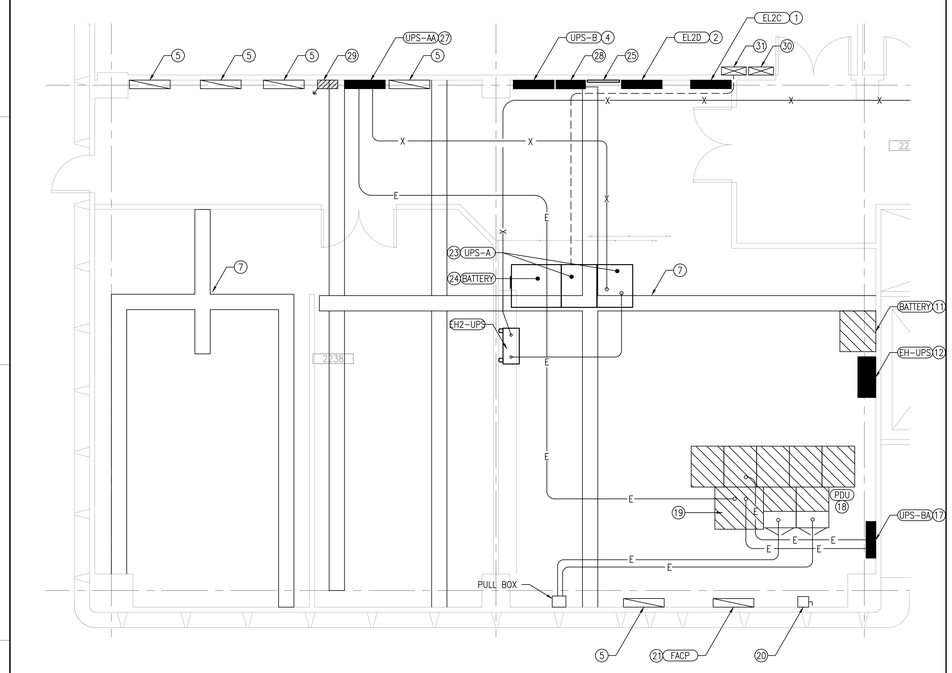


## PROPOSED ELECTRICAL ROOM FLOOR PLAN

SCALE: 1/4" = 1'-0" (B)

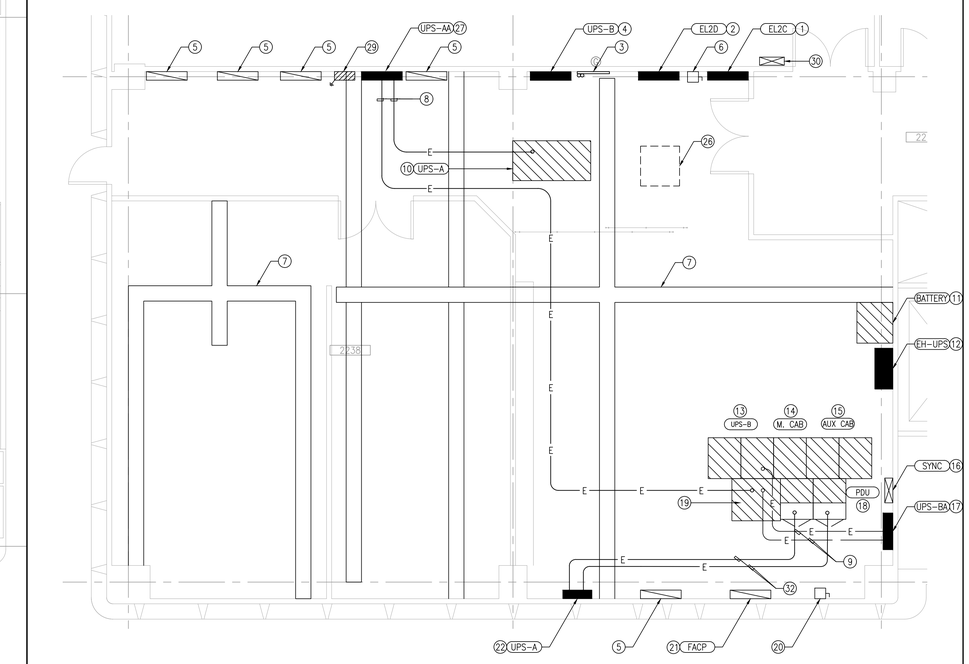


## EXISTING ELECTRICAL ROOM FLOOR PLAN

SCALE: 1/4" = 1'-0" (A)

## REFERENCE NOTES

1. EXISTING PANELBOARD "EL2C" TO BE RETAINED.
2. EXISTING PANELBOARD "EL2D" TO BE RETAINED.
3. EXISTING TELECOM BACKBOARD TO BE RELOCATED.
4. EXISTING PANELBOARD UPS-B TO BE RETAINED AND USED AS A SPLICE/ PULLBOX. PROVIDE NEW 42 CIRCUIT PANELBOARD ADJACENT AND TRANSFER (E) CIRCUITS TO NEW PANELBOARD
5. EXISTING SIGNAL SYSTEM CABINET TO BE RETAINED.
6. EXISTING "UPS-A" FEEDER JUNCTION BOX AND DISCONNECT TO BE REMOVED.
7. EXISTING HIGH LEVEL CABLE TRAY TO BE RETAINED. CONTRACTOR TO REMOVE REDUNDANT POWER OUTLETS.
8. EXISTING UPS A CONDUIT TO BE REMOVED.
9. EXISTING UPS B CONDUIT TO BE RETAINED AND REUSED.
10. EXISTING "LIEBERT" 40KVA UPS-A SYSTEM TO BE REMOVED.
11. EXISTING MGE UPS-B BATTERY CABINET TO BE RETAINED.
12. EXISTING PANEL "EH-UPS" TO BE RETAINED.
13. EXISTING MGE 100KVA UPS-B TO BE RETAINED.
14. EXISTING MGE UPS MAINTENANCE AND BY PASS CABINET TO BE RETAINED.
15. EXISTING MGE UPS AUX CABINET. CONTRACTOR TO DISCONNECT EXISTING PHASE SHIFT TRANSFORMERS.
16. EXISTING UPS SYNCHRONIZING INDICATOR PANEL TO BE REMOVED.
17. EXISTING PANEL "UPS-BA" TO BE RETAINED.
18. EXISTING STATIC SWITCH POWER DISTRIBUTION UNIT TO BE RETAINED AND REUSED.
19. EXISTING STATIC SWITCH CABINET TO BE RETAINED AND REUSED.
20. EXISTING DISCONNECT TO BE RETAINED.
21. EXISTING FIRE ALARM PANEL TO BE RETAINED.
22. EXISTING PANELBOARD "UPS-A" TO BE REMOVED. CONTRACTOR TO DEMO AND REMOVE EXISTING REDUNDANT CIRCUITS. DIVERT (3) EXISTING LIVE CIRCUITS TO PDU PANELBOARD 'A'.
23. NEW MGE 100KVA UPS SYSTEM.
24. NEW 15 MINUTE BATTERY CABINET.
25. RELOCATED (E) TELECOM BACKGROUND.
26. APPROX LOCATION OF TEMPORARY UPS UNIT INSTALLED AS PART OF THIS SCOPE TO SUPPORT THE CRITICAL LOAD WHILE PREPARATION WORK IS BEING UNDERTAKEN.
27. EX PANEL UPS-AA TO BE RETAINED AND MODIFIED TO ACCOMODATE NEW INPUT FROM UPS-A AND OUTPUTS TO (E) STATIC SWITCH AND (E) PANELBOARD "UPS-AB" .
28. NEW PANEL BOARD LOCATED ADJACENT TO EXISTING PANEL AND EXISTING CIRCUITS DIVERTED TO THIS NEW PANEL.
29. EXISTING GROUNDING BUS ON WALL TO BE RETAINED AND REUSED.
30. EXISTING UPS-B REMOTE ANNUNCIATOR PANEL(ON WALL) TO BE RETAINED.
31. NEW UPS-A REMOTE ANNUNCIATOR PANEL. CONDUIT AND WIRE PER MANUFACTURERS INSTRUCTIONS.
32. PANEL UPS-A CONDUIT TO BE RETAINED AND REUSED. BRANCH CIRCUIT WIRING FOR RECONNECTION OF EXISTING CIRCUITS 11, 21, 22.

| REV. | DESCRIPTION | DATE | BY |
|---|---|---|---|
| REV. | PLAN CHECK | 06/15/16 | |
| REV. | PROGRESS ISSUE | 06/1/16 | |

REGISTERED PROFESSIONAL ENGINEER
DESMOND MAHONY
No. E020642
Exp. 03-31-18
ELECTRICAL
STATE OF CALIFORNIA


BREEN Engineering Inc.
19963 WEST 190TH STREET, SUITE 200
TORRANCE, CA 90503-5404
TEL: (310) 464-8404
FAX: (310) 464-8408
WWW.BREENENG.COM


# ELECTRICAL SECOND FLOOR PLAN

# TORRANCE POLICE DEPARTMENT UPS REPLACEMENT PROJECT

3300 CIVIC CENTER DR., TORRANCE, CA 90505

| | |
|---|---|
| DATE: | MAY 2016 |
| SCALE: | AS NOTED |
| PROJECT NUMBER: | 307-16-001 |
| DRAWN BY: | SQ,KD |
| CHECKED BY: | DM |
| DRAWING NUMBER | |

E-2.2



DWF/PDF Created On: Jun 29, 2016 - 8:30am Plotted By: sgulle_breene Filename: H:\Projects\307 City of Torrance\16-001 - TORRANCE POLICE DEPARTMENT - REPLACEMENT\01 - CAD\Electrical\E-2.2 ELECTRICAL SECOND FLOOR PLAN.dwg
PLOTTED PAPER SIZE (DRAWING HAS BEEN SCALED IF DIFFERENT), ARCH FULL BLEED E1 (30.00 X 42.00 INCHES) PLOT SCALE: 1:1 PLOT STYLE: PDF & DWF.STB

COPYRIGHT ©2016 BREEN ENGINEERING, INC.

## REFERENCE NOTES

1. EXISTING UPS AND 200A DISCONNECT SWITCH TO BE DEMO AND REMOVED.
2. EXISTING PANELBOARD UPS-A TO BE DEMO AND REMOVED, INCLUDING REDUNDANT BRANCH CIRCUIT WIRING. DIVERT (E) LIVE CIRCUITS TO PDU PANELBOARD 'A'. PROVIDE 20A CIRCUIT BREAKERS AS REQUIRED.

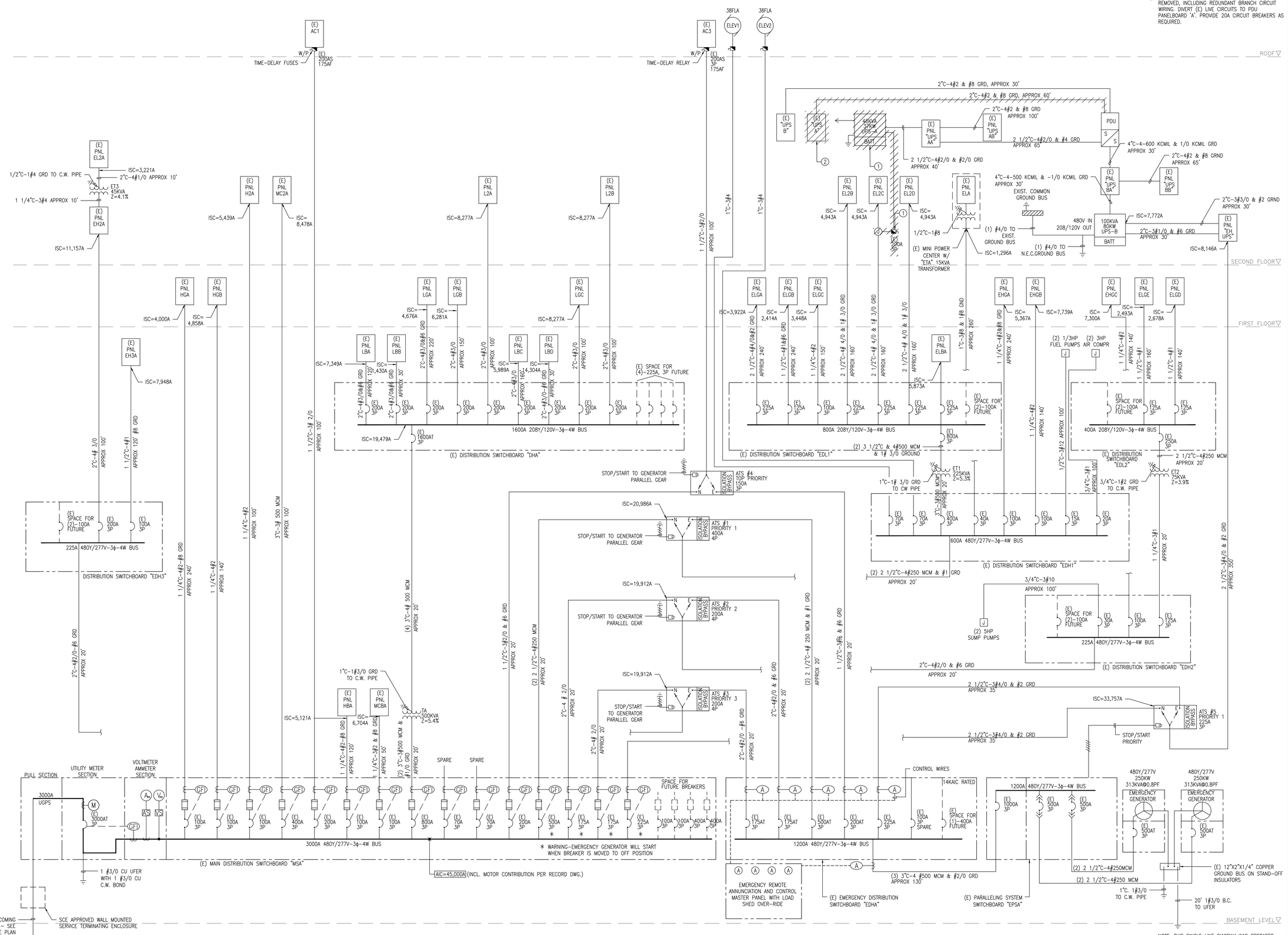


NOTE: THIS SINGLE LINE DIAGRAM WAS PREPARED USING ORIGINAL AS-BUILT DRAWINGS, NOT ALL CIRCUIT BREAKER SIZES, CONDUIT SIZES, WIRE SIZES, LENGTHS OF RUN AND AIC RATINGS HAVE BEEN FIELD VERIFIED.
BEFORE STARTING WORK THE CONTRACTOR SHALL VERIFY EXISTING CONDITIONS AND REPORT ANY DEVIATIONS TO THE CITY ENGINEER.

| REV. | DESCRIPTION | DATE | BY |
|---|---|---|---|
| REV. | PLAN CHECK | 06/15/16 | |
| REV. | PROGRESS ISSUE | 06/1/16 | |

REGISTERED PROFESSIONAL ENGINEER
DIMITRIOS MAXIMOS
No. E020642
Exp. 03-31-18
ELECTRICAL
STATE OF CALIFORNIA


1983 WEST 190TH STREET, SUITE 200
TORRANCE, CA 90504
TEL: (310) 464-8404
FAX: (310) 464-8408
WWW.BREENENG.COM
BREEN Engineering Inc.


# ELECTRICAL EXISTING SINGLE LINE DIAGRAM

# TORRANCE POLICE DEPARTMENT UPS REPLACEMENT PROJECT

3300 CIVIC CENTER DR, TORRANCE, CA 90505

| | |
|---|---|
| DATE: | MAY 2016 |
| SCALE: | N.T.S. |
| PROJECT NUMBER: | 307-16-001 |
| DRAWN BY: | SG,KD |
| CHECKED BY: | DM |
| DRAWING NUMBER | E-4.1 |



DWF/PDF Created On: Jun 29, 2016 - 8:30am Plotted By: sgutie_breene Filename: H:\Projects\307 City of Torrance\16-001 - TORRANCE POLICE DEPARTMENT - REPLACEMENT\01 - CAD\Electrical\E-4.1 ELECTRICAL EXISTING SINGLE LINE DIAGRAM.dwg
PLOTTED PAPER SIZE (DRAWING HAS BEEN SCALED IF DIFFERENT): ARCH FULL BLEED E1 (30.00 X 42.00 INCHES) PLOT SCALE: 1:1 PLOT STYLE: PDF & DWF.STB
COPYRIGHT ©2016 BREEN ENGINEERING, INC.

# TORRANCE POLICE DEPARTMENT
## UPS REPLACEMENT PROJECT
3300 CIVIC CENTER DR, TORRANCE, CA 90505

**ELECTRICAL EXISTING SINGLE LINE DIAGRAM - UPS ARRANGEMENT**

| | |
|---|---|
| DATE: | MAY 2016 |
| SCALE: | N.T.S. |
| PROJECT NUMBER: | 307-16-001 |
| DRAWN BY: | SG,KD |
| CHECKED BY: | DM |
| DRAWING NUMBER | E-4.2 |

8 OF 12


BREEN Engineering Inc
1983 WEST 190TH STREET, SUITE 200
TORRANCE, CA 90504
TEL: (310) 464-8404
FAX: (310) 464-8408
WWW.BREENENG.COM


REGISTERED PROFESSIONAL ENGINEER DESMOND MANOVIL No. E020642 Exp. 03-31-18 ELECTRICAL ★ STATE OF CALIFORNIA

| REV. | DESCRIPTION | DATE | BY |
|---|---|---|---|
| REV. | PLAN CHECK | 06/15/16 | |
| REV. | PROGRESS ISSUE | 06/1/16 | |

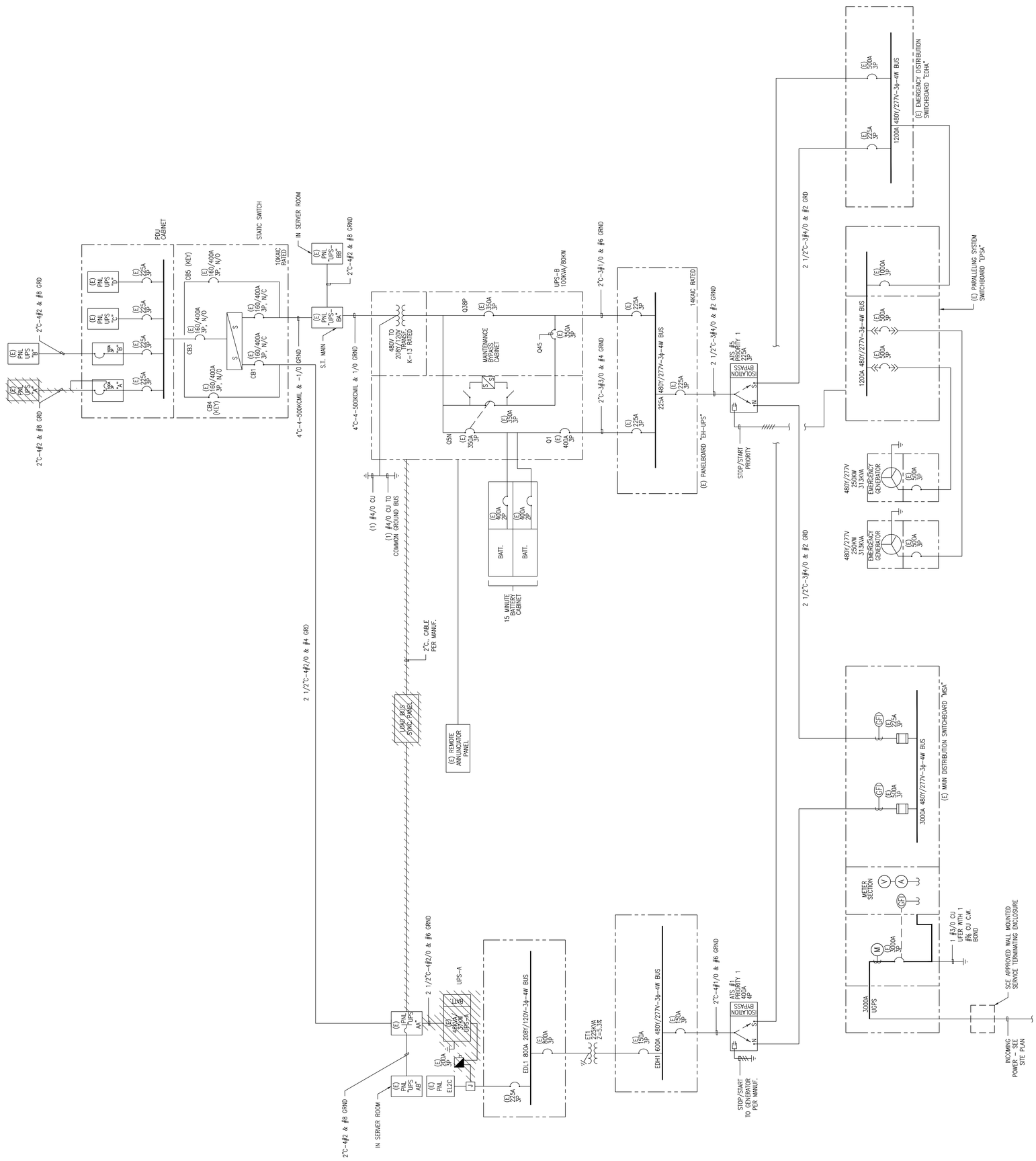



COPYRIGHT ©2016 BREEN ENGINEERING, INC.


DWF/PDF Created On: May 31, 2016 - 11:27am Plotted By: ccalbo_beiser Filename: H:\Projects\307 City of Torrance\16-001 - TORRANCE POLICE DEPARTMENT - REPLACEMENT\01 - CAD\Electrical\E-4.6 ELECTRICAL PANEL SCHEDULES.dwg
PLOTTED PAPER SIZE (DRAWING HAS BEEN SCALED IF DIFFERENT): ARCH FULL BLEED E1 (30.00 X 42.00 INCHES) PLOT SCALE: 1:1 PLOT STYLE: PDF & DWF.STB

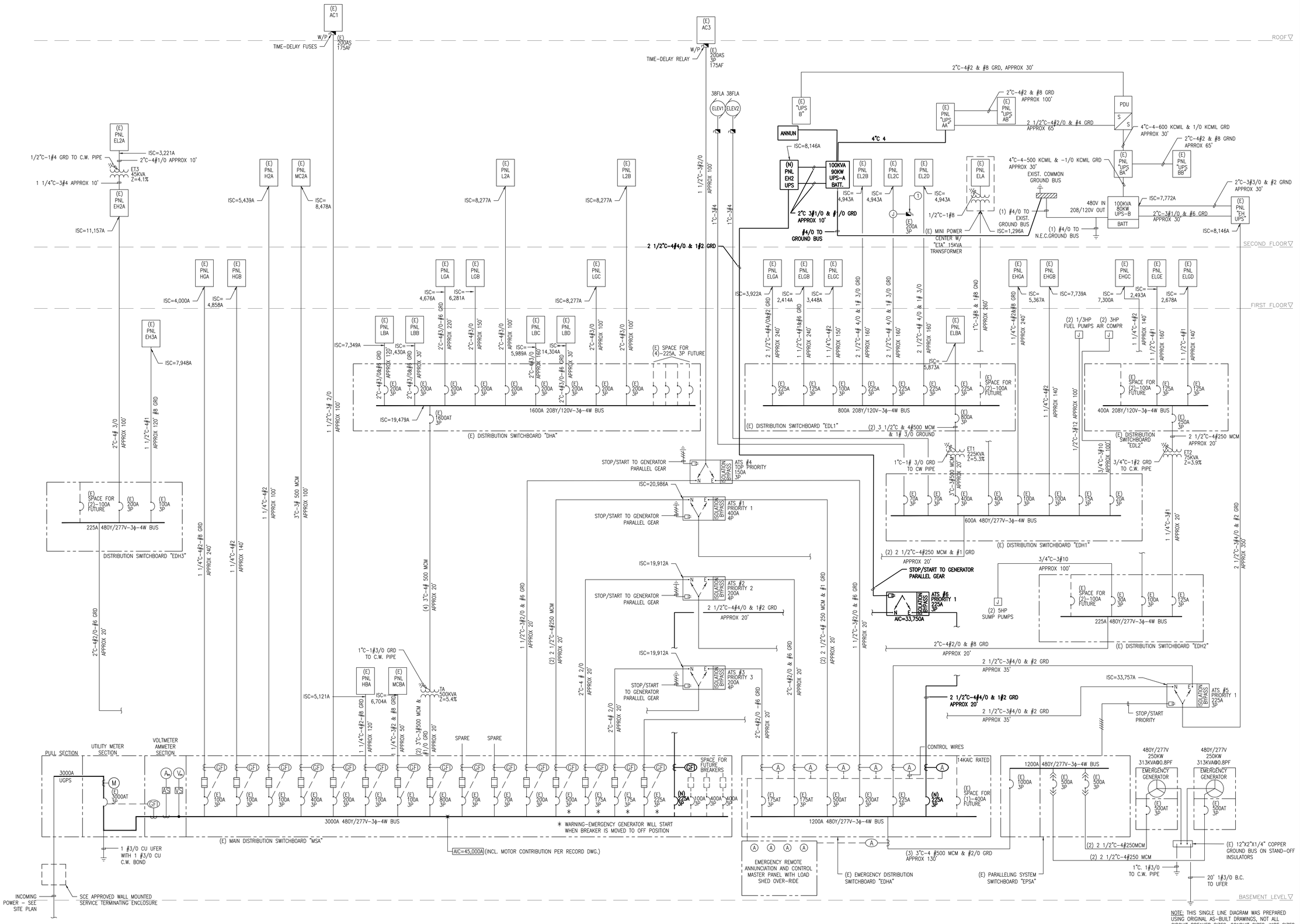


NOTE: THIS SINGLE LINE DIAGRAM WAS PREPARED USING ORIGINAL AS-BUILT DRAWINGS, NOT ALL CIRCUIT BREAKER SIZES, CONDUIT SIZES, WIRE SIZES, LENGTHS OF RUN AND AIC RATINGS HAVE BEEN FIELD VERIFIED.
BEFORE STARTING WORK THE CONTRACTOR SHALL VERIFY EXISTING CONDITIONS AND REPORT ANY DEVIATIONS TO THE CITY ENGINEER.

| REV. | DESCRIPTION | DATE | BY |
|---|---|---|---|
| REV. | PLAN CHECK | 06/15/16 | |
| REV. | PROGRESS ISSUE | 06/1/16 | |

REGISTERED PROFESSIONAL ENGINEER
DESMOND MANTONG
No. E020642
EXP. 03-31-18
ELECTRICAL
STATE OF CALIFORNIA


1983 WEST 190TH STREET, SUITE 200
TORRANCE, CA 90504
TEL: (310) 464-8404
FAX: (310) 464-8408
WWW.BREENENG.COM
BREEN Engineering Inc.


# ELECTRICAL NEW SINGLE LINE DIAGRAM

# TORRANCE POLICE DEPARTMENT UPS REPLACEMENT PROJECT

3300 CIVIC CENTER DR, TORRANCE, CA 90505

| | |
|---|---|
| DATE: | MAY 2016 |
| SCALE: | NONE |
| PROJECT NUMBER: | 307-16-001 |
| DRAWN BY: | SG,KD |
| CHECKED BY: | DM |
| DRAWING NUMBER | E-4.3 |



DWF/PDF Created On: Jun 29, 2016 - 8:30am Plotted By: sgulie_breene Filename: H:\Projects\307 City of Torrance\16-001 - TORRANCE POLICE DEPARTMENT - REPLACEMENT\01 - CAD\Electrical\E-4.3 ELECTRICAL NEW SINGLE LINE DIAGRAM.dwg
CURRENT PHASE: ##### CURRENT REVISION: ##### #####

COPYRIGHT ©2016 BREEN ENGINEERING, INC.

## REFERENCE NOTES

1. RECONFIGURE EXISTING PANEL BOARD TO ACCEPT NEW UPS INPUT AND OUTPUT CURRENT BREAKERS.

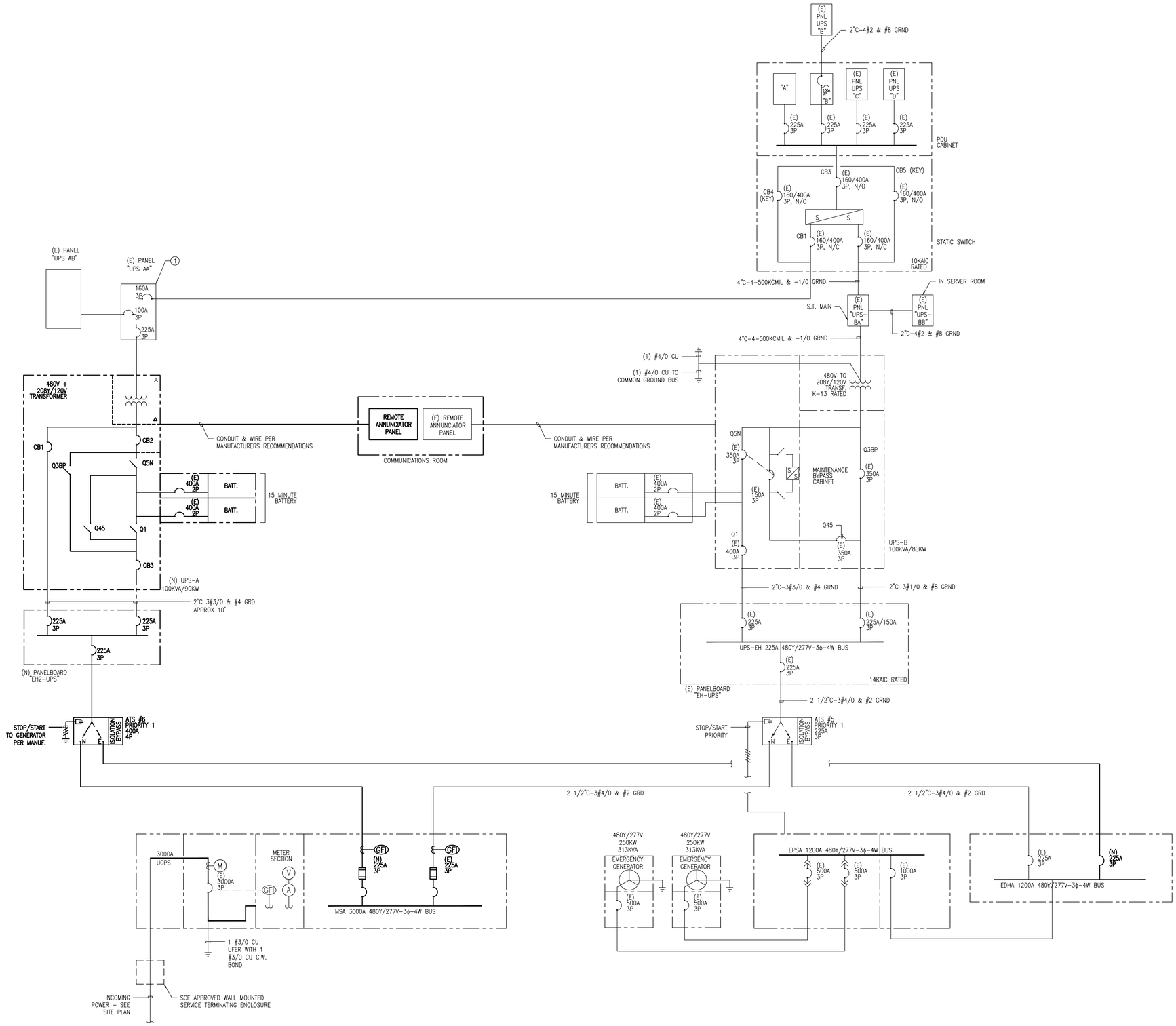


| REV. | DESCRIPTION | DATE | BY |
|---|---|---|---|
| REV. | PLAN CHECK | 06/15/16 | |
| REV. | PROGRESS ISSUE | 06/1/16 | |

REGISTERED PROFESSIONAL ENGINEER DESMOND MAHONY No. E020642 Exp. 03-31-18 ELECTRICAL STATE OF CALIFORNIA


1983 WEST 190TH STREET, SUITE 200
TORRANCE, CA 90504
TEL: (310) 464-8404
FAX: (310) 464-8408
WWW.BREENENG.COM
BREEN Engineering Inc


**ELECTRICAL NEW SINGLE LINE DIAGRAM - UPS ARRANGEMENT**

# TORRANCE POLICE DEPARTMENT UPS REPLACEMENT PROJECT

3300 CIVIC CENTER DR, TORRANCE, CA 90505

| | |
|---|---|
| DATE: | MAY 2016 |
| SCALE: | N.T.S. |
| PROJECT NUMBER: | 307-16-001 |
| DRAWN BY: | SG,KD |
| CHECKED BY: | DM |
| DRAWING NUMBER | E-4.4 |



DWF/PDF Created On: May 31, 2016 - 11:27am Plotted By: ccalbo_beiser Filename: H:\Projects\307 City of Torrance\16-001 - TORRANCE POLICE DEPARTMENT - REPLACEMENT\01 - CAD\Electrical\E-4.6 ELECTRICAL PANEL SCHEDULES.dwg
PLOTTED PAPER SIZE (DRAWING HAS BEEN SCALED IF DIFFERENT): ARCH FULL BLEED E1 (30.00 X 42.00 INCHES) PLOT SCALE: 1:1 PLOT STYLE: PDF & DWF.STB

COPYRIGHT ©2016 BREEN ENGINEERING, INC.

## STEP #8 - COMPLETION (8)

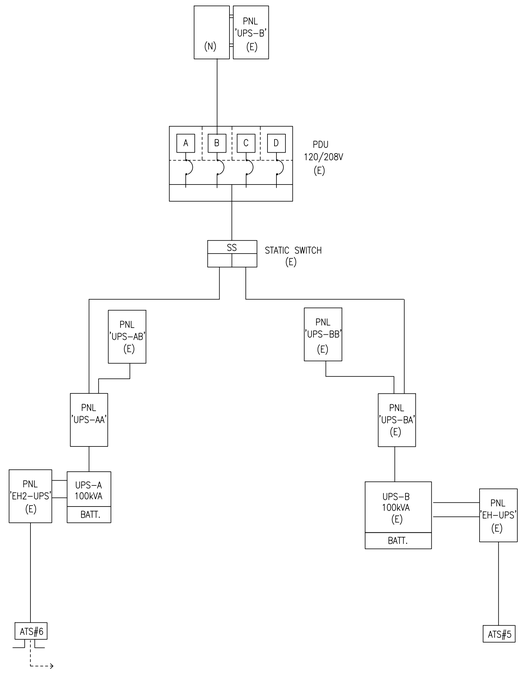


## STEP #6 TRANSFER TO NEW UPS (6)

### REFERENCE NOTES

1. INSTALL NEW CONNECTION FROM UPS-A OUTPUT TO EXISTING PANELBOARD "UPS-AA".
2. WHEN UPS-A IS CONNECTED AND ENERGIZED, DISCONNECT FEEDER FROM TEMP UPS PANEL TO PANEL "AA".
3. TRANSFER EXISTING BRANCH CIRCUITS IN PANEL "UPS B" TO NEW PANELBOARD. CONTRACTOR TO USE THE EXISTING PANELBOARD AS A SPLICE BOX.
4. DISCONNECT AND REMOVE EXISTING FEEDER WIRE AND CONDUIT.
5. PROVIDE CITY OF TORRANCE POLICE DEPT WRITTEN NOTICE OF POWER OUTAGE AND CARRY OUT WORK DURING OFF-HOURS PERIOD.

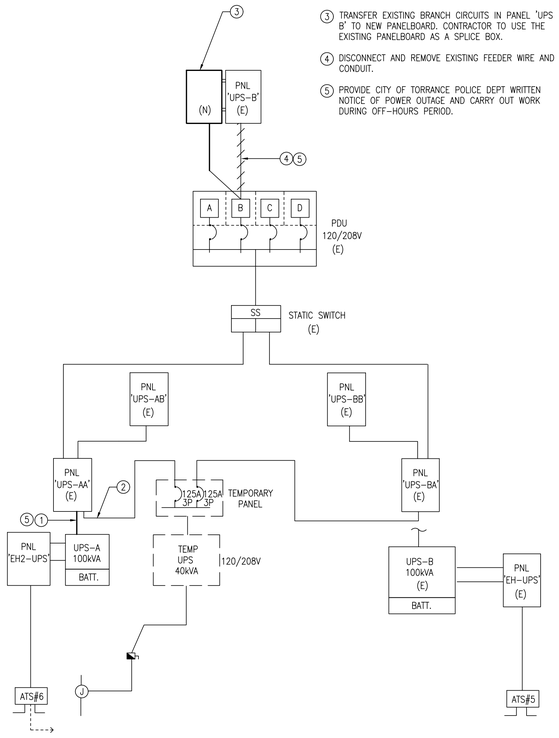


## STEP #4 REMOVE PANEL UPS-A (4)

### REFERENCE NOTES

1. DEMO AND REMOVE (E) REDUNDANT BRANCH CIRCUITRY AND OUTLETS CONNECTED TO PANELBOARD. DIVERT EXISTING (3) LIVE CIRCUITS TO (E) PDU PANELBOARD A.
2. DEMO AND REMOVED EXISTING PANELBOARD "UPS-A".
3. DEMO AND REMOVE (E) UPS.
4. PROVIDE CITY OF TORRANCE POLICE DEPT WRITTEN NOTICE OF POWER OUTAGE AND CARRY OUT WORK DURING OFF-HOURS PERIOD.

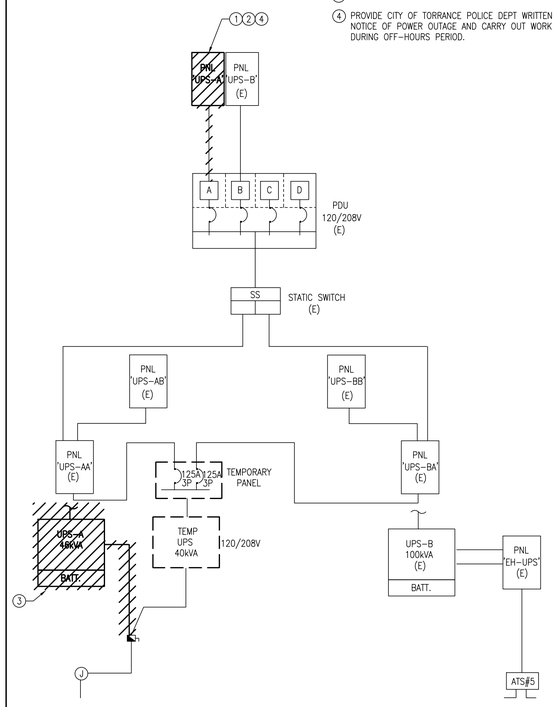


## STEP #2 INSTALL TEMP UPS (2)

### REFERENCE NOTES

1. SPLICE CONNECT TO EXISTING 200A 3P, 120/208V FUSE DISCONNECT. UPS-A TO BE OFF-LINE SUPPORTING THE LOAD ON BATTERY WHILE THE CONNECTION IS MADE TO THE FUSE DISCONNECT.
2. SUPPLY AND INSTALL TEMPORARY 40KVA UPS UNIT (10 MINUTE INTERNAL BATTERY AUTONOMY).
3. TEMPORARY 200A DISTRIBUTION PANEL WITH 125A 3P CIRCUIT BREAKERS.

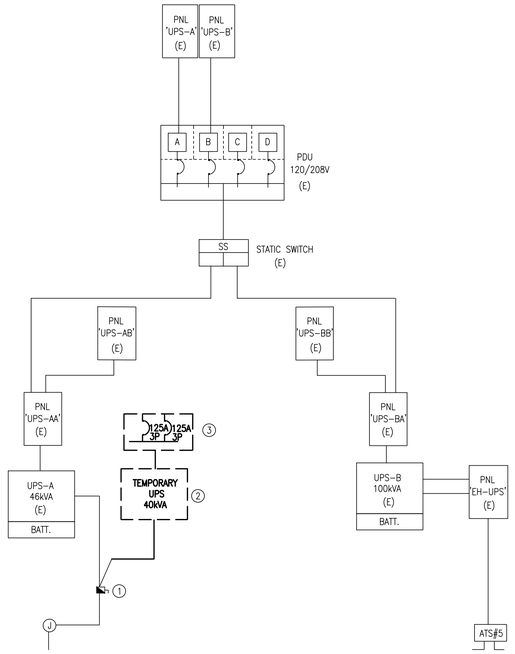


## STEP #7 REMOVE TEMP UPS (7)

### REFERENCE NOTES

1. DEMO AND REMOVE TEMPORARY UPS AND PANEL.
2. DEMO AND REMOVE EXISTING 200A 3P DISCONNECT.
3. REFEED PANEL UPS BA FROM (E) UPS B.
4. PROVIDE CITY OF TORRANCE POLICE DEPT WRITTEN NOTICE OF POWER OUTAGE AND CARRY OUT WORK DURING OFF-HOURS PERIOD.

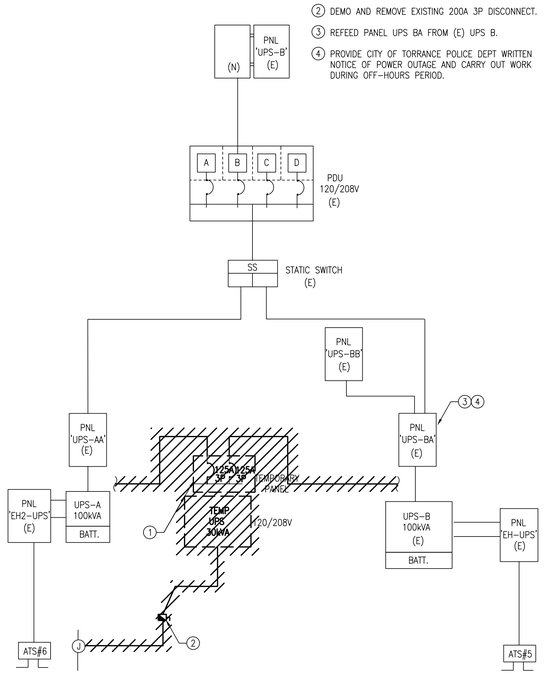


## STEP #5 INSTALL NEW UPS & ATS #6 (5)

### REFERENCE NOTES

1. INSTALL NEW ATS IN BASEMENT ELECTRICAL ROOM CONNECT TO NORMAL AND EM. POWER SWITCHBOARDS.
2. INSTALL GENERATOR CONTROL WIRING, TEST OPERATION OF ATS AND GENERATOR.
3. INSTALL NEW FEEDER CABLE FROM ATS TO LEVEL 2 DATA ROOM.
4. INSTALL NEW UPS SYSTEM TEST PHASE ROTATION AND SYNCHRONIZE WITH (E) UPS-B.
5. INSTALL NEW FEEDER AND 42 BREAKER CIRCUIT PANEL ADJACENT TO EXISTING PANEL "UPS-B". INSTALL CONNECTING NIPPLED PATHWAYS BETWEEN PANELBOARDS.
6. PROVIDE CITY OF TORRANCE POLICE DEPT WRITTEN NOTICE OF POWER OUTAGE AND CARRY OUT WORK DURING OFF-HOURS PERIOD.

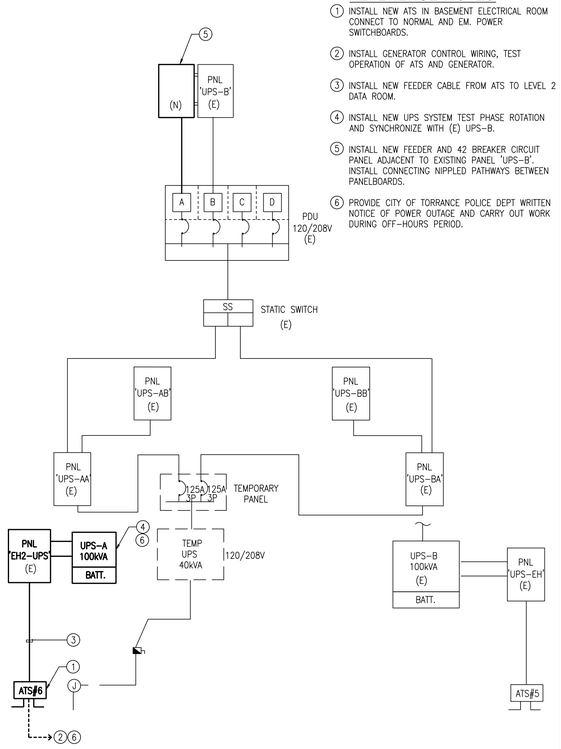


## STEP #3 BACK FEED (E) LOAD (3)

### REFERENCE NOTES

1. INSTALL TEMPORARY FEEDER FROM TEMP UPS TO EXISTING PANEL "UPS-AA".
2. INSTALL TEMPORARY FEEDER FROM TEMP UPS TO EXISTING PANEL "UPS-BA"
3. PROVIDE CITY OF TORRANCE POLICE DEPT WRITTEN NOTICE OF POWER OUTAGE AND CARRY OUT WORK DURING OFF-HOURS PERIOD.

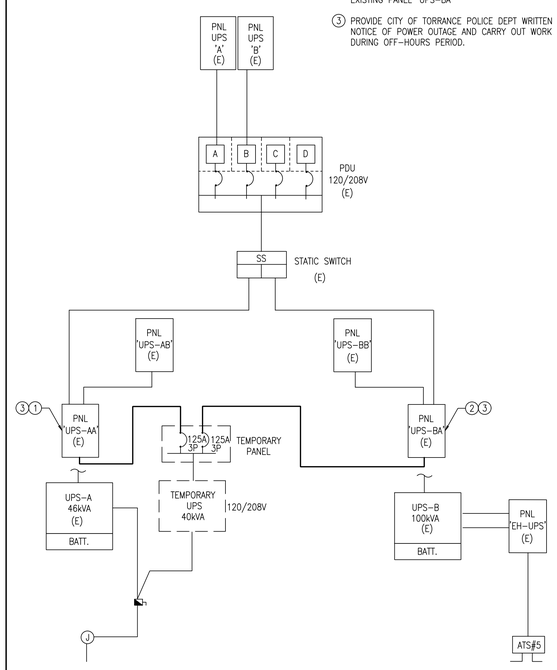


## STEP #1 EXISTING INSTALLATION (1)

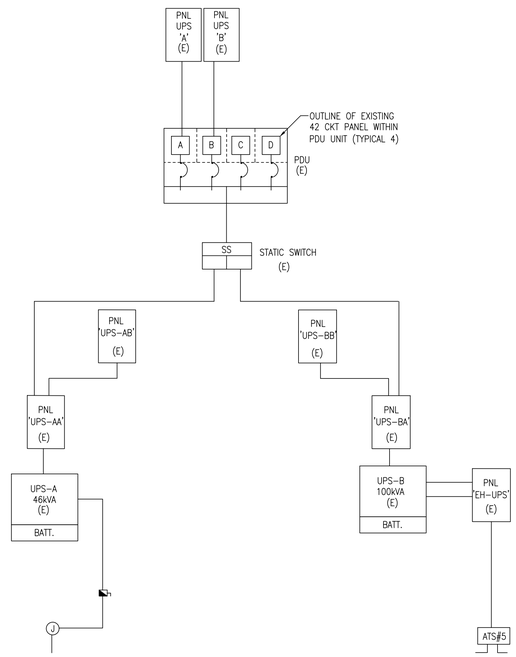


CONTRACTOR SHALL VERIFY FIELD CONDITIONS PRIOR TO COMMENCING ANT WORK

| REV. | DESCRIPTION | DATE | BY |
|---|---|---|---|
| REV. | PLAN CHECK | 06/15/16 | |
| REV. | PROGRESS ISSUE | 06/1/16 | |

REGISTERED PROFESSIONAL ENGINEER
DESMOND MANLOVE
No. E020642
Exp. 03-31-18
ELECTRICAL
STATE OF CALIFORNIA


1983 WEST 190TH STREET, SUITE 200
TORRANCE, CA 90504
TEL: (310) 464-8404
FAX: (310) 464-8408
WWW.BREENENG.COM
BREEN Engineering Inc.


# ELECTRICAL SEQUENCE OF CONNECTION

# TORRANCE POLICE DEPARTMENT UPS REPLACEMENT PROJECT

3300 CIVIC CENTER DR., TORRANCE, CA 90505

| | |
|---|---|
| DATE: | MAY 2016 |
| SCALE: | N.T.S. |
| PROJECT NUMBER: | 307-16-001 |
| DRAWN BY: | SG,KD |
| CHECKED BY: | DM |
| DRAWING NUMBER | E-4.5 |



DWF/PDF Created On: Jun 29, 2016 - 8:30am Plotted By: sgutie_breene Filename: H:\Projects\307 City of Torrance\16-001 - TORRANCE POLICE DEPARTMENT - REPLACEMENT\01 - CAD\Electrical\E-4.5 ELECTRICAL SEQUENCE OF CONNECTION.dwg
PLOTTED PAPER SIZE (DRAWING HAS BEEN SCALED IF DIFFERENT), ARCH FULL BLEED E1 (30.00 X 42.00 INCHES) PLOT SCALE: 1:1, PLOT STYLE: PDF & DWF.STB

COPYRIGHT ©2016 BREEN ENGINEERING, INC.

## PANEL UPS-A

208Y/120 VOLTS | 3 PHASE | 4 WIRE | MAIN BKR: MLO | LOCATION: SECOND FLOOR ELECTRICAL ROOM | 225A A. BUSSING | FEEDER | ENTER CAB'T. AT: VERIFY | SURFACE MTG.

| LOCATION | VOLT AMPS ϕA | ϕB | ϕC | LTG or - | REC | MIS | CIR | BKR | BKR | CIR | MIS | REC | LTG or LCL | VOLT AMPS ϕA | ϕB | ϕC | LOCATION |
|---|---|---|---|---|---|---|---|---|---|---|---|---|---|---|---|---|---|
| SPARE | 0 | | | – | – | – | 1 | 20/1 | 20/1 | 2 | – | – | – | | | | SPARE |
| STORAGE SO. | | 720 | | – | – | – | 3 | 20/1 | 20/1 | 4 | – | – | – | | 720 | | STORAGE #9 |
| STORAGE SO. | | | 720 | – | – | – | 5 | 20/1 | 20/1 | 6 | – | – | – | | | 720 | STORAGE SO |
| SPARE | 0 | | | – | – | – | 7 | 20/1 | 20/1 | 8 | – | – | – | 720 | | | STORAGE #7 |
| SPACE | | – | | – | – | – | 9 | – | – | 10 | – | – | – | | – | | SPACE |
| SUB F. RECP | | | 360 | – | 2 | – | 11 | 20/1 | 20/1 | 12 | – | – | – | | | 0 | SPARE |
| STORAGE #1 | 720 | | | – | – | – | 13 | 20/1 | 100/ | 14 | – | – | – | | | | MAIN UPS |
| OLD UPS S.E | | 720 | | – | – | / | 15 | 20/ | / | 16 | – | – | – | | – | | W/OCT#14 |
| W/CIR. #15 | | | 720 | – | – | / | 17 | /2 | 3 | 18 | – | – | – | | | – | W/OCT#14 |
| STORAGE #4 | 720 | | | – | – | – | 19 | 20/1 | 20/1 | 20 | – | – | – | 720 | | | RECP #3 |
| SUB F. TAKER | | 720 | | – | 4 | – | 21 | 20/1 | 20/1 | 22 | – | 2 | – | | 360 | | SUB F. FIRE |
| SPARE | | | 0 | – | – | – | 23 | 100/1 | 50/ | 24 | – | 1 | – | | | – | ARC-TIGHT |
| – | – | | | – | – | – | 25 | – | / | 26 | – | – | – | – | | | W/OCT#14 |
| – | | – | | – | – | – | 27 | – | 3 | 28 | – | – | – | | – | | W/OCT#14 |
| SPACE | | | – | – | – | – | 29 | – | – | 30 | – | – | – | | | – | SPACE |
| SPACE | – | | | – | – | – | 31 | – | – | 32 | – | – | – | – | | | SPACE |
| – | | – | | – | – | – | 33 | – | – | 34 | – | | | | – | | – |
| – | | | – | – | – | – | 35 | – | – | 36 | – | – | – | | | – | – |
| – | – | | | – | – | – | 37 | – | – | 38 | – | – | – | – | | | – |
| – | | – | | – | – | – | 39 | – | – | 40 | – | | | | – | | – |
| – | | | – | – | – | – | 41 | – | – | 42 | – | – | – | | | – | – |

ϕA: 3600 VA | ϕB: 3240 VA | ϕC: 2520 VA

TOTAL CONNECTED LOAD: 9360 VA OR 26.0 AMPS @ 208 VOLTS – 3 ø

LCL: 0 VA x 125% = 0 VA

FDL: 9360 VA OR 26.0 AMPS

## PANEL UPS-AA

208Y/120 VOLTS | 3 PHASE | 4 WIRE | MAIN BKR: 175A_3P | LOCATION: BASEMENT ELEC. ROOM | 225A A. BUSSING | FEEDER | ENTER CAB'T. AT: VERIFY | SURFACE MTG.

| LOCATION | VOLT AMPS ϕA | ϕB | ϕC | LTG or - | REC | MIS | CIR | BKR | BKR | CIR | MIS | REC | LTG or LCL | VOLT AMPS ϕA | ϕB | ϕC | LOCATION |
|---|---|---|---|---|---|---|---|---|---|---|---|---|---|---|---|---|---|
| TEL. R. EAST | 360 | | | – | 6 | – | 1 | 20/1 | 20/1 | 2 | – | – | – | 360 | | | PD FLOOR |
| TEL. R. EAST | | 720 | | – | 4 | – | 3 | 20/1 | 20/1 | 4 | 1 | – | – | | 720 | | PD POS3 |
| TEL. R. TRAY | | | 360 | – | 5 | – | 5 | 20/1 | 20/1 | 6 | 1 | – | – | | | 720 | PD POS3 |
| TEL. R. TRAY | 360 | | | – | 1 | – | 7 | 20/1 | 20/1 | 8 | 1 | – | – | 720 | | | PD CALL 1/2 |
| TEL. R. TRAY | | 360 | | – | 1 | – | 9 | 20/1 | 20/1 | 10 | 1 | – | – | | 720 | | PD CALL 1/2 |
| TEL. R. TRAY | | | 360 | – | 1 | – | 11 | 20/1 | 20/1 | 12 | 1 | – | – | | | 720 | FIRE POS 1/2 |
| TEL. R. TRAY | 360 | | | – | 1 | – | 13 | 20/1 | 20/1 | 14 | – | – | – | 0 | | | SPARE |
| TEL. R. TRAY | | 360 | | – | 1 | – | 15 | 20/1 | 20/1 | 16 | – | – | – | | 0 | | SPARE |
| TEL. R. TRAY | | | 360 | – | 1 | – | 17 | 20/1 | 20/1 | 18 | – | – | – | | | 0 | SPARE |
| SPARE | 0 | | | – | – | – | 19 | – | – | 20 | – | – | – | – | | | SPACE |
| SPARE | | 0 | | – | – | – | 21 | 20/1 | – | 22 | – | – | – | | – | | SPACE |
| SPACE | | | 0 | – | – | – | 23 | 20/1 | – | 24 | – | – | – | | | – | SPACE |
| SPACE | – | | | – | – | – | 25 | – | – | 26 | – | – | – | | | – | SPACE |
| SPACE | | – | | – | – | – | 27 | – | – | 28 | – | – | – | | – | | SPACE |
| SPACE | | | – | – | – | – | 29 | – | – | 30 | – | – | – | | | – | SPACE |
| SPACE | – | | | – | – | – | 31 | – | – | 32 | – | – | – | – | | | SPACE |
| SPACE | | – | | – | – | – | 33 | – | – | 34 | – | | | | – | | SPACE |
| SPACE | | | – | – | – | – | 35 | – | – | 36 | – | – | – | | | – | SPACE |
| SPACE | – | | | – | – | – | 37 | – | – | 38 | – | – | – | – | | | SPACE |
| SPACE | | – | | – | – | – | 39 | – | – | 40 | – | | | | – | | SPACE |
| SPACE | | | – | – | – | – | 41 | – | – | 42 | – | – | – | | | – | SPACE |

ϕA: 2880 VA | ϕB: 3600 VA | ϕC: 3240 VA

TOTAL CONNECTED LOAD: 9720 VA OR 27.0 AMPS @ 208 VOLTS – 3 ø

LCL: 0 VA x 125% = 0 VA

FDL: 9720 VA OR 27.0 AMPS

## PANEL UPS-AB

208Y/120 VOLTS | 3 PHASE | 4 WIRE | MAIN BKR: 100A_3P | LOCATION: SECOND FLOOR SERVER ROOM | 100A A. BUSSING | FEEDER | ENTER CAB'T. AT: VERIFY | SURFACE MTG.

| LOCATION | VOLT AMPS ϕA | ϕB | ϕC | LTG or - | REC | MIS | CIR | BKR | BKR | CIR | MIS | REC | LTG or LCL | VOLT AMPS ϕA | ϕB | ϕC | LOCATION |
|---|---|---|---|---|---|---|---|---|---|---|---|---|---|---|---|---|---|
| SPACE | | | | – | – | – | 1 | – | 20/1 | 2 | – | 2 | – | 360 | | | RM 2237 |
| SPACE | | – | | – | – | – | 3 | – | 30/ | 4 | – | 1 | – | | 360 | | RM 2237 |
| SPACE | | | – | – | – | – | 5 | – | / | 6 | – | – | – | | | 360 | RM 2237 |
| SPACE | – | | | – | – | – | 7 | – | 20/1 | 8 | – | 2 | – | 360 | | | RM 2237 |
| SPACE | | – | | – | – | – | 9 | – | 20/1 | 10 | – | 2 | – | | 360 | | RM 2237 |
| SPACE | | | – | – | – | – | 11 | – | 20/1 | 12 | – | 2 | – | | | 360 | RM 2237 |
| SPACE | – | | | – | – | – | 13 | – | – | 14 | – | – | – | | | | SPACE |
| SPACE | | – | | – | – | – | 15 | – | – | 16 | – | – | – | | – | | SPACE |
| SPACE | | | – | – | – | – | 17 | – | – | 18 | – | – | – | | | – | SPACE |
| SPACE | – | | | – | – | – | 19 | – | – | 20 | – | – | – | – | | | SPACE |
| SPACE | | – | | – | – | – | 21 | – | – | 22 | – | – | – | | – | | SPACE |
| SPACE | | | – | – | – | – | 23 | – | – | 24 | – | – | – | | | – | SPACE |
| SPACE | – | | | – | – | – | 25 | – | – | 26 | – | – | – | – | | | SPACE |
| SPACE | | – | | – | – | – | 27 | – | – | 28 | – | – | – | | – | | SPACE |
| SPACE | | | – | – | – | – | 29 | – | – | 30 | – | – | – | | | – | SPACE |
| SPACE | – | | | – | – | – | 31 | – | – | 32 | – | – | – | – | | | SPACE |
| SPACE | | – | | – | – | – | 33 | – | – | 34 | – | | | | – | | SPACE |
| SPACE | | | – | – | – | – | 35 | – | – | 36 | – | – | – | | | – | SPACE |
| SPACE | – | | | – | – | – | 37 | – | 100/ | 38 | – | – | – | 720 | | | UPS–AB |
| SPACE | | – | | – | – | – | 39 | – | – | 40 | – | | | | 720 | | W/CIR. #38 |
| SPACE | | | – | – | – | – | 41 | – | 3 | 42 | – | – | – | | | 720 | W/CIR. #38 |

ϕA: 720 VA | ϕB: 720 VA | ϕC: 720 VA

TOTAL CONNECTED LOAD: 2160 VA OR 6.0 AMPS @ 208 VOLTS – 3 ø

LCL: 0 VA x 125% = 0 VA

FDL: 2160 VA OR 6.0 AMPS

## PANEL UPS-B

208Y/120 VOLTS | 3 PHASE | 4 WIRE | MAIN BKR: 150A_3P | LOCATION: ELECTRICAL ROOM SECOND FLOOR | 225A A. BUSSING | FEEDER | ENTER CAB'T. AT: VERIFY | SURFACE MTG.

| LOCATION | VOLT AMPS ϕA | ϕB | ϕC | LTG or - | REC | MIS | CIR | BKR | BKR | CIR | MIS | REC | LTG or LCL | VOLT AMPS ϕA | ϕB | ϕC | LOCATION |
|---|---|---|---|---|---|---|---|---|---|---|---|---|---|---|---|---|---|
| SUB F. RECP | 720 | | | – | 4 | – | 1 | 20/1 | 20/1 | 2 | – | 6 | – | 1080 | | | TAKER 3 & 4 |
| CUBICLE SQT | | 720 | | – | 4 | – | 3 | 20/1 | 20/1 | 4 | – | 3 | – | | 540 | | TAKER 2 |
| CUBICLE AUX | | | 1620 | – | 9 | – | 5 | 20/1 | 20/1 | 6 | – | 7 | – | | | 1260 | TAKER 3 & 4 P. |
| CUB. POPOS1 | 540 | | | – | 3 | – | 7 | 20/1 | 20/1 | 8 | – | 10 | – | 1800 | | | TAKER 1 & 2 P. |
| CUB. POS 1-3 | | 1060 | | – | 6 | – | 9 | 20/1 | 20/1 | 10 | – | 3 | – | | 540 | | POPOS 2 |
| CUB. POS 3 | | | 1260 | – | 7 | – | 11 | 20/1 | 20/1 | 12 | – | 4 | – | | | 720 | WALL R. SW |
| T. RM. CABLE | 0 | | | – | – | – | 13 | 20/1 | 20/1 | 14 | – | – | – | 0 | | | TEL. R. TRAY |
| T. RM. CABLE | | 0 | | – | – | – | 15 | 20/1 | 20/1 | 16 | – | – | – | | 0 | | TEL. R. TRAY |
| T. RM. CABLE | | | 0 | – | – | – | 17 | 20/1 | 20/1 | 18 | – | – | – | | | 0 | TEL. R. TRAY |
| T. RM. CABLE | 0 | | | – | – | – | 19 | 20/1 | 20/1 | 20 | – | – | – | 0 | | | TEL. R. TRAY |
| T. RM. MIDDLE | | 0 | | – | – | – | 21 | 20/1 | 20/1 | 22 | – | – | – | | 0 | | TEL. R. TRAY |
| T. RM. EAST | | | 720 | – | – | – | 23 | 20/1 | 20/1 | 24 | – | – | – | | | 1080 | CIRCUIT 24A |
| RACK 7, 8, 9 | 720 | | | – | – | – | 25 | 20/1 | 20/1 | 26 | – | – | – | 1080 | | | CIRCUIT 26A |
| RACK 1 | | 720 | | – | – | – | 27 | 20/1 | 20/1 | 28 | – | – | – | | 720 | | RACK 3 |
| RACK 6 | | | 720 | – | – | – | 29 | 20/1 | 20/1 | 30 | – | – | – | | | 720 | RACK 2 |
| | – | | | | – | – | 31 | – | – | 32 | – | – | – | – | | | |
| | | – | | – | – | – | 33 | – | – | 34 | – | | | | – | | |
| | | | – | – | – | – | 35 | – | – | 36 | – | – | – | | | – | |
| | – | | | – | – | – | 37 | – | – | 38 | – | – | – | – | | | |
| | | – | | – | – | – | 39 | – | – | 40 | – | | | | – | | |
| | | | – | – | – | – | 41 | – | – | 42 | – | – | – | | | – | |

ϕA: 5940 VA | ϕB: 4300 VA | ϕC: 8100 VA

TOTAL CONNECTED LOAD: 18340 VA OR 50.9 AMPS @ 208 VOLTS – 3 ø

LCL: 0 VA x 125% = 0 VA

FDL: 18340 VA OR 50.9 AMPS

## PANEL UPS-BA

208Y/120 VOLTS | 3 PHASE | 4 WIRE | MAIN BKR: 350A_3P | LOCATION: SECOND FLOOR ELECTRICAL ROOM | 400A A. BUSSING | FEEDER | ENTER CAB'T. AT: VERIFY | SURFACE MTG.

| LOCATION | VOLT AMPS ϕA | ϕB | ϕC | LTG or - | REC | MIS | CIR | BKR | BKR | CIR | MIS | REC | LTG or LCL | VOLT AMPS ϕA | ϕB | ϕC | LOCATION |
|---|---|---|---|---|---|---|---|---|---|---|---|---|---|---|---|---|---|
| STORAGE SO. | 720 | | | – | 2 | – | 1 | 20/1 | 20/1 | 2 | – | – | – | 0 | | | SPARE |
| STORAGE #1 | | 720 | | – | 2 | – | 3 | 20/1 | 20/1 | 4 | – | – | – | | 0 | | SPARE |
| RADIO | | | 540 | – | 2 | – | 5 | 20/1 | 20/1 | 6 | – | 2 | – | | | 0 | SPARE |
| SPARE | 0 | | | – | – | – | 7 | 20/1 | – | 8 | – | – | – | – | | | SPACE |
| SPARE | | 0 | | – | – | – | 9 | 20/1 | – | 10 | – | – | – | | – | | SPACE |
| SPARE | | | 0 | – | – | – | 11 | 20/1 | – | 12 | – | – | – | | | – | SPACE |
| SPACE | – | | | – | – | – | 13 | – | – | 14 | – | – | – | – | | | SPACE |
| SPACE | | – | | – | – | – | 15 | – | – | 16 | – | – | – | | – | | SPACE |
| SPACE | | | – | – | – | – | 17 | – | – | 18 | – | – | – | | | – | SPACE |
| SPACE | – | | | – | – | – | 19 | – | – | 20 | – | – | – | – | | | SPACE |
| SPACE | | – | | – | – | – | 21 | – | – | 22 | – | – | – | | – | | SPACE |
| SPACE | | | – | – | – | – | 23 | – | – | 24 | – | – | – | | | – | SPACE |
| SPACE | – | | | – | – | – | 25 | – | – | 26 | – | – | – | – | | | SPACE |
| SPACE | | – | | – | – | – | 27 | – | – | 28 | – | – | – | | – | | SPACE |
| SPACE | | | – | – | – | – | 29 | – | – | 30 | – | – | – | | | – | SPACE |
| SPACE | – | | | – | – | – | 31 | – | – | 32 | – | – | – | – | | | SPACE |
| SPACE | | – | | – | – | – | 33 | – | – | 34 | – | | | | – | | SPACE |
| SPACE | | | – | – | – | – | 35 | – | – | 36 | – | – | – | | | – | SPACE |
| SPACE | – | | | – | – | – | 37 | – | – | 38 | – | – | – | – | | | SPACE |
| SPACE | | – | | – | – | – | 39 | – | – | 40 | – | | | | – | | SPACE |
| SPACE | | | – | – | – | – | 41 | – | – | 42 | – | – | – | | | – | SPACE |

ϕA: 1260 VA | ϕB: 1440 VA | ϕC: 1260 VA

TOTAL CONNECTED LOAD: 3960 VA OR 11.0 AMPS @ 208 VOLTS – 3 ø

LCL: 0 VA x 125% = 0 VA

FDL: 3960 VA OR 11.0 AMPS

## PANEL UPS-BB

208Y/120 VOLTS | 3 PHASE | 4 WIRE | MAIN BKR: 100A_3P | LOCATION: SECOND FLOOR ROOM 2237 | 100A A. BUSSING | FEEDER | ENTER CAB'T. AT: VERIFY | SURFACE MTG.

| LOCATION | VOLT AMPS ϕA | ϕB | ϕC | LTG or - | REC | MIS | CIR | BKR | BKR | CIR | MIS | REC | LTG or LCL | VOLT AMPS ϕA | ϕB | ϕC | LOCATION |
|---|---|---|---|---|---|---|---|---|---|---|---|---|---|---|---|---|---|
| SPACE | – | | | – | – | – | 1 | – | 20/1 | 2 | – | 1 | – | 180 | | | RM 2237 |
| SPACE | | – | | – | – | – | 3 | – | 20/1 | 4 | – | 2 | – | | 360 | | RM 2237 |
| SPACE | | | – | – | – | – | 5 | – | 20/1 | 6 | – | 2 | – | | | 360 | RM 2237 |
| SPACE | – | | | – | – | – | 7 | – | 20/1 | 8 | – | 2 | – | 360 | | | RM 2237 |
| SPACE | | – | | – | – | – | 9 | – | 30/ | 10 | – | / | – | | 360 | | RM 2237 |
| SPACE | | | – | – | – | – | 11 | – | / | 12 | – | / | – | | | 360 | W/CIR. #10 |
| SPACE | – | | | – | – | – | 13 | – | – | 14 | – | – | – | – | | | SPACE |
| SPACE | | – | | – | – | – | 15 | – | – | 16 | – | – | – | | – | | SPACE |
| SPACE | | | – | – | – | – | 17 | – | – | 18 | – | – | – | | | – | SPACE |
| SPACE | – | | | – | – | – | 19 | – | – | 20 | – | – | – | – | | | SPACE |
| SPACE | | – | | – | – | – | 21 | – | – | 22 | – | – | – | | – | | SPACE |
| SPACE | | | – | – | – | – | 23 | – | – | 24 | – | – | – | | | – | SPACE |
| SPACE | – | | | – | – | – | 25 | – | – | 26 | – | – | – | – | | | SPACE |
| SPACE | | – | | – | – | – | 27 | – | – | 28 | – | – | – | | – | | SPACE |
| SPACE | | | – | – | – | – | 29 | – | – | 30 | – | – | – | | | – | SPACE |
| SPACE | – | | | – | – | – | 31 | – | – | 32 | – | – | – | – | | | SPACE |
| SPACE | | – | | – | – | – | 33 | – | – | 34 | – | | | | – | | SPACE |
| SPACE | | | – | – | – | – | 35 | – | – | 36 | – | – | – | | | – | SPACE |
| SPACE | – | | | – | – | – | 37 | – | 100/ | 38 | – | – | – | 540 | | | UPS–BB PANELBOARD |
| SPACE | | – | | – | – | – | 39 | – | – | 40 | – | | | | 720 | | W/ CKT#38 |
| SPACE | | | – | – | – | – | 41 | – | 3 | 42 | – | – | – | | | 720 | W/ CKT#38 |

ϕA: 720 VA | ϕB: 720 VA | ϕC: 720 VA

TOTAL CONNECTED LOAD: 1980 VA OR 5.5 AMPS @ 208 VOLTS – 3 ø

LCL: 0 VA x 125% = 0 VA

FDL: 1980 VA OR 5.5 AMPS

## REFERENCE NOTES

1. CIRCUITS TO RECONNECT INTO PDU–1 PANEL A.
2. CIRCUITS TO RECONNECT FROM PANEL UPS–A.

## PDU–1 PANEL A

208Y/120 VOLTS | 3 PHASE | 4 WIRE | MAIN BKR: 225A_3P | LOCATION: SECOND FLOOR ELECTRICAL ROOM | 225A A. BUSSING | FEEDER | ENTER CAB'T. AT: VERIFY | SURFACE MTG.

| LOCATION | VOLT AMPS ϕA | ϕB | ϕC | LTG or - | REC | MIS | CIR | BKR | BKR | CIR | MIS | REC | LTG or LCL | VOLT AMPS ϕA | ϕB | ϕC | LOCATION |
|---|---|---|---|---|---|---|---|---|---|---|---|---|---|---|---|---|---|
| SPACE | – | | | – | – | – | 1 | – | 100/ | 2 | – | – | – | – | | | UPS A PANELBOARD |
| SPACE | | – | | – | – | – | 3 | – | / | 4 | – | – | – | | | – | W/ CKT#2 |
| SPACE | | | – | – | – | – | 5 | – | 3 | 6 | – | – | – | | – | | W/ CKT#2 |
| SPACE | – | | | – | – | – | 7 | – | 20/1 | 8 | – | 2 | – | 360 | | | SUB F. RECP |
| SPACE | | – | | – | – | – | 9 | – | 20/1 | 10 | – | 4 | – | | 720 | | SUB F. TAKER |
| SPACE | | | – | – | – | – | 11 | – | 20/1 | 12 | – | 2 | – | | | 360 | SUB F. FIRE |
| SPACE | – | | | – | – | – | 13 | – | – | 14 | – | – | – | | | | SPACE |
| SPACE | | – | | – | – | – | 15 | – | – | 16 | – | – | – | | – | | SPACE |
| SPACE | | | – | – | – | – | 17 | – | – | 18 | – | – | – | | | – | SPACE |
| SPACE | – | | | – | – | – | 19 | – | – | 20 | – | – | – | | | | SPACE |
| SPACE | | – | | – | – | – | 21 | – | – | 22 | – | – | – | | – | | SPACE |
| SPACE | | | – | – | – | – | 23 | – | – | 24 | – | – | – | | | – | SPACE |
| SPACE | – | | | – | – | – | 25 | – | – | 26 | – | – | – | | | | SPACE |
| SPACE | | – | | – | – | – | 27 | – | – | 28 | – | – | – | | – | | SPACE |
| SPACE | | | – | – | – | – | 29 | – | – | 30 | – | – | – | | | – | SPACE |
| SPACE | – | | | – | – | – | 31 | – | – | 32 | – | – | – | | | | SPACE |
| SPACE | | – | | – | – | – | 33 | – | – | 34 | – | | | | – | | SPACE |
| SPACE | | | – | – | – | – | 35 | – | – | 36 | – | – | – | | | – | SPACE |
| SPACE | – | | | – | – | – | 37 | – | – | 38 | – | – | – | | | | SPACE |
| SPACE | | – | | – | – | – | 39 | – | – | 40 | – | | | | – | | SPACE |
| SPACE | | | – | – | – | – | 41 | – | – | 42 | – | – | – | | | – | SPACE |

ϕA: 9360 VA | ϕB: 0 VA | ϕC: 0 VA

TOTAL CONNECTED LOAD: 9360 VA OR 26.0 AMPS @ 208 VOLTS – 3 ø

LCL: 0 VA x 125% = 0 VA

FDL: 9360 VA OR 26.0 AMPS

## PDU–2 PANEL B

208Y/120 VOLTS | 3 PHASE | 4 WIRE | MAIN BKR: 225A_3P | LOCATION: SECOND FLOOR ELECTRICAL ROOM | 225A A. BUSSING | FEEDER | ENTER CAB'T. AT: VERIFY | SURFACE MTG.

| LOCATION | VOLT AMPS ϕA | ϕB | ϕC | LTG or - | REC | MIS | CIR | BKR | BKR | CIR | MIS | REC | LTG or LCL | VOLT AMPS ϕA | ϕB | ϕC | LOCATION |
|---|---|---|---|---|---|---|---|---|---|---|---|---|---|---|---|---|---|
| SPACE | – | | | – | – | – | 1 | – | 100/ | 2 | – | – | – | – | | | UPS B PANELBOARD |
| SPACE | | – | | – | – | – | 3 | – | / | 4 | – | – | – | | | – | W/ CKT#2 |
| SPACE | | | – | – | – | – | 5 | – | 3 | 6 | – | – | – | | – | | W/ CKT#2 |
| SPACE | – | | | – | – | – | 7 | – | – | 8 | – | – | – | – | | | SPACE |
| SPACE | | – | | – | – | – | 9 | – | – | 10 | – | – | – | | – | | SPACE |
| SPACE | | | – | – | – | – | 11 | – | – | 12 | – | – | – | | | – | SPACE |
| SPACE | – | | | – | – | – | 13 | – | – | 14 | – | – | – | – | | | SPACE |
| SPACE | | – | | – | – | – | 15 | – | – | 16 | – | – | – | | – | | SPACE |
| SPACE | | | – | – | – | – | 17 | – | – | 18 | – | – | – | | | – | SPACE |
| SPACE | – | | | – | – | – | 19 | – | – | 20 | – | – | – | – | | | SPACE |
| SPACE | | – | | – | – | – | 21 | – | – | 22 | – | – | – | | – | | SPACE |
| TEMPORARY 911 IN E.O/C FEB 2013 | | | 0 | – | – | – | 23 | 20/1 | – | 24 | – | – | – | | | – | SPACE |
| TEMPORARY 911 IN E.O/C FEB 2013 | 0 | | | – | – | – | 25 | 20/1 | – | 26 | – | – | – | | – | | SPACE |
| TEMPORARY 911 IN E.O/C FEB 2013 | | 0 | | – | – | – | 27 | 20/1 | – | 28 | – | – | – | | | – | SPACE |
| TEMPORARY 911 IN E.O/C FEB 2013 | | | 0 | – | – | – | 29 | 20/1 | – | 30 | – | – | – | | – | | SPACE |
| TEMPORARY 911 IN E.O/C FEB 2013 | 0 | | | – | – | – | 31 | 20/1 | – | 32 | – | – | – | | | – | SPACE |
| TEMPORARY 911 IN E.O/C FEB 2013 | | 0 | | – | – | – | 33 | 20/1 | – | 34 | – | – | – | | – | | SPACE |
| TEMPORARY 911 IN E.O/C FEB 2013 | | | 0 | – | – | – | 35 | 20/1 | – | 36 | – | – | – | | | – | SPACE |
| TEMPORARY 911 IN E.O/C FEB 2013 | 0 | | | – | – | – | 37 | 20/1 | – | 38 | – | – | – | | – | | SPACE |
| TEMPORARY 911 IN E.O/C FEB 2013 | | 0 | | – | – | – | 39 | 20/1 | – | 40 | – | – | – | | | – | SPACE |
| TEMPORARY 911 IN E.O/C FEB 2013 | | | 0 | – | – | – | 41 | 20/1 | – | 42 | – | – | – | | | – | SPACE |

ϕA: 18340 VA | ϕB: 0 VA | ϕC: 0 VA

TOTAL CONNECTED LOAD: 18340 VA OR 50.9 AMPS @ 208 VOLTS – 3 ø

LCL: 0 VA x 125% = 0 VA

FDL: 18340 VA OR 50.9 AMPS

## PDU–3 PANEL C

208Y/120 VOLTS | 3 PHASE | 4 WIRE | MAIN BKR: 225A_3P | LOCATION: SECOND FLOOR ELECTRICAL ROOM | 225A A. BUSSING | FEEDER | ENTER CAB'T. AT: VERIFY | SURFACE MTG.

| LOCATION | VOLT AMPS ϕA | ϕB | ϕC | LTG or - | REC | MIS | CIR | BKR | BKR | CIR | MIS | REC | LTG or LCL | VOLT AMPS ϕA | ϕB | ϕC | LOCATION |
|---|---|---|---|---|---|---|---|---|---|---|---|---|---|---|---|---|---|
| SPARE | 0 | | | – | – | – | 1 | 20/1 | 20/1 | 2 | – | – | – | 0 | | | SPARE |
| SPARE | | 0 | | – | – | – | 3 | 20/1 | 20/1 | 4 | – | – | – | | 0 | | SPARE |
| SPARE | | | 0 | – | – | – | 5 | 20/1 | 20/1 | 6 | – | – | – | | | 0 | SPARE |
| SPARE | 0 | | | – | – | – | 7 | 20/1 | 20/1 | 8 | – | – | – | 0 | | | SPARE |
| SPARE | | 0 | | – | – | – | 9 | 20/1 | 20/1 | 10 | – | – | – | | 0 | | SPARE |
| SPARE | | | 0 | – | – | – | 11 | 20/1 | 20/1 | 12 | – | – | – | | | 0 | SPARE |
| SPARE | 0 | | | – | – | – | 13 | 20/1 | 20/1 | 14 | – | – | – | 0 | | | SPARE |
| SPARE | | 0 | | – | – | – | 15 | 20/1 | 20/1 | 16 | – | – | – | | 0 | | SPARE |
| SPARE | | | 0 | – | – | – | 17 | 20/1 | 20/1 | 18 | – | – | – | | | 0 | SPARE |
| SPARE | 0 | | | – | – | – | 19 | 20/1 | 20/1 | 20 | – | – | – | 0 | | | SPARE |
| SPARE | | 0 | | – | – | – | 21 | 20/1 | 20/1 | 22 | – | – | – | | 0 | | SPARE |
| SPARE | | | 0 | – | – | – | 23 | 20/1 | 20/1 | 24 | – | – | – | | | 0 | TEMPORARY 911 IN E.O/C FEB 2013 |
| SPARE | 0 | | | – | – | – | 25 | 20/1 | 20/1 | 26 | – | – | – | 0 | | | TEMPORARY 911 IN E.O/C FEB 2013 |
| SPARE | | 0 | | – | – | – | 27 | 20/1 | 20/1 | 28 | – | – | – | | 0 | | TEMPORARY 911 IN E.O/C FEB 2013 |
| SPARE | | | 0 | – | – | – | 29 | 20/1 | 20/1 | 30 | – | – | – | | | 0 | TEMPORARY 911 IN E.O/C FEB 2013 |
| SPARE | 0 | | | – | – | – | 31 | 20/1 | 20/1 | 32 | – | – | – | 0 | | | TEMPORARY 911 IN E.O/C FEB 2013 |
| SPACE | | – | | – | – | – | 33 | – | 20/1 | 34 | – | – | – | | 0 | | TEMPORARY 911 IN E.O/C FEB 2013 |
| SPACE | | | – | – | – | – | 35 | – | 20/1 | 36 | – | – | – | | | 0 | TEMPORARY 911 IN E.O/C FEB 2013 |
| SPACE | 0 | | | – | – | – | 37 | 20/1 | 20/1 | 38 | – | – | – | 0 | | | TEMPORARY 911 IN E.O/C FEB 2013 |
| SPACE | | – | | – | – | – | 39 | – | 20/1 | 40 | – | – | – | | 0 | | TEMPORARY 911 IN E.O/C FEB 2013 |
| SPACE | | | – | – | – | – | 41 | – | – | 42 | – | – | – | | | – | SPACE |

ϕA: 0 VA | ϕB: 0 VA | ϕC: 0 VA

TOTAL CONNECTED LOAD: 0 VA OR 0.0 AMPS @ 208 VOLTS – 3 ø

LCL: 0 VA x 125% = 0 VA

FDL: 0 VA OR 0.0 AMPS

## PDU–4 PANEL D

208Y/120 VOLTS | 3 PHASE | 4 WIRE | MAIN BKR: 225A_3P | LOCATION: SECOND FLOOR ELECTRICAL ROOM | 225A A. BUSSING | FEEDER | ENTER CAB'T. AT: VERIFY | SURFACE MTG.

| LOCATION | VOLT AMPS ϕA | ϕB | ϕC | LTG or - | REC | MIS | CIR | BKR | BKR | CIR | MIS | REC | LTG or LCL | VOLT AMPS ϕA | ϕB | ϕC | LOCATION |
|---|---|---|---|---|---|---|---|---|---|---|---|---|---|---|---|---|---|
| RACK 1 | 0 | | | – | – | – | 1 | 20/1 | 20/1 | 2 | – | – | – | 0 | | | SPARE |
| RACK 2 | | 0 | | – | – | – | 3 | 20/1 | 20/1 | 4 | – | – | – | | 0 | | SPARE |
| RACK 2 | | | 0 | – | – | – | 5 | 20/1 | 20/1 | 6 | – | – | – | | | 0 | SPARE |
| RACK 3 | 0 | | | – | – | – | 7 | 20/1 | 20/1 | 8 | – | – | – | 0 | | | SPARE |
| RACK 3 | | 0 | | – | – | – | 9 | 20/1 | 30/ | 10 | – | – | – | | 0 | | SPARE |
| RACK 4 | | | 0 | – | – | – | 11 | 20/1 | / | 12 | – | – | – | | | 0 | SPARE |
| RACK 5 | 0 | | | – | – | – | 13 | 20/1 | – | 14 | – | – | – | – | | | SPACE |
| RACK 6 | | 0 | | – | – | – | 15 | 20/1 | – | 16 | – | – | – | | – | | SPACE |
| RACK 7 | | | 0 | – | – | – | 17 | 20/1 | – | 18 | – | – | – | | | – | SPACE |
| RACK 8 | 0 | | | – | – | – | 19 | 20/1 | – | 20 | – | – | – | – | | | SPACE |
| RACK 9 | | 0 | | – | – | – | 21 | 20/1 | – | 22 | – | – | – | | – | | SPACE |
| RACK 9 | | | 0 | – | – | – | 23 | 20/1 | – | 24 | – | – | – | | | – | SPACE |
| SPACE | – | | | – | – | – | 25 | – | – | 26 | – | – | – | – | | | SPACE |
| SPACE | | – | | – | – | – | 27 | – | – | 28 | – | – | – | | – | | SPACE |
| SPACE | | | – | – | – | – | 29 | – | – | 30 | – | – | – | | | – | SPACE |
| SPACE | – | | | – | – | – | 31 | – | – | 32 | – | – | – | – | | | SPACE |
| SPACE | | – | | – | – | – | 33 | – | – | 34 | – | | | | – | | SPACE |
| SPACE | | | – | – | – | – | 35 | – | – | 36 | – | – | – | | | – | SPACE |
| SPACE | – | | | – | – | – | 37 | – | – | 38 | – | – | – | – | | | SPACE |
| SPACE | | – | | – | – | – | 39 | – | – | 40 | – | | | | – | | SPACE |
| SPACE | | | – | – | – | – | 41 | – | – | 42 | – | – | – | | | – | SPACE |

ϕA: 0 VA | ϕB: 0 VA | ϕC: 0 VA

TOTAL CONNECTED LOAD: 0 VA OR 0.0 AMPS @ 208 VOLTS – 3 ø

LCL: 0 VA x 125% = 0 VA

FDL: 0 VA OR 0.0 AMPS

| REV. | DESCRIPTION | DATE | BY |
|---|---|---|---|
| | PLAN CHECK | 06/15/16 | |
| | PROGRESS ISSUE | 06/1/16 | |

REGISTERED PROFESSIONAL ENGINEER — DESMOND MADYUN — No. E020642 — Exp. 03-31-18 — ELECTRICAL — STATE OF CALIFORNIA


1983 WEST 190TH STREET, SUITE 200
TORRANCE, CA 90504
TEL: (310) 464-8404
FAX: (310) 464-8408
WWW.BREENENG.COM
BREEN Engineering Inc


# ELECTRICAL PANEL SCHEDULES

# TORRANCE POLICE DEPARTMENT UPS REPLACEMENT PROJECT

3300 CIVIC CENTER DR., TORRANCE, CA 90505

| | |
|---|---|
| DATE: | MAY 2016 |
| SCALE: | NONE |
| PROJECT NUMBER: | 307–16–001 |
| DRAWN BY: | SG,KD |
| CHECKED BY: | DM |
| DRAWING NUMBER | E-4.6 |



DWF/PDF Created On: Jun 29, 2016 - 8:31am Plotted By: sgulle_breene Filename: H:\Projects\307 City of Torrance\16-001 - TORRANCE POLICE DEPARTMENT – REPLACEMENT\01 - CAD\Electrical\E-4.6 ELECTRICAL PANEL SCHEDULES.dwg
PLOTTED PAPER SIZE (DRAWING HAS BEEN SCALED IF DIFFERENT) ARCH FULL BLEED E1 (30.00 X 42.00 INCHES) PLOT SCALE: 1:1 PLOT STYLE: PDF & DWF.STB

COPYRIGHT ©2016 BREEN ENGINEERING, INC.