MADRONA MARSH
NATURE CENTER IMPROVEMENTS

VICINITY MAP

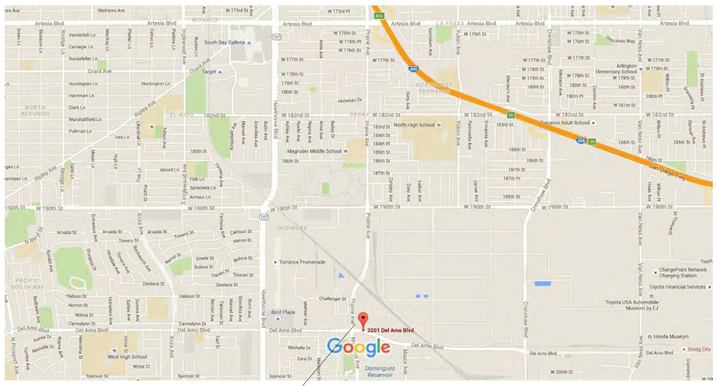

PROJECT LOCATION
3201 PLAZA DEL AMO BLVD.
TORRANCE, CA 90503

PROJECT DATA

PROJECT ADDRESS
MADRONA MARSH NATURE CENTER
3201 PLAZA DEL AMO BOULEVARD
TORRANCE, CA 90503

EXISTING BUILDING DESCRIPTION
1-STORY OFFICE BUILDING
FULLY SPRINKLERED

BUILDING OCCUPANCY
"B" OCCUPANCY

PROJECT SCOPE
TENANT IMPROVEMENT WORK: MINOR DEMOLITION WORK AND INSTALLATION OF NEW WINDOWS AT SOUTH WALL OF EXISTING CLASSROOM. DEMOLITION OF EXISTING CONCRETE SLAB AND DRAIN AT EXISTING COURTYARD. INSTALLATION OF NEW CONCRETE SLAB AND DRAIN AT EXISTING COURTYARD. CONSTRUCTION OF A NEW GLASS CANOPY AT COURTYARD WITH BOTH PHOTOVOLTAIC GLASS AND SKYLIGHT GLASS INCLUDING STEEL STRUCTURE AND FOUNDATION AND ELECTRICAL. INSTALLATION OF GUTTERS AT EXISTING COURTYARD ROOF. CONSTRUCTION OF A CHAIN LINK FENCE ENCLOSURE FOR THE OBSERVATION AREA BY THE MARSH

PROPOSED WORK
EXISTING CLASSROOM AREA = 1,131 SF
EXISTING COURTYARD = 693 SF
OBSERVATION AREA BY MARSH = 720 SF

APPLICABLE CODES

ALL WORK SHALL BE DONE IN ACCORDANCE WITH THE 2013 BUILDING CODE INCLUDING ANY AMENDMENT. ALL WORK AND MATERIALS SHALL BE IN FULL ACCORDANCE WITH THE PREVAILING CODES AND APPLICABLE LOCAL ORDINANCES. WHERE CONTRACT DOCUMENTS EXCEED THESE REQUIREMENTS WITHOUT VIOLATING CODE AND REGULATION REQUIREMENTS, CONTRACT DOCUMENT SHALL TAKE PRECEDENCE. WHERE CODES CONFLICT, THE MORE STRINGENT SHALL APPLY.

1 CITY OF TORRANCE PLAN CHECK NOTE:
STRUCTURAL OBSERVATION IS REQUIRED FOR GRADE BEAM STEEL AND PROVIDE SOILS TEST FOR BOTTOM OF FOOTING.

SHEET INDEX

ARCHITECTURAL

G001	COVER SHEET
A001	GENERAL NOTES AND ADA INFORMATION (SHEET 1)
A002	ADA INFORMATION (SHEET 2)
A100	SITE PLAN
A101	OVERALL FLOOR PLAN FOR REFERENCE ONLY
A201	OBSERVATION AREA PLAN, DETAILS & NOTES
A202	PARTIAL DEMOLITION PLAN & PROPOSED PARTIAL FLOOR/ POWER & COMMUNICATION PLAN
A203	PARTIAL REFLECTED CEILING PLAN & PARTIAL ROOF PLAN
A204	INTERIOR & EXTERIOR ELEVATIONS + BUILDING SECTIONS
AD01	DETAILS

STRUCTURAL

S001	GENERAL NOTES
S002	GENERAL NOTES
S101	TYPICAL DETAILS
S201	PARTIAL ROOF FRAMING & FOUNDATION PLAN
S202	CANOPY ROOF FRAMING & FOUNDATION PLAN
S301	WALL ELEVATION

ELECTRICAL

E001	ELECTRICAL SYMBOLS AND ABBREVIATIONS
E002	GENERAL, PV AND DEMOLITION NOTES
E003	ELECTRICAL SINGLE LINE DIAGRAM & PANEL SCHEDULES
E004	PV SYSTEM BLOCK DIAGRAM
E101	ELECTRICAL OVERALL PLAN
E202	PARTIAL POWER & COMMUNICATION DEMOLITION AND PROPOSED PLAN
E203	PARTIAL LIGHTING AND ROOF PLAN
E301	ELECTRICAL DETAILS

ABBREVIATIONS

ACT.	ACOUSTICAL TILE	EA.	EACH	MACH.	MACHINE	TEL.	TELEPHONE
ADJ.	ADJACENT	EL.	ELEVATION	MAX.	MAXIMUM	THK.	THICK(NESS)
A.F.F.	ABOVE FINISH FLOOR	E.	ELECTRICAL	MECH.	MECHANICAL	TYP.	TYPICAL
AL or ALUM	ALUMINUM	ELEV.	ELEVATOR	MTL.	METAL		
ANOD.	ANODIZED	E.C.	ELECTRIC PANEL	MFR.	MANUFACTURER		
ALUM.G.	APPROXIMATELY	E.PH.	EMERGENCY PHONE	MIN.	MINIMUM		
BD.	BOARD	EQ.	EQUAL	N.I.C.	NOT IN CONTRACT		
BLDG.	BUILDING	EQUIP.	EQUIPMENT	NO.	NUMBER		
BLK.	BLOCK	EXT.	EXTERIOR	NOM.	NOMINAL		
CAB.	CABINET	F.E.C.	FIRE EXTINGUISHER CAB.	N.T.S.	NOT TO SCALE		
CEM.	CEMENT	F.F.	FINISH FACE	O.C	ON CENTER		
CER. T.	CERAMIC TILE	F.H.C.	FIRE HOSE CABINET	OFCI	OWNER FURNISHED CONTRACTOR INSTALLED		
CT	CERAMIC TILE	FIN.	FINISH				
C.G.	CORNER GUARD	FLR.	FLOOR	O.H.	OPPOSITE HAND		
CHK'D	CHECKERED	F.O.	FACE OF...	OPNG.	OPENING		
C.J.	CONTROL JOINT	F.R.	FIRE RATED	OPP.	OPPOSITE		
CLG.	CEILING	FT.	FOOT *or* FEET	PL.	PLATE		
CLR.	CLEAR	GA.	GAUGE	PLAST.	PLASTER		
CLST.	CLOSET	GALV.	GALVANIZED	PNL.	PANEL		
COL.	COLUMN	GB	GYPSUM BOARD	RAD.	RADIUS		
CONC.	CONCRETE	G.I.	GALVANIZED IRON	REF.	REFERENCE		
COND.	CONDITION	GL.	GLASS	REINF.	REINFORCED		
CONN.	CONNECTION	GALV.STL.	GALVANIZED STEEL	REQ'D.	REQUIRED		
CONT.	CONTINUOUS	GWB	GYPSUM WALL BOARD	SCWD.A.	SOLID CORE WOOD DR.		
CONTR.	CONTRACTOR	GYP.BD.	GYPSUM BOARD	SEC.	SECTION		
DEPT.	DEPARTMENT	HDWR	HARDWARE	SHT.	SHEET		
DET.	DETAIL	H.M. *or* HM	HOLLOW METAL	REQD.	SIMILAR		
D.F.	DRINKING FOUNTAIN	HR.	HOUR	SPECS.	SPECIFICATIONS		
DIA.	DIAMETER	HT.	HEIGHT	SQ.	SQUARE		
DIM.	DIMENSION	INSUL.	INSULATION	S.S.	STAINLESS STEEL		
DN	DOWN	JST.	JOIST	STD.	STANDARD		
DR.	DOOR	JT.	JOINT	STL.	STEEL		
DW.	DRYWALL	LT.	LIGHT	STRUCT.	STRUCTURAL		
DWG.	DRAWING			SUSP.	SUSPENDED		

CONSULTANTS

ARCHITECT:
SAA ASSOCIATES
155 N. LAKE AVENUE, SUITE 800
PASADENA, CA 91101
TEL 818-437-8452
FAX 818-484-2148

STRUCTURAL ENGINEER:
VCA ENGINEERS
1041 S. GARFIELD AVENUE, SUITE 210
ALHAMBRA, CA 91801
TEL 323-729-6098
FAX 323-729-6043

MECHANICAL, ELECTRICAL & PLUMBING ENGINEERS:
TTG CORPORATION
300 N. LAKE AVENUE
14TH FLOOR, GATEWAY PLAZA
PASADENA, CA 91101
TEL
FAX

SYMBOLS

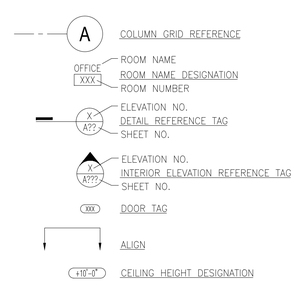

NO.	REVISIONS	DATE
1	DESIGN DEVELOPMENT PACKAGE	2/17/16
2	CONSTRUCTION DOCUMENT PACKAGE	3/18/16
3	PLAN CHECK SUBMITTAL	3/18/16
4	PLAN CHECK CORRECTION #1	04/1/16

SAA ASSOCIATES
Architecture Development Management
P.O. BOX 93786,
PASADENA, CA 91109
T: 818-437-8452

PROJECT: MADRONA MARSH NATURE CENTER IMPROVEMENTS

ADDRESS: 3201 PLAZA DEL AMO BOULEVARD TORRANCE, CA 90503

DRAWING TITLE: COVER SHEET

PRINT DATE: 04/19/2016

PROJECT NUMBER: XXXX

APPLICATION NUMBER:

SHEET NUMBER: G001

F:\Backup 1\MDJ\SAA & Assoc\Madrona Marsh\Cb\mm-S-001-COVER SHEET.dwg 04/19/2016 00:53

GENERAL NOTES

1. BUILDING CODE REQUIREMENTS TAKE PRECEDENCE OVER THE DRAWINGS AND IT SHALL BE THE RESPONSIBILITY OF ANYONE SUPPLYING LABOR OR MATERIALS OR BOTH TO BRING THE ATTENTION OF THE ARCHITECT AND DISCREPANCIES OR CONFLICT BETWEEN THE REQUIREMENTS OF THE CODE AND THE DRAWINGS.

2. REFERENCE TO ANY DETAIL OR DRAWING IS FOR CONVENIENCE ONLY AND DOES NOT LIMIT THE APPLICATION OF SUCH DETAIL OR DRAWINGS.

3. THE STRUCTURAL, ELECTRICAL DRAWINGS ARE SUPPLEMENTARY TO THE ARCHITECTURAL DRAWINGS. IT SHALL BE THE RESPONSIBILITY OF THE CONTRACTOR (S) TO CHECK WITH THE ARCHITECTURAL DRAWINGS BEFORE INSTALLATION AND/OR FABRICATION OF ALL WORK. NOTIFY ARCHITECT OF DISCREPANCIES BETWEEN THE ARCHITECTURAL DRAWINGS AND THE CONSULTING ENGINEER'S WORK, MILLWORK, AND OTHER CONTRACTORS OR VENDORS WORK. ALL WORK INSTALLED IN CONFLICT WITH THE ARCHITECTURAL DRAWINGS SHALL BE CORRECTED BY THE GENERAL CONTRACTOR AT THEIR EXPENSE, AND NO EXPENSE TO THE OWNER, TENANT, OR ARCHITECT AND WITH NO DELAY IN PROJECT.

4. DISCREPANCIES IN THE DRAWINGS ARE BETWEEN THE DRAWINGS AND ACTUAL FIELD CONDITIONS SHALL BE REPORTED TO THE ARCHITECT. CORRECTED DRAWINGS OR INSTRUCTIONS SHALL BE ISSUED BY THE ARCHITECT OR PRIOR TO THE INSTALLATION OF ANY WORK.

5. CONTRACTOR TO CHECK AND VERIFY SIZE AND LOCATION OF DUCTS, PLUMBING RUNS, AND MECHANICAL EQUIPMENT WITH MECHANICAL AND PLUMBING CONTRACTORS BEFORE CONSTRUCTING WALLS, FLOORS, CEILINGS, CABINETS, EQUIPMENT BASES, ETC.

6. GENERAL CONTRACTOR IS RESPONSIBLE FOR ALL WORK SHOWN ON THE DRAWINGS AND SPECIFICATIONS UNLESS SPECIFICALLY NOTED OTHERWISE.

7. DO NOT SCALE DRAWINGS. CONTRACTOR SHALL VERIFY ALL CONDITIONS AND DIMENSIONS AT THE JOB SITE PRIOR TO BIDDING AND START OF CONSTRUCTION. IF DISCREPANCIES ARE FOUND, ARCHITECT SHALL BE NOTIFIED FOR CLARIFICATION. THERE SHALL BE NO EXPENSE TO OWNER, TENANT OR DESIGNER TO CORRECT WORK RESULTING OF SUCH DISCREPANCIES OR CONDITIONS.

8. THE CONTRACT DRAWINGS AND SPECIFICATIONS REPRESENT THE FINISHED STRUCTURE UNLESS OTHERWISE SHOWN. THEY DO NOT INDICATE THE METHOD OF CONSTRUCTION. THE CONTRACTOR SHALL SUPERVISE AND DIRECT THE WORK AND SHALL BE SOLELY RESPONSIBLE FOR ALL CONSTRUCTION MEANS, METHODS, TECHNIQUES, SEQUENCES, AND PROCEDURES. OBSERVATIONS VISITS TO THE SITE BY FIELD REPRESENTATIVES OF THE ARCHITECT AND HIS ENGINEERS SHALL NOT INCLUDE INSPECTIONS OF THE PROTECTIVE MEASURES OR THE CONSTRUCTION PROCEDURES REQUIRED FOR SAME, WHICH ARE THE SOLE RESPONSIBILITY OF THE CONTRACTOR. ANY SUPPORT SERVICES PERFORMED BY THE ARCHITECT AND HIS ENGINEERS DURING CONSTRUCTION SHALL BE DISTINGUISHED FROM CONTINUOUS AND DETAILED INSPECTION SERVICES, WHICH ARE FURNISHED BY INSPECTION SERVICES, WHICH ARE FURNISHED BY OTHERS. THESE SUPPORT SERVICES PERFORMED BY THE ARCHITECT AND HIS ENGINEERS, WHETHER OF MATERIAL OR WORK AND WHETHER PERFORMED TO, DURING AFTER COMPLETION OF CONSTRUCTION ARE PERFORMED SOLELY FOR THE PURPOSE OF ASSISTING IN QUALITY CONTROL AND IN ACHIEVING CONFORMANCE WITH CONTRACT DRAWINGS AND SPECIFICATIONS. BUT THEY DO NOT GUARANTEE CONTRACTOR'S PERFORMANCE AND SHALL NOT BE CONSTRUED AS SUPERVISION OF CONSTRUCTION.

9. GENERAL CONTRACTOR SHALL BE RESPONSIBLE FOR OBTAINING A TEMPORARY CERTIFICATE OF OCCUPANCY AND SHALL OBTAIN ALL REQUIRED SIGNATURES AND PAY FEES FOR SAME.

10. CONTRACTORS SHALL PROVIDE PROTECTION DURING CONSTRUCTION.

11. THE GENERAL CONTRACTOR IS REQUIRED TO SUBMIT SHOP DRAWINGS FOR ARCHITECT'S APPROVAL PRIOR TO ORDERING OR FABRICATION FOR ALL WORK THAT THIS TO BE INSTALLED ON THE JOB. SUBMIT MIN. (4) SETS TO THE ARCHITECT FOR APPROVAL.

12. ALL SYMBOLS AND ABBREVIATIONS USED ON THE DRAWINGS ARE CONSIDERED TO BE CONSTRUCTION STANDARDS. IF THE CONTRACTOR QUESTIONS REGARDING SAME, OR THEIR EXACT MEANING, ARCHITECT SHALL BE NOTIFIED FOR CLARIFICATION.

13. THE GENERAL CONTRACTOR SHALL CUT, PATCH, AND REPAIR ALL EXISTING BUILDING SHELL AND CORE FLOOR. WALL AND CEILING SURFACES TO REMAIN AS REQUIRED TO RECEIVE NEW WORK. FINISH, FLUSH, AND MATCH EXISTING ADJACENT MATERIALS AND SURFACES, U.O.N.

14. THE GENERAL CONTRACTOR SHALL BE RESPONSIBLE FOR THE RELOCATION OF ALL EXISTING "BASE BUILDING" OR NEW WORK: ELECTRICAL, MECHANICAL, PLUMBING FIXTURES, LIFE SAFETY SYSTEM, OR EQUIPMENT THAT IS IN CONFLICT WITH ARCHITECT'S DRAWINGS, U.O.N.

15. THE GENERAL CONTRACTOR SHALL PROVIDE AND INSTALL ALL NECESSARY ACCESS PANELS REQUIRED FOR MECHANICAL, PLUMBING, AND ELECTRICAL WORK ON THE JOB & SHALL COORDINATE LOCATIONS WITH ARCHITECT AT JOB SITE PRIOR TO INSTALLATION. ALL WORK INSTALLED PRIOR TO ARCHITECTS WRITTEN APPROVAL SHALL BE CORRECTED BY THE GENERAL CONTRACTOR EXPENSE AND AT NO EXPENSE TO THE OWNER, TENANT, OR ARCHITECT. ACCESS PANELS SHALL BE MINIMUM SIZE REQUIRED.

16. CONTRACTOR SHALL COORDINATE WITH THE CLIENT/USER THE SCHEDULE FOR ALL TELEPHONE, DATA, AND AV INSTALLATIONS.

17. CONTRACTORS SHALL NOTIFY THE OWNER IMMEDIATELY OF ALL UTILITIES DETERMINED IN COURSE OF CONSTRUCTION AS BEING NECESSARY TO BE TEMPORARILY SHUT OFF, MODIFIED, AND/OR REMOVED WHICH OTHERWISE HAVE NOT BEEN NOTED FOR IN THE CONTRACT DOCUMENTS. CONTRACTOR SHALL REMOVE SUCH UTILITIES ONLY AFTER CONSULTATION WITH THE ARCHITECT, CLIENT, AND OWNER MANAGEMENT REP. WHETHER PRE-DETERMINED IN THE CONSTRUCTION DOCUMENTS OR DETERMINED LATER IN FIELD, DISCONNECT, CUT BACK TO SOURCE AND CAP ALL UTILITY SERVICES REMOVED, SEAL ALL PENETRATIONS CREATED BY REMOVAL OF UTILITY TO MATCH ADJACENT CONSTRUCTION AND FINISHES.

18. "ALIGN" SHALL MEAN TO ACCURATELY LOCATE FINISH FACES IN THE SAME PLANE.

19. "TYPICAL" OR "TYP." SHALL MEAN THAT THE CONDITION IS REPRESENTATIVE FOR SIMILAR CONDITIONS THROUGHOUT, UNLESS OTHERWISE NOTED. DETAILS ARE USUALLY KEYED AND NOTED "TYP." ONLY ONCE, WHEN THEY FIRST OCCUR.

20. "SIMILAR" MEANS COMPARABLE CHARACTERISTICS FOR THE CONDITIONS NOTED. VERIFY DIMENSIONS & ORIENTATION ON PLANS AND ELEVATORS.

21. G.C. TO FURNISH AND INSTALL ALL SPECIFIED MATERIALS IN SUCH A MANNER AS TO PROVIDE A COMPLETE AND FINISHED SYSTEM W/OUT REQUIREMENT OF ADDITIONAL PARTS, MATERIALS, AND LABOR TO COMPLETE.

22. PRIOR TO SUBMITTAL OF BIDS, THE GENERAL CONTRACTOR AND SUB-CONTRACTORS SHALL IDENTIFY IN WRITING ANY AND ALL DISCREPANCIES AND/OR OMISSIONS OF MATERIAL REQUIRED FOR A COMPLETE JOB. NO CHANGE ORDERS WILL BE ALLOWED FOR OBVIOUS DISCREPANCIES NOT IDENTIFIED IN WRITING.

23. THE CONTRACTOR SHALL MAINTAIN FOR THE DURATION OF THE WORK ALL EXITS, EXIT LIGHTING, FIRE PROTECTIVE DEVICES AND ALARMS IN CONFORMANCE WITH ALL APPLICABLE CODES AND ORDINANCES.

24. ALL MANUFACTURED ARTICLES, MATERIALS, AND EQUIPMENT SHALL BE APPLIED, INSTALLED, CONNECTED, ERECTED, CLEANED, AND CONDITIONED PER MANUFACTURERS INSTRUCTIONS. IN CASE OF DIFFERENCES BETWEEN THE MANUFACTURERS INSTRUCTIONS AND THE CONTRACT DOCUMENTS, THE CONTRACTOR SHALL NOTIFY THE CONSTRUCTION MANAGER AND ARCHITECT BEFORE PROCEEDING.

25. ANY DIMENSION IDENTIFIED AND NOTED AS "VERIFY" MUST BE CONFIRMED BY THE CONTRACTOR AND REVIEWED BY THE ARCHITECT, BEFORE PROCEEDING W/WORK.

26. THE ARCHITECT HAS NO KNOWLEDGE OF AND SHALL NOT BE HELD LIABLE FOR ANY ASBESTOS OR OTHER HAZARDOUS MATERIALS ON THE JOBSITE. IF ASBESTOS OR OTHER HAZARDOUS MATERIALS ARE DISCOVERED DURING CONSTRUCTION, THE CONTRACTOR SHALL ISOLATE THE AFFECTED AREA AND CONTACT THE CONSTRUCTION MANAGER AND OWNER FOR FURTHER INSTRUCTIONS BEFORE PROCEEDING.

27. ALL PARTITIONS ARE DIMENSIONED FROM FACE OF STUD OR CENTERLINE OF STUD, UNLESS OTHERWISE NOTED. ALL DIMENSIONS MARKED "CLEAR" SHALL BE MAINTAINED AND SHALL ALLOW FOR THICKNESS OF ALL FINISHES, INCLUDING CARPET (AND CUSHION), CERAMIC TILE, VCT, ETC.

28. FIXED WINDOWS SHALL BE SEALED TO LIMIT AIR INFILTRATION. BETWEEN WALL PANELS AND AT WALLS AND ROOF, BETWEEN WALLS, AND AT PENETRATIONS OF UTILITIES THROUGH ENVELOPE SHALL BE SEALED, CAULKED, OR WEATHER STRIPPED TI LIMIT AIR LEAKAGE.

29. A PROTECTION FENCE SHALL BE CONSTRUCTED AND MAINTAINED DURING CONSTRUCTION CONFORMING TO THE REQUIREMENTS OF THE BUILDING CODE.

30. THE CONTRACTOR WARRANTS TO THE OWNER AND THE ARCHITECT THAT ALL MATERIALS AND EQUIPMENT FURNISHED WILL BE NEW UNLESS OTHERWISE SPECIFIED AND THAT ALL WORK WILL BE OF GOOD QUALITY, FREE FROM FAULTS AND DEFECTS.

31. THE CONTRACTOR SHALL BE RESPONSIBLE FOR COORDINATING HIS WORK AND/OR EQUIPMENT SUPPLIED BY THE OWNER.

32. GYPSUM BOARD AT EXTERIOR AREAS, KITCHEN, TOILET ROOMS, AND ALL GARAGES TO BE MOISTURE RESISTANT TYPE.

33. PROVIDE FACILITIES FOR THE PHYSICALLY HANDICAPPED IN ACCORDANCE WITH C.A.C. TITLE 24 AND AS REQUIRED BY THE 2013 CALIFORNIA BUILDING CODE.

34. EXIT DOORS, EXIT LIGHTS, AND FIRE EXTINGUISHERS LOCATIONS SHALL NOT BE CONCEALED OR OBSTRUCTED BY ANY DECORATIVE MATERIAL.

35. IT SHALL BE THE RESPONSIBILITY OF THE CONTRACTOR TO LOCATE ALL EXISTING UTILITIES WHETHER SHOWN HEREON OR NOT AND PROTECT THEM FROM DAMAGE. THE CONTRACTOR SHALL BEAR ALL EXPENSE OR REPAIR OR REPLACEMENT IN CONJUNCTION WITH THE EXECUTION OF THIS WORK.

36. ALL BUILDING SHALL BE ON SEPARATE PERMIT.

37. MAINTAIN SANITARY TOILET FACILITIES DURING CONSTRUCTION AS REQUIRED BY APPLICABLE REGULATIONS.

38. WHENEVER A REFERENCE TO A SPECIFIC BRAND NAME IS MADE IN THESE CONTRACT DOCUMENTS, IT IS ILLUSTRATIVE AND TO BE CONSTRUED AS A SPECIFICATION WHICH DESCRIBES A COMPONENT THAT HAS BEEN TESTED OR EVALUATED AS BEST MEETING THE OPERATIONAL DESIGN, PERFORMANCE MAINTENANCE QUALITY AND RELIABILITY STANDARDS AND REQUIREMENTS OF THE CITY OF LOS ANGELES, THEREBY INCORPORATING THESE REQUIREMENTS BY REFERENCE WITHIN THE CONTRACT DOCUMENTS. AN EQUIVALENT (OR EQUAL) MAY BE OFFERED BY THE BIDDER SUBJECT TO TESTING AND EVALUATION BY THE CITY PRIOR TO AWARD OR BID.

39. ALL DRAWINGS AND DETAILS SHOWN IN THESE DRAWINGS, WHETHER REFERENCED OR NOT REFERENCED, SHALL BE PART OF PROJECT SCOPE.

40. CONTRACTOR SHALL IMMEDIATELY NOTIFY ARCHITECT AND REQUEST CLARIFICATION FOR DISCREPANCIES OR OMISSIONS BETWEEN ARCHITECTURAL, STRUCTURAL, AND ELECTRICAL DRAWINGS.

PHOTOVOLTAIC GLASS AND SKYLIGHT NOTES

1. ALUMINUM: ALL EXTRUDED ALUMINUM SHALL BE OF 6063-T5 ALLOW AND TEMPER.

2. FINISH: ALL EXPOSE ALUMINUM SHALL BE PROVIDED IN A TWO-COAT KYNAR PAINT. FINISH TO MATCH EXISTING STOREFRONT.

3. GLAZING: 25MM OPAL TRIPLEWALL POLYCARBONATE.

4. GLAZING BLOCKS: ALL GLAZING SHALL HAVE ¼"THK. X4" LONG THERMOPLASTIC RUBBER (T.P.R.) GLAZING BLOCKS AT THE LOWER CORNERS OF EACH GLAZING PANEL OR AS REQUIRED FOR PROPER PLACEMENT OF GLAZING.

5. GASKETS: GLAZING GASKETS SHALL BE EXTRUDED E.P.D.M. OR CLOSED CELL FOAM GLAZING TAPE OR AS SPECIFIED.

6. SEALANT: ALL SEALANT SHALL BE DOW-CORNING 795 SILICONE. ALL SEALANT SHALL BE APPLIED IN ACCORDANCE WITH THE MANUFACTURERS STANDARD WRITTEN INSTRUCTIONS. SEE THESE PROJECT DRAWINGS FOR SPECIFIC SEALANT APPLICATIONS.

7. SEALANT COLOR: TRANSLUCENT AND TO BE APPROVED BY THE ARCHITECT AS PART OF SHOP DRAWING SUBMITTAL

8. DISSIMILAR MATERIALS SEPARATION: AT LOCATIONS WHERE THE SKYLIGHT (S), ALUMINUM CAN CONTACT A DISSIMILAR MATERIAL. A SEPARATOR SHALL BE USED. MATERIALS INCLUDE (BUT ARE NOT LIMITED TO) NYLON REINFORCED BAKING TAPE, STAINLESS STEEL, PLASTIC OR ACRYLIC SHIMS AND ASPHALTIC EMULSIVE PAINT.

9. CONFORMANCE: ALL FABRICATION OF THE ALUMINUM FRAMING MEMBERS SHALL CONFORM TO GUIDELINES AS SET FORTH BY THE AMERICAN ALUMINUM MANUFACTURERS ASSOCIATION (A.A.M.A.).

10. WELDING: ALL WELDING SHALL BE UTILIZING THE HEL ARC/T IG PROCESS.

11. INSTALLATION: PRIOR TO THE INSTALLATION OF SKYLIGHTS THE INSTALLER SHALL VERIFY THAT THE FIELD CONDITIONS CONFORM TO THE INSTALLATION FABRICATION DRAWINGS FOR THE PROJECT.

14. SITE ACCESS: THE CONTRATOR SHALL FIELD VERIFY DURING BIDDING TO CONFIRM REQUIREMENT FOR LOADING, UNLOADING AND IMPLEMENTATION OF WORK AND INCLUDE ALL REQUIREMENTS IN IT'S BID PRICE.

OBSERVATION AREA AT MARSH

1. CONTRACTOR SHALL FIELD VERIFY AND PREPARE A FIELD SURVEY FOR THE ARCHITEC'S REVIEW TO LOCATE THE OBSERVATION AREA. REPORT ANY CONFLICT BETWEEN THE DRAWINGS AND THE SITE CONDTIONS TO THE ARCHITECT.

2. ALL PLANTING SHOWN ON DRAWINGS ARE N.IC AND SHALL BE PROVIDED BY THE OWNER.

3. CONTRACTOR SHALL PROVIDE A SUBMITTAL FOR BOTH THE SPLIT WOOD RAIL FENCE AND THE CHAIN LINK FENCE FOR THE ARCHITECT'S APPROVAL.

CLASSROOM AREA

1. CONTRACTOR SHALL SECURE AND PROTECT THE NEW OPENINGS FOR WINDOWS FROM BOTH INCLEMENT WEATHER AND UNSECURED ACESS TO THE BUILDING DURING THE IMPLEMENTATION OF WORK WITH A SOLID BARRIER THAT CAN NOT BE EASILY REMOVED TO GAIN ACESS INTO THE BUILDING.

2. FIELD VERIFY EXISTING DIMENSIONS PRIOR TO THE COMMENCEMENT OF WORK

4. CONFRIM EXTERIOR CONDUIT LOCATION WITH THE ARCHTECT AND OWMER PRIOR TO THE COMMENCEMENT OF WORK

GENERAL NOTES

INTERNATIONAL SYMBOL OF ACCESSIBILITY

NOTE: THE INTERNATIONAL SYMBOL OF ACCESSIBILITY SHALL BE STANDARD USED TO IDENTIFY FACILITIES THAT ARE ACCESSIBLE TO AND USABLE BY PHYSICALLY DISABLED PERSONS AS SET FORTH IN TITLE 24 AND AS SPECIFICALLY REQUIRED BELOW.

1. THE INTERNATIONAL SYMBOL OF ACCESSIBILITY SHALL CONSIST OF A WHILE FIGURE ON A BLUE BACKGROUND. THE BLUE SHALL BE EQUAL TO COLOR NO. 15090 IN FEDERAL STANDARD 595B.
2. LETTERS AND NUMBERS ON SIGNS SHALL HAVE A WIDTH RATIO BETWEEN 3:5 AND 1:1 AND A STROKE WIDTH RATIO BETWEEN 1:5 AND 1:10.
3. CHARACTERS AND NUMBERS ON SIGNS SHALL BE SIZED ACCORDING TO THE VIEWING DISTANCE FROM WHICH THEY ARE TO BE READ. THE MIN. HEIGHT IS MEASURED USING ON UPPERCASE X. LOWERCASE CHARACTERS ARE PERMITTED. FOR SIGNS SUSPENDED OR PROJECTED ABOVE THE FINISH FLOOR IN COMPLIANCE WITH SECTION 11B-703, THE MIN. CHARACTER HEIGHT SHALL BE 3".
4. CHARACTERS AND SYMBOLS SHALL CONTRAST WITH THEIR BACKGROUND, EITHER LIGHT CHARACTERS ON A DARK BACKGROUND OR DARK CHARACTERS ON A LIGHT BACKGROUND.
5. WHEN RAISED CHARACTERS OR SYMBOLS ARE USED, THEY SHALL CONFORM TO THE FOLLOWING:
   A. LETTERS AND NUMBERS AND SIGNS SHALL BE RAISED 1/32" MIN. AND SHALL BE SANS-SERIF UPPERCASE CHARACTERS ACCOMPANIED BY GRADE 2 BRAILLE.
   B. RAISED CHARACTERS OR SYMBOLS SHALL BE A MIN. OF 5/8" HIGH.
   C. PICTORIAL SYMBOL SIGNS (PICTOGRAMS) SHALL BE ACCOMPANIED BY THE EQUIVALENT VERBAL DESCRIPTION PLACED DIRECTLY BELOW THE PICTOGRAM SHALL BE MIN. OF 6" IN HEIGHT.
6. CONTRACTED GRADE 2 BRAILLE SHALL BE USED WHEREVER BRAILLE SYMBOLS ARE SPECIFICALLY REQUIRED IN OTHER PORTIONS OF THESE STANDARDS. DOTS SHALL BE 1/10" ON CENTERS IN EACH CELL WITH 2/10" SPACE BETWEEN CELLS. DOTS SHALL BE RAISED A MIN. OF 1/40" ABOVE THE BACKGROUND.
7. ALL BUILDING ENTRANCES THAT ARE ACCESSIBLE TO AND USABLE BY PERSONS WITH DISABILITIES ROUTE OF TRAVEL SHALL BE IDENTIFIED WITH A SIGN DISPLAYING THE INTERNATIONAL SYMBOL OF ACCESSIBILITY AND WITH ADDITIONAL DIRECTIONAL SIGNS, AS REQ'D, TO BE VISIBLE TO PERSONS ALONG APPROACHING PEDESTRIAN WAYS.
8. WHEN PERMANENT IDENTIFICATION IS PROVIDED FOR ROOMS AND SPACES RAISED LETTER SHALL BE PROVIDED AND SHALL BE ACCOMPANIED BY BRAILLE IN CONFORMANCE WITH SECTIONS 11B-703.3 & 11B-703.4. SIGNS SHALL BE INSTALLED ON THE WAY ADJACENT TO THE LATCH OUTSIDE OF THE DOOR. WHERE THERE IS NO WALL SPACE ON THE LATCH SIDE, INCLUDING AT DOUBLE LEAF DOORS, SIGNS SHALL BE PLACED ON THE NEAREST ADJACENT WALL, PREFERABLY ON THE RIGHT. MOUNTING HEIGHT SHALL BE 58" TO 60" ABOVE THE FINISHED FLOOR TO THE CENTERLINE OF THE SIGN. MOUNTING LOCATION SHALL BE DETERMINED SO THAT A PERSON MAY APPROACH WITHIN 3" SIGNAGE WITHOUT ENCOUNTERING PROTRUDING OBJECTS OR STANDING WITHIN THE SWING OF A DOOR.

ACCESSIBILITY SYMBOL 02-C-09 N.T.S. 8

ASSEMBLY OCCUPANCIES

1. PROVIDE ________ SEATS/CHAIRS FOR PEOPLE USING WHEELCHAIRS.
2. PROVIDE ________ SEATS FOR SEMI-AMBULANT PERSON (AT LEAST 1% OF THE TOTAL SEATING BUT NO FEWER THAN TWO) WHICH PROVIDE AT LEAST 24" OF CLEAR LEG SPACE BETWEEN THE FRONT OF THE SEAT TO THE NEAREST OBSTRUCTION OR TO THE BACK OF THE SEAT IMMEDIATELY IN FRONT.
3. 1%, BUT NOT LESS THAN 1, OF ALL FIXED SEATS SHALL BE AISLE SEATS WITH NO ARMREST ON THE AISLE SIDE, OR REMOVABLE OR FOLDING ARMREST ON THE AISLE SIDE. EACH SUCH SEAT SHALL BE IDENTIFIED BY A SIGN OR MARKER. SIGNAGE NOTIFYING PATRONS OF THE AVAILABILITY OF SUCH SEATS SHALL BE PASTED AT THE TICKET OFFICE.
4. AT LEAST ONE COMPANION FIXED SEAT SHALL BE PROVIDED NEXT TO EACH WHEELCHAIR SEATING AREA.
5. WHEN THE SEATING CAPACITY EXCEED 300, WHEELCHAIR SPACES SHALL BE PROVIDED IN MORE THAN ONE LOCATION. IN ADDITION, REGARDLESS OF SEATING CAPACITY, WHEELCHAIR SPACES SHALL BE PROVIDED IN A VARIETY OF LOCATIONS SO AS TO PROVIDE PERSON WITH DISABILITIES A CHOICE OF ADMISSION PROCESS OF SIGHTS OTHERWISE TO MEMBERS OF THE GENERAL PUBLIC.
6. EACH WHEELCHAIR SEAT/SPACE ADJOIN IN EGRESS AISLE ON AT LEAST ONE SIDE.
7. EACH WHEELCHAIR/SPACE SHALL BE LEVEL AND PROVIDE A MIN. CLEAR FLOOR OR GROUND SPACE OF 33" IN WIDTH AND 60" (SIDE ACCESS) OR 48" (FRONT OR REAR ACCESS) IN DEPTH.
8. READILY REMOVABLE SEATS MAY NOT INSTALLED IN WHEELCHAIR SPACES WHEN SUCH SPACES ARE NOT BEING USED TO ACCOMMODATE WHEELCHAIR USERS.
9. STAGES, ENCLOSED AND UNENCLOSED PLATFORMS, AND ORCHESTRA PITS SHALL BE MADE ACCESSIBLE TO PERSONS WITH DISABILITIES.
10. AN ACCESSIBLE ROUTE SHALL CONNECT WHEELCHAIR SEATING LOCATIONS WITH PERFORMING AREAS INCLUDING STAGES, AREA FLOORS, DRESSING ROOMS, LOCKER ROOMS, AND OTHER SPACES USED BY PERSONS.
11. CUSTOMER AND EMPLOYEE SIDES OF TICKET BOOTHS AND OF CONCESSION AND REFRESHMENT FACILITIES SHALL BE MADE ACCESSIBLE TO PERSONS WITH DISABILITIES (AUDITORIUM, ASSEMBLY HALLS, THEATERS AND RELATED FACILITIES).
12. THE CUSTOMER SIDE OF A TICKET BOOTH SHALL BE, AND EMPLOYEE SIDE MAY BE, ACCESSIBLE TO PERSONS WITH DISABILITIES (STADIUMS, GRANDSTANDS, BLEACHERS, ATHLETIC PAVILIONS, GYMNASIUM, AND MISC., SPORT-RELATED FACILITIES.)
13. CLUBROOMS AND SPECTATOR AND/OR PARTICIPANT SANITARY AND/OR LOCKER FACILITIES SHALL BE ACCESSIBLE TO PERSONS WITH DISABILITIES.

OCCUPANCY 02-C-10 N.T.S. 7

1. WALKS AND SIDEWALKS SUBJECT TO THESE REGULATIONS SHALL HAVE A CONTINUOUS COMMON SURFACE, NOT INTERRUPTED BY STEPS OR BY ABRUPT CHANGES IN LEVEL EXCEEDING ½"
2. WALKS AND SIDEWALKS SHALL BE A MINIMUM OF 48" (1219mm) IN WIDTH.
3. CHANGES IN LEVEL UP TO 1/4" MAY BE VERTICAL AND WITHOUT EDGE TREATMENT.
4. CHANGES IN LEVEL BETWEEN 1/4" AND 1/2" SHALL BE BEVELED WITH A SLOPE NO GREATER THAN ONE UNIT VERTICAL IN 2 UNITS HORIZONTAL (50% SLOPE).
5. CHANGES IN LEVEL GREATER THAN 1/2" SHALL BE ACCOMPLISHED BY MEANS OF A CURB RAMP, RAMP OR ELEVATOR THAT COMPLIES WITH SECTION 11B-405, 11B-406 OR 11B-407 RESPECTIVELY.
6. WALK AND SIDEWALK SURFACES SHALL BE SLIP-RESISTANT AS FOLLOWS:
   A. SURFACES WITH LESS THAN 6% SLOPE SHALL BE AT LEAST AS SLIP-RESISTANT AS THAT DESCRIBED AS A MEDIUM SALTED FINISH.
   B. SURFACES WITH A 6% OR GREATER SLOPE SHALL BE SLIP-RESISTANT.
7. WHEN THE SLOPE IN THE DIRECTION OF TRAVEL OF ANY WALK EXCEEDS ONE UNIT VERTICAL IN 20 UNITS HORIZONTAL (5% SLOPE) IT SHALL COMPLY WITH THE PROVISIONS OF SECTION 11B-405.
8. WALK AND SIDEWALK SURFACE CROSS SLOPES SHALL NOT EXCEED ONE UNIT VERTICAL IN 48 UNITS HORIZONTAL (2.083% SLOPE).
9. ALL WALKS WITH CONTINUOUS GRADIENTS SHALL HAVE LEVEL AREAS AT LEAST 5 FEET IN LENGTH AT INTERVALS OF 400 FEET MAXIMUM.
10. WALKS, SIDEWALKS AND PEDESTRIAN WAYS SHALL BE FREE OF GRATINGS, WHENEVER POSSIBLE. FOR GRATINGS LOCATED IN THE SURFACE OF ANY OF THESE AREAS, GRID OPENINGS IN GRATINGS SHALL BE LIMITED TO 1/2" IN THE DIRECTION OF TRAFFIC FLOW. IF GRATINGS HAVE ELONGATED OPENINGS, THEY SHALL BE PLACED SO THAT THE LONG DIMENSION IS PERPENDICULAR TO THE DOMINANT DIRECTION OF TRAVEL.

WALKS & SIDEWALKS 02-A-05 N.T.S. 6

1. THE HIGHEST AND LOWEST OPERABLE PART OF ALL CONTROLS, DISPENSERS, RECEPTACLES AND OTHER OPERABLE EQUIPMENT SHALL BE PLACED WITHIN ONE OF THE REACH RANGES SPECIFIED IN SECTION 11B-308.
2. CONTROLS AND OPERATING MECHANISMS SHALL BE OPERABLE WITH ONE HAND AND SHALL NOT REQUIRE TIGHT GRASPING, PUNCHING OR TWISTING OF THE WRIST. THE FORCE REQUIRED TO ACTIVATE CONTROLS SHALL BE NO GREATER THAN 5 POUNDS.
3. FOR ACCESSIBLE LAVATORIES, FAUCET CONTROLS AND OPERATING MECHANISMS SHALL BE OPERABLE WITH ONE HAND AND SHALL NOT REQUIRE GRASPING, PINCHING OR TWISTING OF THE WRIST. THE FORCE REQUIRED TO ACTIVATE FAUCET CONTROLS AND OPERATING MECHANISMS SHALL BE NO GREATER THAN 5 POUNDS. LEVER OPERATED, PUSH TYPE AND ELECTRONICALLY CONTROLLED MECHANISMS ARE EXAMPLES OF ACCEPTABLE DESIGNS. SELF CLOSING VALVES ARE ALLOWED IF THE FAUCET REMAINS OPEN FOR AT LEAST 10 SECONDS.
4. THE CENTER OF FIRE ALARM INITIATING DEVICES (BOXES) SHALL BE LOCATED 48 INCHES ABOVE THE LEVEL OF THE ADJACENT FLOOR, WORKING PLATFORM, GROUND SURFACE, OR SIDEWALK.
5. INTERNATIONAL SYMBOL OF ACCESSIBILITY SHALL CONSIST OF A WHITE FIGURE ON BLUE BACKGROUND. THE BLUE SHALL BE EQUAL TO COLOR NO. 15090 IN FEDERAL STANDARD 595A.
6. CONTROLS AND OPERATING MECHANISMS IN ACCESSIBLE SPACES, ALONG ACCESSIBLE ROUTES OR AS PART OF ACCESSIBLE ELEMENTS AND THOSE IN SECTION 1.9.1 ARE REQUIRED TO BE ACCESSIBLE.
7. CLEAR FLOOR SPACE COMPLYING WITH SECTION 11B-305 THAT ALLOWS A FORWARD OR PARALLEL APPROACH BY A PERSON USING A WHEELCHAIR SHALL BE PROVIDED AT CONTROLS, DISPENSERS, RECEPTACLES, AND OTHER OPERABLE EQUIPMENT.
8. THE TOPS OF TABLES AND COUNTERS SHALL BE 28" TO 34" FROM THE FLOOR OR GROUND.
9. SANITARY FACILITIES THAT SERVE BUILDINGS, FACILITIES OR PORTIONS OF BUILDINGS OR FACILITIES THAT ARE REQUIRED TO BE ACCESSIBLE BY THESE STANDARDS SHALL CONFORM TO THE REQUIREMENTS OF SECTION 11B-308.
10. TOILET ROOM FLOORS SHALL HAVE A SMOOTH, HARD, NON-ABSORBANT SURFACE SUCH AS PORTLAND CEMENT, CONCRETE, CERAMIC TILE OR OTHER APPROVED MATERIAL WHICH EXTENDS UPWARD ON THE WALLS AT LEAST 5". WALLS WITHIN WATER CLOSET COMPARTMENTS AND WALLS WITHIN 24" OF THE FRONT AND SIDES OF URINALS SHALL BE SIMILARLY FINISHED TO A HEIGHT OF 48" AND EXCEPT FOR STRUCTURAL ELEMENTS, THE MATERIAL USED IN SUCH WALLS SHALL BE OF A TYPE WHICH IS NOT ADVERSELY AFFECTED BY MOISTURE.
11. EVERY CORRIDOR SERVING AN OCCUPANT LOAD OF 10 OR MORE SHALL NOT BE LESS THAN 44" IN WIDTH.
12. CORRIDORS AND HALLWAYS THAT ARE LOCATED ON AN ACCESSIBLE ROUTE AND EXCEED 200 FEET IN LENGTH SHALL HAVE A MINIMUM CLEAR WIDTH OF 60". IF AN ACCESSIBLE ROUTE HAS LESS THAN 60" CLEAR WIDTH, THAN PASSING SPACES AT LEAST 60" BY 60" SHALL BE LOCATED AT INTERVALS OF 200 FEET MAXIMUM. A "T" INTERSECTION OF TWO CORRIDORS OR WALKS IS AN ACCEPTABLE PASSING PLACE.
13. EVERY PORTION OF EVERY BUILDING IN WHICH ARE INSTALLED SEATS, TABLES, MERCHANDISE, EQUIPMENT OR SIMILAR MATERIALS SHALL BE PROVIDED WITH AISLES LEADING TO AN EXIT.
14. EVERY AISLE SHALL BE NOT LESS THAN 36" SIDE IF SERVING ONLY ONE SIDE, AND NOT LESS THAN 44" WIDE IF SERVING BOTH SIDES.
15. AISLES SHALL COMPLY WITH FIGURES IN PROTRUDING OBJECTS SECTION FOR CIRCULATION AROUND OBSTRUCTIONS.

ADDITIONAL REQUIREMENTS 02-C-01 N.T.S. 5

SIGNAGE

1. WHERE PERMANENT IDENTIFICATION IS PROVIDED FOR ROOMS AND SPACES, RAISED LETTERS SHALL ALSO BE PROVIDED AND SHALL BE ACCOMPANIED BY BRAILLE. SECTION 11B-703.
2. THE SIGNAGE REQUIREMENTS OF SECTION 11B-703 ARE TO BE SATISFIED AT DOORWAYS LEADING ALL SANITARY FACILITIES.
3. THE SURFACE OF EACH ACCESSIBLE PARKING STALL SHALL HAVE A SURFACE IDENTIFICATION MEETING REQUIREMENTS OF SECTION 11B-703.7.2.1. CONTRACTOR SHALL OUTLINE A PROFILE VIEW OF A WHEELCHAIR WITH OCCUPANT IN WHITE ON BLUE BACKGROUND. THE PROFILE VIEW SHALL BE LOCATED SO THAT IT IS VISABLE TO A TRAFFIC ENFORCEMENT OFFICER WHEN A VEHICLE IS PROPERLY PARKED IN THE SPACE AND SHALL BE 36" HIGH BY 36" WIDE.
4. THE INTERNATIONAL SYMBOL OF ACCESSIBILITY SHALL CONSIST OF A WHITE FIGURE ON A BLUE BACKGROUND. THE BLUE SHALL BE EQUAL TO COLOR NO. 15090 IN FEDERAL STANDARD 595B.
5. ALL BUILDING AND FACILITY ENTRANCES THAT ARE ACCESSIBLE TO AND USABLE BY PERSONS WITH DISABILITIES AND AT EVERY MAJOR JUNCTION ALONG OR LEADING TO AN ACCESSIBLE ROUTE OF TRAVEL SHALL BE IDENTIFIED WITH A SIGN DISPLAYING THE INTERNATIONAL SYMBOL OF ACCESSIBILITY AND WITH ADDITIONAL DIRECTIONAL SIGNS TO BE VISIBLE TO PERSONS ALONG APPROACHING CIRCULATION PATHS.
6. WHERE PERMANENT IDENTIFICATION SIGNS ARE PROVIDED FOR ROOMS AND SPACES, SIGNS SHALL BE INSTALLED ON THE WALL ADJACENT TO THE LATCH SIDE OF THE DOOR. WHERE THERE IS NO WALL SPACE ON THE LATCH SIDE, INCLUDING AT DOUBLE LEAF DOORS, SIGNS SHALL BE PLACED ON THE NEAREST ADJACENT WALL, PREFERABLY ON THE RIGHT. WHERE PERMANENT IDENTIFICATION SIGNAGE IS PROVIDED FOR ROOMS AND SPACES THEY SHALL BE LOCATED ON THE APPROACH SIDE OF THE DOOR AS ONE ENTERS THE ROOM OR SPACE. SIGNS THAT IDENTIFY EXITS SHALL BE LOCATED ON THE APPROACH SIDE OF THE DOOR AS ONE EXITS THE ROOM OR SPACE. SIGNS WITH RAISED CHARACTERS AND BRAILLE SHALL BE LOCATED 48" MIN. ABOVE THE FINISH FLOOR OR GROUND SURFACE, MEASURED FROM THE BASELINE OF THE LOWEST LINE OF BRAILLE AND58" TO 60" MAX. ABOVE THE FINISH FLOOR OR GROUND SURFACE, MEASURED FROM THE BASELINE OF THE HIGHEST LINE OF RAISED CHARACTERS. MOUNTING LOCATION SHALL BE DETERMINED SO THAT A PERSON MAY APPROACH WITHIN 3" OF SIGNAGE WITHOUT ENCOUNTERING PROTRUDING OBJECTS OR STANDING WITHIN THE SWING OF A DOOR.
7. WHEN SIGNS DIRECT TO OR GIVE INFORMATION ABOUT PERMANENT ROOMS AND FUNCTIONAL SPACES OF A BUILDING OR SITE, THEY SHALL COMPLY WITH SECTION 11B-703.
8. WHEN RAISED CHARACTERS OR WHEN PICTOGRAM SYMBOLS ARE USED, THEY SHALL CONFORM TO THE FOLLOWING:
   A. CHARACTERS ON SIGNS SHALL BE RAISED OR RECESSED 1/32" MINIMUM AND SHALL BE SANS-SERIF UPPERCASE CHARACTERS ACCOMPANIED BY CONTRACTED(GRADE 2) BRAILLE COMPLYING WITH SECTION 11B-703.3.
   B. RAISED CHARACTERS OR SYMBOLS SHALL BE MINIMUM OF 5/8" HIGH AND A MAXIMUM OF 2" HIGH.
   C. PICTORAL SYMBOLS SIGNS (PICTOGRAMS) SHALL BE ACCOMPANIED BY THE VERBAL DESCRIPTION PLACED DIRECTLY BELOW THE PICTOGRAM. THE OUTSIDE DIMENSION OF THE PICTOGRAM FIELD SHALL BE A MIN. OF 6" IN HEIGHT.
   D. CHARACTERS AND BRAILLE SHALL BE IN A HORIZONTAL FORMAT. BRAILLE SHOULD BE PLACED A MINIMUM OF 3/8" AND A MAXIMUM OF 1/2" DIRECTLY BELOW THE TACTILE CHARACTERS; FLUSH LEFT OR CENTERED. WHEN TACTILE SIGN IS MULTI-LINED, ALL BRAILLE SHALL BE PLACED TOGETHER BELOW ALL LINES OF TACTILE TEXT.
   E. RAISED CHARACTERS ON SIGNS SHALL BE SELECTED FROM FONTS WHERE THE WIDTH OF THE UPPERCASE LETTER "O" IS 60% MIN. AND 110% MAX. OF THE HEIGHT OF THE UPPERCASE LETTER "I". STROKE THICKNESS OF THE UPPERCASE LETTER "I" SHALL BE 15% MAX. OF THE HEIGHT OF THE CHARACTER.
9. VISUAL CHARACTERS ON A SIGNS SHALL BE SELECTED FROM FONTS WHERE THE WIDTH OF THE UPPERCASE LETTER "O" IS 60% MIN. AND 110% MAX. OF THE HEIGHT OF THE UPPERCASE LETTER "I". STROKE THICKNESS OF THE UPPERCASE LETTER "I" SHALL BE 10% MIN. AND 20% MAX. OF THE HEIGHT OF THE CHARACTER.
10. CHARACTERS, SYMBOLS, AND THEIR BACKGROUNDS SHALL HAVE A NON GLARE FINISH. CHARACTERS AND SYMBOLS SHALL CONTRAST WITH THEIR BACKGROUND, EITHER LIGHT CHARACTERS ON A DARK BACKGROUND OR DARK CHARACTER ON A LIGHT BACKGROUND.
11. CHARACTERS AND NUMBERS ON SIGNS REQUIRED TO BE ACCESSIBLE BY SECTION 11B-703.5 AND SHALL BE SIZED ACCORDING TO THE TABLE 11B-703.5.5.
12. CONTRACTED (GRADE 2) BRAILLE SHALL BE USED WHEREVER BRAILLE IS REQUIRED IN OTHER PORTIONS OF THESE STANDARDS. DOTS SHALL BE 1/10" ON CENTERS IN EACH CELL WITH 2/10" SPACE BETWEEN CELLS. DOTS SHALL BE RAISED A MINIMUM OF 1/40" ABOVE THE BACKGROUND.

SIGNAGE 02-C-12 N.T.S. 4

1. IN NEW CONSTRUCTION, WHERE ONLY ONE DRINKING FOUNTAIN AREA IS PROVIDED ON A FLOOR, THERE SHALL BE A DRINKING FOUNTAIN WHICH IS ACCESSIBLE TO INDIVIDUALS WHO USE WHEELCHAIRS IN ACCORDANCE WITH SECTION 11B-602 AND ONE ACCESSIBLE TO THOSE WHO HAVE DIFFICULTY BENDING OR STOOPING. THIS CAN BE ACCOMMODATED BY THE USE OF A HI-LOW FOUNTAIN OR BY SUCH OTHER MEANS AS WOULD ACHIEVE THE REQUIRED ACCESSIBILITY FOR EACH GROUP ON EACH FLOOR.
2. A SIDE APPROACH DRINKING FOUNTAIN IS NOT ACCEPTABLE.
3. A CLEAR FLOOR SPACE SHALL BE PROVIDED IN CONFORMANCE WITH THE FOLLOWING:
   A. A MINIMUM CLEAR FLOOR SPACE 36" x 48" (762mm x 1219mm) TO ALLOW A PERSON IN A WHEELCHAIR TO APPROACH THE UNIT FACING FORWARD.
   B. A CLEAR KNEE SPACE A MINIMUM OF 30"(762mm) IN WIDTH.
   C. A CLEAR KNEE SPACE A MINIMUM OF 18"(457mm) IN DEPTH.
   D. A CLEAR AND UNOBSTRUCTED KNEE SPACE UNDER THE DRINKING FOUNTAIN NOT LESS THAN 27" (68mm) IN HEIGHT AND 11" (203.2MM) IN DEPTH, THE DEPTH MEASUREMENTS BEING TAKEN FROM THE FRONT EDGE OF THE FOUNTAIN.
   E. A TOE CLEARANCE OF 9"(228.6mm) IN HEIGHT ABOVE THE FLOOR AND 17" (432mm) IN DEPTH FROM THE FRONT EDGE OF THE FOUNTAIN.
3. WATER FLOW SHALL BE PROVIDED IN CONFORMANCE WITH THE FOLLOWING:
   A. THE SPOUT SHALL BE LOCATED WITHIN 5" (152.4mm) OF THE FRONT EDGE OF THE DRINKING FOUNTAIN OR AN ELECTRONICALLY CONTROLLED DEVICE.
   B. THE FLOW OF WATER AT LEAST 4" (101.6mm) HIGH MIN. AND SHALL BE LOCATED 5" MAX. FROM THE FRONT OF THE UNIT. THE ANGLE OF THE WATER STREAM SHALL BE MEASURED HORIZONTALLY RELATIVE TO THE FRONT FACE OF THE UNIT. WHERE THE SPOUTS ARE LOCATED LESS THAN 3" OF THE FRONT OF THE UNIT, THE ANGLE OF THE WATER STREAM SHALL BE 30 DEGREES MAX. WHERE SPOUTS ARE LOCATED BETWEEN 3" AND 5" MAX. FROM THE FRONT OF THE UNIT, THE ANGLE OF THE WATER STREAM SHALL BE 15 DEGREES MAX. ON AN ACCESSIBLE DRINKING FOUNTAIN WIT A ROUND OR OVAL BOWL, THE SPOUT MUST BE POSITIONED SO THE FLOW OF WATER IS WITHIN 3" OF THE FRONT EDGE OF THE FOUNTAIN.
   C. SPOUT OUTLETS SHALL BE 36" MAX. ABOVE THE FLOOR OR GROUND. THE SPOUT SHALL BE LOCATED 15" MIN. FROM THE VERTICAL SUPPORT AND 5" MAX. FROM THE FRONT EDGE OF THE UNIT, INCLUDING BUMPERS.
   D. THE FORCE REQUIRED TO ACTIVATE CONTROLS SHALL BE NO GREATER THAN 5 POUND-FORCE.
   E. MANUALLY OPERATED OR ELECTRONICALLY OPERATED CONTROLS SHALL BE LOCATED WITHIN 6" OF THE FRONT EDGE OF THE FOUNTAIN.
4. WATER FOUNTAINS SHALL BE LOCATED COMPLETELY WITHIN ALCOVES OR OTHERWISE POSITIONED SO AS NOT TO ENCROACH INTO PEDESTRIAN WAYS. THE ALCOVE IN WHICH THE WATER FOUNTAIN IS LOCATED SHALL NOT BE LESS THAN 32" (813mm) IN WIDTH AND 18" (457mm) IN DEPTH. PROTRUDING OBJECTS LOCATED IN ALCOVES OF OTHERWISE POSITIONED SO AS TO LIMIT ENCROACHMENT INTO PEDESTRIAN WAYS ARE PERMITTED TO PROJECT 4" (102mm) INTO WALKS, HALLS, CORRIDORS, PASSAGEWAYS OR AISLE
5. IF THERE IS AN UNREASONABLE HARDSHIP TO LOCATE THE WATER FOUNTAIN IN AN ALCOVE, THE FOUNTAIN MAY PROJECT INTO THE PATH OF TRAVEL, AND THE PATH OF TRAVEL SHALL BE IDENTIFIABLE TO THE BLIND AS FOLLOWS:
   A. THE SURFACE OF THE PATH OF TRAVEL AT THE WATER FOUNTAIN SHALL BE TEXTURED SO THAT IT IS CLEARLY IDENTIFIABLE BY A BLIND PERSON USING A CANE. THE MINIMUM TEXTURED AREA SHALL EXTEND FROM THE WALL SUPPORTING THE WATER FOUNTAIN TO 1 FOOT (305mm) BEYOND THE FRONT EDGE OF THE WATER FOUNTAIN AND SHALL EXTEND 1' (305mm) BEYOND EACH SIDE OF THE WATER FOUNTAIN, OR
   B. WING WALLS SHALL BE PROVIDED ON EACH SIDE OF THE WATER FOUNTAIN. THE WING WALLS SHALL PROJECT OUT FROM THE SUPPORTING WALL AT LEAST AS FAR AS THE WATER FOUNTAIN TO WITHIN 6" (152.4mm) OF THE SURFACE OF THE PATH TRAVEL. THERE SHALL ALSO BE A MINIMUM OF 32" (813mm) CLEAR BETWEEN THE WING WALLS.

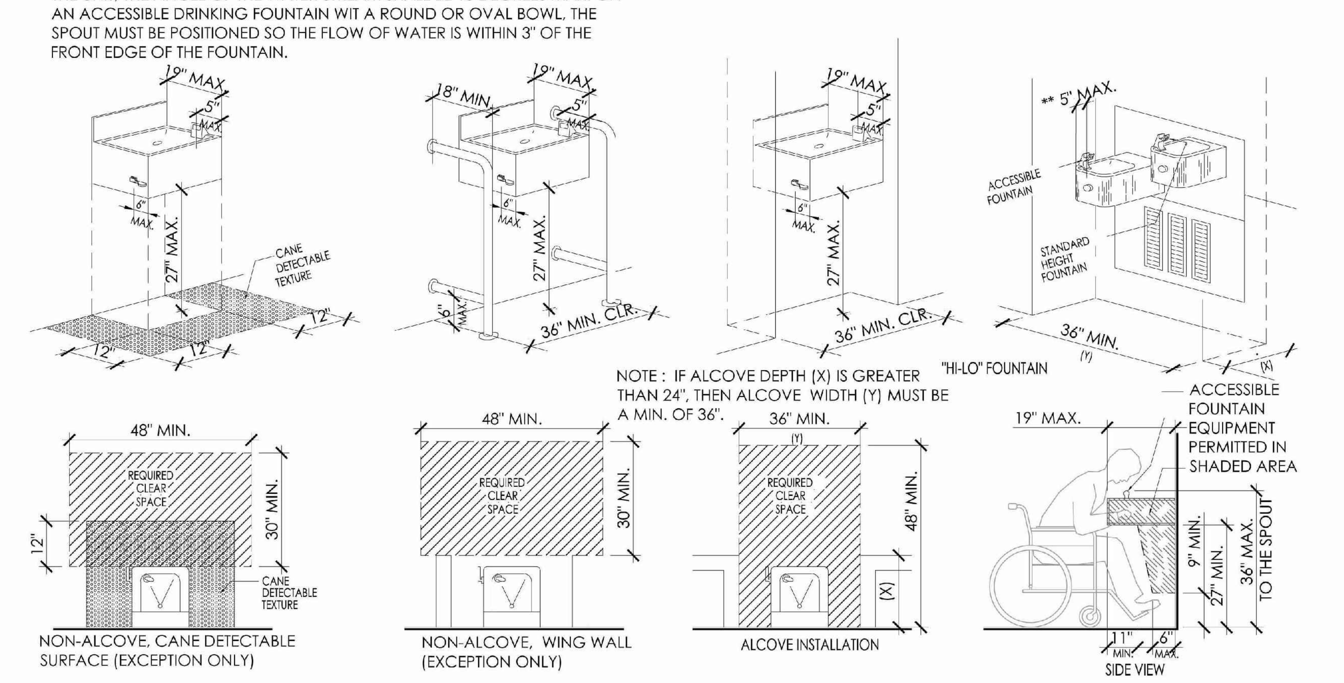

DRINKING FOUNTAIN 02-C-06 N.T.S. 2

HAZARDS & PROTRUDING OBJECTS.

1. OBJECTS PROJECTING FROM WALLS WITH THEIR LEADING EDGES BETWEEN 27" (686mm) AND 80" (2032mm) ABOVE THE FINISHED FLOOR SHALL PROTRUDE NO MORE THAN 4" (102mm) INTO WALKS, HALLS, CORRIDORS, PASSAGEWAYS, OR AISLES.
2. OBJECTS MOUNTED WITH THEIR LEADING EDGES AT OR BELOW 27" (686mm) ABOVE THE FINISHED FLOOR MAY PROTRUDE ANY AMOUNT INTO WALKS, HALLS, CORRIDORS, PASSAGEWAYS OR AISLES.
3. FREESTANDING OBJECTS MOUNTED ON POSTS / PYLONS MAY OVERHANG 12" (305mm) MAXIMUM FROM 27" (686mm) TO 80" (2032mm) ABOVE THE GROUND OR FINISHED FLOOR.
4. PROTRUDING OBJECTS SHALL NOT REDUCE THE REQUIRED CLEAR WIDTH OF AN ACCESSIBLE ROUTE OR MANEUVERING SPACE.
5. WALKS. HALLS, CORRIDORS, PASSAGEWAYS, AISLES OR OTHER CIRCULATION SPACES SHALL HAVE 80" (2032mm) MINIMUM CLEAR HEAD ROOM. ANY OBSTRUCTION THAT OVERHANGS A PEDESTRIAN WAY SHALL BE A MINIMUM OF 80" (2032mm) ABOVE THE WALKING SURFACE AS MEASURED FROM THE BOTTOM OF THE OBSTRUCTION.
6. WHEREVER SIGNS MOUNTED ON POSTS/PYLONS PROTRUDE FROM THE POSTS/PYLONS AND THE BOTTOM EDGE OF THE SIGN IS AT LEASS THAN 80" (2032mm) ABOVE THE FINISHED FLOOR OR GROUND LEVEL, THE EDGES OF SUCH SIGNS SHALL BE ROUNDED OR EASED AND THE CORNERS SHALL HAVE A MINIMUM RADIUS OF 0.125"
7. ABRUPT CHANGES IN LEVEL, EXCEPT BETWEEN A WALK OR SIDEWALK AND AN ADJACENT STREET OR DRIVEWAY, EXCEEDING 4" IN A VERTICAL DIMENSION, SUCH AS PLANTERS OR FOUNTAINS LOCATED IN OR ADJACENT TO WALKS, SIDEWALKS OR OTHER PEDESTRIAN WAYS SHALL BE IDENTIFIED BY WARNING CURBS PROJECTING AT LEAST 6" IN HEIGHT ABOVE THE WALK OR SIDEWALK SURFACE TO WARN THE BLIND OF A POTENTIAL DROPOFF.
8. WHEN A GUARDRAIL OR HANDRAIL IS PROVIDED, NO WARNING CURB IS REQUIRED WHEN A GUIDE RAIL IS PROVIDED CENTERED 3" +/- 1" ABOVE THE SURFACE OF THE WALK OR SIDEWALK, THE WALK IS 5% OR LESS GRADIENT, OR NO ADJACENT HAZARD EXISTS.
9. IF A WALKS CROSSES OR ADJOINS A VEHICULAR WAY, AND THE WALKING SURFACES ARE NOT SEPARATED BY CURBS, RAILINGS OR OTHER ELEMENTS BETWEEN THE PEDESTRIAN AREAS AND VEHICULAR AREAS, THE BOUNDARY BETWEEN THE AREAS SHALL BE DEFINED BY A CONTINUOUS DETECTABLE WARNING WHICH IS 36" WIDE, COMPLYING WITH SECTION 11B-247.1. ONLY APPROVED DSA/AC DETECTABLE WARNING PRODUCTS AND DIRECTIONAL SURFACES SHALL BE INSTALLED AS PROVIDED IN THE CALIFORNIA CODE OF REGULATIONS, TITLE 24, PART 1, ARTICLES 2, 3, AND 4.

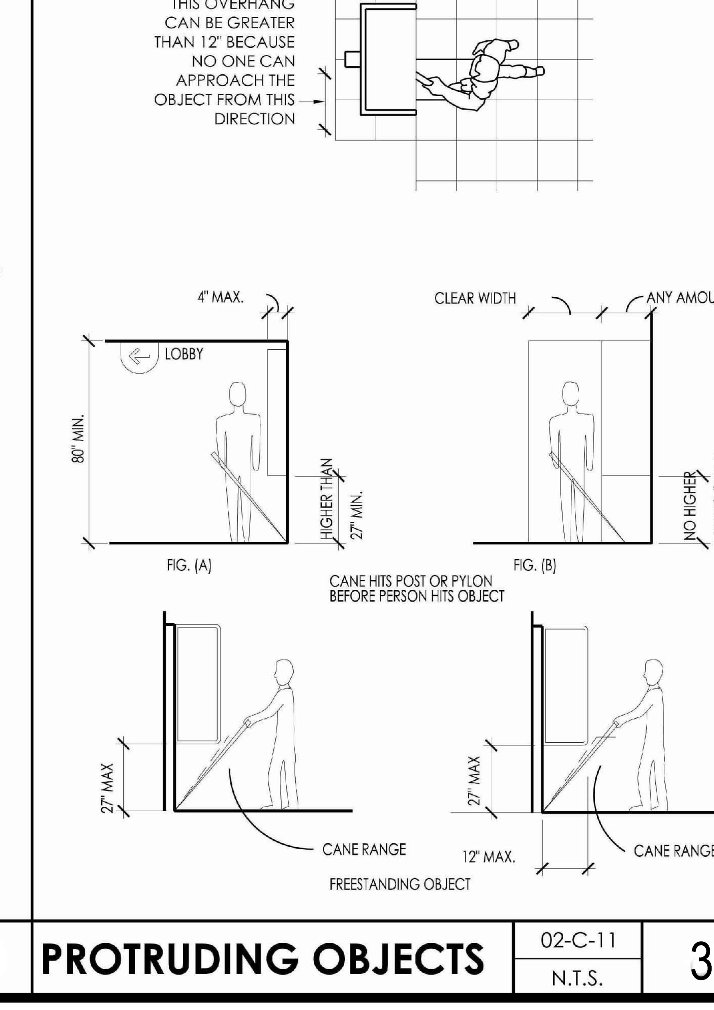

PROTRUDING OBJECTS 02-C-11 N.T.S. 3

CLEAR FLOOR SPACE FOR WHEELCHAIRS

1. MINIMUM CLEAR FLOOR OR GROUND SPACE REQUIRED TO ACCOMMODATE A SINGLE, STATIONARY WHEELCHAIR AND OCCUPANT IS 30" MIN. X 48" MIN. MINIMUM CLEAR FLOOR OR GROUND SPACE FOR WHEELCHAIRS MAY BE POSITIONED FOR FORWARD OR PARALLEL APPROACH TO AN OBJECT. CLEAR FLOOR OR GROUND SPACE FOR WHEELCHAIRS MAY BE PART OF THE KNEE SPACE REQUIRED UNDER SOME OBJECTS.
2. PROVIDE AN ADDITIONAL 12 INCHES WIDTH ON ONE SIDE FOR ALCOVES GREATER THAN 15 INCHES DEEP AND DESIGNED FOR SIDE APPROACH.
3. PROVIDE AN ADDITIONAL 6 INCHES WIDTH ON ONE SIDE FOR ALCOVES GREATER THAN 24 INCHES DEEP AND DESIGNED FOR FRONT APPROACH.
4. ONE FULL UNOBSTRUCTED SIDE OF A CLEAR FLOOR OR GROUND SPACE FOR A WHEELCHAIR SHALL ADJOIN OR OVERLAP AN ACCESSIBLE ROUTE OR ADJOIN ANOTHER WHEELCHAIR CLEAR FLOOR SPACE. IF A CLEAR FLOOR OR GROUND SPACE IS LOCATED IN AN ALCOVE OR OTHERWISE CONFINED ON ALL OR PART OF THREE SIDES, ADDITIONAL MANUVERING CLEARANCES SHALL BE PROVIDED.
5. THE SPACE REQUIRED FOR A WHEELCHAIR TO MAKE A 180 DEG. TURN IS A CLEAR SPACE OF 60" DIAMETER OR A T-SHAPED SPACE.
6. THE MINIMUM CLEAR WIDTH REQUIRED FOR A WHEEL CHAIR TO TURN AROUND AN OBSTRUCTION SHALL BE 36" MINIMUM WHERE THE OBSTRUCTION IS 48" OR MORE IN LENGTH AND 42" MINIMUM WHERE THE OBSTRUCTION IS LESS THAN 48" IN LENGTH.
7. THE MINIMUM CLEAR WIDTH FOR SINGLE WHEELCHAIR PASSAGE SHALL BE 32" AT A POINT (24" MAXIMUM LENGTH) AND 36" CONTINUOUSLY.
8. THE MINIMUM WIDTH FOR TWO WHEELCHAIRS TO PASS IS 60".
9. IF THE CLEAR FLOOR SPACE ONLY ALLOWS FORWARD APPROACH TO AN OBJECT, THE MAXIMUM HIGH FORWARD REACH ALLOWED SHALL BE 48". THE MINIMUM LOW REACH IS 15".
10. IF THE CLEAR FLOOR SPACE ALLOWS PARALLEL APPROACH BY A PERSON IN A WHEELCHAIR, THE MAXIMUM HIGH SIDE REACH ALLOWED SHALL BE 54" AND THE LOW REACH SHALL BE NO LESS THAN 9" ABOVE THE FLOOR.

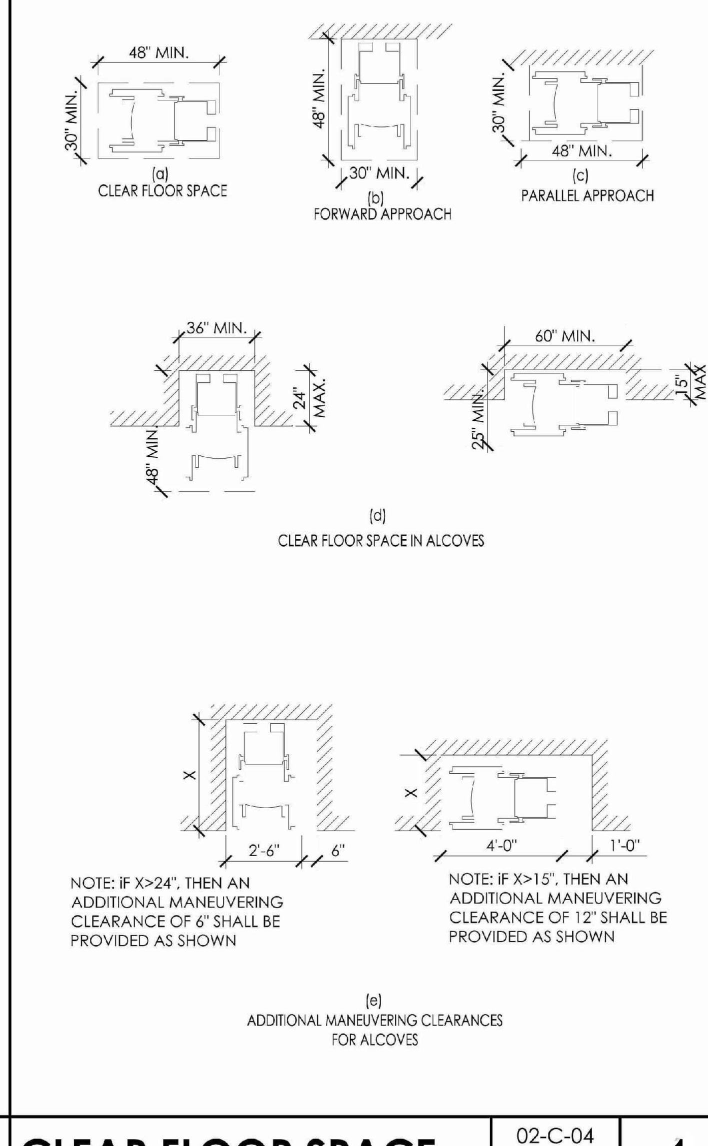

CLEAR FLOOR SPACE 02-C-04 N.T.S. 1

NO.	REVISIONS	DATE
1	DESIGN DEVELOPMENT PACKAGE	2/17/16
2	CONSTRUCTION DOCUMENT PACKAGE	3/18/16
3	PLAN CHECK SUBMITTAL	3/18/16

SAA ASSOCIATES
Architecture Development Management
SAA ASSOCIATES
P.O. BOX 93786,
PASADENA, CA 91109
T: 818-437-8452

PROJECT:
MADRONA MARSH NATURE CENTER IMPROVEMENTS

ADDRESS
3201 PLAZA DEL AMO BOULEVARD TORRANCE, CA 90503

DRAWING TITLE
GENERAL NOTES & ADA INFORMATION (SHEET 1)

PRINT DATE: 04/19/2016
PROJECT NUMBER: XXXX
APPLICATION NUMBER:
SHEET NUMBER
A001

F:\backup 1\MDU\SAA & Assoc\Madrona Marsh\CDs\mm-A001-Gen Notes_ADA_Sht-1.dwg 04/19/2016 00:56

GRAB BARS, TUB AND SHOWER SEATS, FASTENERS AND MOUNTING DEVICES.

1. GRAB BARS WHICH ARE LOCATED ON EACH SIDE, OR ON ONE SIDE AND THE BACK, OF THE ACCESSIBLE TOILET STALL OR COMPARTMENT SHALL BE SECURELY ATTACHED 33" (838mm) MIN. TO 36" (914mm) MAX. ABOVE FINISH FLOOR MEASURED TO THE TOP OF THE GRIPPING SURFACE. THE SPACE BETWEEN THE GRAB BAR AND PROJECTING OBJECTS ABOVE SHALL BE 12" MIN. GRAB BARS SHALL BE AT LEAST 42" (1067mm) IN LENGTH WITH THE FRONT END POSITIONED 24" (610mm) IN FRONT OF THE WATER CLOSET STOOL. GRAB BARS AT THE BACK SHALL NOT BE LESS THAN 36" (914mm) IN LENGTH.

2. THE DIAMETER OR WIDTH OF THE GRIPPING SURFACES OF A GRAB BAR SHALL BE 1¼" TO 2" (31.75mm TO 38.1mm). IF GRAB BARS ARE MOUNTED ADJACENT TO A WALL, THE SPACE BETWEEN THE WALL AND THE GRAB BARS SHALL BE 1½" (38.1mm).

3. THE STRUCTURAL STRENGTH OF GRAB BARS, TUB AND SHOWER SEATS, FASTENERS AND MOUNTING DEVICES SHALL MEET THE FOLLOWING SPECIFICATIONS:
   A. BENDING STRESS IN A GRAB BAR OR SEAT INDUCED BY THE MAXIMUM BENDING MOMENT FROM THE APPLICATION OF A 250-POUND (1112N) POINT LOAD SHALL BE LESS THAN THE ALLOWABLE STRESS FOR THE MATERIAL OF THE GRAB OR SEAT.
   B. SHEAR STRESS INDUCED IN A GRAB BAR OR SEAT BY THE APPLICATION OF A 250 POUND (1112N) POINT LOAD SHALL BE LESS THAN THE ALLOWABLE SHEAR STRESS FOR THE MATERIAL OF THE GRAB BAR OR SEAT, AND IF ITS MOUNTING BRACKET OR OTHER SUPPORT IS CONSIDERED TO BE FULLY RESTRAINED, THEN DIRECT AND TORTIONAL SHEAR STRESSES SHALL NOT EXCEED THE ALLOWABLE SHEAR STRESS.
   C. SHEAR FORCE INDUCED IN A FASTENER OR MOUNTING DEVICE FROM THE APPLICATION OF A 250 POUND (1112N) POINT LOAD SHALL BE LESS THAN THE ALLOWABLE LATERAL LOAD OF EITHER THE FASTENER OT MOUNTING DEVICE OR THE SUPPORTING STRUCTURE, WHICHEVER IS THE SMALLER ALLOWABLE LOAD.
   D. TENSILE FORCE INDUCED IN A FASTENER BY A DIRECT TENSION FORCE OF A 250 POUND (1112N) POINT LOAD, SHALL BE LESS THAN THE ALLOWABLE WITHDRAWAL LOAD BETWEEN THE FASTENER AND SUPPORTING STRUCTURE.
   E. GRAB BARDS SHALL NOT ROTATE WITHIN THEIR FITINGS.

4. A GRAB BAR AND ANY WALL OR OTHER SURFACE ADJACENT TO IS SHALL BE FREE OF ANY SHARP OR ABRASIVE ELEMENTS. EDGES SHALL HAVE A MINIMUM RADIUS OF ⅛" (3.17mm)

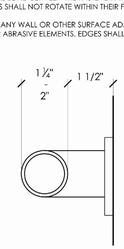

SIZE AND SPACING OF GRAB BARS

GRAB BARS

02-B-03	6
N.T.S.	

SINGLE-ACCOMODATION TOILET FACILITIES.

1. THERE SHALL BE SUFFICIENT SPACE IN THE TOILET ROOM FOR A WHEELCHAIR MEASURING 30" (762mm) WIDE BY 48" (1219mm) LONG TO ENTER THE ROOM AND PERMIT THE DOOR TO CLOSE. THERE SHALL BE IN THE ROOM A CLEAR FLOOR SPACE OF AT LEAST 60" (1524mm) IN DIAMETER, OR A T-SHAPED SPACE.

2. DOOR SHALL NOT ENCROACH INTO THE CLEAR FLOOR SPACE SPECIFIED IN ITEM 1 OF THIS SECTION BY MORE THAN 12" (305mm), EXCEPT FOT THE PANEL DOOR TO ANY WATER CLOSET COMPARTMENT.

3. THE WATER CLOSET SHALL BE LOCATED IN A SPACE WHICH PROVIDES A MINIMUM 28" WIDE (711mm) CLEAR SPACE FROM A FIXTURE OR A MINIMUM 32" WIDE (813) CLEAR SPACE FROM A WALL AT ONE SIDE. THE OTHER SIDE SHALL PROVIDE 18" [457mm] FROM THE CENTERLINE OF THE WATER CLOSET TO THE WALL. A MINIMUM 48" (1219mm) OF CLEAR SPACE SHALL BE PROVIDED IN FRONT OF THE WATER CLOSET.

4. GRAB BARS SHALL BE INSTALLED IN ACCORDANCE WITH SECTION 1127A.4

5. ALL DOORS, FIXTURES AND CONTROLS SHALL BE ON AN ACCESSIBLE ROUTE. THE MINIMUM CLEAR WIDTH OF AN ACCESSIBLE ROUTE SHALL BE 36" (914mm) EXCEPT AT DOORS. IF A PERSON IN A WHEELCHAIR MUST MAKE A TURNAROUND AN OBSTRUCTION, THE MINIMUM CLEAR WIDTH OF THE ACCESSIBLE ROUTE SHALL BE AS SHOWN BELOW.

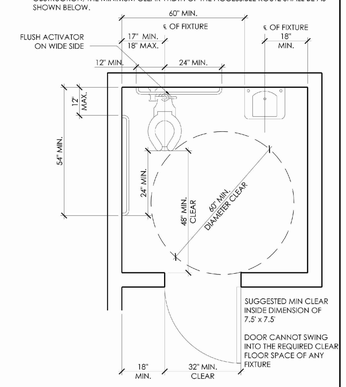

SINGLE TOILET ROOM

02-B-07	4
N.T.S.	

ACCESSIBLE LAVATORIES.

1. LAVATORIES SHALL BE INSTALLED WITH THE CENTERLINE OF THE FIXTURE A MINIMUM OF 18" (457mm) HORIZONTALLY FROM AN ADJOINING WALL OR FIXTURE. THE TOP OF THE FIXTURE RIM SHALL BE A MAXIMUM OF 34" (864mm) ABOVE THE FINISHED FLOOR.

2. A CLEAR MANEUVERING SPAVE AT LEAST 30" x 48" (762mm x 1219mm) SHALL BE PROVIDED IN FRONT OF ACCESSIBLE LAVATORIES TO ALLOW FORWARD APPROACH. SUCH CLEAR GLOOR SPACE SHALL ADJOIN OR OVERLAP AN ACCESSIBLE ROUTE AND SHALL NOT EXTEND INTO THE KNEE AND TOE SPACE UNDERNEATH THE LAVATORY MORE THAN 19" (482mm). THIS CLEAR SPACE COMPLY WITH SECTION 1127A.9.5 FOR ALLOWABLE REACH RANGES.

3. KNEE AND TOE SPACE SHALL BE PROVIDED AS FOLLOWS:
   A. THE KNEE SPACE SHALL BE AT LEAST 30" (762mm) WIDE AND 8" DEEP (203.2mm)
   B. THE KNEE SPAVE SHALL BE AT LEAST 29" (737mm) HIGH AT THE FRONT FACE AND REDUCING TO NOT LESS THAN 27" (686mm) AT A POINT 8" (203.2mm) BACK FROM THE FRONT EDGE.
   C. KNEE SPACE REQUIRED SHALL BE CLEAR AND UNOBSTRUCTED.
   D. THE TOE SPACE REQUIRED IN THIS SECTION SHALL BE PROVIDED AS FOLLOWS:
      - SHALL BE AT LEAST 30" (762mm) WIDE AND CENTERED IN THE LAVATORY.
      - SHALL BE AT LEAST 17" (432mm) DEEP, MEASURED FROM THE FRONT EDGE.
      - SHALL BE AT LEAST 9" (228.6mm) HIGH FROM THE FLOOR.

4. THE FINISHED FLOOR BENEATH THE LAVATORY SHALL BE EXTENDED TO THE WALL.

5. HOT WATER AND DRAIN PIPES ACCESSIBLE UNDER LAVATORIES SHALL BE INSULATED OR OTHERWISE COVERED. THERE SHALL BE NO SHARP OR ABRASIVE SURFACES UNDER LAVATORIES. LAVATORY HOT WATER PIPE & DRAIN INSULATION SHALL BE TRUEBRO LAV GUARD 2 UNDERSINK PIPING COVER AS MANUFACTURED BY IPS CORP.

6. FAUCET CONTROLS AND OPERATION MECHANISMS SHALL BE OPERABLE WITH ONE HAND AND SHALL NOT REQUIRE TIGHT GRASPING, PINCHING OR TWISTING OF THE WRIST.

THE FORCE REQUIRED TO ACTIVATE CONTROLS SHALL BE NO GREATER THAN 5 POUND-FORCE (lbf) (22.2N). LEVER OPERATED, PUSH TYPE AND ELECTRONICALLY CONTROLLED MECHANISMS ARE EXAMPLES OF ACCEPTABLE DESIGNS. SELF-CLOSING VALVES ARE ALLOWED IF THE FAUCET REMAINS OPEN FOR AT LEAST 10 SECONDS.

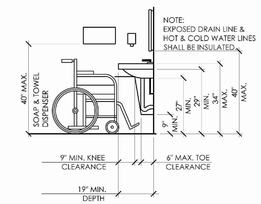

LAVATORY CLEARANCES

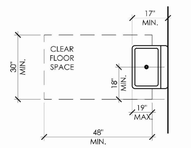

CLEAR FLOOR SPACE AT LAVATORY

LAVATORIES

02-B-04	2
N.T.S.	

ACCESSIBLE URINALS

1. URINALS SHALL BE FLOOR MOUNTED OR WALL HUNG. WHERE ONE OR MORE WALL-HUNG URINALS ARE PROVIDED, AT LEAST ONE WITH A RIM PROJECTING A MINIMUM OF 14" (356mm) TO A MAXIMUM OF 17" (432mm) FROM THE WALL AND A MAXIMUM OF 17" (432mm) ABOVE THE FLOOR SHALL BE PROVIDED.

2. FLUSH CONTROLS SHALL BE OPERABLE WITH ONE HAND, SHALL NOT REQUIRE TIGHT GRASPING, PINCHING, OR TWISTING OF THE WRIST AND SHALL BE MOUNTED NO MORE THAN 44" (1118mm) ABOVE THE FLOOR. THE FORCE REQUIRED TO ACTIVATE CONTROLS SHALL BE NO GREATER THAN 5 POUND-FORCE (lbf) (22.2N). ELECTRONIC AUTOMATIC FLUSHING CONTROLS ARE ACCEPTABLE AND PREFERABLE.

3. WHERE URINALS ARE PROVIDED, AT LEAST ONE SHALL HAVE A CLEAR FLOOR SPACE 30" x 48" (762mm x 1219mm) IN FRONT OF THE URINAL TO ALLOW FORWARD APPROACH. THIS CLEAR SPACE SHALL COMPLY WITH SECTIONS 1127A.9.4 AND 1127A.5

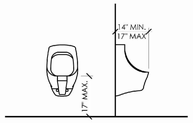

URINALS

02-B-08	8
N.T.S.	

SIGNS

1. GENERAL. ALL ACCESSIBLE SANITARY FACILITIES SHALL BE IDENTIFIED BY THE "INTERNATIONAL SYMBOL OF ACCESSIBILITY." SIGNS NEED NOT BE PROVIDED FOR FACILITIES WITHIN A DWELLING UNIT OR GUESTROOM.

2. IDENTIFICATION SYMBOLS, DOORWAYS LEADING TO SANITARY FACILITIES SHALL BE IDENTIFIED BY A GEOMETRIC SYMBOL IN COMPLIANCE. GEOMETRIC SYMBOL SHALL BE CENTERED HORIZONTALLY ON THE FLOOR AT A HEIGHT OF 58" TO 60" ABOVE THE FINISH FLOOR OR GROUND SURFACE MEASURED TO THE CENTER OF THE SYMBOL. EDGES OF ACCESSIBILITY SIGNAGE SHALL BE ROUNDED, CHAMFERED OR EASED. CORNERS SHALL HAVE A MINIMUM RADIUS OF ⅛" (3.2mm). SEE SECTION 11B-703. FOR ADDITIONAL SIGNAGE REQUIREMENTS APPLICABLE TO SANITARY FACILITIES.

3. MEN'S SANITARY FACILITIES SHALL BE IDENTIFIED BY AND EQUILATERAL TRIANGLE ⅛" THICK (6.4mm) WITH EDGES 12" (305mm) LONG AND A VERTEX POINTING UPWARD. THE TRIANGLE SYMBOL SHALL CONTRAST WITH THE DOOR, EITHER LIGHT ON A DARK BACKGROUND OR DARK ON A LIGHT BACKGROUND.

4. WOMEN'S SANITARY FACILITIES SHALL BE IDENTIFIED BY A CIRCLE, ⅛" THICK (6.4mm), 12" (305mm) IN DIAMETER WITH A ⅛" THICK (6.4mm). THE CIRCLE SYMBOL SHALL CONTRAST WITH THE DOOR, EITHER LIGHT ON A DARK BACKGROUND OR DARK ON A LIGHT BACKGROUND.

5. UNISEX SANITARY FACILITIES SHALL BE IDENTIFIED BY A CIRCLE, ⅛" (6.4mm) THICK AND 12" (305mm) IN DIAMETER WITH A ⅛" (6.4mm) THICK TRIANGLE SUPERIMPOSED ON THE CIRCLE AND WITHIN THE 12" (305mm) DIAMETER. THE TRIANGLE SYMBOL SHALL CONTRAST WITH THE CIRCLE SYMBOL, EITHER LIGHT ON A DARK BACKGROUND OR DARK ON A LIGHT BACKGROUND. THE CIRCLE SYMBOL SHALL CONTRAST WITH THE DOOR, EITHER LIGHT ON A DARK BACKGROUND OR LIGHT ON A DARK BACKGROUND.

6. THESE ARE MINIMUM STANDARDS FOR THESE SIGNS. SIGNS ARE REQUIRED TO BE MTD. BOTH CENTERED ON THE DOOR INTO THE REST ROOM AND ON THE WALL ADJACENT TO THE LATCH SIDE OF THE DOOR.

7. LETTERS AND NUMBERALS SHALL BE RAISED 1.32" UPPER CASE SANS SERIF OR SIMPLE SERIF TYPE.

8. BRAILLE RAISED CHARACTERS SHALL BE AT LEAST 5/8" HIGH, BUT NO HIGHER THAN 2"

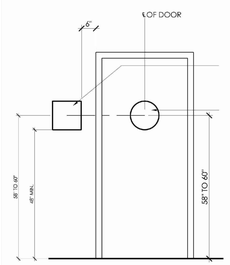

SIGNAGE LOCATION

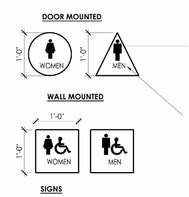

SIGNAGE

02-B-06	5
N.T.S.	

WATER CLOSETS.

1. THE HEIGHT OF ACCESSIBLE WATER CLOSETS SHALL BE A MINIMUM OF 17" (432mm) TO A MAXIMUM OF 19" (483mm) MEASURED TO THE TOP OF A MAXIMUM 2" HIGH (50.8mm) TOILET SEAT.

2. CONTROLS SHALL BE OPERABLE WITH ONE HAND AND SHALL NOT REQUIRE TIGHT GRASPING, PINCHING, OR TWISTING. CONTROLS FOR THE FLUSH VALVES SHALL BE MOUNTED ON THE WIDE SIDE OF TOILET AREAS, NO MORE THAN 44" (1118mm) ABOVE THE FLOOR. THE FORCE REQUIRED TO ACTIVATE CONTROLS SHALL BE NO GREATER THAN 5 POUND-FORCE (lbf) (22.2N)

3. SEATS SHALL NOT BE SPRUNG TO RETURN TO A LIFTED POSITION.

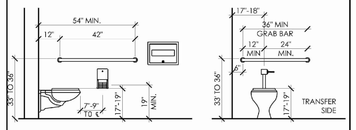

ACCESSIBLE WATER CLOSET

02-B-09	3
N.T.S.	

TOILET ROOM FIXTURES AND ACCESSORIES.

1. WHERE TOWEL, SANITARY NAPKINS, WASTE RECEPTACLES AND OTHER SIMILAR DISPENSING AND DISPOSAL FIXTURES ARE PROVIDED, AT LEAST ON OF EACH TYPE SHALL BE LOCATED WITH ALL OPERABLE PARTS, INCLUDING COIN SLOTS WITHING 40" (1016mm) FROM THE FINISHED FLOOR, CONTROLS AND OPERATING MECHANISMS SHALL BE OPERABLE WITH ONE HAND AND SHALL NOT REQUIRE TIGHT GRASPING, PINCHING OR TWISTING OF THE WRIST.

2. THE FORCE REQUIRED TO ACTIVATE CONTROLS SHALL BE NO GREATER THAN 5 POUNDS (22.2N) OF FORCE.

3. TOILET TISSUE DISPENSERS SHALL BE LOCATED ON THE WALL 7" MIN. AND 9" MAX. IN FRONT OF THE WATER CLOSET MEASURED TO THE CENTERLINE OF THE DISPENSER. MOUNTED BELOW THE GRAB BAR. DISPENSERS THAT CONTROL DELIVERY OR THAT DO NOT PERMIT CONTINUOUS PAPER FLOW SHALL NOT BE USED.

4. WHERE MIRRORS ARE PROVIDED, AT LEAST ONE SHALL BE ACCESSIBLE. MIRRORS SHALL BE MOUNTED WITH THE BOTTOM EDGE NO HIGHER THAN 40" (1016mm) FROM THE FLOOR.

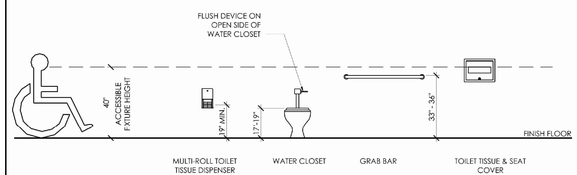

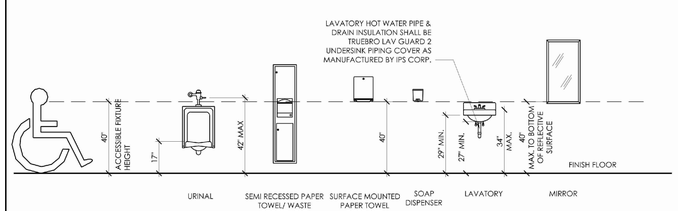

FIXTURES AND ACCESSORIES

02-B-02	7
N.T.S.	

MULTIPLE ACCOMMODATION TOILET FACILITIES

1. A CLEAR SPACE, MEASURED FROM THE FLOOR TO A HEIGHT OF 27" (686mm) ABOVE THE FLOOR, WITHIN THE SANITARY FACILITY ROOM, OF SUFFICIENT SIZE TO INSCRIBE A CIRCLE OF A DIAMETER NOT LESS THAN 60" (1524mm), OR A CLEAR SPACE NOT LESS THAN 56" X 63" (1422mm x 1600mm) IN SIZE. OTHER THAN THE DOOR TO THE ACCESSIBLE WATER CLOSET COMPARTMENT, A DOOR, IN ANY POSITION, MAY ENCROACH INTO THIS SPACE BY NOT MORE THAN 12" (305mm).

2. DOORS SHALL NOT SWING INTO THE FLOOR SPACE REQUIRED FOR ANY FIXTURE.

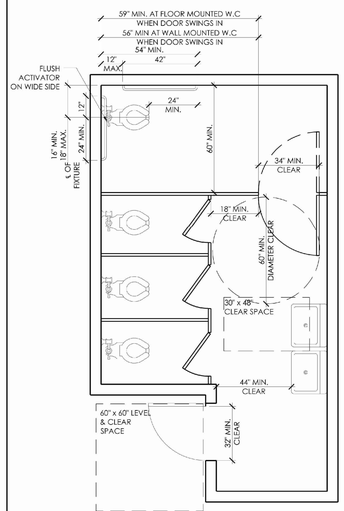

3. A WATER CLOSET FIXTURE LOCATED IN A COMPARTMENT SHALL PROVIDE A MINIMUM 28" WIDE (711mm) CLEAR SPACE FROM A FIXTURE, OR A MINIMUM 32" WIDE (813mm) CLEAR SPACE FROM A WALL AT ONE SIDE OF THE WATER CLOSET. THE OTHER SIDE OF THE WATER CLOSET SHALL PROVIDE 18" (457mm) FROM THE CENTERLINE OF THE WATER CLOSET TO THE WALL. THE STALL SHALL BE A MINIMUM OF 60" (1524mm) WIDE. A MINIMUM 48" LONG (1219mm) CLEAR SPACE SHALL BE PROVIDED IN FRONT OF THE WATER CLOSET IF THE COMPARTMENT HAS AN END-OPENING DOOR (FACING THE WATER CLOSET). A MINIMUM 60" LONG (1524mm) CLEAR SPAVE SHALL BE PROVIDED IN A COMPARTMENT WITH THE DOOR LOCATED AT THE SIDE.

4. GRAB BARS SHALL BE INSTALLED IN ACCORDANCE WITH SECTION 11B-609.

5. COMPARTMENT DOORS SHALL COMPLY WITH THE FOLLOWING:
   A. THE WATER CLOSET COMPARTMENT SHALL BE EQUIPPED WITH A DOOR THAT HAS AN AUTOMATIC-CLOSING DEVICE, AND SHALL HAVE A CLEAR, UNOBSTRUCTED OPENING WIDTH OF 32" (813mm) WHEN LOCATED AT THE END AND 34" (864mm) WHEN LOCATED AT THE SIDE WITH THE DOOR POSITIONED AT AN ANGLE OF 90° FROM ITS CLOSED POSITION.
   B. WHEN STANDARD COMPARTMENT DOORS ARE USED, WITH A MINIMUM 9" (228.6mm) CLEARANCE FOR FOOTREST UNDERNEATH AND A SELF-CLOSING DEVICE. CLEARANCE AT THE SRIKE EDGE AS SPECIFIED IN SECTION 1126A.3.2. IS NOT REQUIRED.
   C. THE INSIDE AND OUTSIDE OF THE COMPARTMENT DOOR SHALL BE EQUIPPED WITH A LOOP OR U-SHAPED HANDLE IMMEDIATELY BELOW THE LATCH. THE LATCH SHALL BE FLIP-OVER STYLE, SLIDING OR OTHER HARDWARE NOT REQUIRING THE USER TO GRASP OR TWIST.
   D. EXCEPT FOR DOOR-OPENING WIDTHS AND DOOR SWINGS, A CLEAR UNOBSTRUCTED ACCESS OF NOT LESS THAN 44" (1118mm) SHALL BE PROVIDED TO WATER CLOSET COMPARTMENTS DESIGNED FOR USE BY PERSONS WITH DISABILITIES. THE SPACE IMMEDIATELY IN FRONT OF A WATER CLOSET COMPARTMENT SHALL NOT BE LESS THAN 48" (1219mm) AS MEASURED AT RIGHT ANGLES TO COMPARTMENT DOOR IN ITS CLOSED POSITION.

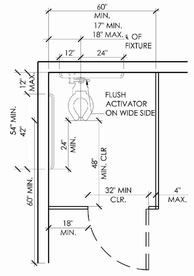

MULTIPLE TOILETS

02-B-05	1
N.T.S.	

NO.	REVISIONS	DATE
1	DESIGN DEVELOPMENT PACKAGE	2/17/16
2	CONSTRUCTION DOCUMENT PACKAGE	3/18/16
3	PLAN CHECK SUBMITTAL	3/18/16

SAA ASSOCIATES
Architecture Development Management
SAA ASSOCIATES
P.O. BOX 93786,
PASADENA, CA 91109
T: 818-437-8452

PROJECT:
MADRONA MARSH NATURE CENTER IMPROVEMENTS

ADDRESS
3201 PLAZA DEL AMO BOULEVARD TORRANCE, CA 90503

DRAWING TITLE
ADA INFORMATION (SHEET 2)

PRINT DATE: 04/19/2016

PROJECT NUMBER: XXXX

APPLICATION NUMBER:

SHEET NUMBER
A002

F:\Backup 1\MDU\SAA & Assoc\Madrona Marsh\CD\mm-A002-ADA_Sht-2.dwg 04/19/2016 00:55

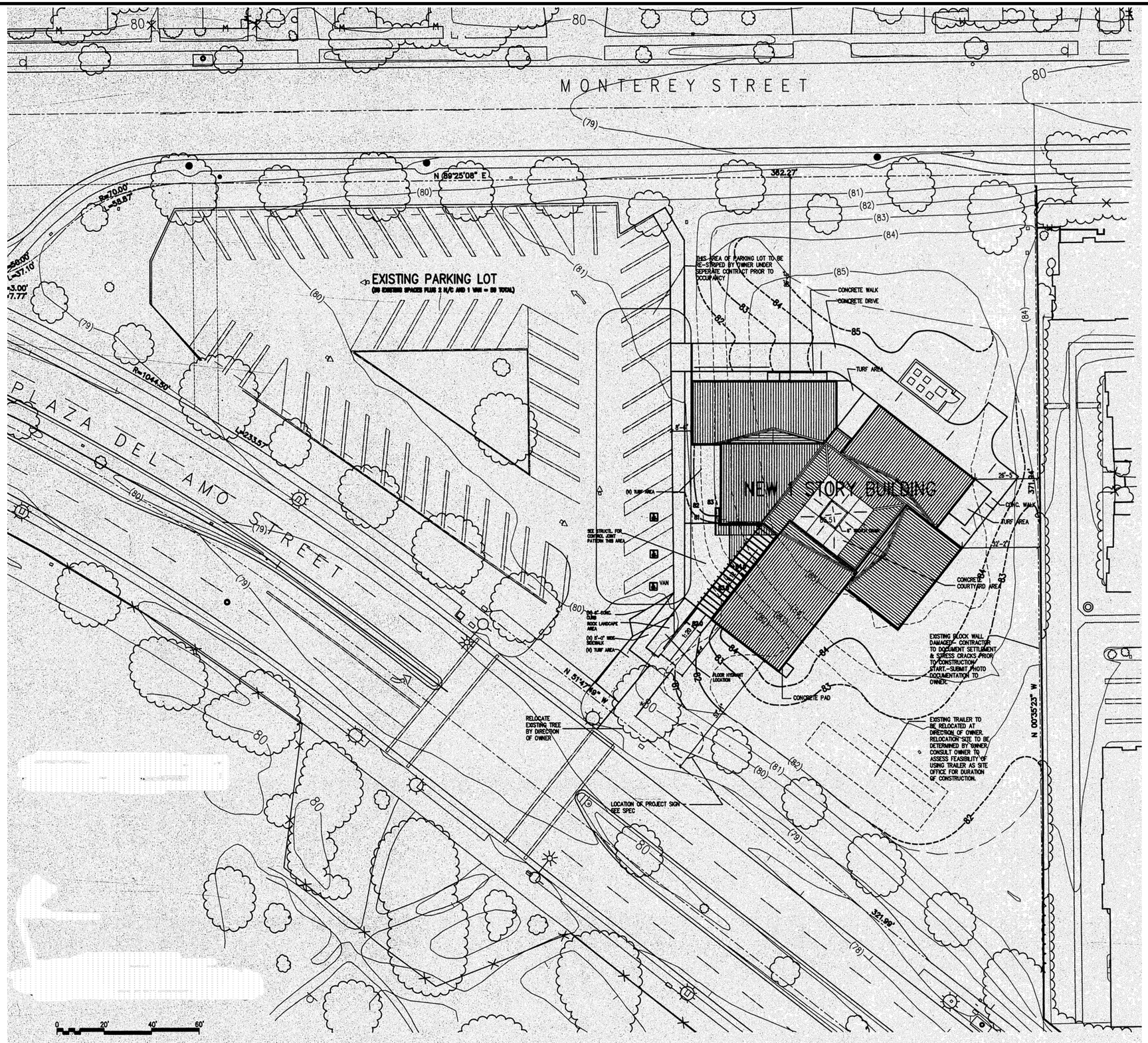

1 PARTIAL SITE PLAN
SCALE: 1" = 20'-0"

TRUE NORTH

REFERENCE NORTH

FOR REFERENCE ONLY

NO.	REVISIONS	DATE
1	DESIGN DEVELOPMENT PACKAGE	2/17/16
2	CONSTRUCTION DOCUMENT PACKAGE	3/18/16
3	PLAN CHECK SUBMITTAL	3/18/16

LICENSED ARCHITECT
CHRISTOPHER A. SAA
C-17777
STATE OF CALIFORNIA

SAA ASSOCIATES
Architecture Development Management
SAA ASSOCIATES
P.O. BOX 93786,
PASADENA, CA 91109
T: 818-437-8452

PROJECT:
MADRONA MARSH NATURE CENTER IMPROVEMENTS

ADDRESS:
3201 PLAZA DEL AMO BOULEVARD TORRANCE, CA 90503

DRAWING TITLE:
EXISTING SITE PLAN
(FOR REFERENCE ONLY)

PRINT DATE: 04/19/2016

PROJECT NUMBER: XXXX

APPLICATION NUMBER:

SHEET NUMBER: A100

F:\backup 15\DD\SAA & Assoc\Madrona Marsh\CD's\mm-A100-Site Plan2.dwg 04/19/2016 01:42

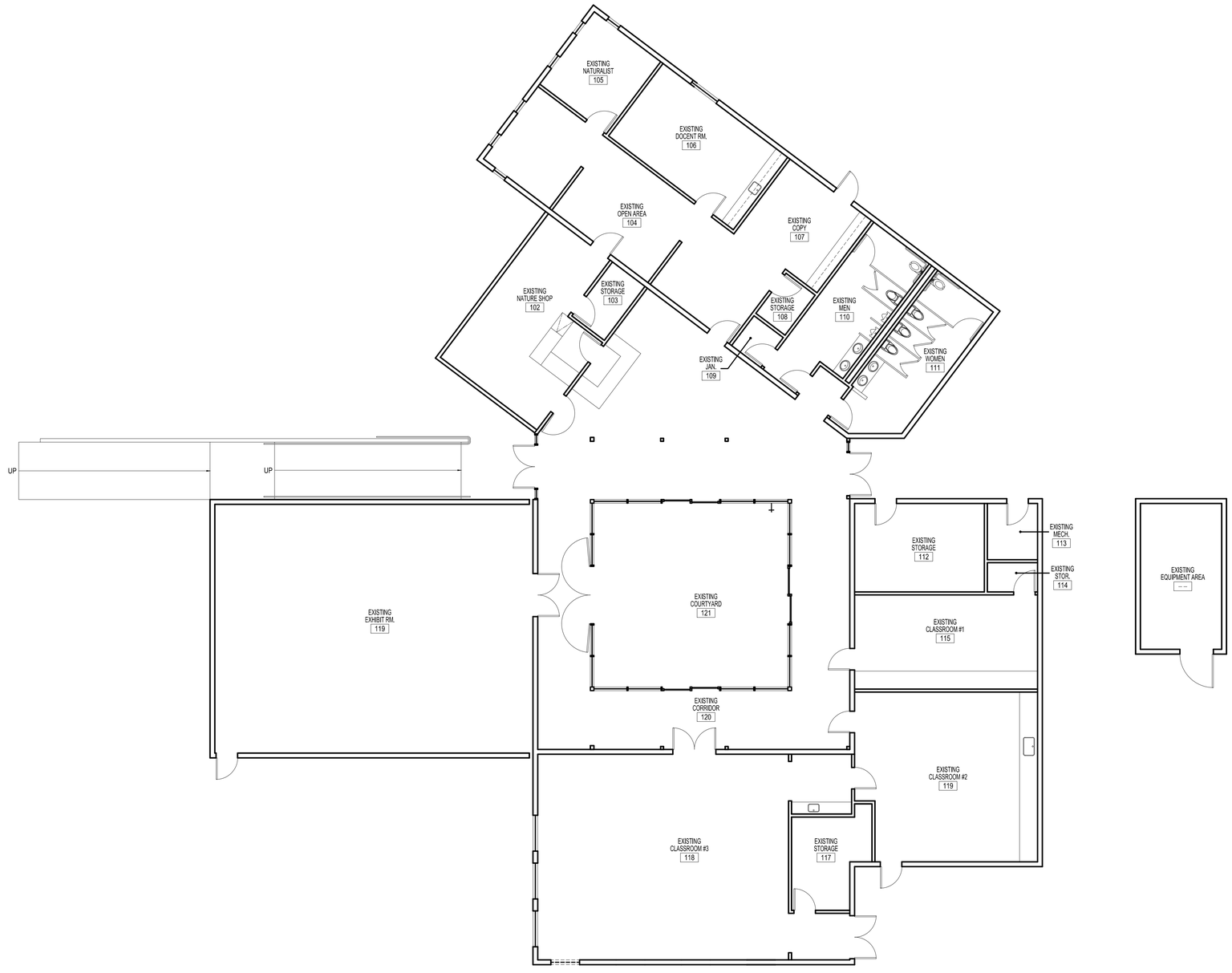

1 EXISTING OVERALL FLOOR PLAN
SCALE: 1/8" = 1'-0"

TRUE NORTH

REFERENCE NORTH

FOR REFERENCE ONLY

NO.	REVISIONS	DATE
1	DESIGN DEVELOPMENT PACKAGE	2/17/16
2	CONSTRUCTION DOCUMENT PACKAGE	3/18/16
3	PLAN CHECK SUBMITTAL	3/18/16

LICENSED ARCHITECT
CHRISTY WEAVER
C-35877
STATE OF CALIFORNIA

SAA ASSOCIATES
Architecture Development Management

SAA ASSOCIATES
P.O. BOX 93786,
PASADENA, CA 91109
T: 818-437-8452

PROJECT:
MADRONA MARSH NATURE CENTER IMPROVEMENTS

ADDRESS:
3201 PLAZA DEL AMO BOULEVARD TORRANCE, CA 90503

DRAWING TITLE:
OVERALL FLOOR PLAN (FOR REFERENCE ONLY)

PRINT DATE: 04/19/2016

PROJECT NUMBER: XXXX

APPLICATION NUMBER:

SHEET NUMBER: A101

F:\backup 1\MDU\SAA & Assoc\Madrona Marsh\CDs\mm-A101-Overall Floor Plan.dwg 04/19/2016 01:01

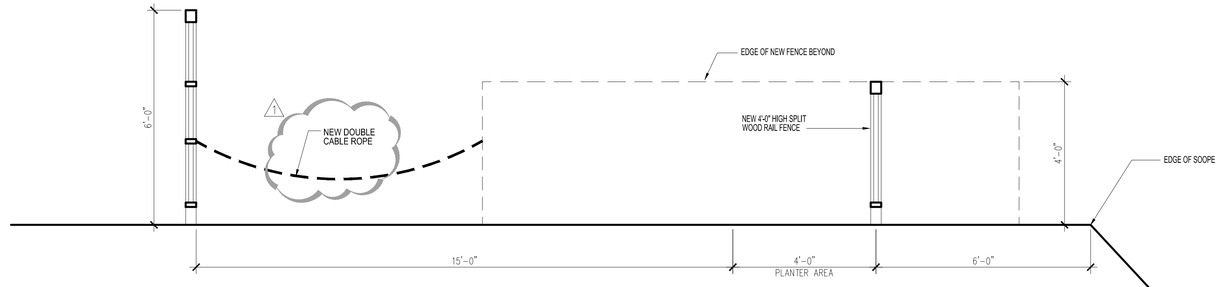

2 SECTION THROUGH OBSERVATION AREA
SCALE: 1/2" = 1'-0"

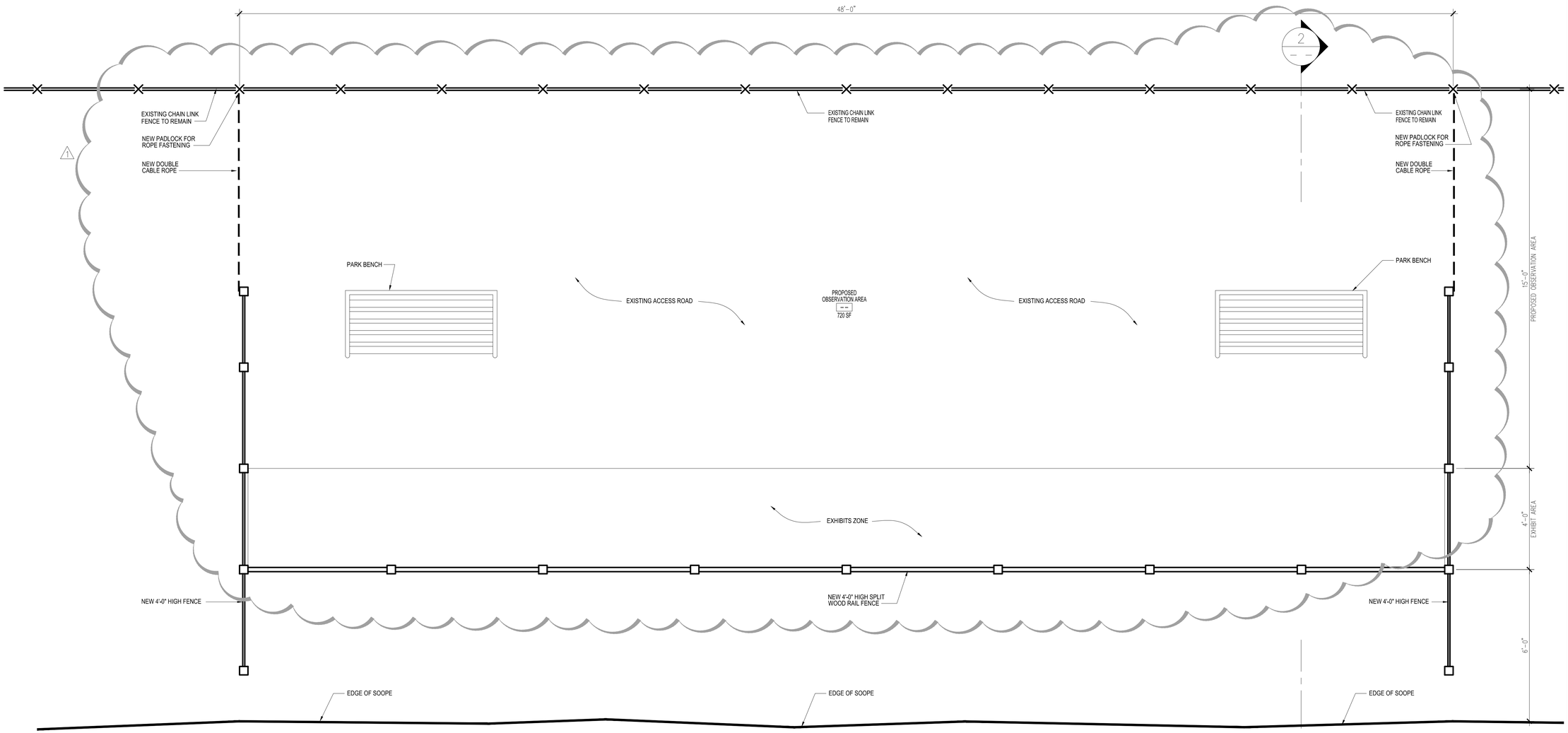

1 PARTIAL OBSERVATION AREA PLAN
SCALE: 1/2" = 1'-0"

NORTH

NO.	REVISIONS	DATE
1	DESIGN DEVELOPMENT PACKAGE	2/17/16
2	CONSTRUCTION DOCUMENT PACKAGE	3/18/16
3	PLAN CHECK SUBMITTAL	3/18/16
4	PLAN CHECK CORRECTION #1	04/11/16

SAA ASSOCIATES
Architecture Development Management
SAA ASSOCIATES
P.O. BOX 93786,
PASADENA, CA 91109
T: 818-437-8452

PROJECT:
MADRONA MARSH NATURE CENTER IMPROVEMENTS

ADDRESS:
3201 PLAZA DEL AMO BOULEVARD TORRANCE, CA 90503

DRAWING TITLE
PARTIAL OBSERVATION AREA PLAN & DETAILS

PRINT DATE: 04/19/2016
PROJECT NUMBER: XXXX
APPLICATION NUMBER:
SHEET NUMBER
A201

F:\backup 1\MDU\SAA & Assoc\Madrona Marsh\CDs\mm-A201-OBSERVATION AREA Plan_Details.dwg 04/19/2016 01:03

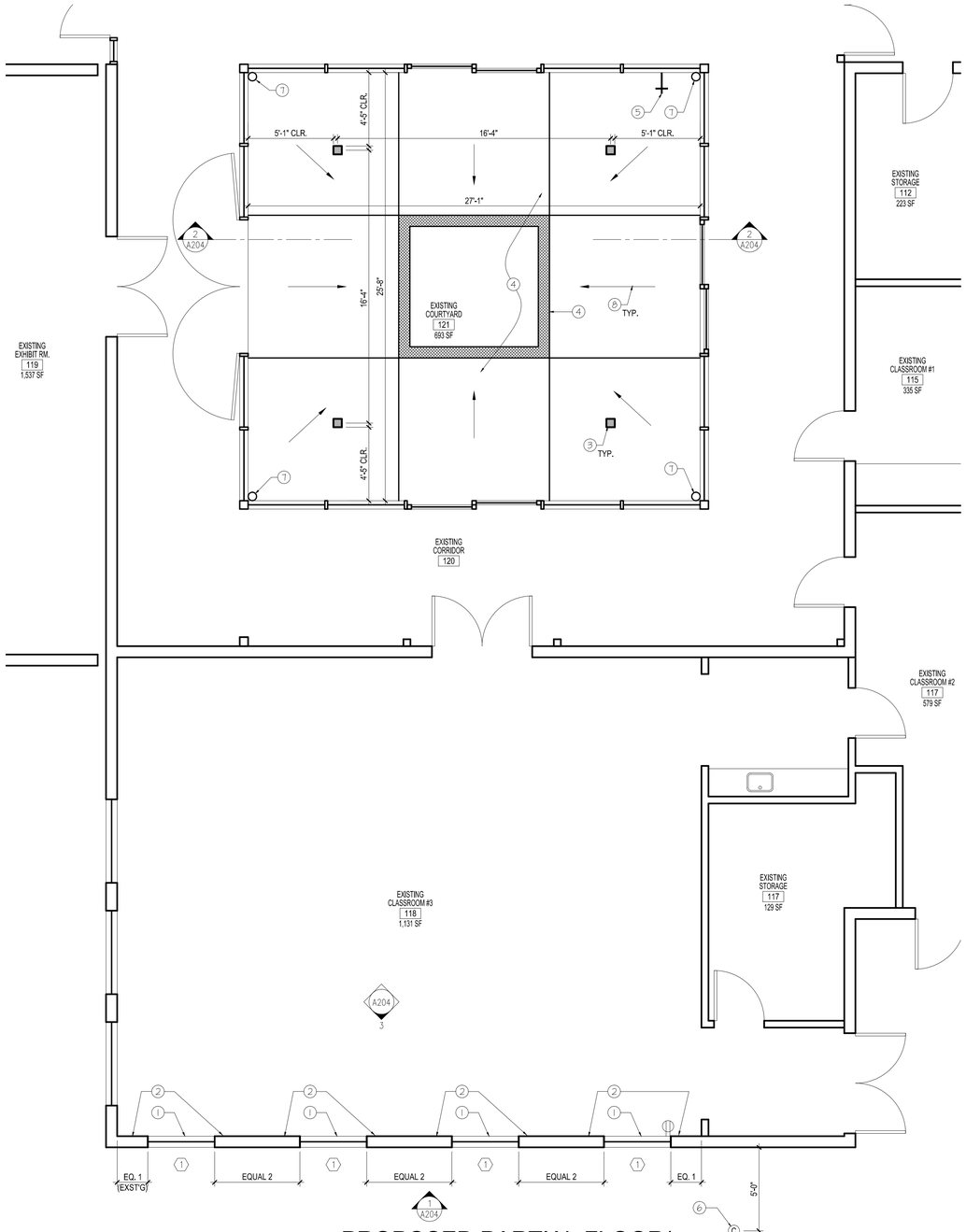

2 PROPOSED PARTIAL FLOOR/ POWER & COMMUNICATION PLAN

SCALE: 1/4" = 1'-0"

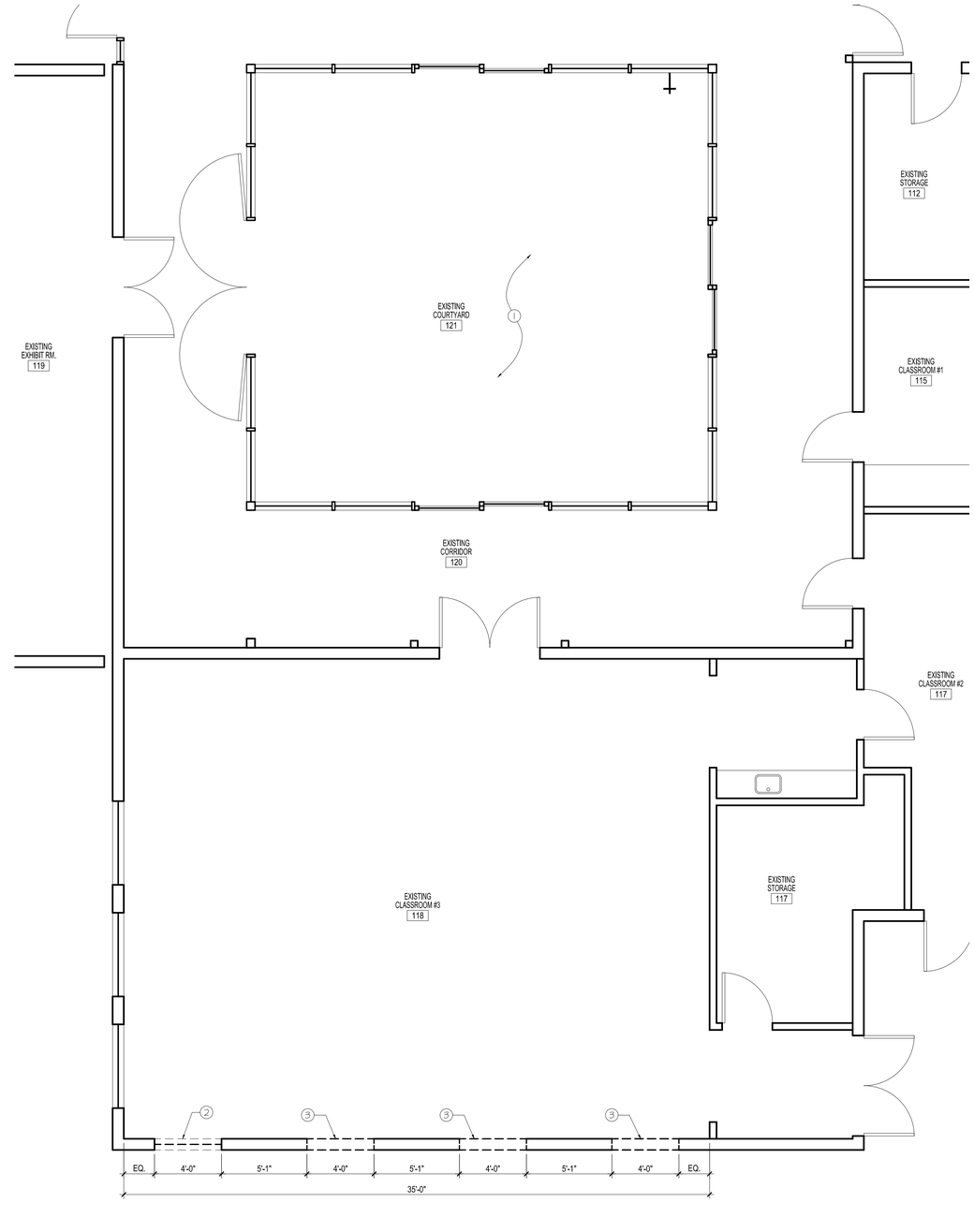

1 PARTIAL DEMOLITION PLAN

SCALE: 1/4" = 1'-0"

CONSTRUCTION NOTES

1. NEW PULP STUDIO REF SWITCHLITE WINDOW - 1" IGU WITH SOLAR BAN 60
2. PATCH/REPAIR/PAINT EXISTING WALL TO MATCH EXISTING
3. NEW STRUCTURAL COLUMN, TYPICAL - SEE STRUCTURAL DWG.'S
4. PROVIDE A NEW CONCRETE SLAB AND DRAIN AT EXISTING COURTYARD. CONCRETE SLAB SHALL HAVE MEDIUM BROOM FINISH WITH COLOR TO BE SELECTED BY OWNER.
5. NEW WATER SOURCE AND HOSE BIB FAUCET TO BE PROVIDED BY OWNER. CONTRACTOR TO COORDINATE LOCATION WITH THE OWNER.
6. NEW CONDUIT - SEE ELECTRICAL DWG'S.
7. NEW 6" DOWNSPOUT AT ALL 4 CORNERS OF COURTYARD
8. DIRECTION OF NW SLAB SLOPE, TYP.

DEMOLITION NOTES

1. REMOVE EXISTING CONCRETE SLAB AND DRAINS IN THE ENTIRE COURTYARD AREA. PROTECT EXISTING GRADE BEAMS, UNDER-GROUND UTILITIES AND CLEAN OUT DURING THE IMPLIMENTATION OR WORK. PERFORM FIELD VERIFICATION OF EXISTING CONDITIONS PRIOR TO THE IMPLEMENTATION OF WORK AND NOTIFY THE ARCHITECT OF ANY DISCREPANCIES OR CONFLICTS FOR CLARIFICATIONS PRIOR TO THE COMMENCEMENT OF WORK
2. EXISTING WINDOW TO BE REMOVED
3. AREA OF EXISTING WALL TO BE DEMOLISHED FOR NEW WINDOW. PATCH/REPAIR EXTERIOR STUCCO TO MATCH EXISTING. PATCH/REPAIR/PAINT INTERIOR DRYWALL TO MATCH EXISTING.

LEGEND

- EXISTING WALL TO REMAIN
- EXISTING WINDOW TO REMAIN
- EXISTING WINDOW TO BE DEMOLISHED
- NEW WINDOW

NO.	REVISIONS	DATE
1	DESIGN DEVELOPMENT PACKAGE	2/17/16
2	CONSTRUCTION DOCUMENT PACKAGE	3/18/16
3	PLAN CHECK SUBMITTAL	3/18/16
4	PLAN CHECK CORRECTION #1	04/11/16

SAA ASSOCIATES
Architecture Development Management
SAA ASSOCIATES
P.O. BOX 93786,
PASADENA, CA 91109
T: 818-437-8452

PROJECT:
MADRONA MARSH NATURE CENTER IMPROVEMENTS

ADDRESS:
3201 PLAZA DEL AMO BOULEVARD TORRANCE, CA 90503

DRAWING TITLE
PARTIAL DEMOLITION PLAN & PARTIAL FLOOR PLAN

PRINT DATE: 04/19/2016

PROJECT NUMBER: XXXX

APPLICATION NUMBER:

SHEET NUMBER
A202

P:\backup 1\MDJ\SAA & Assoc\Madrona Marsh\Cdesrm\A202-DEMO-CONSTRUCTION Plans.dwg 04/19/2016 01:04

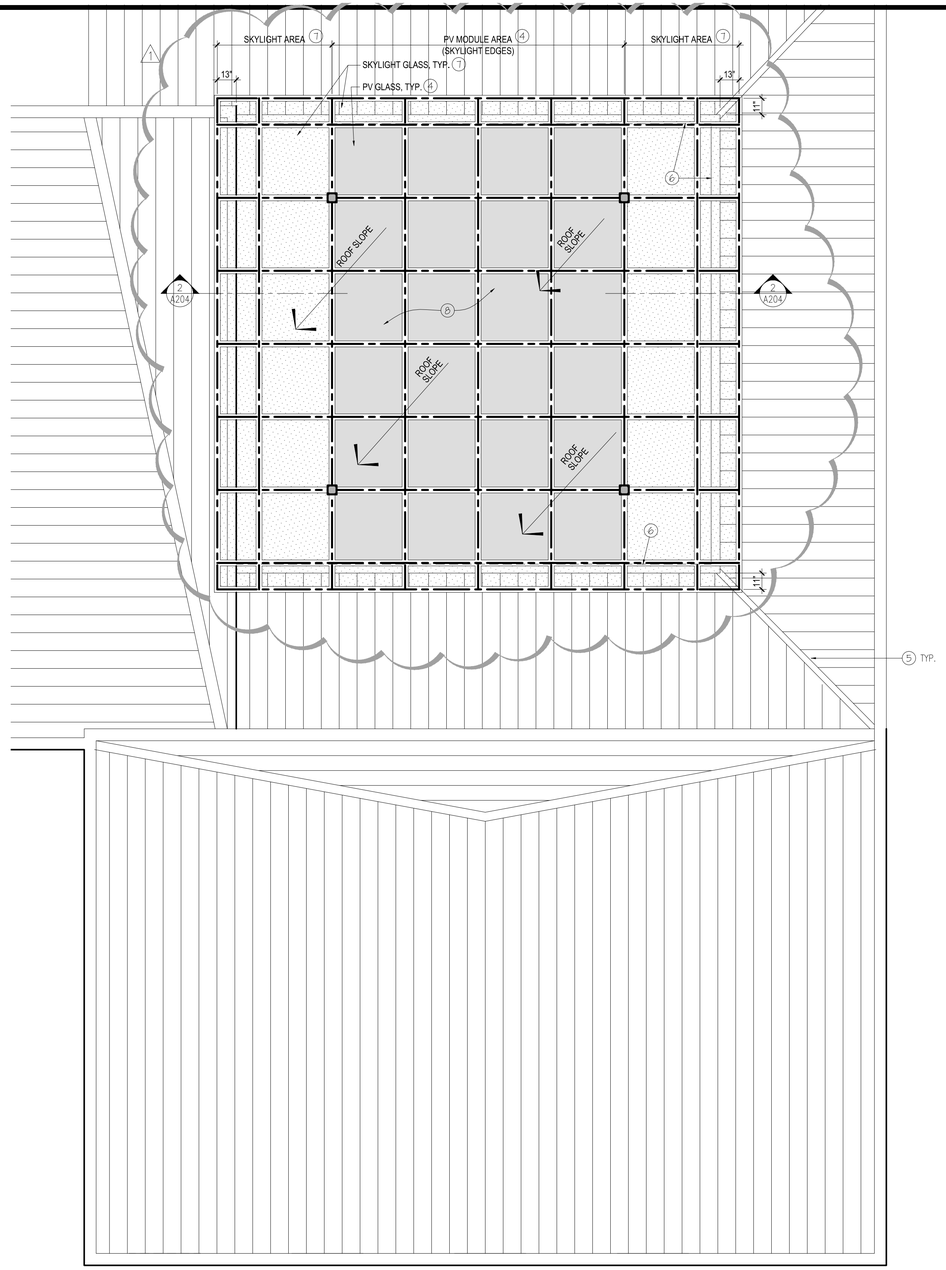

2 PARTIAL ROOF PLAN
SCALE: 1/4" = 1'-0"

1 A204

REFERENCE NORTH

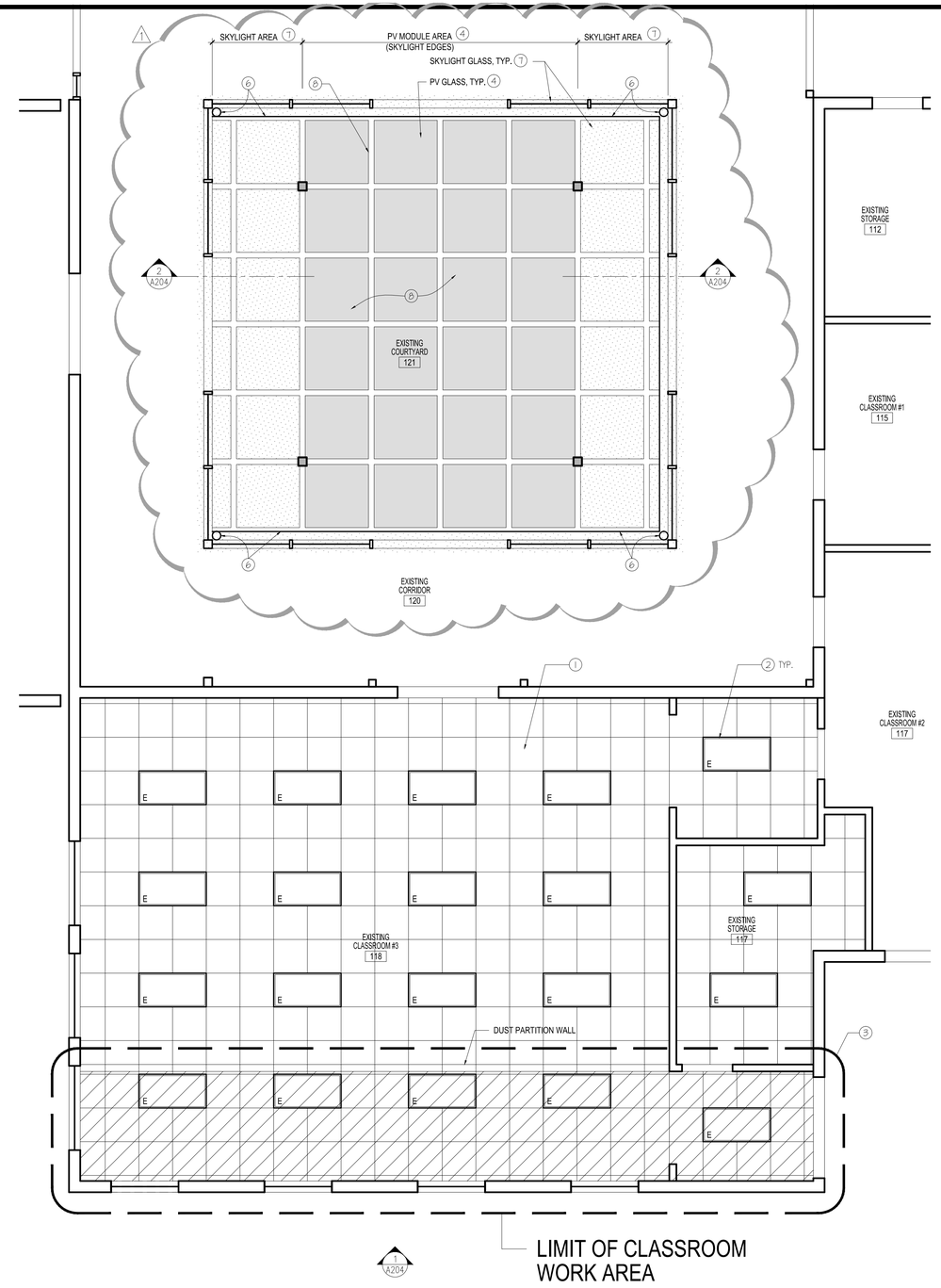

1 PARTIAL REFLECTED CEILING PLAN
SCALE:1/4" = 1'-0"

1 A204

REFERENCE NORTH

CEILING & ROOF NOTES

1. EXISTING T-BAR CEILING TO REMAIN
2. EXISTING LIGHT FIXTURE TO REMAIN
3. PROVIDE DUST PARTITION TO PROTECT AREA DURING CONSTRUCTION
4. NEW TRANSLUCENT PHOTOVOLTAIC GLASS PANEL
5. EXISTING ROOF TO REMAIN
6. PROVIDE NEW 6" GUTTER PARALLEL TO EXISTING ROOF SLOPE FROM MIDDLE TOWARDS CORNERS AND CONNECT TO NEW 6" DOWNSPOUTS
7. NEW SKYLIGHT GLASS WITH FRIT PATTERN TO MATCH PV GLASS (SHGC = 32% / LIGHT TRANSMITTANCE = 16.30%)
8. REFER TO SHEET AD01 FOR ROOF CANOPY DETAILS

LEGEND

- EXISTING WALL TO REMAIN
- WINDOW (REFER TO 2/A202)
- E — EXISTING 2x4 LIGHT FIXTURE TO REMAIN

NO.	REVISIONS	DATE
1	DESIGN DEVELOPMENT PACKAGE	2/17/16
2	CONSTRUCTION DOCUMENT PACKAGE	3/18/16
3	PLAN CHECK SUBMITTAL	3/18/16
4	PLAN CHECK CORRECTION #1	04/11/16

REGISTERED ARCHITECT
CHRISTY LAMBERT
C 28317
STATE OF CALIFORNIA

SAA ASSOCIATES
Architecture Development Management
SAA ASSOCIATES
P.O. BOX 93786,
PASADENA, CA 91109
T: 818-437-8452

PROJECT:
MADRONA MARSH NATURE CENTER IMPROVEMENTS

ADDRESS:
3201 PLAZA DEL AMO BOULEVARD TORRANCE, CA 90503

DRAWING TITLE:
PARTIAL REFLECTED CEILING PLAN & PARTIAL ROOF PLAN

PRINT DATE: 04/19/2016

PROJECT NUMBER: XXXX

APPLICATION NUMBER:

SHEET NUMBER
A203

F:\backup 1\MDUSAA & Assoc\Madrona Marsh\CD\mm-A203-RCP-ROOF Plans.dwg 04/19/2016 07:05

KEY NOTES

1. NEW PULP STUDIO REF SWITCHLITE WINDOW - 1" IGU WITH SOLAR BAN 60 (REFER TO FLR. PLAN)
2. EXISTING STUCCO TO REMAIN: PATCH/REPAIR TO MATCH EXISTING AT WINDOWS
3. PATCH/REPAIR/PAINT EXISTING WALL TO MATCH EXISTING
4. NEW TRANSLUCENT PHOTOVOLTAIC GLASS PANEL
5. NEW SKYLIGHT GLASS WITH FRIT PATTERN TO MATCH PV GLASS

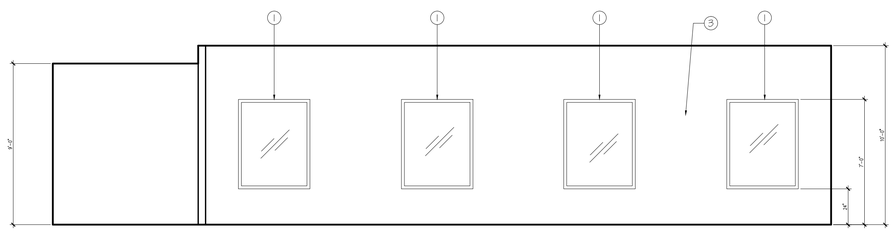

3 INTERIOR ELEVATION @ CLASSROOM #3
SCALE: 1/4" = 1'-0"

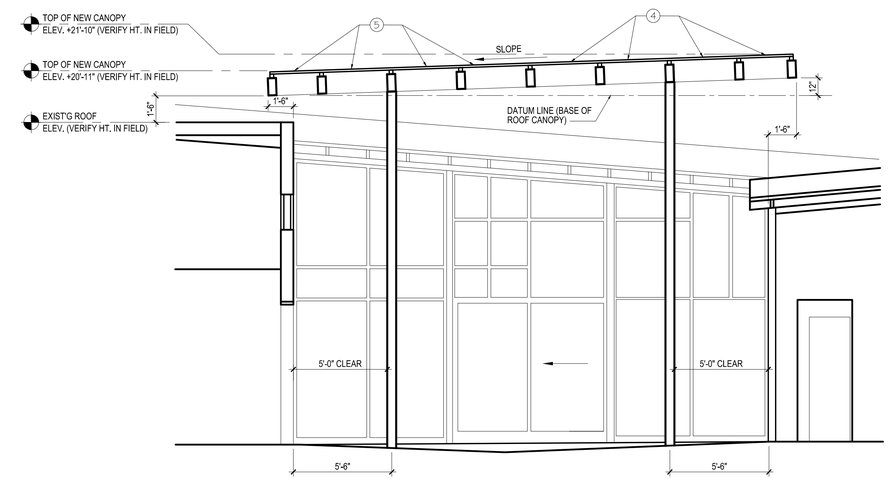

2 SECTION A-A @ COURTYARD
SCALE: 1/4" = 1'-0"

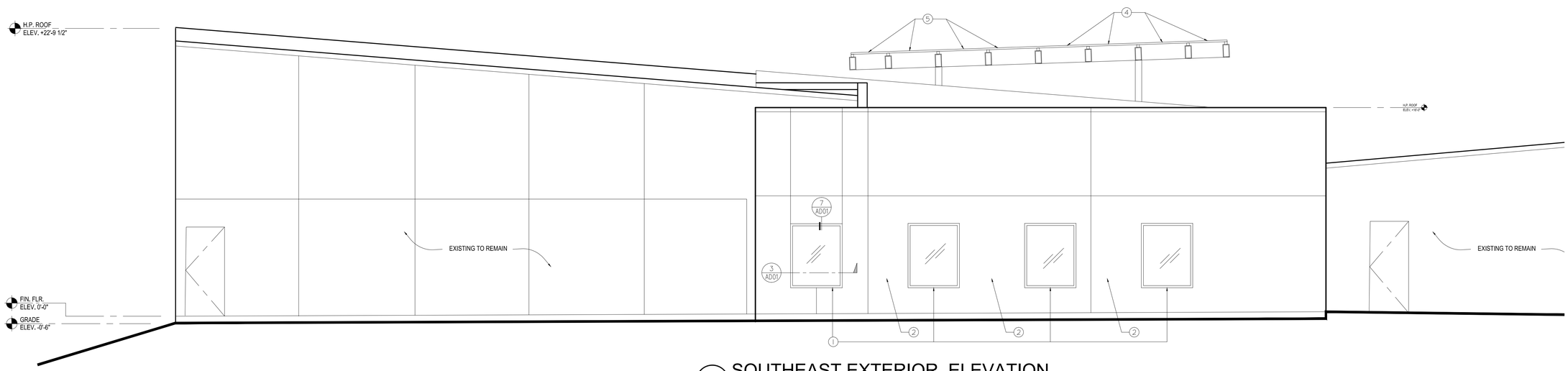

1 SOUTHEAST EXTERIOR ELEVATION
SCALE: 1/4" = 1'-0"

NO.	REVISIONS	DATE
1	DESIGN DEVELOPMENT PACKAGE	2/17/16
2	CONSTRUCTION DOCUMENT PACKAGE	3/18/16
3	PLAN CHECK SUBMITTAL	3/18/16

SAA ASSOCIATES
Architecture Development Management
SAA ASSOCIATES
P.O. BOX 93786,
PASADENA, CA 91109
T: 818-437-8452

PROJECT:
MADRONA MARSH NATURE CENTER IMPROVEMENTS

ADDRESS:
3201 PLAZA DEL AMO BOULEVARD TORRANCE, CA 90503

DRAWING TITLE
INTERIOR & EXTERIOR ELEVATIONS + BUILDING SECTIONS

PRINT DATE: 04/19/2016
PROJECT NUMBER: XXXX
APPLICATION NUMBER:
SHEET NUMBER:
A204

F:\backup 1\MDU\SAA & Assoc\Madrona Marsh\CDs\mm-A204-ELEV_SECT.dwg 04/19/2016 01:06

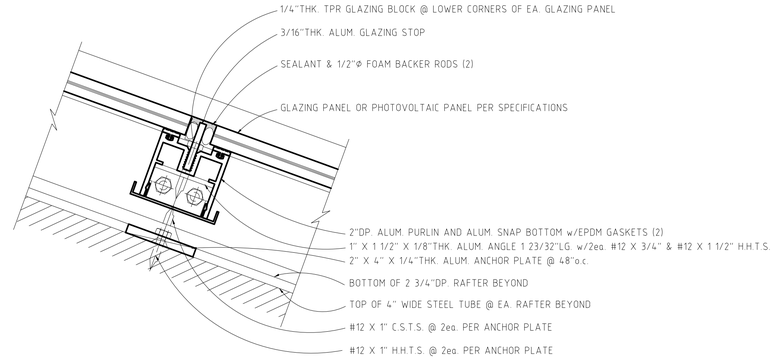

6 MID-SPAN PURLIN SECTION

HALF SIZE

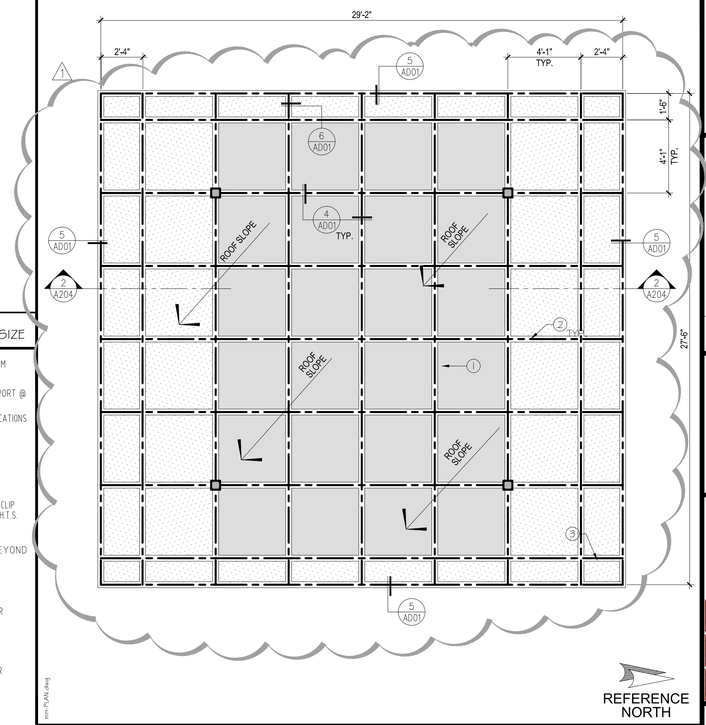

2 ROOF CANOPY DETAIL

1/4" = 1'-0"

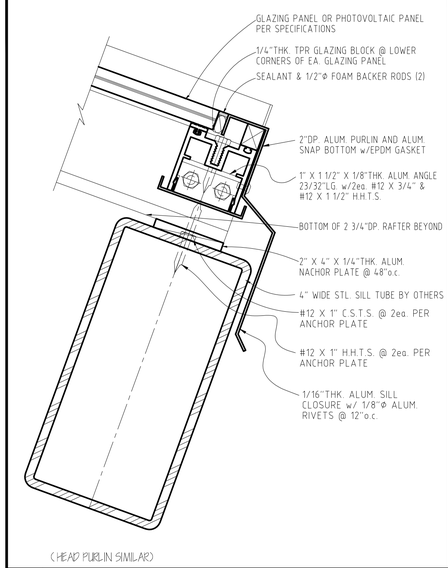

8 SILL PURLIN SECTION

HALF SIZE

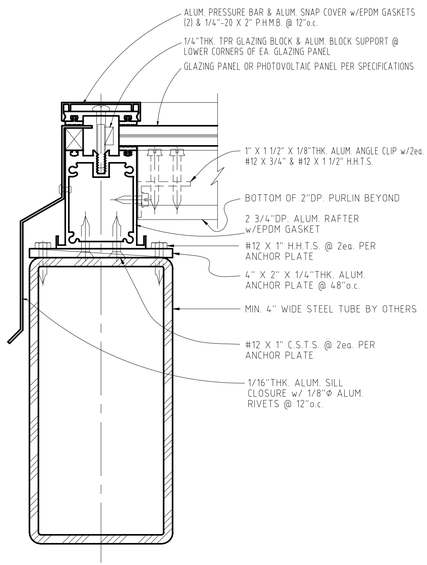

5 END RAFTER SECTION

HALF SIZE

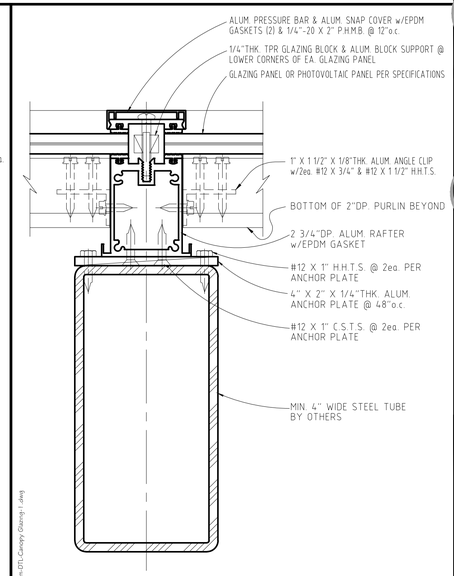

4 MAIN RAFTER SECTION

HALF SIZE

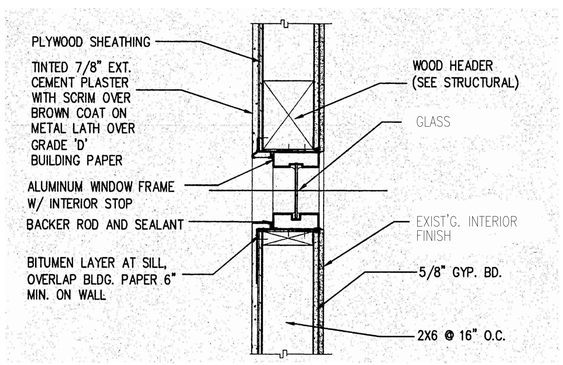

7 WINDOW HEAD/SILL DETAIL

1-1/2" = 1'-0"

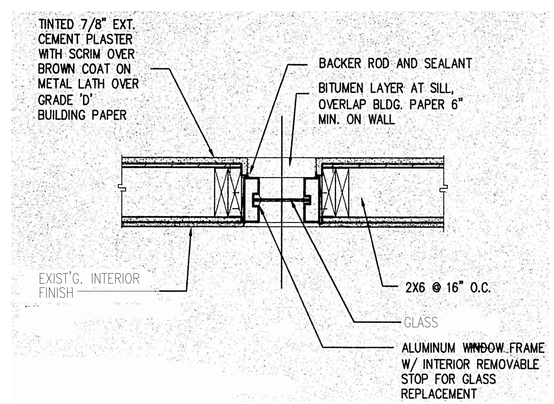

3 WINDOW JAMB DETAIL

1-1/2" = 1'-0"

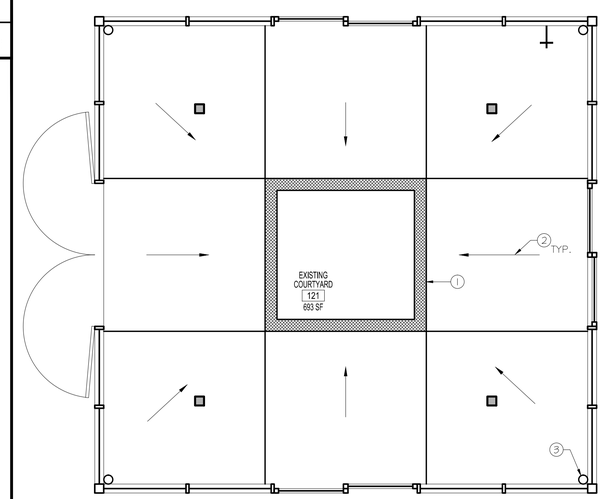

KEY NOTES

1. PROVIDE A NEW CONCRETE SLAB AND DRAIN AT EXISTING COURTYARD. CONCRETE SLAB SHALL HAVE MEDIUM BROOM FINISH, WITH COLOR TO BE SELECTED BY OWNER.
2. DIRECTION OF NEW SLAB SLOPE, TYP.
3. NEW 6" DOWNSPOUT AT ALL 4 CORNERS OF COURTYARD

1 COURTYARD DETAIL

1/4" = 1'-0"

NO.	REVISIONS	DATE
1	DESIGN DEVELOPMENT PACKAGE	2/17/16
2	CONSTRUCTION DOCUMENT PACKAGE	3/18/16
3	PLAN CHECK SUBMITTAL	3/18/16
4	PLAN CHECK CORRECTION #1	04/11/16

SAA ASSOCIATES
Architecture Development Management
SAA ASSOCIATES
P.O. BOX 93786,
PASADENA, CA 91109
T: 818-437-8452

PROJECT:
MADRONA MARSH NATURE CENTER IMPROVEMENTS

ADDRESS:
3201 PLAZA DEL AMO BOULEVARD TORRANCE, CA 90503

DRAWING TITLE
DETAILS

PRINT DATE: 04/19/2016
PROJECT NUMBER: XXXX
APPLICATION NUMBER:
SHEET NUMBER:
AD01

F:\backup 1\MDU\SAA & Assoc\Madrona Marsh\CDs\mm-AD01-Details.dwg 04/19/2016 01:07

GENERAL NOTES:

1. DETAILS OF CONSTRUCTION NOT SHOWN SHALL BE OF SAME NATURE AS THOSE SHOWN FOR SIMILAR CONDITIONS. REFER TO THE TYPICAL DETAIL SHEETS FOR TYPICAL DETAILS OF CONSTRUCTION. TYPICAL DETAILS APPLY TO ALL CONSTRUCTION UNLESS SPECIFICALLY NOTED OR SHOWN OTHERWISE. WHERE CONDITIONS REQUIRE MODIFICATIONS OF A TYPICAL DETAIL, THE CONTRACTOR SHALL SUBMIT MODIFIED DETAIL FOR APPROVAL BY THE ENGINEER OF RECORD PRIOR TO FABRICATION AND INSTALLATION. DETAILS OF CONSTRUCTION NOT SHOWN SHALL BE OF SAME NATURE AS THOSE SHOWN FOR SIMILAR CONSTRUCTION.

2. CONTRACTOR SHALL CONSIDER THE PROJECT SPECIFICATIONS A PART OF THE CONTRACT DOCUMENTS. WHERE INFORMATION IS CONFLICTING, SPECIFIC DETAILS SHALL GOVERN OVER TYPICAL DETAILS WHICH SHALL GOVERN OVER THESE NOTES WHICH SHALL GOVERN OVER SPECIFICATIONS.

3. ALL DIMENSIONS ON STRUCTURAL DRAWINGS SHALL BE CHECKED AGAINST ARCHITECTURAL DIMENSIONS. DO NOT SCALE DRAWINGS. IF DIMENSIONS ARE OMITTED OR NOT CLEAR, CONTACT THE ARCHITECT (ARCH) OR STRUCTURAL ENGINEER OF RECORD (SEOR). ALL DIMENSIONS RELATED TO EXISTING CONDITIONS SHALL BE FIELD VERIFIED BY THE CONTRACTOR. DIMENSIONS ARE TO THE FACE OF STUDS, AND TO CENTERLINE OF COLUMNS UNO.

4. IT IS THE CONTRACTOR'S RESPONSIBILITY TO IMMEDIATELY NOTIFY THE SEOR OF ANY CONFLICTS BETWEEN THE STRUCTURAL DRAWINGS AND OTHER DRAWINGS; OR EXISTING CONDITIONS NOT SHOWN OR DIFFERENT FROM THOSE SHOWN ON DRAWINGS PRIOR TO COMMENCEMENT OF WORK. THE CONTRACTOR IS NOT TO ORDER MATERIAL OR CONSTRUCT ANY PORTION OF THE BUILDING THAT IS IN CONFLICT UNTIL THE CONFLICT IS RESOLVED WITH THE AFFECTED PARTIES.

5. THE STRUCTURAL DRAWINGS AND SPECIFICATIONS REPRESENT THE FINISHED STRUCTURE. UNLESS OTHERWISE SHOWN THEY DO NOT INDICATE METHOD OF CONSTRUCTION. THE CONTRACTOR SHALL PROVIDE ALL MEASURES NECESSARY TO PROTECT THE CONSTRUCTION AND ALL ADJACENT PROPERTIES DURING CONSTRUCTION. SUCH MEASURES SHALL INCLUDE BUT ARE NOT LIMITED TO BRACING, SHORING OF LOADS DUE TO CONSTRUCTION EQUIPMENT, ETC. OBSERVATION VISITS TO THE SITE BY THE ARCHITECT OR SEOR SHALL NOT INCLUDE OBSERVATION OF THE ABOVE ITEMS.

6. SUBSTITUTION REQUESTS FOR MATERIALS SPECIFIED ON THE STRUCTURAL DRAWINGS MAY BE CONSIDERED WITH MATERIALS HAVING EQUIVALENT OR GREATER CAPACITY AND PERFORMANCE. CURRENT EVALUATION REPORTS AND PRODUCT INFORMATION SHALL BE PROVIDED TO THE STRUCTURAL ENGINEER DEMONSTRATING THE REQUIRED CAPACITY AND PERFORMANCE OF THE MATERIAL TO BE SUBSTITUTED. WRITTEN APPROVAL FROM THE SEOR SHALL BE OBTAINED PRIOR TO THE SUBSTITUTION OF ANY MATERIAL SPECIFIED ON THE STRUCTURAL DOCUMENTS.

7. IT IS THE CONTRACTOR'S RESPONSIBILITY TO COMPLY WITH THE PERTINENT SECTIONS OF THE "CONSTRUCTION SAFETY ORDERS" ISSUED BY THE STATE OF CALIFORNIA, LATEST EDITION, AND ALL OSHA REQUIREMENTS AS THEY APPLY TO THIS PROJECT. THE ARCHITECT, SEOR, AND THE OWNER DO NOT ACCEPT ANY RESPONSIBILITY FOR THE CONTRACTOR'S FAILURE TO COMPLY WITH THESE REQUIREMENTS.

8. ALL WORK IS NEW (N) UNLESS INDICATED AS EXISTING (E).

9. CONSTRUCTION MATERIALS SHALL BE DISTRIBUTED WHEN PLACED ON THE STRUCTURE SUCH THAT LOADS DO NOT EXCEED DESIGN LIVE LOADS OR RESULT IN AN UNBALANCED CONDITION.

10. REFER TO THE PROJECT SPECIFICATIONS FOR SHOP DRAWING REQUIREMENTS AND SUBMITTALS.

STRUCTURAL DESIGN CRITERIA:

1. CODES:
   ALL WORK SHALL BE IN CONFORMANCE WITH THE CALIFORNIA BUILDING CODE (CBC) 2013 EDITION, INCLUDING ALL AMENDMENTS. ALL STANDARDS USED SHALL BE THE LATEST VERSION APPROVED BY THE CODE ENFORCEMENT AGENCY ON THE DATE OF THE PERMIT ISSUANCE UNLESS SPECIFICALLY NOTED OTHERWISE.

2. DESIGN GRAVITY LOADS:

CLASSROOM	
	DL = 20 PSF (ASSUMED)
	LL_R = 20 PSF
ATRIUM CANOPY	
	DL = 20 PSF
	LL_R = 20 PSF

3. WIND DESIGN INFORMATION:

I = 1.0	OCCUPANCY CAT. II	
BASIC WIND SPEED V_{fm} = 110 MPH (3 SEC GUST), EXPOSURE C		
INTERNAL PRESSURE COEFFICIENT GC_{pi} = ±0.18		

4. SEISMIC DESIGN INFORMATION:

I = 1.0	OCCUPANCY CAT. II		SITE CLASS D	
S_S = 1.64	S_1 = 0.623	S_{DS} = 1.09	S_{D1} = 0.623	
EQUIVALENT LATERAL FORCE PROCEDURE				
STRUCTURAL SYSTEM:				
LIGHT FRAMED (WOOD) SHEATHED WITH WOOD STRUCTURAL WALLS (CLASSROOM)				
	R = 6.5	Ω = 3	C_d = 4	
ORDINARY STEEL CANTILEVER COLUMN				
	R = 1.25	Ω = 1.25	C_d = 1.25	

FOUNDATION AND SLAB ON GRADE NOTES:

1. NO SOILS REPORT AVAILABLE; THEREFORE, MINIMUM VALUES USED PER 2013 CBC.

2. ALLOWABLE VERTICAL BEARING PRESSURE = 1500 PSF
   ALLOWABLE LATERAL BEARING PRESSURE = 100 PSF PER FT OF DEPTH

3. THE CONTRACTOR SHALL CONFORM TO ALL RECOMMENDATIONS AND CONDITIONS INDICATED IN THE 2013 CBC. A GEOTECHNICAL ENGINEER SHALL OBSERVE ALL FOOTING EXCAVATIONS PRIOR TO PLACING CONCRETE.

4. SUBSURFACE SOIL PREPARATION:
   A. ALL EXISTING UNDOCUMENTED FILL SHALL BE REMOVED AND RECOMPACTED. ALL TOPSOILS SHALL BE REMOVED AS REQUIRED BY THE GEOTECHNICAL ENGINEER.
   B. GEOTECHNICAL ENGINEER SHALL BE RETAINED DURING THE OVEREXCAVATION PROCESS. THE ACTUAL DEPTH OF REMOVAL WILL BE DETERMINED DURING GRADING OPERATIONS.
   C. OFFSITE FILL MATERIAL SHALL BE APPROVED BY THE GEOTECHNICAL ENGINEER PRIOR TO PLACEMENT.

5. SPREAD FOOTINGS ARE CENTERED UNDER WALLS AND COLUMNS, UNO.

6. FOOTING ELEVATIONS ARE NOTED ON THE PLANS AND DETAILS AND SHALL BE USED FOR BIDDING. IN ANY CASE, FOOTINGS SHALL BEAR ON FIRM UNDISTURBED SOIL OR ENGINEERED FILL, IN ACCORDANCE WITH THE 2013 CBC AND DETAILS SHOWN.

7. CONTRACTOR SHALL PROTECT ALL UTILITY LINES, ETC. ENCOUNTERED DURING EXCAVATION AND BACKFILLING.

8. FOOTING BACKFILL AND UTILITY TRENCH BACKFILL WITHIN BUILDING AREA SHALL BE MECHANICALLY COMPACTED IN LAYERS WITH THE APPROVAL OF THE GEOTECHNICAL ENGINEER. FLOODING IS NOT PERMITTED.

9. ALL TRENCHES SHALL COMPLY WITH APPLICABLE OSHA REQUIREMENTS.

10. ALL EXCAVATIONS SHALL BE PROPERLY BACKFILLED BUT NOT BEHIND RETAINING WALLS BEFORE CONCRETE OR MASONRY ATTAINS ITS FULL DESIGN STRENGTH.

11. THE DESIGN OF ALL RETAINING WALLS AND SUBTERRANEAN BUILDING WALLS INDICATED ON THESE DRAWINGS IS BASED ON DRAINED SOILS.

12. CONSTRUCTION JOINTS (CJ) AND SAWCUT (SC) JOINTS IN SLABS SHALL OCCUR WHERE LOCATED ON PLANS AND DETAILS. CJ'S SHALL HAVE FORMED POUR STOPS. CONSTRUCTION JOINTS IN WALLS AND FOOTINGS NEED NOT OCCUR AT THE SAME LOCATION, UNO.

13. SEE ARCHITECT'S PLANS FOR LOCATIONS OF SLAB SLOPES, DEPRESSIONS, CURBS, DRAINS, NON-STRUCTURAL PARTITIONS AND OTHER EMBEDDED ITEMS NOT SHOWN ON THE STRUCTURAL PLANS.

14. ALL GRADING, FOUNDATION FOOTINGS, AND DRAINAGE PLANS SHALL BE REVIEWED BY THE GEOTECHNICAL ENGINEER UPON SUBMITTAL. A CERTIFIED LETTER BY THE GEOTECHNICAL ENGINEER IS REQUESTED STATING THAT THE RECOMMENDATIONS CONTAINED WITHIN THE SOILS REPORT HAVE BEEN INCORPORATED INTO THE PROJECT PLANS AND SPECIFICATIONS PRIOR TO CONSTRUCTION.

15. PRIOR TO THE CONTRACTOR REQUESTING A BUILDING DEPARTMENT FOUNDATION INSPECTION, THE SOILS ENGINEER SHALL ADVISE THE BUILDING OFFICIAL IN WRITING THAT:
   A. THE BUILDING PAD WAS PREPARED IN ACCORDANCE WITH THE 2013 CBC.
   B. THE UTILITY TRENCHES HAVE BEEN PROPERLY BACKFILLED AND COMPACTED.
   C. THE FOUNDATION EXCAVATIONS COMPLY WITH THE INTENT OF THE 2013 CBC.

STRUCTURAL CONCRETE NOTES:

1. CONCRETE SHALL BE MIXED, PLACED AND CURED IN ACCORDANCE WITH ACI 318, LATEST EDITION, AND PROJECT SPECIFICATIONS.

2. CONCRETE SHALL NOT BE DROPPED THROUGH REINFORCING STEEL (AS IN WALLS) SO AS TO CAUSE SEGREGATION OF AGGREGATES. IN SUCH CASES, HOPPERS AND VERTICAL CHUTES OR TRUNKS SHALL BE USED. CHUTES OR TRUNKS SHALL BE OF VARIABLE LENGTHS SO THAT FREE UNCONFINED FALL OF CONCRETE SHALL NOT EXCEED SIX FEET. A SUFFICIENT NUMBER OF CHUTES OR TRUNKS SHALL BE USED TO ENSURE THE CONCRETE IS KEPT LEVEL AT ALL TIMES.

3. CONSTRUCTION JOINTS SHALL BE CLEANED AND ROUGHENED BY REMOVING THE ENTIRE SURFACE TO EXPOSE CLEAN AGGREGATE SOLIDLY EMBEDDED IN THE MORTAR MATRIX. SLUSH WITH A COAT OF NEAT CEMENT BEFORE PLACING CONCRETE. SEE PLANS AND DETAILS FOR LOCATION AND TYPE OF CONSTRUCTION JOINT. LOCATIONS OF ADDITIONAL CONSTRUCTION JOINTS NOT SHOWN ON THESE PLANS SHALL BE SUBMITTED FOR APPROVAL BY THE EOR PRIOR TO PLACING ANY CONCRETE.

4. STRUCTURAL CONCRETE SHALL MEET THE FOLLOWING DESIGN CRITERIA:

LOCATION	MIN-28 DAY COMP STRENGTH	CONC TYPE [a]	MAX AGGREGATE SIZE	MAX W/C RATIO	MAX SLUMP [b]
FOUNDATIONS	3000 psi	NWC	1 1/2"	0.50	4"
SLAB ON GRADE	3000 psi	NWC	1"	0.46	4"
ALL OTHER STRUCTURAL CONCRETE NOT NOTED ABOVE	3000 psi	NWC	1"	0.50	6"

   a. MAXIMUM DRY WEIGHT OF LIGHTWEIGHT CONCRETE SHALL BE 115 PCF, UNLESS APPROVED BY SEOR.
   b. SLUMP MEASURED PRIOR TO SUPERPLASTICIZER, WHERE OCCURS.

5. CONCRETE MIX DESIGN AND TESTING SHALL MEET THE REQUIREMENTS OF THE BUILDING CODE, AND SPECIFICATIONS. ALL CONCRETE MIXES SHALL BE DESIGNED BY A RECOGNIZED TESTING LAB STAMPED AND SEALED BY A LICENSED CALIFORNIA CIVIL ENGINEER AND SUBMITTED TO THE SEOR FOR REVIEW PRIOR TO CONCRETE PLACEMENT. STRUCTURAL CONCRETE MIXES SHALL CONSIST OF 5 SACK MINIMUM, UNO.

6. AGGREGATES IN NORMAL WEIGHT CONCRETE SHALL CONFORM TO ASTM C-33 (HARDROCK). AGGREGATES IN LIGHT WEIGHT CONCRETE SHALL CONFORM TO ASTM C-330.

7. COMPRESSIVE STRENGTH TEST REPORTS SHALL BE SUBMITTED TO THE BUILDING DEPARTMENT AND THE SEOR.

8. PORTLAND CEMENT SHALL BE TYPE II FOR ALL CONCRETE CONFORMING TO ASTM C150, LOW ALKALI. MILL TESTS WITH CERTIFICATES OF COMPLIANCE SHALL BE SUBMITTED.

9. FLY ASH OR OTHER POZZOLANS CONFORMING TO ASTM C618 CLASS N OR F MAY BE USED AS A PARTIAL SUBSTITUTION FOR PORTLAND CEMENT UP TO A MAXIMUM OF 25% TOTAL CEMENTITIOUS MATERIALS BY WEIGHT IF THE MIX DESIGN IS PROPORTIONED BY METHOD B OR C.

10. CONCRETE MIXING OPERATIONS, ETC. SHALL CONFORM TO ASTM C94.

11. LEAN CONCRETE, WHERE SPECIFICALLY INDICATED, SHALL CONTAIN 2 SACKS OF CEMENT PER CUBIC YARD OF CONCRETE.

STRUCTURAL CONCRETE NOTES (CONT):

12. DRYPACK OR NONSHRINK GROUT SHALL HAVE A MINIMUM 28 DAY COMPRESSIVE STRENGTH OF 5000 PSI, AND CONSIST OF MASTERFLOW 713, FIVE STAR GROUT, SIKA GROUT 212, EMBECO 636, OR APPROVED EQUAL. FOR THICK GROUT LAYERS FOLLOW MANUFACTURER'S GUIDELINES TO ATTAIN THE REQUIRED STRENGTH, WHICH MAY INCLUDE THE ADDITION OF PEA GRAVEL.

13. PRIOR TO ERECTING ANY ELEMENTS THAT LOAD THE FOUNDATION, CONCRETE MUST REACH AN UNCONFINED COMPRESSION STRENGTH OF 2000 PSI MINIMUM AS DETERMINED BY TESTING OR PREVIOUSLY DOCUMENTED DATA FOR THE MIX DESIGN USED UNDER SIMILAR CONDITIONS, AND MUST BE ALLOWED TO CURE FOR A MINIMUM OF 3 DAYS.

14. DO NOT USE ANY CONCRETE OR GROUT CONTAINING CHLORIDES. WATER USED IN MIX SHALL BE CLEAN AND POTABLE.

15. FOR INTERIOR SLABS-ON-GRADE AND ALL OTHER SLABS RECEIVING ADHERED FLOORING FINISHES (I.E., GLUED, ETC.), THE MAXIMUM W/C RATIO SHALL NOT EXCEED 0.46. CURING COMPOUNDS USED ON CONCRETE THAT IS TO RECIEVE FINISHES SHALL BE COMPATIBLE WITH TILE AND ADHESIVES OR GROUTS IN ACCORDANCE WITH MANUFACTURER'S DATA AND BE APPROVED BEFORE USE.

16. MAINTAIN CONCRETE ABOVE 50 DEGREES FAHRENHEIT AND IN A MOIST CONDITION FOR A MINIMUM OF 7 DAYS AFTER PLACEMENT UNLESS OTHERWISE ACCEPTED BY SEOR.

17. SEE ARCHITECTURAL DRAWINGS FOR WALL OPENINGS, WALL OFFSETS, CHAMFERS, KERFS, DRIPS AND FOR EXTENT OF DEPRESSIONS, RAMPS, ETC. PROVIDE SLEEVES FOR ALL PIPES THROUGH CONCRETE WALLS AND FOOTINGS WHERE SHOWN ON THESE DRAWINGS. CORING IS NOT PERMITTED WITHOUT PRIOR APPROVAL BY THE SEOR.

18. EXPOSED CORNERS OF SLABS, BEAMS, WALLS, COLUMNS, ETC. SHALL BE FORMED WITH 3/4" CHAMFER, UNO.

REINFORCING STEEL NOTES:

1. REINFORCING GRADES FOR CONCRETE OR MASONRY:
   A. ALL BARS EXCEPT THOSE TO BE WELDED.......... ASTM A615, GRADE 60
   B. TIES AND STIRRUPS ....ASTM A615, GRADE 60
   C. WELDED WIRE FABRIC ....ASTM A185
   D. ALL BARS TO BE WELDED .... ASTM A706, GRADE 60

2. MAINTAIN MINIMUM CONCRETE COVER FROM FACE OF CONCRETE TO EDGE OF ALL REINFORCEMENT AS FOLLOWS (UNO):

CONDITION		COVER
CONCRETE POURED AGAINST EARTH		3"
CONCRETE POURED IN FORMS AND EXPOSED TO WEATHER OR EARTH		
	- #6 BARS AND LARGER	2"
	- #5 BARS AND SMALLER	1 1/2"
INTERIOR COLUMNS AND BEAMS		1 1/2"
INTERIOR WALL FACES AND RAISED SLABS		1 1/2"
STRUCTURAL SLABS ON GRADE		
	- FROM BOTTOM OF SLAB	2"
	- FROM TOP OF SLAB	1 1/2"
OTHER CONCRETE NOT EXPOSED TO WEATHER OR EARTH FOR #11 BARS AND SMALLER		3/4"

   PROVIDE THE LARGEST COVER REQUIRED FOR ALL APPLICABLE CONDITIONS. WHERE #3 STIRRUPS OR TIES ARE USED, ENSURE THAT THE COVER FOR LONGITUDINAL BARS IS ADEQUATE.

3. REINFORCEMENT SHALL BE PLACED IN ACCORDANCE WITH THE CONCRETE REINFORCING STEEL INSTITUTE (CRSI) "MANUAL OF STANDARD PRACTICE". EACH REINFORCING BAR SHALL BE WIRED TO A CROSS BAR AT A MAXIMUM SPACING OF 24" OC. PROVIDE ALL ACCESSORIES NECESSARY TO SUPPORT REINFORCING IN POSITIONS SHOWN ON THE PLANS.

4. SPLICES IN CONTINUOUS REINFORCEMENT AS USED IN WALLS, WALL FOOTINGS, ETC., SHALL HAVE A CLASS "B" LAP (1'-6" MIN) AND THE SPLICES IN ADJACENT BARS SHALL BE NOT LESS THAN 5'-0" APART. VERTICAL WALL BARS SHALL BE SPLICED AT OR NEAR FLOOR LINES. BARS MAY BE WIRED TOGETHER AT SPLICES OR LAPS EXCEPT FOR TOP REINFORCING OF BEAMS AND SLABS OR WHERE SPECIFICALLY DETAILED TO BE SEPARATED. WELDED WIRE FABRIC SHALL BE LAPPED 12" MINIMUM

5. ALL DOWELS, ANCHOR BOLTS AND OTHER HARDWARE TO BE SET IN CONCRETE SHALL BE TIED IN PLACE PRIOR TO PLACEMENT OF CONCRETE. NO WET SETTING, STABBING, RODDING OR OTHER MOVEMENT OF EMBEDDED ITEMS SHALL BE PERFORMED DURING PLACEMENT OF CONCRETE.

6. BEND REINFORCING BARS COLD.

7. STEEL SHALL BE KEPT CLEAN AND FREE OF RUST.

8. DOWELS BETWEEN FOOTING AND WALLS OR COLUMNS SHALL BE THE SAME GRADE, SIZE AND SPACING AS THE MAIN REINFORCING, UNO.

9. ALL BARS SHALL BE MARKED SO THEIR IDENTIFICATION CAN BE MADE WHEN THE FINAL IN PLACE INSPECTION IS MADE.

10. CHAIRS OR SPACERS FOR REINFORCING SHALL BE NON-FERROUS OR PLASTIC COATED WHEN RESTING ON EXPOSED SURFACES.

SHORING AND EXCAVATIONS NOTES

1. THE CONTRACTOR SHALL PROVIDE FOR THE DESIGN, APPROVALS, PERMITS, INSTALLATION AND MONITORING OF ALL TEMPORARY SHORING AND BRACING AS REQUIRED TO SUPPORT EXISTING FRAMING WHERE SUPPORT ELEMENTS (BEAMS, COLUMNS, AND BEARING WALLS) ARE TO BE REMOVED.

2. ALL WORK SHALL BE PERFORMED IN ACCORDANCE WITH THE LATEST EDITION OF THE CALIFORNIA CONSTRUCTION SAFETY ORDERS (CAL-OSHA).

3. THE DESIGN OF THE SHORING SYSTEM SHALL BE BASED UPON RECOMMENDATIONS CONTAINED IN THE 2013 CBC. THE SHORING CONTRACTOR SHALL FAMILIARIZE HIMSELF WITH ALL DATA THEREIN AND SHALL KEEP A COPY OF THE REPORT AT THE JOB SITE AT ALL TIMES.

4. THE STRUCTURAL ENGINEER RESPONSIBLE FOR THE SHORING DESIGN (HEREAFTER CALLED THE SHORING ENGINEER) SHALL MAKE PERIODIC VISITS TO THE JOB SITE FOR THE PURPOSE OF OBSERVING THE INSTALLATION OF THE SHORING SYSTEM. OBSERVATIONS SHALL INCLUDE, BUT SHALL NOT BE LIMITED TO, THE FOLLOWING:

   A. PRIOR TO THE START OF INSTALLATION, MEET WITH THE GEOTECHNICAL ENGINEER AND SHORING CONTRACTOR TO REVIEW ALL ASPECTS OF THE DESIGN AND INSTALLATION OF THE SHORING.

   B. REVIEW OF CONDITIONS AT COMPLETION OF EXCAVATION. THE CONTRACTOR SHALL NOTIFY THE SHORING ENGINEER AT LEAST 48 HOURS PRIOR TO EACH OF THE ABOVE REQUIRED OBSERVATIONS.

5. CONTROL POINTS SHALL BE ESTABLISHED BY A LICENSED SURVEYOR TO MONITOR ANY HORIZONTAL AND VERTICAL MOVEMENTS OF THE SHORING. INITIAL READINGS SHALL BE SUBMITTED TO THE BUILDING OFFICIAL, AND WEEKLY DATA SHALL BE SUBMITTED AS EXCAVATION PROGRESSES AND THROUGHOUT THE CONSTRUCTION PERIOD. ADDITIONAL READINGS SHALL BE OBTAINED WHEN REQUESTED BY THE BUILDING OFFICIAL, SHORING ENGINEER OR GEOTECHNICAL ENGINEER. IF ANY HORIZONTAL OR VERTICAL MOVEMENT OCCURS, THE GEOTECHNICAL ENGINEER, THE SHORING ENGINEER AND THE STRUCTURAL ENGINEER SHALL EVALUATE SUCH MOVEMENT AND RECOMMEND CORRECTIVE MEASURES, IF NECESSARY BEFORE EXCAVATION IS CONTINUED.

ROUGH CARPENTRY / WOOD NOTES:

1. ALL GRADES SPECIFIED ARE MINIMUM GRADES REQUIRED.

2. DOUGLAS FIR (DF) SHALL BE GRADED BY THE WESTERN WOOD PRODUCTS ASSOCIATION GRADING RULES, AND ASTM D245.

3. REDWOOD SHALL BE GRADED BY THE CALIFORNIA REDWOOD ASSOCIATION, REDWOOD INSPECTION SERVICE.

4. SILL PLATES SHALL BE PRESSURE-TREATED (PT) DOUGLAS FIR #2. REDWOOD IS PERMITTED WITH SEOR APPROVAL.

5. NON-LOAD BEARING STUDS, TOP PLATES, BLOCKING, FURRING AND BRACING SHALL BE...DF #2
   JOISTS, RAFTERS, PURLINS, BEAMS & POSTS SHALL BE ....DF #1 (UNO)
   LOAD BEARING STUDS SHALL BE: (UNO ON PLAN)
   STUDS 0-15' ....DF #2
   STUDS >15' ....DF #1

6. MOISTURE CONTENT OF SAWN LUMBER SHALL NOT EXCEED 18% WHEN FRAMING STARTS OR SHEATHING IS APPLIED. ANY NONCOMPLIANT WORK SHALL BE REJECTED AND REFRAMED WITH ACCEPTABLE LUMBER.

7. TIMBERS 4" NOMINAL IN THE LEAST DIMENSION SHALL NOT CONTAIN BOXED HEART.

8. SILL PLATES SHALL BE PRESSURE-TREATED AND SHALL BE BOLTED TO CONCRETE WITH 5/8" DIAMETER ANCHOR BOLTS AT 32" OC MAX, UNO WITH A BOLT BETWEEN 6" TO 9" FROM THE END OF EACH PIECE OF SILL (2 BOLTS MIN EACH PIECE). PIECE OF SILL SHALL BE CONSIDERED ENDED WHERE PLATE IS CUT OUT OVER ONE-THIRD OF CROSS-SECTION.

9. ANCHOR BOLTS FOR NON-STRUCTURAL WALLS SUPPORTED ON SLABS SHALL HAVE 3 1/2" EMBEDMENT (UNO) MEASURED FROM TOP OF SLAB.

10. ANCHOR BOLTS FOR STRUCTURAL WALLS SHALL HAVE 12" EMBEDMENT (UNO) MEASURED FROM TOP OF SLAB.

11. STUD BEARING WALLS AND PARTITIONS SHALL HAVE DOUBLE TOP PLATES LAPPED AT WALL AND PARTITION INTERSECTIONS. JOINTS IN UPPER AND LOWER MEMBERS OF DOUBLE TOP PLATES SHALL BE STAGGERED AT LEAST 4'-0".

9. HOLES IN WOOD AND STEEL MEMBERS FOR BOLTS SHALL BE THE NOMINAL BOLT DIAMETER PLUS 1/16".

10. ALL BOLTS IN WOOD SHALL BE ASTM A307 STANDARD BOLTS, UNO. BOLTS AND SCREWS SHALL BE TIGHTENED AT TIME OF ERECTION AND RETIGHTENED BEFORE CLOSING IN OR AT THE COMPLETION OF THE JOB.

11. HOLES IN WOOD FOR LAG SCREW SHANK SHALL BE BORED TO THE SAME DIAMETER AND DEPTH AS THE SHANK, AND FOR THE THREADED PORTION BORED WITH A BIT NOT LARGER THAN THE BASE OF THREADS.

12. LAG SCREWS AND SCREWS SHALL BE SCREWED AND NOT DRIVEN INTO PLACE.

13. STEEL WASHERS SHALL BE PROVIDED UNDER HEADS AND NUTS OF ALL BOLTS AND LAG SCREWS WHICH BEAR ON WOOD. STANDARD CUT WASHERS MAY BE USED IN ALL CASES EXCEPT SILL PLATES AND WOOD LEDGERS AGAINST CONCRETE OR MASONRY, WHICH SHALL BE ONE OF THE FOLLOWING SIZES:

BOLT & LAG SCREW DIAMETER	STEEL PLATE WASHER SIZE
1/2"	2" SQ x 1/4"
5/8"	2 1/2" SQ x 1/4"
3/4"	3" SQ x 5/16"
7/8"	3 1/2" SQ x 3/8"
1"	3 3/4" SQ x 3/8"

   NOTE: WASHERS UNDER CARRIAGE BOLT HEADS SHALL BE LARGE ENOUGH TO ALLOW FOR SQUARE SHOULDERS.

14. (S) INDICATES METAL FRAMING CONNECTORS MANUFACTURED BY SIMPSON STRONG TIE COMPANY (CURRENT CATALOG), OR "USP" WITH EQUIVALENT ICC PUBLISHED VALUES AND SHALL BE INSTALLED PER SPECIFICATIONS, NO EXCEPTIONS.

15. INSTALL WINDOWS AND DOORS IN STUD WALLS AFTER DEAD LOADS ARE APPLIED, AND PROVIDE A 1/2" SHIM SPACE AT THE HEAD CONDITION

16. ALL NAILS APPLIED TO TREATED WOOD SHALL BE GALVANIZED STAINLESS STEEL.

TYPICAL FRAMING NOTES:

1. SEE THIS SHEET FOR TYPICAL NOTES, DETAILS, AND NAILING.

2. ONLY LOAD BEARING AND/OR SHEAR WALLS ARE SHOWN. SEE ARCHITECTURAL DRAWINGS FOR ALL OTHER PARTITIONS.

3. ELEVATIONS SHOWN ON PLANS ARE FROM FINISHED FIRST FLOOR, DATUM ELEVATION = 0'-0".

4. ALL EXTERIOR WALLS AND INTERIOR BEARING WALLS ARE 2x6 STUDS @ 16"OC TYPICAL, UNO.

5. ALL EXTERIOR STUD WALLS SHALL BE COMPLETELY SHEATHED WITH 15/32" APA RATED SHEATHING, EXPOSURE-1 (32/16).

6. INTERIOR STRUCTURAL SHEATHED WALLS ARE SHOWN ON PLANS AND SHALL HAVE 15/32" APA RATED SHEATHING EXPOSURE-1, (32/16),TYPICAL UNO.

7. ALL STRUCTURAL WALL SHEATHING IS SPLICED ON 2" NOMINAL BLOCKING AT HORIZONTAL JOINTS, UNO.

8. SEE PLANS FOR LOCATION OF NOMINAL 2X FLAT BLOCKING AT ROOF AND FLOOR SHEATHING PANEL JOINTS. SEE THIS SHEET FOR PLY CLIP REQUIREMENTS AT UNBLOCKED ROOF PANEL JOINTS. T&G FLOOR SHEATHING IS NOT REQUIRED WHERE JOINTS ARE BLOCKED.

9. BRIDGING SHALL BE 2x3 NOMINAL, OR SIMPSON "NB" AND SHALL OCCUR AS SHOWN ON PLANS.

10. SAWN LUMBER GRADING SHALL BE PER "TIMBER SPECIFICATIONS" NOTED ON THESE PLANS.

11. STRUCTURAL FLOOR AND ROOF SHEATHING SHALL BE AS SPECIFIED PER PLAN. NOTE: 1/8" GAP SHALL BE PROVIDED BETWEEN ADJACENT PANELS. PANELS WITH GRADE STAMP INDICATION "SIZED FOR SPACING" MAY BE USED TO FACILITATE THIS REQUIREMENT. SEE PLANS FOR REQUIRED BOUNDARY AND EDGE NAILING:

   BN=BOUNDARY NAILING
   EN=EDGE NAILING
   FN=FIELD NAILING

NAILING SCHEDULE

(UNLESS OTHERWISE NOTED ON PLANS)

NAIL SPACING TO BE NOT LESS THAN REQUIRED PENETRATION. EDGE AND END DISTANCES SHALL BE NOT LESS THAN HALF THIS SPACING. ALL SPACING AND EDGE AND END DISTANCES SHALL BE SUCH AS TO AVOID SPLITTING OF THE WOOD. HOLES FOR NAILS, WHERE NECESSARY TO PREVENT SPLITTING, SHALL BE BORED OF A DIAMETER SMALLER THAN THAT OF THE NAILS. COMMON OR BOX NAILS MAY BE USED FOR NAILING AT TYPICAL CONNECTIONS NOTED BELOW (U.N.O.). FOR ALL CONNECTIONS OTHERWISE NOTED OR DETAILED ON PLANS, COMMON NAILS SHALL BE USED (SEE SCHEDULE BELOW).

CONNECTION, NAIL TYPE	NAILING
JOISTS TO SILL OR GIRDER, TOENAIL	(3) 8d
BRIDGING TO JOIST, TOENAIL EACH END	(2) 8d
1" x 6" SUBFLOOR OR LESS TO EACH JOIST, FACE NAIL	(2) 8d
WIDER THAN 1" x 6" SUBFLOOR TO EACH JOIST, BLIND & FACE NAIL	(3) 8d
2" SUBFLOOR TO JOIST OR GIRDER, BLIND AND FACE NAIL	(2) 16d
SILL PLATE TO JOIST OR BLOCKING, FACE NAIL	16d @ 16" OC
TOP PLATE TO STUD, END NAIL	(2) 16d
STUD TO SILL PLATE	(4) 8d, TOENAIL OR (2) 16d, END NAIL
DOUBLE STUDS, FACE NAIL	16d @ 24" OC
DOUBLE TOP PLATES, FACE NAIL	16d @ 16"OC (COMMON)
TOP PLATES, LAPS, FACE NAIL	(8) 16d (UNO) (18) 16d @ SHEARWALL LOCATIONS
TOP PLATES AT INTERSECTIONS, FACE NAIL	(2) 16d
CONTINUOUS HEADER, TWO PIECES	16d @ 16" OC ALONG EACH EDGE
CEILING JOISTS TO PLATE, TOENAIL	(3) 8d
CONTINUOUS HEADER TO STUD, TOENAIL	(4) 8d
CEILING JOISTS, LAPS OVER PARTITIONS, FACE NAIL	(3) 16d
CEILING JOISTS TO PARALLEL RAFTERS, FACE NAIL	(3) 16d
RAFTER TO PLATE, TOENAIL	(3) 8d
1" BRACE TO EACH STUD & PLATE, FACE NAIL	(2) 8d
1"x8" SHEATHING OR LESS TO EACH BEARING, FACE NAIL	(2) 8d
WIDER THAN 1"x8" SHEATHING TO EACH BEARING, FACE NAIL	(3) 8d
BUILT-UP CORNER STUDS	16d @ 24" OC
BUILT-UP GIRDERS AND BEAMS	20d @ 32" OC AT TOP, BOTT & STGRD (2) 20d AT ENDS AND @ EA SPLICE (2) 16d @ EA BEARING

NAIL SCHEDULE (COMMON NAILS)		
SIZE	DIAMETER (IN)	LENGTH (IN)
8d	0.131	$2\frac{1}{2}$
10d	0.148	3
12d	0.148	3 1/4
16d	0.162	3 1/2
20d	0.192	4

SHORTENED 10d COMMON NAILS MAY BE USED TO FASTEN WOOD STRUCTURAL PANELS UNO. USE THE FOLLOWING MINIMUM LENGTHS: 10d x 2 1/4" FOR 15/32" OR THINNER PANELS, 10d x 2 3/8" FOR 19/32" PANELS, AND FULL LENGTH FOR 5/8" OR THICKER PANELS.

REGISTERED PROFESSIONAL ENGINEER
YOUNG-KEUN NAM
No. S4029
Exp. 9/30/16
STRUCTURAL
STATE OF CALIFORNIA

NO.	REVISIONS	DATE
1	DESIGN DEVELOPMENT PACKAGE	2/17/16
2	CONSTRUCTION DOCUMENT PACKAGE	3/18/16
3	PLAN CHECK SUBMITTAL	3/18/16

VCA ENGINEERS INC
CIVIL • STRUCTURAL
MBE • DBE • SBE
Quality Service Commitment
2151 Michelson Dr. #240
Irvine, CA 92612
Tel. 949.679.0870
Fax. 949.679.9370
Project No. C166

SAA ASSOCIATES
Architecture Development Management
SAA ASSOCIATES
P.O. BOX 93786,
PASADENA, CA 91109
T: 818-437-8452

PROJECT:
MADRONA MARSH NATURE CENTER IMPROVEMENTS

ADDRESS
3201 PLAZA DEL AMO BOULEVARD TORRANCE, CA 90503

DRAWING TITLE
GENERAL NOTES

PRINT DATE: 03/18/2016
PROJECT NUMBER: XXXX
APPLICATION NUMBER:
SHEET NUMBER
S001

O:\V & Y Engineers\V & Y Projects\C166-1395 Madrona Marsh Nature Center\Drawings\CAD\Sheets\S001.dwg 03/18/2016 11:17

EXISTING CONDITIONS NOTES:

1. FIELD VERIFY ALL CONDITIONS & DIMENSIONS PRIOR TO SHOP DRAWING PRODUCTION AND FABRICATION OF STRUCTURAL ELEMENTS.
2. WHERE ALL OTHER EXISTING CONDITIONS VARY SIGNIFICANTLY FROM THOSE SHOWN ON THESE DRAWINGS, THE STRUCTURAL ENGINEER SHALL BE NOTIFIED PRIOR TO CONTINUED CONSTRUCTION RELATED TO SUBJECT CONDITIONS.
3. SHORE ALL EXISTING CONSTRUCTION AS REQUIRED.
4. ALL EXISTING (E) CONNECTIONS AT ELEMENTS TO BE REPLACED SHALL BE REPLACED OR RE-ATTACHED TO MATCH EXISTING CONDITIONS.
5. VERIFY LOCATION OF EXISTING (E) REBAR BEFORE FABRICATION USING NON-DESTRUCTIVE TESTING.
6. SPECIAL INSPECTION IS REQUIRED FOR ALL WORK.
7. SEE "AS BUILT" DRAWINGS FOR EXISTING BUILDING DESIGN FOR ITEMS NOT SHOWN OR NOTED.
8. ALL EXISTING (E) WOOD ELEMENTS TO REMAIN SHALL BE FIELD INSPECTED DURING CONSTRUCTION AND TREATED FOR DRYROT REMOVAL / CONTROL. WHERE EXISTING GLB'S TO REMAIN ARE FOUND TO HAVE EXTENSIVE DRYROT DEEPER THAN THE TOP TWO LAMINATIONS (3"), THE STRUCTURAL ENGINEER SHALL BE NOTIFIED PRIOR TO CONTINUED CONSTRUCTION RELATED TO SUBJECT GLB'S.
9. PAINT ALL (N) & (E) GLBs W/EXTERIOR GRADE FINISH PER SPECIFICATIONS.

EXISTING UNDERGROUND UTILITY NOTES:

1. THE ARCHITECT AND ENGINEERS ARE NOT RESPONSIBLE FOR THE LOCATIONS OF EXISTING UNDERGROUND UTILITIES WHETHER OR NOT SHOWN ON THE DRAWINGS. THE LOCATION OF ANY EXISTING UNDERGROUND UTILITIES SHOWN ON THE DRAWINGS ARE APPROXIMATE. THE CONTRACTOR SHALL IMMEDIATELY NOTIFY THE OWNER SHOULD ANY SUCH UNIDENTIFIED CONDITIONS BE DISCOVERED.
2. THE CONTRACTOR SHALL BE RESPONSIBLE FOR ANY DAMAGES WHICH MAY RESULT FROM HIS FAILURE TO EXACTLY LOCATE AND PRESERVE ALL EXISTING UNDERGROUND UTILITIES.

CONTRACTOR RESPONSIBILITY NOTE:

1. EACH CONTRACTOR RESPONSIBLE FOR THE CONSTRUCTION OF A MAIN LATERAL-FORCE-RESISTING SYSTEM, DESIGNATED ON PLANS SHALL SUBMIT A WRITTEN STATEMENT OF RESPONSIBILITY TO THE BUILDING OFFICIAL AND THE OWNER PRIOR TO THE COMMENCEMENT OF WORK ON THE SYSTEM OR COMPONENT. THE CONTRACTOR'S STATEMENT OF RESPONSIBILITY SHALL CONTAIN THE FOLLOWING:
   A. ACKNOWLEDGMENT OF AWARENESS OF THE SPECIAL REQUIREMENTS.
   B. ACKNOWLEDGMENT THAT CONTROL WILL BE EXERCISED TO OBTAIN CONFORMANCE WITH THE CONSTRUCTION DOCUMENTS APPROVED BY THE BUILDING OFFICIAL.
   C. PROCEDURES FOR EXERCISING CONTROL WITHIN THE CONTRACTOR'S ORGANIZATION, THE METHOD AND FREQUENCY OF REPORTING AND THE DISTRIBUTION OF THE REPORTS.
   D. IDENTIFICATION AND QUALIFICATIONS OF THE PERSON(S) EXERCISING SUCH CONTROL AND THEIR POSITION(S) IN THE ORGANIZATION.

STRUCTURAL OBSERVATIONS

1. VISUAL OBSERVATIONS WILL BE PERFORMED AT THE DISCRETION OF THE OWNER, ARCHITECT, SEOR, AND AS REQUIRED BY THE BUILDING OFFICIAL IN ACCORDANCE WITH THE BUILDING CODE.
2. IT IS THE RESPONSIBILITY OF THE GENERAL CONTRACTOR TO NOTIFY THE STRUCTURAL ENGINEER AS TO WHEN EACH MAJOR PHASE OF CONSTRUCTION IS READY FOR OBSERVATION A MINIMUM OF FIVE (5) WORKING DAYS IN ADVANCE.
3. THE FOLLOWING MAJOR PHASES OF CONSTRUCTION REQUIRE A SITE VISIT AND STRUCTURAL OBSERVATION REPORT FROM THE SEOR:
   - FOUNDATION REBAR AND ANCHORS - PRIOR TO POUR OF CONCRETE
   - STRUCTURAL FRAMING - AFTER ERECTION AND PRIOR TO CLOSING IN
   - RAISED FLOOR SLABS AND REBAR - PRIOR TO POUR OF CONCRETE
   - ROOF NAILING - PRIOR TO INSTALLATION OF ROOFING AND CRICKETS
   - COMPLETION OF THE STRUCTURAL SYSTEM
4. THE CONTRACTOR SHALL BE RESPONSIBLE FOR ENSURING THAT NAILING, REINFORCEMENT, WELDS, CONNECTIONS, ETC. ARE VISIBLE FOR OBSERVATION WHEN THE SEOR IS ON SITE AND FOR ANY SCHEDULING DELAYS DUE TO NONCOMPLIANT ITEMS FOUND DURING THE OBSERVATION.

STATEMENT OF SPECIAL INSPECTIONS:

1. THE OWNER SHALL EMPLOY ONE OR MORE SPECIAL INSPECTORS TO PROVIDE INSPECTIONS DURING CONSTRUCTION. THE SPECIAL INSPECTOR SHALL BE A QUALIFIED PERSON WHO SHALL DEMONSTRATE COMPETENCE, TO THE SATISFACTION OF THE BUILDING OFFICIAL, FOR INSPECTION OF THE PARTICULAR TYPE OF CONSTRUCTION OR OPERATION REQUIRING SPECIAL INSPECTION.
2. SPECIAL INSPECTIONS ARE NOT REQUIRED WHERE THE WORK IS DONE ON THE PREMISES OF A FABRICATOR REGISTERED AND APPROVED TO PERFORM SUCH WORK WITHOUT SPECIAL INSPECTION. APPROVED FABRICATORS MUST SUBMIT A CERTIFICATE OF COMPLIANCE FOR OFFSITE FABRICATIONS SUCH AS STRUCTURAL STEEL, PRECAST CONCRETE, GLUED LAMINATED TIMBER, ETC.
3. ALL INSPECTIONS SHALL BE PERFORMED BY INDEPENDENT SPECIAL INSPECTORS. JOB SITE VISITS BY THE STRUCTURAL ENGINEER OR BUILDING OFFICIAL DO NOT CONSTITUTE AND ARE NOT A SUBSTITUTE FOR INSPECTIONS BY A SPECIAL INSPECTOR.
4. ALL INSPECTION REPORTS SHALL BE SUBMITTED TO THE BUILDING OFFICIAL AND SEOR. THE FINAL REPORTS BY THE SPECIAL INSPECTOR(S) MUST CERTIFY THAT THE ENTIRE STRUCTURAL SYSTEM COMPLIES WITH THE APPROVED PLANS AND SPECIFICATIONS.
5. IT IS SOLELY THE CONTRACTOR'S RESPONSIBILITY TO SEE THAT THESE INSPECTIONS ARE PERFORMED.
6. WORK REQUIRING SPECIAL INSPECTION SHALL BE INSPECTED BY THE SPECIAL INSPECTOR WHO IS PRESENT IN THE AREA WHERE THE WORK IS PERFORMED AND AT THE COMPLETION OF WORK. CONTINUOUS INSPECTION CONSISTS OF FULL-TIME INSPECTION; PERIODIC INSPECTION CONSISTS OF PART-TIME OR INTERMITTENT INSPECTION.
7. THE FOLLOWING SPECIAL INSPECTIONS ARE IN ADDITION TO INSPECTIONS BY THE BUILDING OFFICIAL. THIS LIST IS NOT INTENDED TO BE ALL INCLUSIVE.

TABLE 1704.3

REQUIRED VERIFICATION AND INSPECTION OF STEEL CONSTRUCTION

VERIFICATION AND INSPECTION	CONTINUOUS	PERIODIC	REFERENCED STANDARD	CBC REFERENCE
1. MATERIAL VERIFICATION OF HIGH-STRENGTH BOLTS, NUTS AND WASHERS:				
A. IDENTIFICATION MARKINGS TO CONFORM TO ASTM STANDARDS SPECIFIED IN THE APPROVED CONSTRUCTION DOCUMENTS.	-	X	AISC 360, SECTION A3.3 AND APPLICABLE ASTM MATERIAL STANDARDS	-
B. MANUFACTURER'S CERTIFICATE OF COMPLIANCE REQUIRED.	-	X	-	-
2. INSPECTION OF HIGH-STRENGTH BOLTING:				
A. SNUG-TIGHT JOINTS.	-	X	AISC 360, SECTION M2.5	1704.3.3
B. PRETENSIONED AND SLIP-CRITICAL JOINTS USING TURN-OF-NUT WITH MATCH MARKING, TWIST-OFF BOLT OR DIRECT TENSION INDICATOR METHODS OF INSTALLATION.	-	X		
C. PRETENSIONED AND SLIP-CRITICAL JOINTS USING TURN-OF-NUT WITHOUT MATCH MARKING OR CALIBRATED WRENCH METHODS OF INSTALLATION.	X	-		
3. MATERIAL VERIFICATION OF STRUCTURAL STEEL AND COLD-FORMED STEEL DECK:				
A. FOR STRUCTURAL STEEL, IDENTIFICATION MARKINGS TO CONFORM TO AISC 360.	-	X	AISC 360, SECTION M5.5	
B. FOR OTHER STEEL. IDENTIFICATION MARKINGS TO CONFORM TO ASTM STANDARDS SPECIFIED IN THE APPROVED CONSTRUCTION DOCUMENTS.	-	X	APPLICABLE ASTM MATERIAL STANDARDS	
C. MANUFACTURER'S CERTIFIED TEST REPORTS.	-	X		
4. MATERIAL VERIFICATION OF WELD FILLER MATERIALS:				
A. IDENTIFICATION MARKINGS TO CONFORM TO AWS SPECIFICATION IN THE APPROVED CONSTRUCTION DOCUMENTS.	-	X	AISC 360, SECTION A3.5 AND APPLICABLE AWS A5 DOCUMENTS	-
B. MANUFACTURER'S CERTIFICATE OF COMPLIANCE REQUIRED.	-	X	-	-
5. INSPECTION OF WELDING:				
A. STRUCTURAL STEEL AND COLD-FORMED STEEL DECK:				
1) COMPLETE AND PARTIAL JOINT PENETRATION GROOVE WELDS.	X	-	AWS D1.1	1704.3.1
2) MULTIPASS FILLET WELDS.	X	-		
3) SINGLE-PASS FILLET WELDS > 5/16"	X	-		
4) PLUG AND SLOT WELDS.	X	-		
5) SINGLE-PASS FILLET WELDS < 5/16"	-	X		
6) FLOOR AND ROOF DECK WELDS.	-	X	AWS D1.3	
B. REINFORCING STEEL.				
1) VERIFICATION OF WELDABILITY OF REINFORCING STEEL OTHER THAN ASTM A 706.	-	X	AWS D1.4 ACI318: SECTION 3.5.2	-
2) REINFORCING STEEL RESISTING FLEXURAL AND AXIAL FORCES IN INTERMEDIATE AND SPECIAL MOMENT FRAMES, AND BOUNDARY ELEMENTS OF SPECIAL STRUCTURAL WALLS OF CONCRETE AND SHEAR REINFORCEMENT.	X	-		
3) SHEAR REINFORCEMENT.	X	-		
4) OTHER REINFORCING STEEL.	-	X		
6. INSPECTION OF STEEL FRAME JOINT DETAILS FOR COMPLIANCE.				
A. DETAILS SUCH AS BRACING AND STIFFENING.	-	X	-	1704.3.2
B. MEMBER LOCATIONS.	-	X		
C. APPLICATION OF JOINT DETAILS AT EACH CONNECTION.	-	X		

TABLE 1705.3

REQUIRED VERIFICATION AND INSPECTION OF CONCRETE CONSTRUCTION

VERIFICATION AND INSPECTION	CONT.	PERIODIC	REFERENCE STANDARD [a]	CBC REF.
1. INSPECTION OF REINFORCING STEEL, INCLUDING PRESTRESSING TENDONS, AND PLACEMENT.	-	X	AIC 318: 3.5, 7.1-7.7	1913.4
2. INSPECTION OF REINFORCING STEEL WELDING IN ACCORDANCE WITH TABLE 1704A.3, ITEM 5B.	-	-	AWS D1.4; ACI 318: 3.5.2	-
3. INSPECTION OF BOLTS TO BE INSTALLED IN CONCRETE PRIOR TO AND DURING PLACEMENT OF CONCRETE WHERE ALLOWABLE LOADS HAVE BEEN INCREASED OR WHERE STRENGTH DESIGN IS USED.	X	-	ACI 318: 8.1.3, 21.2.8	1911.5, 1912.1
4. INSPECTION OF ANCHORS INSTALLED IN HARDENED CONCRETE. [b]	-	X	ACI 318: 3.8.6, 8.1.3, 21.2.8	1912.1
5. VERIFYING USE OF REQUIRED DESIGN MIX.	-	X	ACI 318: CH 4, 5.2-5.4	1904.2.2, 1913.2, 1913.3
6. AT THE TIME FRESH CONCRETE IS SAMPLED TO FABRICATE SPECIMENS FOR STRENGTH TESTS, PERFORM SLUMP AND AIR CONTENT TESTS, AND DETERMINE THE TEMPERATURE OF THE CONCRETE.	X	-	ASTM C172 ASTM C31; ACI 318: 5.6, 5.8	1913.10
7. INSPECTION OF CONCRETE AND SHOTCRETE PLACEMENT FOR PROPER APPLICATION TECHNIQUES.	X	-	ACI 318: 5.9, 5.10	1913.6, 1913.7, 1913.8
8. INSPECTION FOR MAINTENANCE OF SPECIFIED CURING TEMPERATURE AND TECHNIQUES.	-	X	ACI 318: 5.11-5.13	1913.9
9. INSPECTION OF PRESTRESSED CONCRETE:				
A. APPLICATION OF PRESTRESSING FORCES.	X	-	ACI 318: 18.20	-
B. GROUTING OF BONDED PRESTRESSING TENDONS IN THE SEISMIC-FORECE-RESISTING SYSTEM.	X	-	ACI 318: 18.18.4	-
10. ERECTION OF PRECAST CONCRETE MEMBERS.	-	X	ACI 318: CH 16	-
11. VERIFICATION OF IN-SITU CONCRETE STRENGTH, PRIOR TO STRESSING OF TENDONS IN POSTTENSIONED CONCRETE AND PRIOR TO REMOVAL OF SHORES AND FORMS FROM BEAMS AND STRUCTURAL SLABS.	-	X	ACI 318: 6.2	-
12. INSPECT FORMWORK FOR SHAPE, LOCATION AND DIMENSIONS OF THE CONCRETE MEMBER BEING FORMED. [c]	-	X	ACI 318: 6.1.1	-

FOR SI: 1 INCH = 25.4 MM

a. WHERE APPLICABLE, SEE ALSO SECTION 1705.11, SPECIAL INSPECTIONS FOR SEISMIC RESISTANCE.

b. SPECIFIC REQUIREMENTS FOR SPECIAL INSPECTIONS SHALL BE INCLUDED IN THE RESEARCH REPORT FOR THE ANCHOR ISSUED BY AN APPROVED SOURCE IN ACCORDANCE WITH ACI 355.2 OR SHALL BE APPROVED BY THE BUILDING OFFICIAL PRIOR TO COMMENCEMENT OF THE WORK.

c. INSTALLATION OFF ALL ADHESIVE ANCHORS IN THE HORIZONTAL AND UPWARDS INCLINED POSITIONS SHALL BE PERFORMED BY AN ACI/CRSI CERTIFIED ANCHOR INSTALLER.

TABLE 1705.6

REQUIRED VERIFICATION AND INSPECTION OF SOILS

VERIFICATION AND INSPECTION TASK	CONTINUOUS DURING TASK LISTED	PERIODICALLY DURING TASK LISTED
1. VERIFY MATERIALS BELOW SHALLOW FOUNDATIONS ARE ADEQUATE TO ACHIEVE THE DESIGN BEARING CAPACITY.	-	X
2. VERIFY EXCAVATIONS ARE EXTENDED TO PROPER DEPTH AND HAVE REACHED PROPER MATERIAL.	-	X
3. PERFORM CLASSIFICATION AND TESTING OF COMPACTED FILL MATERIALS.	-	X
4. VERIFY USE OF PROPER MATERIALS, DENSITIES AND LIFT THICKNESSES DURING PLACEMENT AND COMPACTION OF COMPACTED FILL.	X	-
5. PRIOR TO PLACEMENT OF COMPACTED FILL, OBSERVE SUBGRADE AND VERIFY THAT SITE HAS BEE N PREPARED PROPERLY.	-	X

TYPICAL ABBREVIATIONS

AB	ANCHOR BOLT
ABV	ABOVE
ADDL	ADDITIONAL
ADJ	ADJACENT
AFF	ABOVE FINISH FLOOR
ALT	ALTERNATE
ARCH	ARCHITECT(URAL)
BLDG	BUILDING
BLKG	BLOCKING
BLW	BELOW
BM	BEAM
BN	BOUNDARY NAILING
B.O.	BOTTOM OF
BOTT	BOTTOM
BRG	BEARING
BS	BOTH SIDES
BTWN	BETWEEN
C	CAMBER
CIP	CAST IN PLACE
CJ	CONTROL/ CONSTRUCTION JOINT
CL	CENTERLINE
CLR	CLEAR
CMU	CONCRETE MASONRY UNIT
COL	COLUMN
CONC	CONCRETE
CONN	CONNECTION
CONT	CONTINUOUS
CP	COMPLETE PENETRATION
CSK	COUNTERSINK
CTR(D)	CENTER(ED)
D_B	BAR OR BOLT DIAMETER
DBL	DOUBLE
DEMO	DEMOLITION
DET	DETAIL
DIA	DIAMETER
DIAG	DIAGONAL
DIM	DIMENSION
DO	DITTO
DWG	DRAWING
(E)	EXISTING
EA	EACH
EF	EACH FACE
EJ	EXPANSION JOIST
EMBED	EMBEDMENT
ELEC	ELECTRICAL
ELEV	ELEVATION
EN	EDGE NAILING
E.O.	EDGE OF
EOR	ENGINEER OF RECORD
EQ	EQUAL
EQUIP	EQUIPMENT
ES	EACH SIDE OR EDGE SCREW
EW	EACH WAY
EXP	EXPANSION
EXT	EXTERIOR
FIN	FINISH
FLR	FLOOR
FN	FIELD NAILING
FND	FOUNDATION
F.O.	FACE OF
FS	FAR SIDE OR FIELD SCREW
FRMG	FRAMING
FT	FOOT OR FEET
FTG	FOOTING
G	GIRDER
GA	GAGE
GALV	GALVANIZED
HAB	HEADED ANCHOR BOLT
HD	HOLDDOWN
HDR	HEADER
HGR	HANGER
HK	HOOK
HORIZ	HORIZONTAL
HP	HIGH POINT
HS	HIGH STRENGTH
HSS	HOLLOW STRUCTURAL STEEL
HT	HEIGHT

IN	INCH
INT	INTERIOR
JST	JOIST
KLF	KIPS PER LINEAR FOOT
KSL	KIPS PER SQUARE FOOT
KSI	KIPS PER SQUARE INCH
L	ANGLE
LFRS	LATERAL FORCE RESISTING SYSTEM
LLH	LONG LEG HORIZONTAL
LLV	LONG LEG VERTICAL
LP	LOW POINT
LWC	LIGHTWEIGHT CONCRETE
MAX	MAXIMUM
MB	MACHINE BOLT
MECH	MECHANICAL
MFR	MANUFACTURER
MIN	MINIMUM
MTL	METAL
(N)	NEW
NS	NEAR SIDE OR NON-SHRINK
NTS	NOT TO SCALE
NWC	NORMAL WEIGHT CONCRETE
OC	ON CENTER
O.F.	OUTSIDE FACE
OH	OPPOSITE HAND
OPNG	OPENING
PDF	POWDER DRIVEN FASTENER
PJ	PANEL JOIST
PL	PLATE
PLC(S)	PLACE(S)
PLF	POUND PER LINEAR FOOT
PLYWD	PLYWOOD
PREFAB	PREFABRICATED
PSF	POUND PER SQUARE FOOT
PSI	POUND PER SQUARE INCH
PT	PRESSURE TREATED OR POST TENSION
QTY	QUANTITY
RAD, R	RADIUS
REF	REFERENCE
REINF	REINFORCING
REQD	REQUIRED
SB	SILL BOLT
SC	SAW CUT OR SLIP CRITICAL
SCHED	SCHEDULE
SEOR	STRUCTURAL ENGINEER ON RECORD
SHTG	SHEATHING
SIM	SIMILAR
SMS	SHEET METAL SCREW
SN	SILL NAIL
SOG	SLAB ON GRADE
SQ	SQUARE
SS	STAINLESS STEEL
STD	STANDARD
STGRD	STAGGERED
STIFF	STIFFENER
STL	STEEL
STRUCT	STRUCTURAL
T&B	TOP AND BOTTOM
THK	THICK
T.O.	TOP OF
TYP	TYPICAL
UNO	UNLESS NOTED OTHERWISE
VERT	VERTICAL
W/	WITH
W/O	WITHOUT
WF	WIDE FLANGE
WLD	WELDED
WO	WHERE OCCURS
WP	WORK POINT
WT	WEIGHT
WWF	WELDED WIRE FABRIC

Ø = DIAMETER

⌖ = REFERENCE ELEVATION OR WORK POINT

REGISTERED PROFESSIONAL ENGINEER
YOUNG-KEUN NAM
No. S4029
Exp. 9/30/16
STRUCTURAL
STATE OF CALIFORNIA

NO.	REVISIONS	DATE
1	DESIGN DEVELOPMENT PACKAGE	2/17/16
2	CONSTRUCTION DOCUMENT PACKAGE	3/18/16
3	PLAN CHECK SUBMITTAL	3/18/16

VCA ENGINEERS INC
CIVIL • STRUCTURAL
Quality Service Commitment
MBE • DBE • SBE
2151 Michelson Dr. #240
Irvine, CA 92612
Tel. 949.679.0870
Fax. 949.679.9370
Project No. C166

SAA ASSOCIATES
Architecture Development Management
SAA ASSOCIATES
P.O. BOX 93786,
PASADENA, CA 91109
T: 818-437-8452

PROJECT:
MADRONA MARSH NATURE CENTER IMPROVEMENTS

ADDRESS
3201 PLAZA DEL AMO BOULEVARD TORRANCE, CA 90503

DRAWING TITLE
GENERAL NOTES

PRINT DATE: 03/18/2016

PROJECT NUMBER: XXXX

APPLICATION NUMBER:

SHEET NUMBER
S002

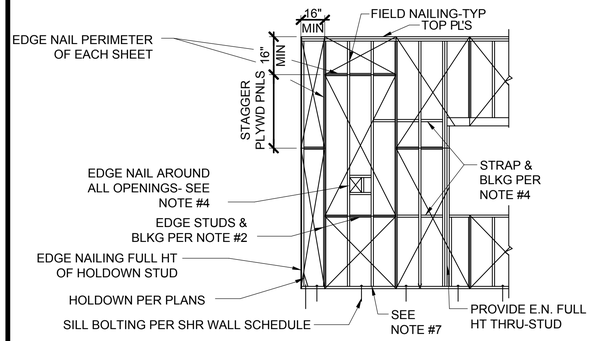

NOTES:
1. NAIL EDGE DISTANCE SHALL BE 3/8' FROM EDGE OF PLYWOOD AND EDGE OF 2x STUDS AND BLOCKING.
2. PROVIDE EDGE STUDS AND BLOCKING PER SHEAR WALL SCHEDULE.
3. NAIL EDGE DISTANCE SHALL BE 5/8" FROM EDGE OF PLYWOOD AND EDGE OF 3x STUDS AND BLOCKING.
4. PROVIDE EDGE NAILING AROUND ALL OPENINGS. WHERE OPENING WIDTH EXCEEDS ONE STUD SPACE, PROVIDE CS150 COILED STRAP EACH SIDE OF OPENING WITH 10d @ 4" O/C. STRAP LENGTH SHALL EQUAL OPENING WIDTH/3 WITH STRAP CENTER AT JAMB STUD. STRAP LENGTH NEED NOT EXCEED 8'-0" AND MAY BE OMITTED AT CORNER (END OF WALL) COND'N. WHERE NON-CONT HEADERS OCCUR AT ADJACENT OPENINGS PROVIDE CS150 ACROSS HEADERS WITH LENGTH BASED ON LARGER OPENING (STRAP NOT REQ'D AT CONTINUOUS HEADERS).
5. MACHINE APPLIED NAILING IS SUBJECT TO APPROVAL BY THE STRUCTURAL ENGINEER.
6. ALL DEFECTIVE NAILING SHALL BE REMOVED AND REPLACED BY SOUND NAILING.
7. PROVIDE FULL HEIGHT EDGE NAILING WHERE POST OR STEEL COLUMN WITH NAILERS OCCURS WITHIN WALL.

10 DETAIL
SCALE: N.T.S.

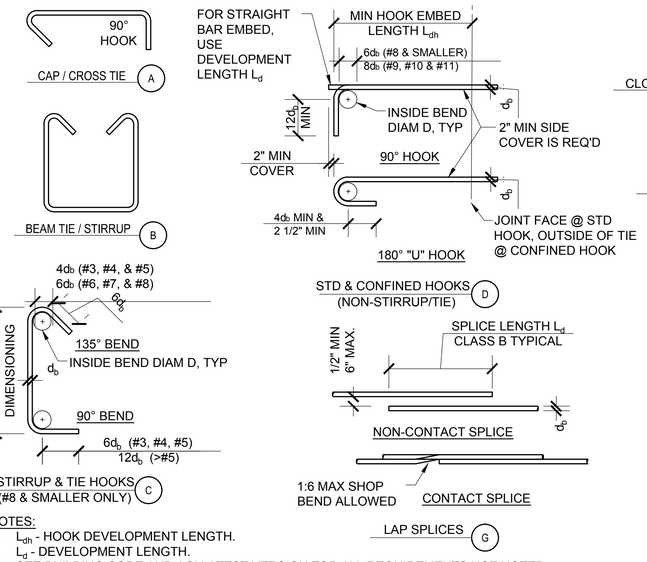

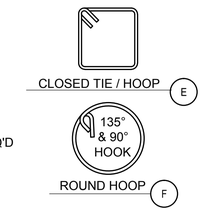

BAR SIZE	FINISHED BEND DIAMETER D IN INCHES
#9	9 1/2"
#10	10 3/4"
#11	12"
#14	18 1/4"
#18	24"

STANDARD HOOKS

	BAR SIZE	STD HOOK L_{dh} (in)	CONFINED HOOK L_{dh} (in)	CLASS B LAP SPLICE L_d (in)		DEVELOPMENT LENGTH L_d (in)	
				BOT	TOP	BOT	TOP
3000 PSI NWC	#3	6	6	22	28	I7	22
	#4	8	6	29	37	22	29
	#5	10	8	36	47	28	36
	#6	12	10	43	56	33	43
	#7	14	11	63	81	48	63
	#8	16	13	72	93	55	72
	#9	18	14	81	105	62	81
	#10	20	16	91	118	70	91
	#11	22	18	101	131	78	101

NOTES:
1. L_{dh} - HOOK DEVELOPMENT LENGTH.
2. L_d - DEVELOPMENT LENGTH.
3. SEE BUILDING CODE AND ACI LATEST VERSION FOR ALL REQUIREMENTS NOT NOTED.
4. FOR LIGHTWEIGHT CONCRETE MULTIPLY L_{dh} AND L_d VALUES SHOWN BY 1.3.
5. "TOP" BARS ARE HORIZONTAL WITH MORE THAN 12" OF FRESH CONCRETE CAST BELOW BARS. ALL OTHER BARS ARE "BOT" BARS.
6. STD HOOK L_{dh} DOES NOT ACCOUNT FOR THE EFFECT OF TIES. CONFINED HOOK L_{dh} MAY BE USED WHERE ACI 318-11 12.5.3b-c APPLIES.
7. VALUES SHOWN ABOVE ARE FOR GRADE 60 (FY=60 KSI) REINFORCEMENT.
8. SPLICE LENGTHS SHOWN ARE FOR CLEAR SPACING NOT LESS THAN $2D_b$, CONCRETE COVER NOT LESS THAN D_b.
9. FOR EPOXY-COATED REINFORCEMENT, SEE BUILDING CODE

5 DETAIL
SCALE: N.T.S.

11 DETAIL
SCALE: N.T.S.

12 DETAIL
SCALE: N.T.S.

9 DETAIL
SCALE: N.T.S.

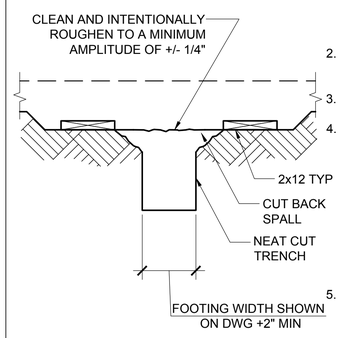

NOTES:
1. FOOTINGS POURED AGAINST EARTH ARE SUBJECT TO APPROVAL OF GEOTECHNICAL ENGINEER.
2. FOOTING WIDTHS SHALL NOT BE MORE THAN 4" WIDER THAN SHOWN ON PLAN.
3. FORMWORK NOT PERMITTED BELOW GRADE.
4. FOUNDATION CONCRETE MAY BE PLACED DIRECTLY INTO NEAT EXCAVATIONS PROVIDED THE FOUNDATION TRENCH WALLS ARE STABLE AS DETERMINED BY THE GEOTECHNICAL ENGINEER. THE 2x12 SHOWN IS MANDATORY TO ENSURE CLEAN EXCAVATIONS IMMEDIATELY PRIOR TO AND DURING THE PLACING OF CONCRETE.
5. STAKES NOT PERMITTED IN THE FOOTING AREA.

6 DETAIL
SCALE: N.T.S.

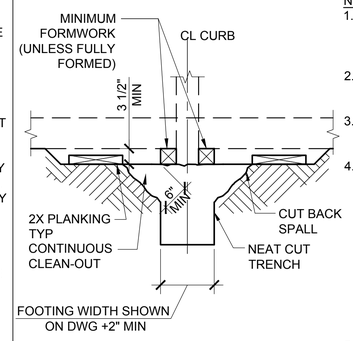

NOTES:
1. FOOTINGS POURED AGAINST EARTH ARE SUBJECT TO APPROVAL OF GEOTECHNICAL ENGINEER.
2. FOOTING WIDTHS SHALL NOT BE MORE THAN 4" WIDER THAN SHOWN ON PLAN.
3. FORMWORK NOT PERMITTED BELOW GRADE UNLESS FULLY FORMED.
4. FOUNDATION CONCRETE MAY BE PLACED DIRECTLY INTO NEAT EXCAVATIONS PROVIDED THE FOUNDATION TRENCH WALLS ARE STABLE AS DETERMINED BY THE GEOTECHNICAL ENGINEER. THE MINIMUM FORMWORK SHOWN ON THE DRAWINGS IS MANDATORY TO ENSURE CLEAN EXCAVATIONS IMMEDIATELY PRIOR TO AND DURING THE PLACING OF CONCRETE.
5. CONT CLEAN-OUT STAKES NOT PERMITTED IN THE FTG AREA.
6. AFTER CONCRETE HAS SET, REMOVE LAITANCE AND SCUM.

3 DETAIL
SCALE: N.T.S.

REGISTERED PROFESSIONAL ENGINEER
VIJAY K.E.UN. RAJAN
No. S4029
Exp. 9/30/16
STRUCTURAL
STATE OF CALIFORNIA

NO.	REVISIONS	DATE
1	DESIGN DEVELOPMENT PACKAGE	2/17/16
2	CONSTRUCTION DOCUMENT PACKAGE	3/18/16
3	PLAN CHECK SUBMITTAL	3/18/16

V C A ENGINEERS INC.
CIVIL • STRUCTURAL
2151 Michelson Dr. #240
Irvine, CA 92612
Tel. 949.679.0870
Fax. 949.679.9370
Project No. C166

Architecture Development Management
SAA ASSOCIATES
SAA ASSOCIATES
P.O. BOX 93786,
PASADENA, CA 91109
T: 818-437-8452

PROJECT:
MADRONA MARSH NATURE CENTER IMPROVEMENTS

ADDRESS:
3201 PLAZA DEL AMO BOULEVARD TORRANCE, CA 90503

DRAWING TITLE:
TYPICAL DETAILS

PRINT DATE: 03/18/2016
PROJECT NUMBER: XXXX
APPLICATION NUMBER:
SHEET NUMBER
S101

O:\V & Y Engineers\V & Y Projects\C166-1395 Madrona Marsh Nature Center\Drawings\CAD\Sheets\S101.dwg 03/18/2016 11:18

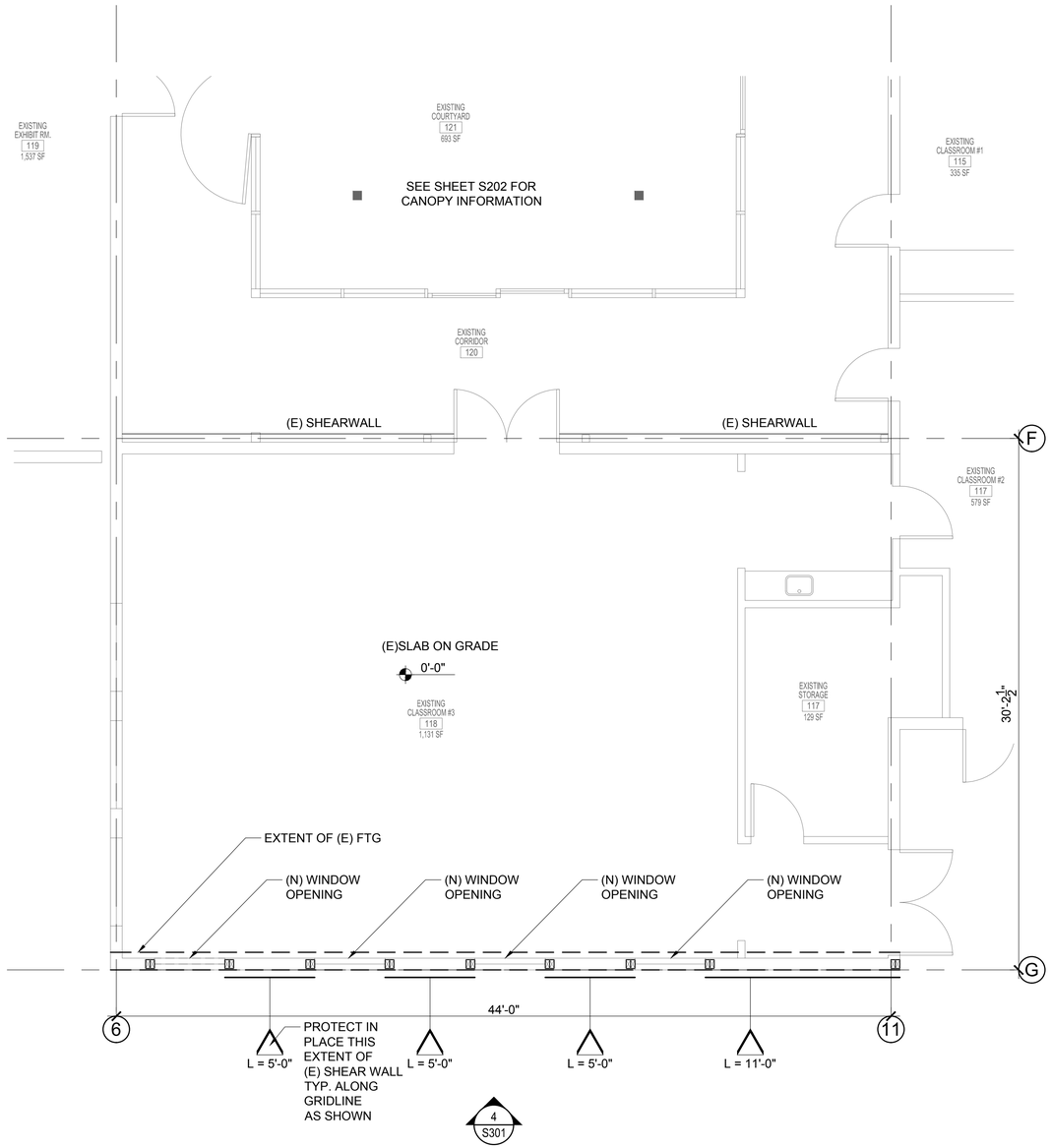

PARTIAL FOUNDATION PLAN
SCALE: 1/4" = 1'-0"

TRUE NORTH

REFERENCE NORTH

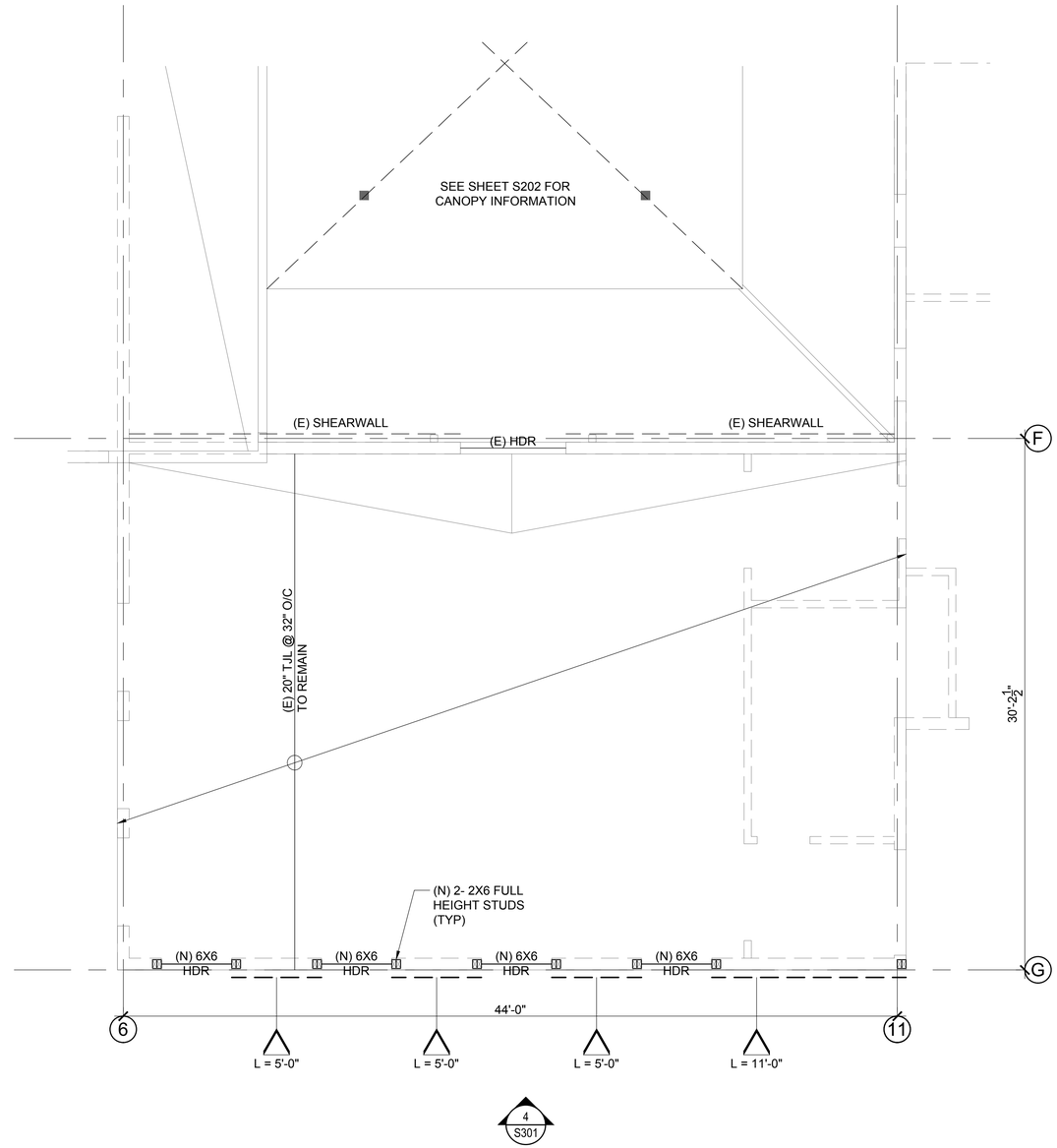

PARTIAL ROOF PLAN
SCALE: 1/4" = 1'-0"

TRUE NORTH

REFERENCE NORTH

REGISTERED PROFESSIONAL ENGINEER
VIJAY K. EUN
No. S4029
Exp. 9/30/16
Structural
STATE OF CALIFORNIA

NO.	REVISIONS	DATE
1	DESIGN DEVELOPMENT PACKAGE	2/17/16
2	CONSTRUCTION DOCUMENT PACKAGE	3/18/16
3	PLAN CHECK SUBMITTAL	3/18/16

VCA ENGINEERS INC.
CIVIL • STRUCTURAL
MBE DBE SBE
2151 Michelson Dr. #240
Irvine, CA 92612
Tel. 949.679.0870
Fax. 949.679.9370
Project No. C166

SAA ASSOCIATES
Architecture Development Management
SAA ASSOCIATES
P.O. BOX 93786,
PASADENA, CA 91109
T: 818-437-8452

PROJECT:
MADRONA MARSH NATURE CENTER IMPROVEMENTS

ADDRESS:
3201 PLAZA DEL AMO BOULEVARD TORRANCE, CA 90503

DRAWING TITLE
PARTIAL ROOF FRAMING AND FOUNDATION PLAN

PRINT DATE: 03/18/2016
PROJECT NUMBER: XXXX
APPLICATION NUMBER:
SHEET NUMBER
S201

O:\V & Y Engineers\V & Y Projects\C166-395 Madrona Marsh Nature Center\Drawings\CAD\Sheets\S201.dwg 03/18/2016 11:18

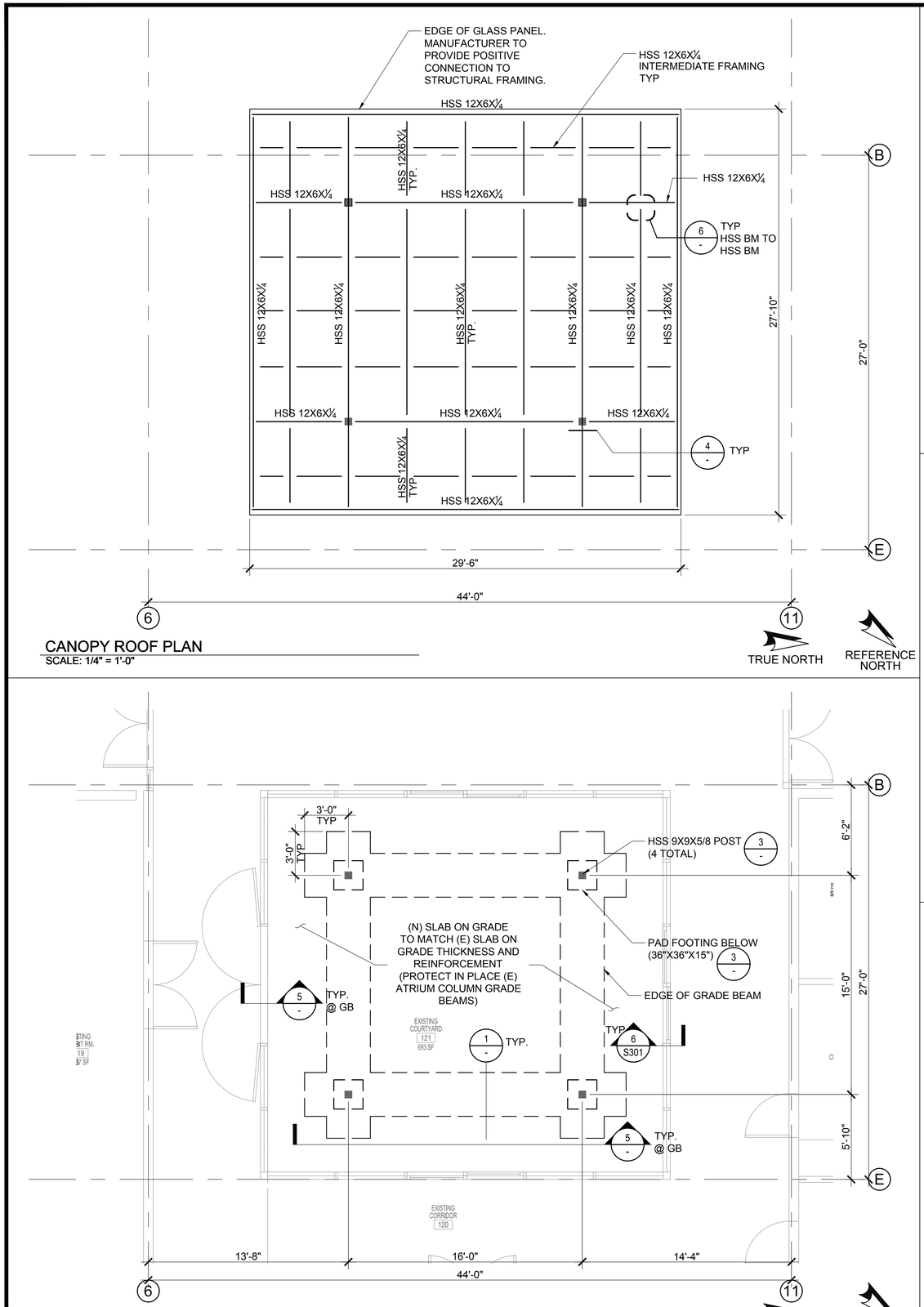

CANOPY ROOF PLAN
SCALE: 1/4" = 1'-0"

CANOPY FOUNDATION PLAN
SCALE: 1/4" = 1'-0"

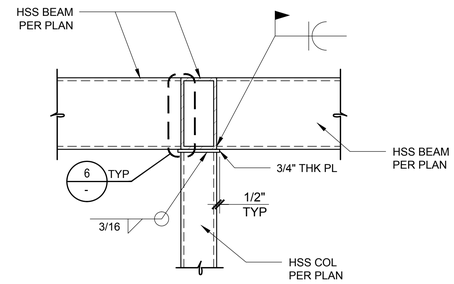

4 HSS BEAM TO HSS COLUMN CONNECTION
SCALE: N.T.S.

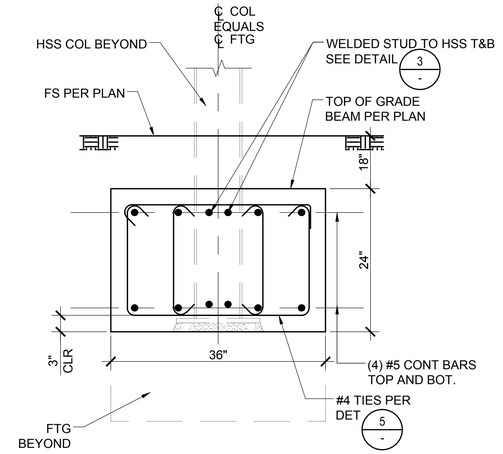

1 DETAIL
SCALE: N.T.S.

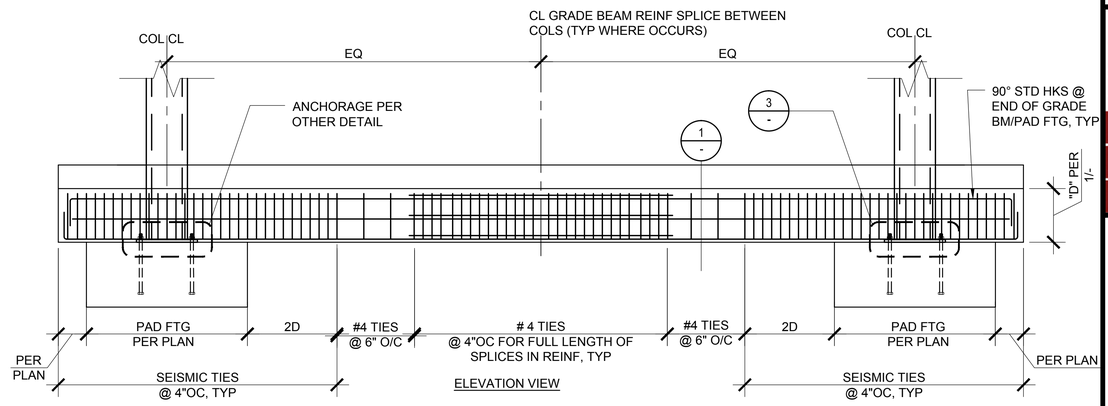

NOTES:
1. #4 SEISMIC TIES: SEE ELEV. ABOVE WHERE 4" SPACING IS REQD.
2. ALL REINFORCEMENT SHALL BE ASTM A706.
3. TYP SEISMIC TIE: ALTERNATE CAP TIE
4. TYPE 2 MECHANICAL COUPLERS MAY BE USED IN LIEU OF LAP SPLICES @ GRADE BEAM REINF. (ICC ESR 1764)

5 DETAIL
SCALE: N.T.S.

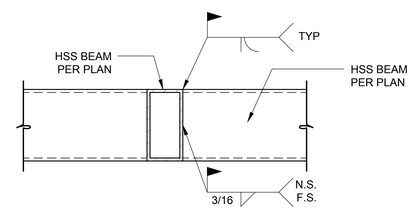

6 HSS BEAM TO HSS BEAM CONNECTION
SCALE: N.T.S.

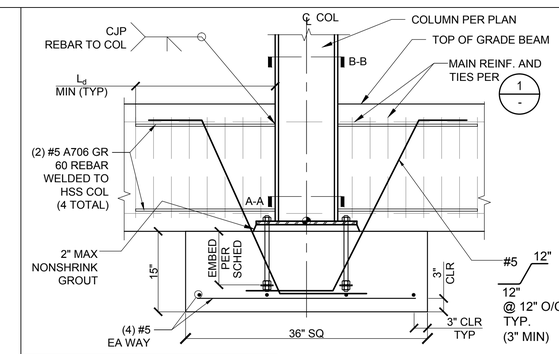

COLUMN BASE PLATE SCHEDULE					
COLUMN SIZE	BASE PLATE			ANCHOR ROD	
	B (in)	N (in)	t (in)	DIA	EMBED(in) DEPTH
HSS9X9	15	15	3/4	(4)3/4"Ø	8"(MIN)

NOTE:
1. HSS COL BASE PLATES SHALL BE ASTM 36.
2. ANCHOR RODS SHALL BE ASTM F1554 GR 36.

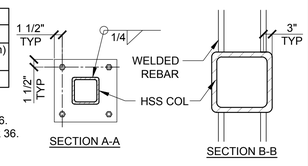

3 DETAIL
SCALE: N.T.S.

REGISTERED PROFESSIONAL ENGINEER — VIJAY K. EUN — No. S4029 — Exp. 9/30/16 — Structural — STATE OF CALIFORNIA

NO.	REVISIONS	DATE
1	DESIGN DEVELOPMENT PACKAGE	2/17/16
2	CONSTRUCTION DOCUMENT PACKAGE	3/18/16
3	PLAN CHECK SUBMITTAL	3/18/16

VCA ENGINEERS INC.
CIVIL • STRUCTURAL
2151 Michelson Dr. #240
Irvine, CA 92612
Tel. 949.679.0870
Fax. 949.679.9370
Project No. C166

SAA ASSOCIATES
Architecture Development Management
SAA ASSOCIATES
P.O. BOX 93786,
PASADENA, CA 91109
T: 818-437-8452

PROJECT: MADRONA MARSH NATURE CENTER IMPROVEMENTS

ADDRESS: 3201 PLAZA DEL AMO BOULEVARD TORRANCE, CA 90503

DRAWING TITLE: CANOPY ROOF FRAMING AND FOUNDATION PLAN

PRINT DATE: 03/18/2016
PROJECT NUMBER: XXXX
APPLICATION NUMBER:
SHEET NUMBER: S202

O:\V & V Engineers\V & V Projects\C166-1395 Madrona Marsh Nature Center\Drawings\CAD\Sheets\S202.dwg 03/18/2016 11:18

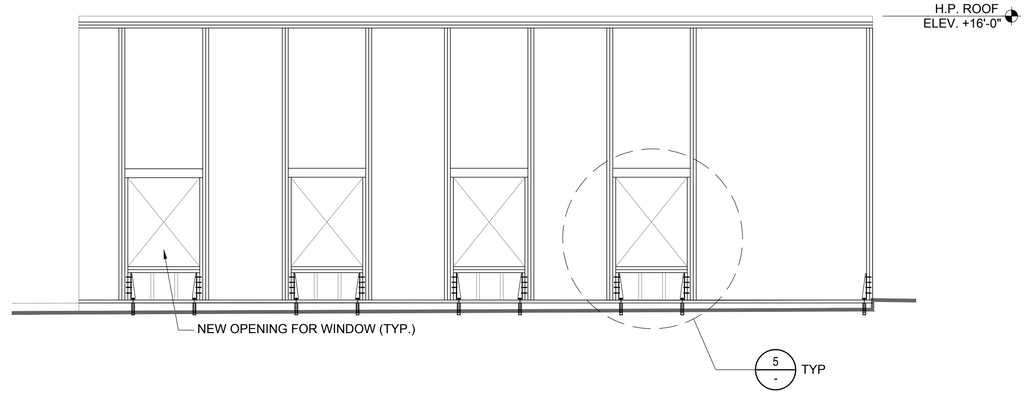

4 DETAIL
SCALE: N.T.S.

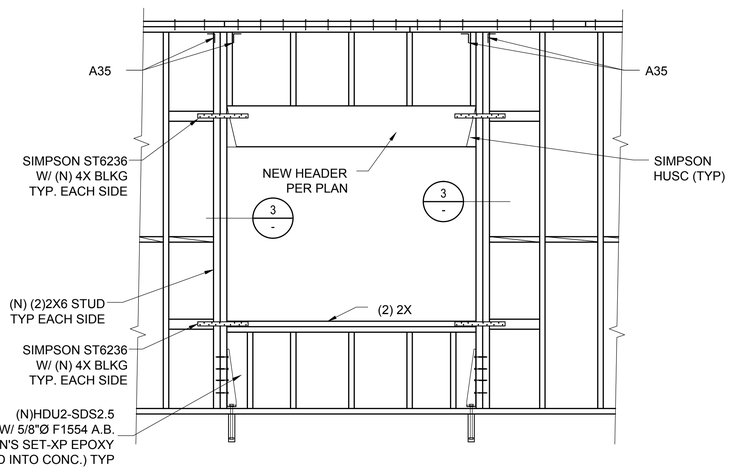

5 DETAIL
SCALE: N.T.S.

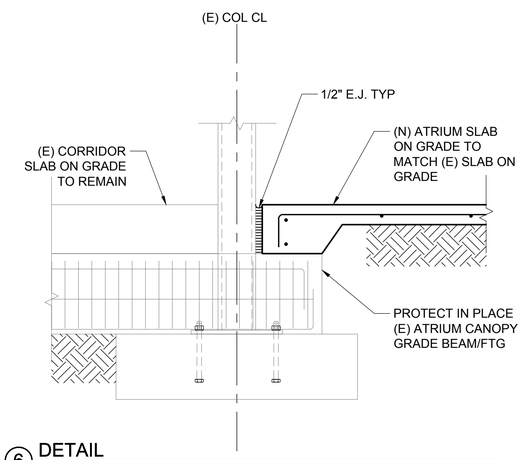

6 DETAIL
SCALE: N.T.S.

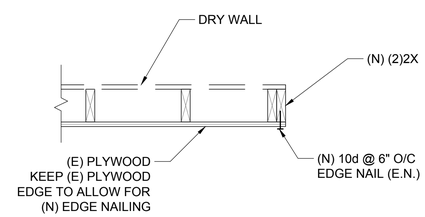

PLAN VIEW

3 DETAIL
SCALE: N.T.S.

REGISTERED PROFESSIONAL ENGINEER
VIJAYA K.E.UN. NAYAR
No. S4029
Exp. 9/30/16
STRUCTURAL
STATE OF CALIFORNIA

NO.	REVISIONS	DATE
1	DESIGN DEVELOPMENT PACKAGE	2/17/16
2	CONSTRUCTION DOCUMENT PACKAGE	3/18/16
3	PLAN CHECK SUBMITTAL	3/18/16

V C A ENGINEERS INC.
CIVIL • STRUCTURAL
2151 Michelson Dr. #240
Irvine, CA 92612
Tel. 949.679.0870
Fax. 949.679.9370
Project No. C166

SAA ASSOCIATES
Architecture Development Management
SAA ASSOCIATES
P.O. BOX 93786,
PASADENA, CA 91109
T: 818-437-8452

PROJECT:
MADRONA MARSH NATURE CENTER IMPROVEMENTS

ADDRESS:
3201 PLAZA DEL AMO BOULEVARD TORRANCE, CA 90503

DRAWING TITLE:
CANOPY ROOF FRAMING AND FOUNDATION PLAN

PRINT DATE: 03/18/2016

PROJECT NUMBER: XXXX

APPLICATION NUMBER:

SHEET NUMBER
S301

O:\V & V Engineers\V & Y Projects\C166-1395 Madrona Marsh Nature Center\Drawings\CAD\Sheets\S301.dwg 03/18/2016 11:18

ELECTRICAL SYMBOL LIST

Symbol	Description
	CONDUIT RUN, CONCEALED IN CEILING, OR WALLS .
	CONDUIT RUN EXPOSED, WHERE NOTED ON DRAWINGS.
	CONDUIT RUN UNDERGROUND OR UNDER FLOOR.
	CONDUIT STUBBED OUT AND CAPPED. PULL LINE IN PLACE.
	CONDUIT STUBBED UP
	CONDUIT STUBBED DOWN
	EACH HOME RUN SHALL HAVE 1#12, 1#12N & 1#12G – 3/4"C (U.O.N.) MULTIPLE HOME RUNS SHALL BE A MAXIMUM OF 4#10, 4#10N & 2#10G IN 1"C (U.O.N.)
EM	CONDUIT AND WIRING ON EMERGENCY CIRCUIT
B–1,3	CONDUIT HOMERUN TO PANELBOARD. LETTER AND NUMERALS INDICATE ELECTRICAL PANEL AND CIRCUIT NUMBER.
	ISOLATED GROUND WIRE. RUN IN ADDITION TO REGULAR GROUND WIRE.
	SURFACE MOUNTED BRANCH CIRCUIT PANELBOARD.
	RECESSED BRANCH CIRCUIT PANELBOARD.
P1	PANEL DESIGNATION.
	RECESSED COMMUNICATION TERMINAL CABINET. REFER TO DRAWINGS AND SPECIFICATIONS.
	SURFACE MOUNTED COMMUNICATION TERMINAL CABINET. REFER TO DRAWINGS AND SPECIFICATIONS.
J	JUNCTION BOX IN ACCESSIBLE CEILING SPACE OR FLUSH IN WALL WITH BLANK COVER PLATE TO MATCH DEVICE PLATES."L" ADJACENT INDICATES LIGHTING SYSTEM JUNCTION BOX, "P" ADJACENT INDICATES POWER SYSTEM JUNCTION BOX TO BE REMOVED, "T" ADJACENT INDICATES SIGNAL SYSTEM JUNCTION BOX.
J	JUNCTION BOX FLUSH FLOOR MOUNTED.
J	JUNCTION BOX RECESSED IN WALL @ +18" A.F.F. U.N.O.
M	THREE PHASE FRACTIONAL OR INTEGRAL HORSEPOWER MOTOR. NUMERAL IN PLACE OF "M" INDICATES HORSEPOWER.
	SINGLE PHASE FRACTIONAL OR INTEGRAL HORSEPOWER MOTOR.
30AS	NON–FUSED DISCONNECT SWITCH. "AS" INDICATES SWITCH AMPERE RATING. 30A, 3P, U.N.O.
100AS / 60AFU F	FUSED DISCONNECT SWITCH. "AS" INDICATES SWITCH AMPERE RATING. "AFU" INDICATES FUSE AMPERE RATING.
	COMBINATION MAGNETIC MOTOR STARTER AND FUSED DISCONNECT
VFD II	COMBINATION MAGNETIC MOTOR STARTER AND FUSED DISCONNECT SWITCH. FUSE PER EQUIPMENT MANUFACTURER RECOMMENDATIONS. NUMERAL INDICATES NEMA STARTER SIZE. DEVICES SHALL BE LOCKABLE EXCEPT FOR MECHANICAL CONDENSING UNITS (CU'S & CRU'S).

NO SUBSCRIPT	–	FULL VOLTAGE, NON REVERSING
AT	–	AUTOTRANSFORMER REDUCED VOLTAGE
2S	–	TWO SPEED
VFD	–	VARIABLE FREQUENCY DRIVE

Symbol	Description
T	THERMOSTAT
	POWER DISTRIBUTION SWITCHBOARD, 3ø,4W SYSTEM UNLESS OTHERWISE NOTED. SEE PANEL SCHEDULES FOR TYPE AND DETAIL.
	BRANCH CIRCUIT PANELBOARD, 3ø,4W SYSTEM UNLESS NOTED OTHERWISE NOTED. SEE PANEL SCHEDULES FOR TYPE AND DETAIL.
VAV J	VARIABLE AIR VOLUME "VAV". PROVIDE 20A, 1P, 120V, HP RATED TOGGLE SWITCH FOR EACH EQUIPMENT. PROVIDE ADDITIONAL 3/4"C.O. FOR DDC CONTROL WIRING TO UNITARY CONTROLLER TO INTERFACE WITH BMS. COORDINATE WITH MECHANICAL FOR EXACT LOCATION, QUANTITY AND INSTALLATION REQUIREMENTS PRIOR TO BID.
VFD	VARIABLE FREQUENCY DRIVE FURNISHED AND INSTALL BY DIV. 23, WIRING CONNECTIONS BY ELECTRICAL CONTRACTOR.
FSD	COMBINATION FIRE AND SMOKE DAMPER. FURNISH AND INSTALL DUCT SMOKE DETECTOR / AREA SMOKE DETECTOR AND CONNECT PER MANUFACTURER'S REQUIREMENTS. PROVIDE AND INSTALL A 20A MOTOR RATED TOGGLE SWITCH AS A DISCONNECT MEANS FOR CONNECTION TO DETECTOR AND OPERATOR. PROVIDE VISUAL "CLOSED" INDICATOR LIGHT IN CEILING ADJACENT TO DAMPER.
R	FIRE ALARM RELAY FOR FDSD CONTROL (PROVIDED BY FIRE ALARM CONTRACTOR).
100AF / 70AT 3P	MOLDED CASE CIRCUIT BREAKER. "AF" INDICATES AMPERE FRAME, "AT" INDICATES AMPERE TRIP RATING AND NUMBER OF POLES AS INDICATED. SUBSCRIPT INDICATES TYPE.

NO SUBSCRIPT	THERMAL MAGNETIC
NA	NON–AUTOMATIC
MO	MAGNETIC ONLY
CL	CURRENT LIMITING
SS	SOLID STATE

Symbol	Description
	DRAW–OUT TYPE CIRCUIT BREAKER
100AS / 90AFU 3P	FUSED SWITCH. "AS" INDICATED AMPERE SWITCH RATING, "AFU" INDICATES AMPERE FUSE RATING, NUMBER OF POLES AS INDICATED.
XXX	ELECTRICAL FEEDER IDENTIFICATION SYMBOL
T	DRY TYPE TRANSFORMER, COPPER WOUND FLOOR MOUNTED UNLESS NOTED OTHERWISE.
M	UTILITY METER SOCKET, WITH C.T.s, CLIPS, ETC., PER SERVING UTILITY COMPANY.
	GROUND, "GND".
GFP	GROUND FAULT PROTECTION DEVICE, INCLUDING RELAYS, AND CURRENT TRANSFORMER.
	DUPLEX GROUNDING TYPE RECEPTACLE, 20 AMP, 125 VOLT, 2 POLE, 3 WIRE. MOUNT AT +18" TO CENTER U.N.O.
	DUPLEX GROUNDING TYPE RECEPTACLE, 20 AMP, 125 VOLT, 2 POLE, 3 WIRE RED COLOR, CONNECTED TO EMERGENCY CIRCUIT@ +18" AFF U.N.O.
	DUPLEX GROUND FAULT INTERRUPTING TYPE RECEPTACLE, 20 AMP, 125 VOLT, 2 POLE, 3 WIRE. MOUNT AT +18" TO CENTER UNLESS NOTED OTHERWISE.
	TWO DUPLEX GROUNDING TYPE RECEPTACLES IN 4S BOX, 20 AMP, 125 VOLT, 2 POLE, 3 WIRE. MOUNT AT +18" TO CENTER UNLESS NOTED OTHERWISE.
	FLUSH FLOOR MOUNTED DUPLEX GROUNDING TYPE RECEPTACLE, 20 AMP, 125 VOLT, 2 POLE, 3 WIRE.
A	SPECIAL PURPOSE OUTLET MOUNTED IN FLUSH WALL BOX. LETTER INDICATES TYPE.

- A – NEMA TYPE 14–20R (208 VOLT, 3 PHASE, 20 AMP)
- B – NEMA TYPE 6–20R (208 VOLT, 1 PHASE, 20 AMP)
- C – NEMA TYPE 6–30R (208 VOLT, 1 PHASE, 30 AMP)
- D – NEMA TYPE 14–50R (208 VOLT, 3 PHASE, 50 AMP)
- E – NEMA TYPE 5–30R (120 VOLT, 1 PHASE, 30 AMP)
- F – NEMA TYPE 15–30R (208 VOLT, 3 PHASE, 30 AMP)
- G – NEMA TYPE 15–60R (208 VOLT, 1 PHASE, 60 AMP)
- H – NEMA TYPE L6–30R (208 VOLT, 1 PHASE, 30 AMP) – TWIST LOCK
- K – NEMA TYPE L5–30R (120 VOLT, 1 PHASE, 30 AMP) – TWIST LOCK

Symbol	Description
1a	FLUORESCENT LIGHT FIXTURE OUTLET. LOWER CASE LETTER INDICATES CONTROLLING SWITCH, NUMERAL INDICATES CIRCUIT.
1a	FLUORESCENT STRIP FIXTURE. LOWER CASE LETTER INDICATES CONTROLLING SWITCH. NUMERAL INDICATES CIRCUIT.
1a	BRACKET OR WALL MOUNTED LIGHT FIXTURE AND OUTLET, HID, FLUORESCENT OR INCANDESCENT. LOWER CASE LETTER INDICATES CONTROLLING SWITCH, NUMERAL INDICATES CIRCUIT.
LL	ILLUMINATED EXIT LIGHT FIXTURE. SIDE, BACK, CEILING, OR PENDANT MOUNTED, SINGLE OR DOUBLE FACED AS NOTED BY SHADED ARC, WITH OR WITHOUT DIRECTIONAL ARROW AS NOTED ON THE DRAWINGS. NOT TO BE USED AS JUNCTION BOX OR "THROUGH–WIRE" DEVICE. "LL" INDICATES LOW–LEVEL MOUNTING.
Q 106 21 +9'–0"	UTILITY/"BACK OF–HOUSE" LIGHTING FIXTURE IDENTIFICATION SYMBOL. LETTER INDICATES FIXTURE TYPE. NUMERALS IN LOWER HALF OF HEXAGON INDICATE FIXTURE WATTAGE (INCLUDING BALLAST WHERE APPLICABLE). NUMERAL OUTSIDE TOP OF HEXAGON INDICATES NUMBER OF FIXTURES REQUIRED. NUMERAL OUTSIDE BOTTOM OF HEXAGON INDICATES MOUNTING HEIGHT FROM FLOOR TO BOTTOM OF FIXTURE. OMISSION OF MOUNTING HEIGHT INDICATES CEILING MOUNTING.
3K Sa	SWITCH. LOWER CASE LETTER AT BOTTOM INDICATES OUTLETS CONTROLLED. CAPITAL SUPERSCRIPT INDICATES SWITCH TYPE.

NO SUPERSCRIPT	–	SINGLE POLE SWITCH
2	–	DOUBLE POLE
3	–	THREE WAY
4	–	FOUR WAY
K	–	KEYED SWITCH
D	–	DIGITAL LIGHTING CONTROL SYSTEM SWITCH
M	–	MANUAL MOTOR STARTER WITH THERMAL

Symbol	Description
S	WALL MOUNTED DUAL TECHNOLOGY OCCUPANCY SENSOR
OP	PHOTOCELL
TC	TIMER CONTROL
	COMBINATION DATA/TELEPHONE OUTLET @ 18"A.F.F. (U.N.O.)
	SINGLE DATA OUTLET (CAT 5e) PER SPECIFICATION, WALL MOUNTED AT +15" A.F.F. (U.O.N.)
Z1	PASSIVE INFRARED MOTION DETECTOR ("Z1" INDICATES ZONE #1)
FACP	MAIN FIRE ALARM CONTROL PANEL
F	ADDRESSABLE MANUAL PULL STATION
L	STROBE LIGHT
H	COMBINATION HORN & STROBE LIGHT
NO / SHEET	REFERRING DETAIL: NO DETAIL NUMBER; SHEET REFERRING SHEET

DEMOLITION SYMBOL LIST

Symbol	Description
E	EXISTING EQUIPMENT WITH "E" ADJACENT IS TO REMAIN.
R	EXISTING EQUIPMENT WITH "R" ADJACENT IS TO BE COMPLETELY DISCONNECTED AND REMOVED.
RR	EXISTING EQUIPMENT WITH "RR" ADJACENT IS TO BE DISCONNECTED, REMOVED AND RELOCATED TO NEW LOCATION AND RECONNECTED AS REQUIRED.
ER	RELOCATED EQUIPMENT SHOWN IN NEW LOCATION.
—E—	EXISTING CONDUIT RUN TO REMAIN. EXISTING CONDUCTORS TO REMAIN UNLESS NOTED OTHERWISE ON DRAWINGS.
—EA—	EXISTING CONDUIT RUN TO BE ABANDONED. REMOVE CONDUCTORS AND CAP ENDS OF CONDUIT.
—EX—	EXISTING CONDUIT RUN TO BE REWIRED. REFER TO PLANS FOR WIRING REQUIREMENTS.
—R—	EXISTING CONDUIT AND WIRE RUN TO BE COMPLETELY DISCONNECTED AND REMOVED BACK TO LAST REMAINING OUTLET OR DEVICE. "P" ADJACENT TO "R" INDICATES POWER SYSTEM CONDUIT, "T" ADJACENT TO "R" INDICATEDS SIGNAL SYSTEM CONDUIT.
—R—X—E—	"X" INDICATES APPROXIMATE POINT OF INTERCEPTION OF EXISTING CONDUIT RUN. CONDUIT TO BE REMOVED AT "R" SIDE OF "X". REMOVE ALL CONDUCTORS PRIOR TO CUTTING CONDUIT. EXACT LOCATION OF ALL CONDUITS SHALL BE FIELD VERIFIED.

SHEET INDEX

SHEETS	DESCRIPTION
E001	ELECTRICAL SYMBOLS AND ABBREVIATIONS
E002	GENERAL, PV AND DEMOLITION NOTES
E003	ELECTRICAL SINGLE LINE DIAGRAM
E004	PV SYSTEM BLOCK DIAGRAM
E101	ELECTRICAL OVERALL FLOOR PLAN
E202	PARTIAL POWER AND COMMUNICATION DEMOLITION AND PROPOSED PLAN
E203	PARTIAL LIGHTING AND ROOF PLAN
E301	ELECTRICAL DETAILS

ABBREVIATIONS

ACAM	ACCESS CONTROL AND MONITORING
AF	AMPERE FRAME RATING OF CIRCUIT BREAKERS
AFF	ABOVE FINISHED FLOOR
AFU	AMPERE FUSE RATING
AIC	AMPS INTERUPTING CAPACITY RATING (RMS SYMMETRICAL)
AMP, A	AMPERES
AS	AMPERE SWITCH RATING
AT	AMPERE TRIP RATING OF BREAKER
AWG	AMERICAN WIRE GAUGE
BKR	BREAKER
C.	CONDUIT
CAB	CABINET
CAT.	CATEGORY
CCTV	CLOSED CIRCUIT TELEVISION
C.O.	CONDUIT ONLY
DWG	DRAWING
(E)	EXISTING
EMERG, EM	EMERGENCY
EQPT,EQ.	EQUIPMENT
FIDS	FLIGHT INFORMATION DISPLAY SYSTEM
FIS	FEDERAL INSPECTION SERVICES
FLUOR	FLUORESCENT
F.O.	FIBER OPTIC
FUT	FUTURE
GFI	GROUND FAULT INTERRUPTING
GND	GROUND
HZ	HERTZ
IDF	INTERMEDIATE DISTRIBUTION FRAME
INS	IMMIGRATION & NEUTRALIZATION SERVICES
J.B.	JUNCTION BOX
K	THOUSAND (KILO)
KV	KILOVOLTS
KW	KILOWATTS
KVA	KILOVOLT AMPERES
LS	LIMIT SWITCH
LT, LTS	LIGHT, LIGHTS
LTG	LIGHTING
LCP	LIGHTING CONTROL PANEL
MDF	MAIN DISTRIBUTION FRAME
MAX	MAXIMUM
MM	MULTIMODE
MT, MTD, MTG	MOUNT, MOUNTED, MOUNTING
(N)	NEW
NEC	NATIONAL ELECTRICAL CODE
NO, NOS	NUMBER, NUMBERS
NTS	NOT TO SCALE
OC	ON CENTER
PNL	PANEL
PWR	POWER
REQD	REQUIRED
SHT	SHEET
TBD	TO BE DETERMINED
TTB	TELEPHONE TERMINAL BACKBOARD
TYP	TYPICAL
U.N.O.	UNLESS NOTED OTHERWISE
U.G.	UNDER GROUND
V	VOLT
VFD	VARIABLE FREQUENCY DRIVE
W	WATTS
WP	WEATHERPROOF
XFMR	TRANSFORMER

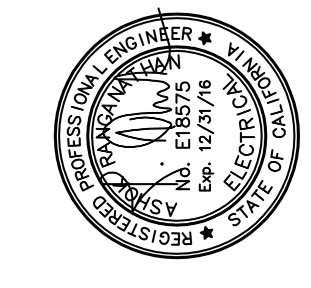

NO.	REVISIONS	DATE
1	DESIGN DEVELOPMENT PACKAGE	2/17/16
2	CONSTRUCTION DOCUMENT PACKAGE	3/18/16
3	PLAN CHECK SUBMITTAL	3/18/16

TTG : STRUCTURAL : MECHANICAL : ELECTRICAL : CIVIL
TMAD TAYLOR & GAINES
300 North Lake Avenue, 14th Floor
Pasadena, California 91101
Phone: 626.463.2800 Fax: 626.463.2801
www.ttgcorp.com
Project No. 0216.119.00

SAA ASSOCIATES
P.O. BOX 93786,
PASADENA, CA 91109
T: 818-437-8452

PROJECT: MADRONA MARSH NATURE CENTER IMPROVEMENTS

ADDRESS: 3201 PLAZA DEL AMO BOULEVARD TORRANCE, CA 90503

DRAWING TITLE: ELECTRICAL SYMBOLS AND ABBREVIATIONS

PRINT DATE: 03/17/2016
PROJECT NUMBER: XXXX
APPLICATION NUMBER:
SHEET NUMBER: E001

R:\22CAD\Tmad Projects\2016\0216119.00\MPE\E001.dwg 03/17/2016 16:25

GENERAL NOTES

1. THE SEISMIC BRACING AND ANCHORAGE OF ELECTRICAL CONDUITS, BUS DUCT, WIREWAY, AND CABLE TRAY SHALL BE IN ACCORDANCE WITH CBC 2013, IBC 2012. FOR 1.0 IMPORTANCE FACTOR. RESTRAINT SYSTEM SHALL BE DESIGN AND BUILD BY THE CONTRACTOR.

2. ALL ELECTRICAL MATERIALS AND EQUIPMENT SHALL BE NEW AND SHALL BE LISTED BY UNDERWRITER'S LABORATORIES (UL) AND BEAR THEIR LABEL, OR LISTED AND CERTIFIED BY A NATIONALLY RECOGNIZED TESTING AUTHORITY WHERE UL DOES NOT HAVE A LISTING. CUSTOM MADE EQUIPMENT SHALL HAVE COMPLETE TEST DATA SUBMITTED BY THE MANUFACTURER ATTESTING TO ITS SAFETY. IN ADDITION, THE MATERIALS, EQUIPMENT, AND INSTALLATION SHALL COMPLY WITH THE REQUIREMENTS OF THE FOLLOWING:

   -AMERICAN SOCIETY OF TESTING MATERIALS (ASTM)
   -INSULATED POWER CABLE ENGINEERS ASSOCIATION (IPCEA)
   -NATIONAL ELECTRICAL MANUFACTURERS ASSOCIATION (NEMA)
   -AMERICAN STANDARD ASSOCIATION (ASA)
   -NATIONAL FIRE PROTECTION AGENCY (NFPA)
   -AMERICAN NATIONAL STANDARD INSTITUTE (ANSI)
   -CALIFORNIA ELECTRICAL CODE (CEC) - LATEST EDITION
   -CALIFORNIA CODE OF REGULATIONS TITLE 24 (CCR)
   -INSTITUTE OF ELECTRICAL AND ELECTRONIC ENGINEERS (IEEE)
   -ALL LOCAL CODES HAVING JURISDICTION.

   WHERE THE CODES HAVE DIFFERENT LEVELS OF REQUIREMENTS, THE MOST STRINGENT RULE SHALL APPLY.

3. THE CONTRACTOR SHALL VISIT THE SITE INCLUDING ALL AREAS INDICATED ON THE DRAWINGS, WITH A FULL KNOWLEDGE THAT SOME OF THE AREAS REQUIRE SPECIAL SECURITY ARRANGEMENT TO GAIN ACCESS. IN SUCH CASE, IT SHALL BE THE CONTRACTOR'S SOLE RESPONSIBILITY TO MAKE ALL ARRANGEMENT TO VISIT THESE AREAS. HE SHALL THOROUGHLY FAMILIARIZE HIMSELF WITH THE THE EXISTING CONDITIONS AND ACCEPT SUCH CONDITIONS UNDER WHICH HE SHALL BE REQUIRED TO PERFORM HIS WORK.

4. IT SHALL BE THE CONTRACTOR'S RESPONSIBILITY TO OBTAIN A COMPLETE SET OF CONTRACT DOCUMENTS, ADDENDA, DRAWINGS AND SPECIFICATIONS. HE SHALL CHECK THE DRAWINGS OF THE OTHER TRADES AND SHALL CAREFULLY READ THE ENTIRE SPECIFICATIONS AND DETERMINE HIS RESPONSIBILITIES. FAILURE TO DO SO SHALL NOT RELEASE THE CONTRACTOR FROM DOING THE WORK IN COMPLETE ACCORDANCE WITH THE DRAWINGS AND SPECIFICATIONS.

5. THE CONTRACTOR SHALL SECURE AND PAY FOR ALL PERMITS, FEES, CHARGES, AND INCIDENTAL COSTS NECESSARY FOR EXECUTION AND COMPLETION OF ELECTRICAL WORK, INCLUDING ALL CHARGES BY STATE, COUNTY AND LOCAL GOVERNMENTAL AGENCIES.

6. THE CONTRACTOR SHALL COORDINATE HIS WORK WITH OTHER TRADES AT THE SITE. ANY DISCREPANCIES, AMBIGUITIES OR CONFLICTS SHALL BE BROUGHT TO THE ATTENTION OF THE ENGINEERING DURING BID TIME FOR CLARIFICATION. ANY SUCH CONFLICTS NOT CLARIFIED PRIOR TO BID SHALL BE SUBJECT TO THE INTERPRETATION OF THE ENGINEER.

7. THE CONTRACTOR SHALL PROVIDE AND KEEP UP-TO-DATE A COMPLETE RECORD SET OF DRAWINGS. THESE PRINTS SHALL BE CORRECTED DAILY AND SHOW EVERY CHANGE FROM THE ORIGINAL DRAWINGS. THIS SET OF DRAWINGS SHALL BE KEPT ON THE JOB SITE AND SHALL BE USED ONLY AS A RECORD SET. THIS SHALL NOT BE CONSTRUED AS AUTHORIZATION FOR THE CONTRACTOR TO MAKE CHANGES IN THE LAYOUT WITHOUT DEFINITE INSTRUCTION IN EACH CASE. UPON COMPLETION OF THE WORK, A SET OF REPRODUCIBLE CONTRACT DRAWINGS SHALL BE OBTAINED FROM THE ENGINEERING, AND ALL CHANGES AS NOTED ON THE RECORD SET OF DRAWINGS SHALL BE INCORPORATED THEREON WITH BLACK INK IN A NEAT, LEGIBLE, UNDERSTANDABLE AND PROFESSIONAL MANNER.

8. IN SOME INSTANCES, IT MAY BE NECESSARY TO DEFER WORK IN CERTAIN AREAS AND LOCATIONS UNTIL SUCH TIME AS EXISTING FACILITIES CAN BE TEMPORARILY OR PERMANENTLY REARRANGED THE CONTRACTOR SHALL HAVE THOROUGH UNDERSTANDING OF ALL THE PROJECT RESTRAINTS AND PHASING REQUIREMENTS AS DESCRIBED IN THE PROJECT DOCUMENTS, AND ACCEPT THE CONDITIONS UNDER WHICH HE SHALL BE REQUIRED TO PERFORM HIS WORK.

9. ALL INTERRUPTION OF ELECTRICAL POWER SHALL BE KEPT TO A MINIMUM. HOWEVER, WHEN AN INTERRUPTION IS NECESSARY, THE SHUTDOWN MUST BE COORDINATED WITH THE OWNER 28 DAYS PRIOR TO THE OUTAGE. WORK IN ANY EXISTING SWITCH-BOARDS OR PANELBOARDS SHALL BE COORDINATED WITH THE OWNER PRIOR TO REMOVING ACCESS PANELS OR DOORS.

10. IT SHALL BE THE CONTRACTOR'S RESPONSIBILITY TO PROVIDE TEMPORARY POWER FACILITIES AND CONNECTIONS FOR ALL FEEDERS OR SYSTEMS BEING DISCONNECTED IN ORDER TO MAINTAIN SYSTEMS IN OPERATION OR WHERE SAID FEEDERS OR SYSTEMS REQUIRE EMERGENCY STANDBY POWER.

11. AFTER ALL REQUIREMENTS OF THE SPECIFICATIONS AND/OR THE DRAWINGS HAVE BEEN FULLY COMPLETED, REPRESENTATIVES OF THE OWNER WILL INSPECT THE WORK. THE CONTRACTOR SHALL PROVIDE COMPETENT PERSONNEL TO DEMONSTRATE THE OPERATION OF ANY ITEM OR SYSTEM TO THE FULL SATISFACTION OF EACH REPRESENTATIVE. FINAL ACCEPTANCE OF THE WORK WILL BE MADE BY THE OWNER AFTER RECEIPT OF APPROVAL AND RECOMMENDATION OF ACCEPTANCE FROM EACH REPRESENTATIVE.

12. THE CONTRACTOR SHALL FURNISH A MINIMUM OF ONE YEAR WRITTEN GUARANTEE OF MATERIALS AND WORKMANSHIP FROM THE DATE OF SUBSTANTIAL COMPLETION.

13. ALL FINAL CONNECTIONS TO, AND INSTALLATION OF OWNER FURNISHED EQUIPMENT SHALL BE MADE BY THE CONTRACTOR.

14. DURING SITE VISIT, DETERMINE THE EXACT LOCATION OF RESPECTIVE EQUIPMENT. SUPPLY POWER AND MAKE CONNECTION TO EQUIPMENT REQUIRING ELECTRICAL CONNECTIONS AS INDICATED ON THE SINGLE LINE DIAGRAM, ELECTRICAL DRAWINGS. REVIEW THE EXISTING DRAWINGS, SIZE AND LOCATION OF EQUIPMENT. DISCONNECT SWITCHES, WIRING, CONTROLS AND CONDUIT PROVIDING. THE CONTRACTOR SHALL BE RESPONSIBLE FOR OBTAINING ALL MANUFACTURER'S SHOP DRAWINGS PRIOR TO ROUGHING IN ALL CONDUIT TO EQUIPMENT.

15. CONDUIT PENETRATION AND OPENINGS IN CONCRETE WALLS OR FLOORS OR STRUCTURAL IS STEEL MEMBERS IS LIMITED TO MAXIMUM 2-1/2"C. PERFORM CORING, SAW CUTTING, PATCHING, AND REFINISHING OF EXISTING WALLS AND SURFACES WHEREVER IT IS NECESSARY TO PENETRATE. OPENINGS SHALL BE SEALED IN AN APPROVED METHOD TO MEET THE FIRE RATING OF THE PARTICULAR WALL, FLOOR OR CEILING. EXACT METHOD AND LOCATIONS OF CONDUIT PENETRATIONS AND OPENINGS IN CONCRETE WALLS OR FLOORS SHALL BE UL APPROVED.

16. CONNECTIONS TO VIBRATING EQUIPMENT AND SEISMIC SEPARATIONS SHALL BE MADE WITH:
    LIQUID-TIGHT FLEXIBLE STEEL CONDUIT. PROVIDE A SEPARATE INSULATED EQUIPMENT GROUNDING CONDUCTOR IN FLEXIBLE CONDUIT RUNS. MAXIMUM LENGTH SHALL BE SIX FEET UNLESS OTHERWISE NOTED.

17. ROUTE EXPOSED CONDUIT AND CONDUIT ABOVE ACCESSIBLE CEILING SPACES PARALLEL AND PERPENDICULAR TO WALLS AND ADJACENT PIPING. ARRANGE CONDUIT TO MAINTAIN HEADROOM AND TO PRESENT A NEAT APPEARANCE.

18. CONDUIT SHALL NOT BE INSTALLED IN ANY FLOOR SLAB. CONDUIT SHALL BE INSTALLED CONCEALED IN THE CEILING SPACE, CONCEALED IN WALLS, OR BELOW FLOOR SLAB UNLESS NOTED OTHERWISE.

19. ATTENTION IS CALLED TO THE FACT THAT THE CEILING SYSTEMS FOR THE MOST PART ARE CONSIDERED TO BE INACCESSIBLE. THE CONTRACTOR SHALL STRATEGICALLY LOCATE BOXES, ETC., IN AN ACCESSIBLE CEILING SPACE. IT IS STRONGLY RECOMMEND THAT THE CONTRACTOR SHALL CONDUCT A SURVEY OF THE CEILING TYPE IN ALL WORK AREAS TO QUANTIFY ACCESSIBLE LOCATIONS FOR PULLBOXES AND JUNCTION BOXES REQUIRED ABOVE EXISTING CEILING.

20. COORDINATE REQUIRED ACCESS DOORS IN NON-ACCESSIBLE CEILINGS TO SUIT FIELD CONDITIONS. THE EXACT SIZES AND PHYSICAL LOCATIONS SHALL SUIT ACCESSIBILITY AND CONSTRUCTION CONDITIONS. ACCESS DOORS SHALL BE PROVIDED IN OTHER SECTIONS OF THE SPECIFICATIONS. ACCESS DOORS SHALL HAVE A FIRE RATING EQUAL TO THE CEILING ASSEMBLY IN WHICH THEY ARE INSTALLED.

21. WHENEVER A DISCREPANCY IN QUANTITY OR SIZE OF CONDUIT, WIRE, EQUIPMENT DEVICES, CIRCUIT BREAKERS, ETC. (ALL MATERIALS), ARISES ON THE DRAWINGS OR SPECIFICATIONS, THE CONTRACTOR SHALL BE RESPONSIBLE FOR PROVIDING AND INSTALLING ALL MATERIAL AND SERVICES REQUIRED BY THE STRICTEST CONDITIONS NOTED ON THE DRAWINGS OR IN THE SPECIFICATIONS TO ENSURE COMPLETE AND OPERABLE SYSTEMS AS REQUIRED BY THE OWNER AND ENGINEERING/ENGINEER.

22. UTILITY PENETRATIONS OF ANY KIND IN FIRE AND SMOKE PARTITIONS AND CEILING ASSEMBLIES, SHALL BE FIRESTOPPED AND SEALED WITH AN APPROVED MATERIAL SECURELY INSTALLED.

    STEEL ELECTRICAL OUTLET BOXES WHICH DO NOT EXCEED 16 SQUARE INCHES IN AREA, NEED NOT BE PROTECTED IN ONE HOUR OR TWO HOUR FIRE RATED WALLS, PARTITIONS, CEILINGS, AREA SEPARATION.

23. UTILITY AND ELECTRICAL OUTLETS OR BOXES SHALL BE SECURELY FASTENED TO THE STUD OF FRAMING OF THE WALL, PARTITION OR CEILING ASSEMBLY. THE OPENING IN THE GYPSUM BOARD FACING SHALL BE CUT SO THAT THE CLEARANCE BETWEEN THE BOX AND THE GYPSUM BOARD DOES NOT EXCEED 1/8 INCH. IN SMOKE WALLS OR PARTITIONS, THE 1/8 INCH CLEARANCE SHALL BE FILLED WITH AN APPROVED FIRE-RATED SEALANT.

24. EXISTING CEILING FIXTURES REMOVED TO ACCOMPLISH THE WORK SHALL BE REINSTALLED AS FOR NEW WORK.

25. REFER TO SINGLE LINE DIAGRAM AND FEEDER SCHEDULES FOR CONDUIT AND CONDUCTOR SIZE TO PANELS, TRANSFORMERS.

26. STRAIGHT FEEDER, AND CONDUIT RUNS SHALL BE PROVIDED WITH SUFFICIENT PULL BOXES OR JUNCTION BOXES TO LIMIT THE MAXIMUM LENGTH OF ANY SINGLE CABLE PULL TO 100 FEET. PULL BOXES SHALL BE SIZED PER CODE OR AS INDICATED ON DRAWINGS. LOCATIONS SHALL BE DETERMINED IN THE FIELD OR AS INDICATED ON THE DRAWINGS.

27. IDENTIFICATION NAMEPLATES SHALL BE MICARTA 1/8 INCH THICK AND OF APPROVED SIZE WITH BEVELED EDGES AND ENGRAVED WHITE LETTERS A MINIMUM OF 1/4 INCH HIGH ON BLACK BACKGROUND. NAMEPLATES SHALL BE PROVIDED FOR NEW CIRCUITS IN POWER DISTRIBUTION SWITCHBOARDS OR PANEL BOARDS, MOTOR CONTROL CENTERS, LIGHTING DISTRIBUTION PANEL BOARDS, SEPARATELY MOUNTED STARTING SWITCHES, DISCONNECTING SWITCHES, SELECTOR SWITCHES, TRANSFORMERS, ETC. ALL NAMEPLATES SHALL BE ATTACHED WITH SCREWS. PULL BOXES, JUNCTION BOXES, AND DEVICE BOXES SHALL BE MARKED WITH A PERMANENT MARKER.

28. THE EXACT LOCATION OF ALL ELECTRICAL DEVICES AND EQUIPMENT SHALL BE COORDINATED AT FIELD AND COMPLY WITH CODE CLEARANCE.

29. DRAWINGS ARE DIAGRAMMATIC ONLY. ROUTING OF RACEWAYS SHALL BE AT THE OPTION OF THE CONTRACTOR UNLESS OTHERWISE NOTED AND SHALL BE COORDINATED WITH OTHER SECTIONS. DO NOT SCALE THE ELECTRICAL DRAWINGS FOR LOCATIONS OF ANY ELECTRICAL, ENGINEERINGURAL, STRUCTURAL, FEATURES.

30. THE ALTERATION OF THE EXISTING BUILDING IS WORK OF A COMPLEX NATURE WHICH WILL REQUIRE PLANNING, CAREFUL PREPARATION EXECUTION, ATTENTION TO DETAIL AND CLOSE SUPERVISION BY THE THE CONTRACTOR. CONTRACTOR WILL BE REQUIRED TO DO THIS WORK IN FULL COOPERATION WITH THE OTHER CONSTRUCTION TRADES AND, SUBJECT TO SCHEDULING, ARRANGE TO MINIMIZE DISRUPTION OF THE NORMAL ACTIVITIES OF THE FACILITY. ELECTRICAL CONTRACTOR TO COORDINATE ALL ACTIVITIES WITH THE POLB ENGINEER.

31. IN AREAS WHERE THERE ARE NO ALTERATIONS INDICATED, THE EXISTING FACILITIES SHALL REMAIN IN SERVICE. THAT ALL THE EXISTING ELECTRICAL SYSTEMS INCLUDING ELECTRICAL DEVICES, WALL RECEPTACLES, LIGHTING, SIGNALING DEVICES. ARE TO REMAIN IN OPERATION THROUGH- OUT THE CONSTRUCTION PERIOD.

32. INSTALLATION OF ALL ELECTRICAL EQUIPMENT SHALL BE CAREFULLY COORDINATED WITH EXISTING CONDITIONS TO AVOID POSSIBLE INTERFERENCE PROBLEMS. THE CONTRACTOR SHALL PLAN HIS WORK WITH FULL KNOWLEDGE AND UNDER- STANDING OF THE EXISTING CONDITIONS WITHIN THE AREA BEFORE PROCEEDIG WITH THE INSTALLATION.

33. FOR ALL SCHEDULED OUTAGES OR DISRUPTION OF SERVICE (POWER OR SIGNAL SYSTEMS). CONTRACTOR TO FURNISH A WRITTEN PLAN WHICH WOULD INCLUDE DESCRIPTION OF OUTAGE AND RECOMMENDATION OF ALTERNATE SERVICE FOR ANY EXTENDED PERIOD OF TIME. CONTRACTOR SHALL PROVIDE PLAN TO AND SECURE APPROVAL FROM THE POLB ENGINEER. A MINIMUM OF 30 DAYS IN ADVANCE OF INTENDED DISRUPTION OF SERVICE AND OBTAIN WRITTEN AUTHORIZATION FROM OWNER TO PROCEED.

34. ELECTRICAL EQUIPMENT SHALL BE UL LISTED OR LISTED BY A CITY OF LOS ANGELES RECOGNIZED ELECTRICAL TESTING LABORATORY OR APPROVED BY THE CITY PLAN CHECK DEPARTMENT.

35. ALL EXISTING PANELBOARD/SWITCHBOARD SCHEDULES ARE BASED ON POLB AS-BUILT DRAWINGS AND SITE SURVEY OBSERVED DIRECTORY CARDS.

36. ALL ABANDONED AND NEW PENETRATIONS IN WALLS, FLOORS OR CEILINGS SHALL BE SUITABLY CLOSED UP AND SEALED WITH HILTI CAULK.

37. CONTRACTOR SHALL PROVIDE AND INSTALL NECESSARY GROUND BONDING JUMPERS FOR ALL SEISMIC JOINTS SIZE PER NEC ARTICLE 250.

38. WHEN INSTALLING DRILLED-IN ANCHORS IN EXISTING NON-PRESTRESSED/ PRESTRESSED REINFORCED CONCRETE, USE CARE AND CAUTION TO AVOID CUTTING OR DAMAGING THE EXISTING REINFORCING BARS. CONTRACTOR TO LOCATE EXISTING SLAB REBAR VIA PACHOMETER/FERROSCAN AT EQUIPMENT ANCHORS.

39. A FINAL REPORT FOR THE TESTING AND ADJUSTING OF ALL NEW SYSTEM SHALL BE COMPLETED AND PROVIDED TO THE FIELD INSPECTOR PRIOR TO FINAL APPROVAL. THIS REPORT SHALL BE SIGNED BY THE INDIVIDUAL RESPONSIBLE FOR PERFORMING THESE SERVICES.

40. AN OPERATION & SYSTEMS MANUAL, SHALL BE PROVIDED TO THE FIELD INSPECTOR AT THE TIME OF FINAL INSPECTION.

41. GENERAL CONTRACTOR TO PROVIDED NECESSARY COLUMN WRAP FINISHES IN EXISTING COLUMNS BEING USED FOR NEW CONDUIT ROUTING.

PV GENERAL NOTES

1. THE PHOTOVOLTAIC SYSTEM DESCRIBED HEREIN SHALL BE BUILT BY A LICENSED (C-46) SOLAR CONTRACTOR OR A LICENSED (C-10) ELECTRICAL CONTRACTOR OR A LICENSED GENERAL CONTRACTOR WITH EITHER A C-10 OR A C-46 WORKING AS A SUB-CONTRACTOR TO THE GENERAL CONTRACTOR.

2. PV SYSTEM SHALL BE GUARANTEED FOR A PERIOD OF TEN YEARS FROM THE DATE OF ACCEPTANCE BY THE OWNER.

3. ALL EQUIPMENT SHALL BE LISTED AND LABELED PER RECOGNIZED ELECTRICAL TESTING LABORATORY AND INSTALLED PER THE LISTING REQUIREMENTS AND THE MANUFACTURER'S INSTRUCTIONS.

4. ALL INVERTERS SHALL BE IEEE 929 COMPLIANT AND SHALL BE INSPECTED BEFORE COMMISSIONING, TESTING, AND OPERATION OF THE SYSTEM

5. ALL OUTDOOR EQUIPMENT SHALL BE NEMA 3R, INCLUDING ROOF MOUNTED TRANSITION BOXES AND SWITCHES.

6. ALL EQUIPMENT SHALL BE PROPERLY GROUNDED PER THE REQUIREMENTS OF NEC ART. 250.

7. NEC ART. 690.9 (A). ALL CIRCUITS CONNECTED TO MORE THAN ONE SOURCE SHALL HAVE OVERCURRENT DEVICES LOCATED SO AS TO PROVIDE OVERCURRENT PROTECTION FROM ALL SOURCES.

8. NEC ART. 690.18. DUE TO THE FACT THAT PV MODULES ARE ENERGIZED WHENEVER THEY ARE EXPOSED TO LIGHT, PV CONTRACTOR SHALL DISABLE THE ARRAY DURING INSTALLATION AND SERVICE BY SHORT CIRCUITING, OPEN CIRCUITING, OR COVERING THE ARRAY WITH AN OPAQUE COVERING.

9. ANY SUBSTITUTED MATERIAL, SUBSTITUTED EQUIPMENT, OR INSTALLATION CHANGES MUST BE SUBMITTED TO THE ENGINEER AND OWNER FOR EVALUATION AND APPROVAL PRIOR TO INSTALLATION OR IMPLEMENTATION ON THE JOB.

10. ANY SUBSTITUTED EQUIPMENT INSTALLED WITHOUT THE APPROVAL OF THE ENGINEER AND OWNER SHALL BE REMOVED AND REPLACED WITH ACCEPTABLE MATERIAL WITHOUT COST TO THE OWNER. CONTRACTOR IS RESPONSIBLE FOR PROVIDING ANY ADDITIONAL WORK OR ADJUSTMENTS CAUSED BY SUBSTITUTED EQUIPMENT NEEDED FOR COMPLIANCE OR PROPER OPERATION AT NO COST TO THE OWNER. APPROVAL OF SUBMITTALS DOES NOT RELIEVE THE CONTRACTOR OF THIS RESPONSIBILITY.

11. THE PV SYSTEM CONTRACTOR SHALL COORDINATE WITH THE GENERAL CONTRACTOR AND THE ELECTRICAL CONTRACTOR TO INSURE THAT THE COMPLETE PV SYSTEM IS INSTALLED AS DESCRIBED IN THESE DRAWINGS.

12. FALL ARREST PROTECTION PER OSHA REQUIREMENTS SHALL BE PROVIDED FOR ALL ROOF WORK

13. ALL CONDUCTORS AND TERMINATIONS SHALL BE RATED FOR 75°C MINIMUM.

14. PER LOCAL FIRE DISTRICT REGULATIONS, ALL PV SYSTEM CONDUITS SHALL BE PERMANENTLY LABELED WITH FADE RESISTANT MATERIAL AS FOLLOWS: "CAUTION: SOLAR PV WIRING MAY REMAIN ENERGIZED AFTER DISCONNECTION DURING DAYLIGHT HOURS". INSTALL LABELS EVERY 20' AND ONE AT EYE LEVEL FOR VERTICAL CONDUIT.

15. NEC ART. 690.56 (B). A PLACARD SHALL BE PROVIDED ON THE EXTERIOR AND INTERIOR OF THE MAIN SERVICE DISCONNECT LOCATION WITH THE FOLLOWING TEXT: "CAUTION. SOLAR PHOTOVOLTAIC (PV) SYSTEM INSTALLED. WHEN POWER DISCONNECTED, SOLAR PV MODULES AND WIRING IN CONDUIT TO INVERTER MAY REMAIN ENERGIZED DURING DAYLIGHT HOURS. PHOTOVOLTAIC SYSTEM DISCONNECTS ARE LOCATED IN THE STORAGE ROOM 112."

16. NEC ART. 690.14. EACH DC DISCONNECT SHALL BE LABELED WITH: "SOLAR PHOTOVOLTAIC POWER SYSTEM EMERGENCY DC DISCONNECT". LABEL SHALL BE 1" X 4" MINIMUM WITH UV RESISTANT BLACK LETTERS ON YELLOW BACKGROUND.

17. NEC ART. 690.53. A PLACARD, MINIMUM 3" X 3", UV RESISTANT, AND INCLUDING BLACK LETTERS AND YELLOW BACKGROUND, SHALL BE PROVIDED BESIDE THE DC DISCONNECT LOCATION WITH THE FOLLOWING TEXT:

    DC PHOTOVOLTAIC POWER SOURCE:(NUMBERS PER PROJECT DATA)
    OPERATING CURRENT = XX.X AMPS
    OPERATING VOLTAGE = XXX VDC
    MAXIMUM SYSTEM VOLTAGE = XXX.X VDC
    SHORT CIRCUIT CURRENT = XX.X AMPS"

18. NEC ART. 690.14. EACH AC DISCONNECT SHALL BE LABELED WITH: "SOLAR PHOTOVOLTAIC POWER SYSTEM AC DISCONNECT". LABEL SHALL BE 1" X 4" MINIMUM WITH UV RESISTANT BLACK LETTERS ON YELLOW BACKGROUND.

19. NEC ART. 690.17. EACH AC DISCONNECT SHALL ALSO BE LABELED WITH : "WARNING!- ELECTRIC SHOCK HAZARD-DO NOT TOUCH TERMINALS. TERMINALS ON BOTH LINE AND LOAD SIDES MAY BE ENERGIZED IN THE OPEN POSITION". LABEL SHALL BE 1" X 4" MINIMUM WITH UV RESISTANT BLACK LETTERS ON YELLOW BACKGROUND.

DEMOLITION NOTES

1. THE DEMOLITION PLAN SHOWS ALL EXISTING EQUIPMENT TO BE REMOVED AND TO BE RELOCATED. CONTRACTOR TO REFER TO THE ORIGINAL RENOVATION DESIGN AS-BUILTS, FOR ADDITIONAL INFORMATION ON EXISTING AS-BUILTS CONDITION. IT IS THE RESPONSIBILITY OF THE CONTRACTOR TO FIELD VERIFY ALL EXISTING CONDITIONS OF THE ELECTRICAL SYSTEMS TO BE SCHEDULED FOR DEMOLITION.

2. EXISTING CONDUIT FEEDS UP THROUGH FLOOR SHALL BE CUT OFF AND PLUGGED FLUSH WITH FLOOR WHERE EXISTING WALLS, ETC. ARE REMOVED. REMOVE CONDUCTORS FROM THIS POINT BACK TO SOURCE.

3. IT SHALL BE THE RESPONSIBILITY OF THE CONTRACTOR TO MAINTAIN CONTINUITY OF ALL ELECTRICAL SYSTEMS, EQUIPMENT, ETC., REMAINING IN OPERATION WHICH ARE BEING FED BY AN ABANDONED OUTLET. MAINTAINING CONTINUITY SHALL CONSIST OF REROUTING CONDUIT, WIRING, ETC., AS REQUIRED.

4. EXISTING CIRCUITS WHICH ARE REMOVED AND NOT REUSED SHALL BE IDENTIFIED ON THE PANEL SCHEDULE AS "SPARE".

5. THE CONTRACTOR SHALL COORDINATE WITH THE OWNER PRIOR TO REMOVAL OF EXISTING ELECTRICAL EQUIPMENT, AND TURN OVER REMOVED EQUIPMENT THAT THE OWNER REQUESTS IN AN "AS-FOUND" CONDITION. EQUIPMENT THAT IS TO BE TURNED OVER SHALL BE BOXED AND TAGGED TO IDENTIFY THE SPECIFIC EQUIPMENT.

6. IN SOME INSTANCES, IT MAY BE NECESSARY FOR THE CONTRACTOR TO TEMPORARILY RELOCATE, REROUTE, ETC., EXISTING ELECTRICAL EQUIPMENT. THIS SHALL BE DONE SO THAT THE SYSTEMS ARE IN COMPLETE, OPERABLE, CONDITION AS CONSTRUCTION PROCEEDS.

7. ALL ABANDONED OUTLETS SHALL BE COVERED AND PATCHED TO MATCH THE FINISH OF SURROUNDING WALL OR CEILING.

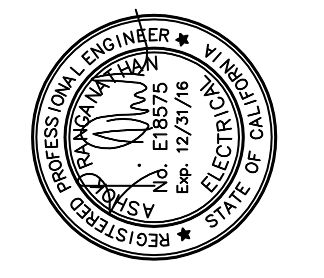

NO.	REVISIONS	DATE
1	DESIGN DEVELOPMENT PACKAGE	2/17/16
2	CONSTRUCTION DOCUMENT PACKAGE	3/18/16
3	PLAN CHECK SUBMITTAL	3/18/16

TTG : STRUCTURAL : MECHANICAL : ELECTRICAL : CIVIL
TMAD TAYLOR & GAINES
300 North Lake Avenue, 14th Floor
Pasadena, California 91101
Phone: 626.463.2800 Fax: 626.463.2801
www.ttgcorp.com
Project No. 0216.119.00

SAA ASSOCIATES
P.O. BOX 93786,
PASADENA, CA 91109
T: 818-437-8452

PROJECT:
MADRONA MARSH NATURE CENTER IMPROVEMENTS

ADDRESS
3201 PLAZA DEL AMO BOULEVARD TORRANCE, CA 90503

DRAWING TITLE
GENERAL, PV AND DEMOLITION NOTES

PRINT DATE: 03/17/2016
PROJECT NUMBER: XXXX
APPLICATION NUMBER:
SHEET NUMBER
E002

R:\22CAD\Tmad Projects\2016\0216119.00\MPE\E002.dwg 03/17/2016 16:25

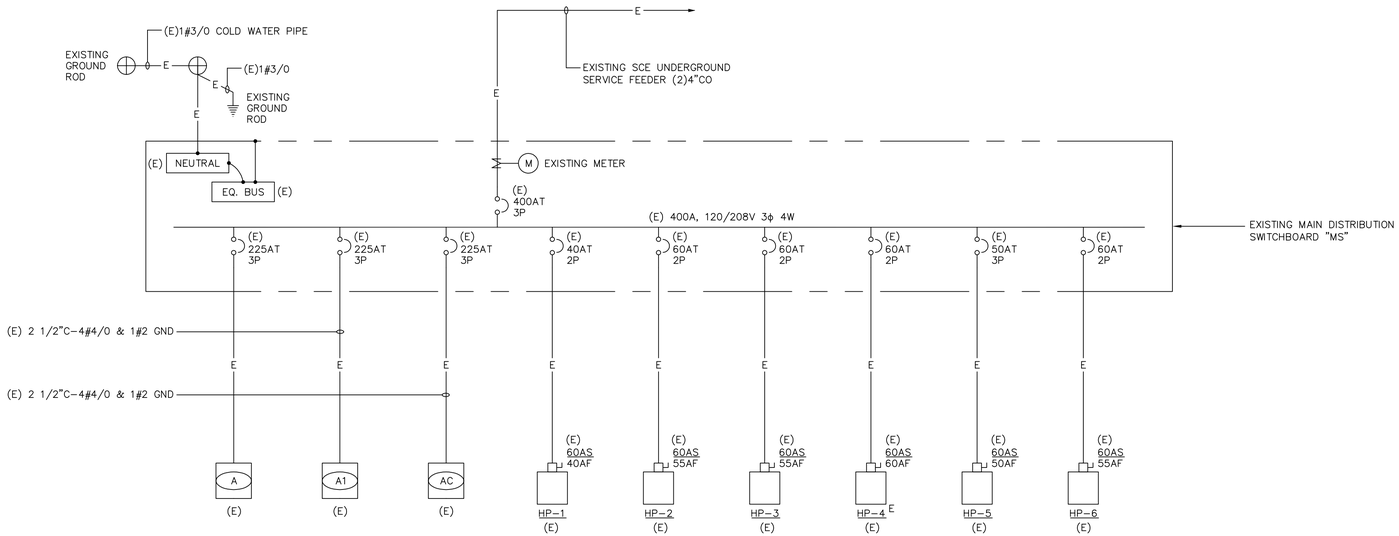

1 EXISTING NORMAL POWER SINGLE LINE DIAGRAM

SCALE: NTS

GENERAL NOTES:

1. ALL ELECTRICAL EQUIPMENT, DEVICES, CONDUIT AND WIRING SHALL BE NEW (SHOWN IN HEAVY LINES), UNLESS SPECIFICALLY INDICATED AS EXISTING (AND/OR SHOWN IN LIGHT LINES).
2. NEW BREAKER TO BE ADDED TO EXISTING SWITCHBOARD OR PANEL SHALL BE OF THE SAME MANUFACTURER, TYPE AND A.I.C. RATING AS EXISTING BREAKERS.
3. ALL CIRCUIT BREAKER IN PANEL BOARD SHALL BE FULLY RATED. SERIES RATED BREAKER SHALL NOT BE ACCEPTED.
4. ALL SWITCHES, CIRCUIT BREAKERS AND OTHER EQUIPMENT, AS SHOWN, SHALL HAVE TERMINATION PROVISIONS LISTED AND IDENTIFIED FOR USE WITH 75°C CONDUCTORS, AND ALL FEEDER CONDUCTORS, AND CONDUITS, ARE SIZED BASED ON USE OF 75°C COPPER WIRES TYPE THWN/THHN.
5. PROVIDE GROUNDING AND BONDING PER NEC ARTICLE 250 AS APPICABLE.
6. FEEDER LENGTHS SHOWN ARE APPROXIMATE AND ARE NOT TO BE USED FOR BIDDING.

KEY NOTES:

1. EXISTING 20A/1 POLE BREAKER CIRCUIT #14 AND 20A/1 POLE BREAKER CIRCUIT #16 TO BE DISCONNECTED, REMOVED AND REPLACED WITH NEW 30A/2 POLE BREAKER.

MOUNTING: SURFACE — PANEL"A1" (EXISTING) — LOCATION: STORAGE ROOM 112

VOLTAGE: 120/208V, 3PH, 4W — MIN. AIC SYM: 14,000AIC — AMP BUS 225A — MAIN CB LUGS ONLY

DESCRIPTION	VOLT-AMPERES PHASE A	PHASE B	PHASE C	LTG	REC	MISC	POLE	BKR	CIR	CIR	BKR	POLE	MISC	REC	LTG	VOLT-AMPERES PHASE A	PHASE B	PHASE C	DESCRIPTION
Existing Ltg Room 120	1344						1	20	1	2	20	1				1152			Existing Ltg Room 108
Existing Ltg Room 120, Patio, Corridor		1440					1	20	3	4	20	1					1024		Existing Ltg Room 115,116,117
Existing Ltg Room 120			1440				1	20	5	6	20	1						704	Existing Ltg Room 111,112,113,114
Existing Ltg Room 120	300						1	20	7	8	20	1				640			Existing Track Ltg Room 104,195
Existing Ltg Room 120		126					1	20	9	10	20	1					720		Existing Track Ltg Room 101
Existing Ltg Corridor			162				1	20	11	12	20	1						720	Existing Track Ltg Room 102
Existing Ltg Corridor	100						1	20	13	14	20	1				540			Existing Track Ltg Room 102
Existing Ltg Control Time Clock		250					1	20	15	16	20	1					540		Existing Track Ltg Room 102
Spare							1	20	17	18	20	1						420	Existing Track Ltg Room 102
Spare							1	20	19	20	20	1				540			Existing Track Ltg Room 102
Spare							1	20	21	22	20	1					900		Existing Track Ltg Room 102
Existing Ltg Exhibit Room 119			624				1	20	23	24	20	1						600	New TV Outlet Room 118
Existing Ltg Exhibit Room 119	624						1	20	25	26	20	1				720			New Switchlite Transformer
Existing Ltg Exhibit Room 119		624					1	20	27	28	20	1							Spare
Spare							1	20	29	30	20	1							Spare
Spare							1	20	31	32	20	1							Spare
Spare							1	20	33	34	20	1							Spare
Spare							1	20	35	36	20	1							Spare
Spare							1	20	37	38	20	1							Spare
Spare							1	20	39	40	20	1							Spare
Spare							1	20	41	42	20	1							Spare
VA PER PHASE	2368	2440	2226													3592	3184	2444	VA PER PHASE

TOTAL VA PER PHASE: 5960 | 5624 | 4670

TOTAL CONNECTED VA: 16254

CONTINUOUS LOAD 14934 x 1.25 = 18668 VA

+ OTHER = 1320 VA

TOTAL LOAD = 19988 VA — 55.48 AMPS @ 208/120V, 3Ph, 4W

3/15/2016 13:36

MOUNTING: SURFACE — PANEL"AC" (EXISTING) — LOCATION: STORAGE ROOM 112

VOLTAGE: 120/208V, 3PH, 4W — MIN. AIC SYM: 14,000AIC — AMP BUS 225A — MAIN CB LUGS ONLY

DESCRIPTION	VOLT-AMPERES PHASE A	PHASE B	PHASE C	LTG	REC	MISC	POLE	BKR	CIR	BKR	POLE	MISC	REC	LTG	VOLT-AMPERES PHASE A	PHASE B	PHASE C	DESCRIPTION
Existing Water Heat Pump	250						1	20	1	2	50	3			2000			Existing Water Heater
Existing UPS electrical room		600					1	20	3	4	_	_				2000		Existing Water Heater
Spare							1	20	5	6	_	_					2000	Existing Water Heater
Existing West Wall TC & Lighting	350						1	20	7	8	20	1			700			New Fountain Pump
Existing Outside Recept for Condensor		540					1	20	9	10	20	1						Spare
Spare							1	20	11	12	20	1					200	Existing EF-1
Spare							1	20	13	14	30	2			2500			New AC Disconnect Switch (1)
Spare							1	20	15	16	_	_				2500		_ (1)
Spare							1	20	17	18	20	1						Spare
Spare							1	20	19	20	20	1						Spare
Spare							1	20	21	22	20	1						Spare
Spare							1	20	23	24	20	1						Spare
Spare							1	20	25	26	20	1						Spare
Spare							1	20	27	28	20	1						Spare
Spare							1	20	29	30	20	1						Spare
Existing FCU#6	450						2	20	31	32	20	1						Spare
Existing FCU#6		450					_	_	33	34	20	1						Spare
Spare							1	20	35	36	20	2					1150	Existing FCU#5
Existing FCU 1+2	750						2	20	37	38	_	_			1150			Existing FCU#5
Existing FCU 1+2		750					_	_	39	40	20	2				1100		Existing FCU 3+4
Spare							1	20	41	42	_	_					1100	Existing FCU 3+4
VA PER PHASE	1800	2340													6350	5600	4450	VA PER PHASE

TOTAL VA PER PHASE: 8150 | 7940 | 4450

TOTAL CONNECTED VA: 20540

CONTINUOUS LOAD 7150 x 1.25 = 8938 VA

+ OTHER = 13390 VA

TOTAL LOAD = 22328 VA — 61.98 AMPS @ 208/120V, 3Ph, 4W

3/15/2016 13:38

THIS SINGLE LINE DIAGRAM HAS BEEN DEVELOPED BASED ON INFORMATION OBTAINED DURING 02/16 FIELD OBSERVATIONS LIMITED TO ACCESSIBLE EQUIPMENT ONLY, AND FROM THE FOLLOWING RECORD DRAWINGS:
"MADRONA MARSH NATURE CENTER" PROJECT, PREPARED BY BRYANT PALMER SOTO INC. ARCHITECTS AND ANTIERI & ASSOCIATES CONSULTING INGINEERS, INC. IN 06/99
JOB No. 224.101-24

REGISTERED PROFESSIONAL ENGINEER — ASHWIN PARIKH — No. E18955 — Exp. 12/31/16 — ELECTRICAL — STATE OF CALIFORNIA

NO.	REVISIONS	DATE
1	DESIGN DEVELOPMENT PACKAGE	2/17/16
2	CONSTRUCTION DOCUMENT PACKAGE	3/18/16
3	PLAN CHECK SUBMITTAL	3/18/16

TTG • STRUCTURAL • MECHANICAL • ELECTRICAL • CIVIL
TMAD TAYLOR & GAINES
300 North Lake Avenue, 14th Floor
Pasadena, California 91101
Phone: 626.463.2800 Fax: 626.463.2801
www.tgcorp.com Project No. 1216.119.00

SAA ASSOCIATES
P.O. BOX 93786,
PASADENA, CA 91109
T: 818-437-8452

PROJECT: MADRONA MARSH NATURE CENTER IMPROVEMENTS

ADDRESS: 3201 PLAZA DEL AMO BOULEVARD TORRANCE, CA 90503

DRAWING TITLE: ELECTRICAL SINGLE LINE DIAGRAM AND PANEL SCHEDULES

PRINT DATE: 03/17/2016

PROJECT NUMBER: XXXX

APPLICATION NUMBER:

SHEET NUMBER: E003

R:\2DCAD\Tmad Projects\2016\021619.00\MFE\E003.dwg 03/17/2016 16:25

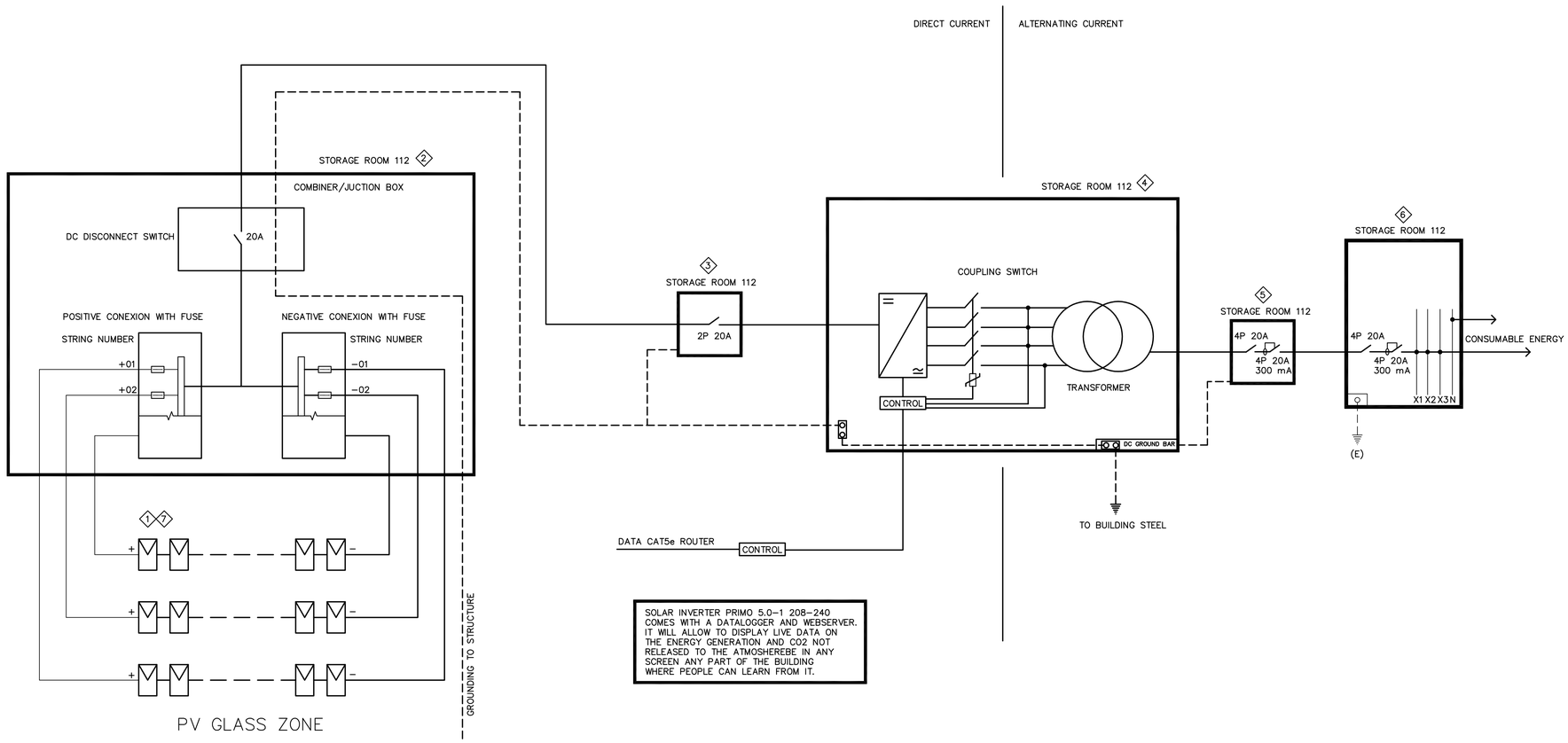

SOLAR INVERTER PRIMO 5.0–1 208–240 COMES WITH A DATALOGGER AND WEBSERVER. IT WILL ALLOW TO DISPLAY LIVE DATA ON THE ENERGY GENERATION AND CO2 NOT RELEASED TO THE ATMOSHEREBE IN ANY SCREEN ANY PART OF THE BUILDING WHERE PEOPLE CAN LEARN FROM IT.

PV SYSTEM BLOCK DIAGRAM
STAND ALONE, DIRECT CONSUMPTION PV SYSTEM

1

SCALE: NTS

PV GENERAL NOTES:

1. PV CONTRACTOR SHALL PROVIDE ENGINEER WITH SHADING MEASUREMENTS FROM THE FIELD AND A PROPOSED STRINGING ARRANGEMENT ONCE ARRAY MOUNTING STRUCTURE HAS BEEN BUILT. ENGINEERING APPROVAL IS REQUIRED ON FINAL PV MODULE STRING LAYOUT PLAN.
2. LOAD BREAKERS ARE GENERALLY NOT SHOWN IN ELECTRICAL PANELS ON THIS SHEET. SEE ELECTRICAL DRAWINGS FOR PANEL SCHEDULES. ALL PANELS SHALL INCLUDE A MAIN BREAKER AND THE MAIN BREAKER SHALL BE PHYSICALLY LOCATED AT THE OPPOSITE END OF THE BUS FROM ALL OTHER BREAKERS WHICH CAN FEED POWER TO THE SAME BUS (LIKE ALL PV BREAKERS, ETC.). ALL SINGLE DIRECTION LOAD BREAKERS SHALL BE LOCATED BETWEEN THE MAIN BREAKER AND THE OTHER BACKFEED BREAKERS IN ORDER TO MINIMIZE OVERALL BUS LOADING.
3. GROUND TERMINAL INSIDE INVERTER FOR ARRAY SHALL BE CONNECTED TO THE EQUIPMENT GROUNDING SYSTEM IN THE NEW BARN WHICH IS CONNECTED TO GROUND WIRES WHICH RUN BACK TO THE GROUNDING SYSTEMS AT THE POINT OF INTERCONNECTION. GROUND WIRES TO ROOF ARE OVERSIZED FOR SURGE PROTECTION. ALL EQUIPMENT SHALL BE PROPERLY GROUNDED PER THE REQUIREMENTS OF NEC ART. 250.
4. PLEASE NOTE THAT ONLY THE REQUIRED BREAKERS AND BUS SIZES FOR THE PV SYSTEM ARE SHOWN HERE AND THAT THERE MAY BE ADDITIONAL BREAKERS AND/OR REQUIREMENTS IN THE ELECTRICAL DRAWINGS WHICH ARE ALSO APPLICABLE. PV CONTRACTOR SHALL COORDINATE WITH ELECTRICAL CONTRACTOR ON ALL PV WORK THAT INTERFACES WITH SUCH EQUIPMENT.
5. ALL WIRES SHALL BE MARKED ON EACH END FOR UNIQUE IDENTIFICATION.
6. PV MODULE POSITIVE SHALL BE GROUNDED. ALL GROUNDED CONDUCTORS SHALL BE PROPERLY COLOR IDENTIFIED AS WHITE.

KEY NOTES:

1. PHOTOVOLTAIC GLASS
2. STRING COMBINER BOX
3. DC DISCONNECT SWITCH
4. SOLAR INVERTER FRONIUS PRIMO 5.0–1 208–240
5. AC DISCONNECT SWITCH
6. EXISTING ELECTRICAL PANEL "AC"
7. FOR ACTUAL PV ARRAY LAYOUT REFER TO DETAIL 2 ON SHEET E203.

SOLAR INVERTER FRONIUS PRIMO 5.0-1 208-240

INPUT DATA	FRONIUS PRIMO 5.0–1	OUTPUT DATA	FRONIUS PRIMO 5.0–1
RECOMMENDED PV POWER (kWp)	4.0–7.8	MAX. OUTPUT POWER 208/240	5000W
MAX. USABLE INPUT CURRENT (MPPT 1/MPPT 2)	18A/18A	MAX. CONTINUOUS OUTPUT CURRENT 208/240	24.0A/20.8A
TOTAL MAX. DC CURRENT	36A	RECOMMENDED OCPD/AC BREAKER SIZE 208/240	30A/30A
MAX. ARRAY SHORT CIRCUIT CURRENT	2x22.5A	CEC EFFICIENCY 208/240	95.5%
OPERATING VOLTAGE RANGE	80*–600V	MAX. EFFICIENCY	96.9%
MAX. INPUT VOLTAGE	600V	ADMISSABLE CONDUCTOR SIZE AC	AWG14 ... AWG6
NOMINAL INPUT VOLTAGE	420V	GRID CONNECTION	208/240
ADMISSABLE CONDUCTOR SIZE DC	AWG14 ... AWG6	FREQUENCY	60 Hz
MPP VOLTAGE RANGE	240–480V	TOTAL HARMONIC DISTORTION	< 5.0%
NUMBER OF MPPT	2	POWER FACTOR	0.85 – 1 ind./cap
DIMENTION: 16.9Wx24.7Hx8.1D			

NOTE:

THIS BASIC ONE–LINE DIAGRAM IS A GUIDE FOR THE ELECTRICAL INSTALLER IN ORDER TO SHOW A POSSIBLE INTERCONNECTION AND INVERTER MATCHING WITH THE ELECTRICAL PARAMETERS. FINAL ELECTRICAL DIAGRAM MUST BE PROVIDED BY THE INSTALLER INCLUDING THE NECESSARY PROTECTIONS AND COMPLYING WITH SPECIFICATIONS REQUIREMENTS.

REGISTERED PROFESSIONAL ENGINEER — ASHWIN PARAKANDAN — No. E14704 — Exp. 12/31/16 — ELECTRICAL — STATE OF CALIFORNIA

NO.	REVISIONS	DATE
1	DESIGN DEVELOPMENT PACKAGE	2/17/16
2	CONSTRUCTION DOCUMENT PACKAGE	3/18/16
3	PLAN CHECK SUBMITTAL	3/18/16

TTG • STRUCTURAL • MECHANICAL • ELECTRICAL • CIVIL
TMAD TAYLOR & GAINES
300 North Lake Avenue, 14th Floor
Pasadena, California 91101
Phone: 626.463.2800 Fax: 626.463.2801
www.tgcorp.com
Project No. 1216.119.00

SAA ASSOCIATES
P.O. BOX 93786,
PASADENA, CA 91109
T: 818-437-8452

PROJECT: MADRONA MARSH NATURE CENTER IMPROVEMENTS

ADDRESS: 3201 PLAZA DEL AMO BOULEVARD TORRANCE, CA 90503

DRAWING TITLE: PV SYSTEM BLOCK DIAGRAM

PRINT DATE: 03/17/2016

PROJECT NUMBER: XXXX

APPLICATION NUMBER:

SHEET NUMBER: E004

R:\22CAD\Tmad Projects\2016\2216119.00\MP\E\E004.dwg 03/17/2016 16:25

GENERAL NOTES:

1. COMBINE ALL HOMERUNS FOR CIRCUIT IN J-BOX PRIOR TO CONNECTING TO PANEL.
2. POWER WIRING MAY NOT BE COMBINE WITH ANY SIGNAL SYSTEM AND SHALL BE INSTALLED IN A SEPARATE RACEWAY.
3. ALL ELECTRICAL DEVICES SHALL BE PERMANENTLY IDENTIFIED BY CIRCUIT DESIGNATION.
4. USE NEMA 3R WEATHERPROOF EQUIPMENT FOR ALL EXTERIOR LOCATIONS.

KEY NOTES:

1. CONTRACTOR TO CONFIRM FINAL CONDUIT LOCATION AND STUB UP WITH ARCHITECT AND OWNER PRIOR TO COMMENCEMENT OF THIS PORTION OF THE WORK.
2. REFER TO SHEET E004 FOR PV SYSTEM BLOCK DIAGRAM.
3. RUN CONDUIT IN CEILING SPACE.

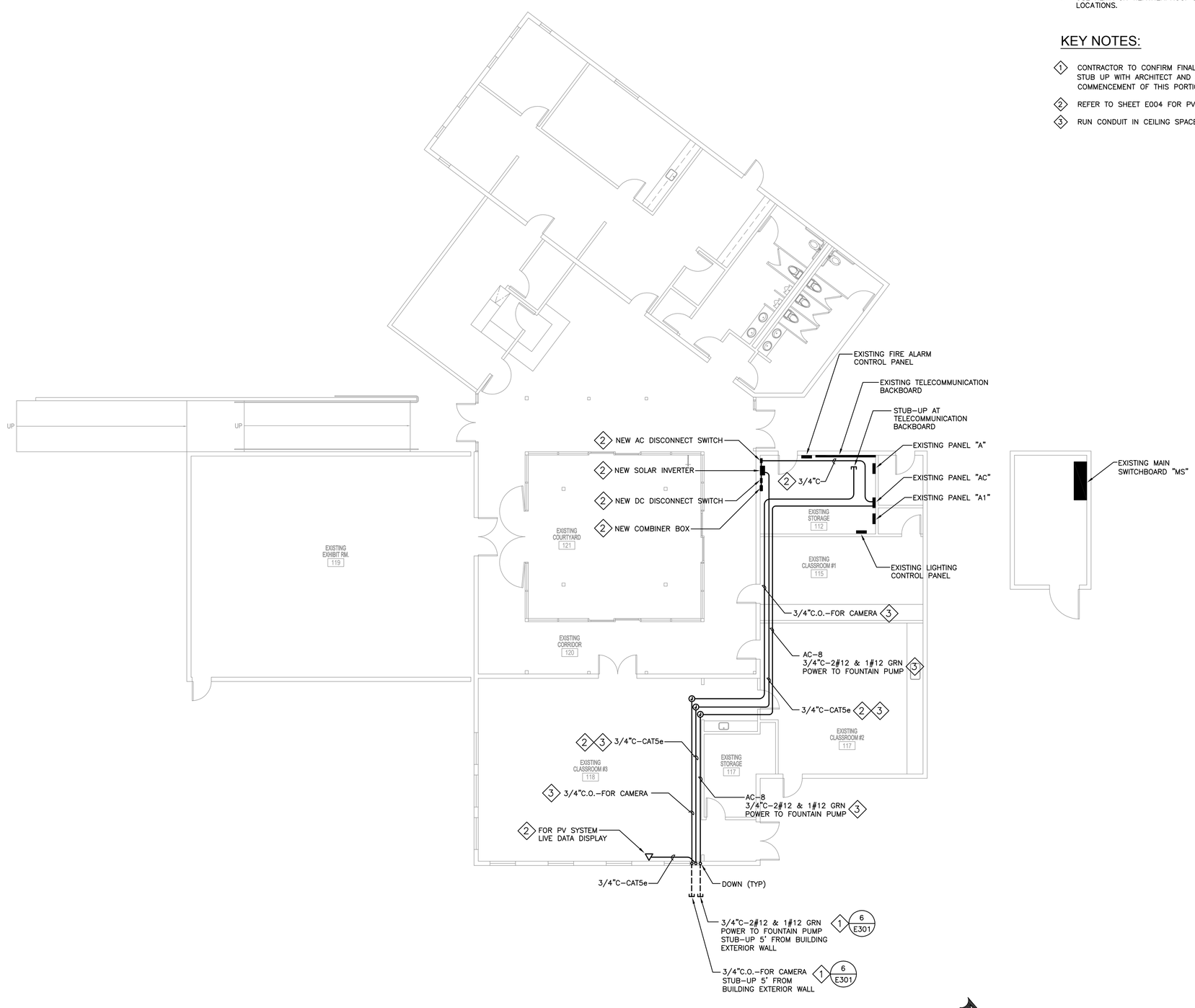

1 ELECTRICAL OVERALL FLOOR PLAN
SCALE: 1/8" = 1'-0"

REGISTERED PROFESSIONAL ENGINEER ASHWIN PARAKANDAN No. E18375 Exp. 12/31/16 ELECTRICAL STATE OF CALIFORNIA

NO.	REVISIONS	DATE
1	DESIGN DEVELOPMENT PACKAGE	2/17/16
2	CONSTRUCTION DOCUMENT PACKAGE	3/18/16
3	PLAN CHECK SUBMITTAL	3/18/16

TTG • STRUCTURAL • MECHANICAL • ELECTRICAL • CIVIL
TMAD TAYLOR & GAINES
300 North Lake Avenue, 14th Floor
Pasadena, California 91101
Phone: 626.463.2800 Fax: 626.463.2801
www.tgcorp.com
Project No. 1216.119.00

SAA ASSOCIATES
P.O. BOX 93786,
PASADENA, CA 91109
T: 818-437-8452

PROJECT:
MADRONA MARSH NATURE CENTER IMPROVEMENTS

ADDRESS
3201 PLAZA DEL AMO BOULEVARD TORRANCE, CA 90503

DRAWING TITLE
ELECTRICAL OVERALL FLOOR PLAN

PRINT DATE: 03/17/2016
PROJECT NUMBER: XXXX
APPLICATION NUMBER:
SHEET NUMBER
E101

R:\2CADTmad Projects\2016\02\1619.00\MPE\E101.dwg 03/17/2016 16:25

GENERAL NOTES:

1. COMBINE ALL HOMERUNS FOR CIRCUIT IN J–BOX PRIOR TO CONNECTING TO PANEL.
2. POWER WIRING MAY NOT BE COMBINE WITH ANY SIGNAL SYSTEM AND SHALL BE INSTALLED IN A SEPARATE RACEWAY.
3. ALL ELECTRICAL DEVICES SHALL BE PERMANENTLY IDENTIFIED BY CIRCUIT DESIGNATION.
4. USE NEMA 3R WEATHERPROOF EQUIPMENT FOR ALL EXTERIOR LOCATIONS.

KEY NOTES:

1. USE A MINIMUM OF 14 AWG THHN COOPER STRANDED WIRE FROM JUNCTION BOX TO THE CONTROLLER S200–4.
2. USE MINIMUM OF 14 AWG THHN STRANDED COOPER WIRE FROM THE TRANSFORMER TO THE CONTROLLER S200–4.
3. REFER TO DETAIL 7 ON SHEET E301 FOR SWITCHLITE SYSTEM CONNECTION DIAGRAM.
4. COORDINATE FINAL LOCATION OF SWITCH WITH ARCHITECT AND OWNER.

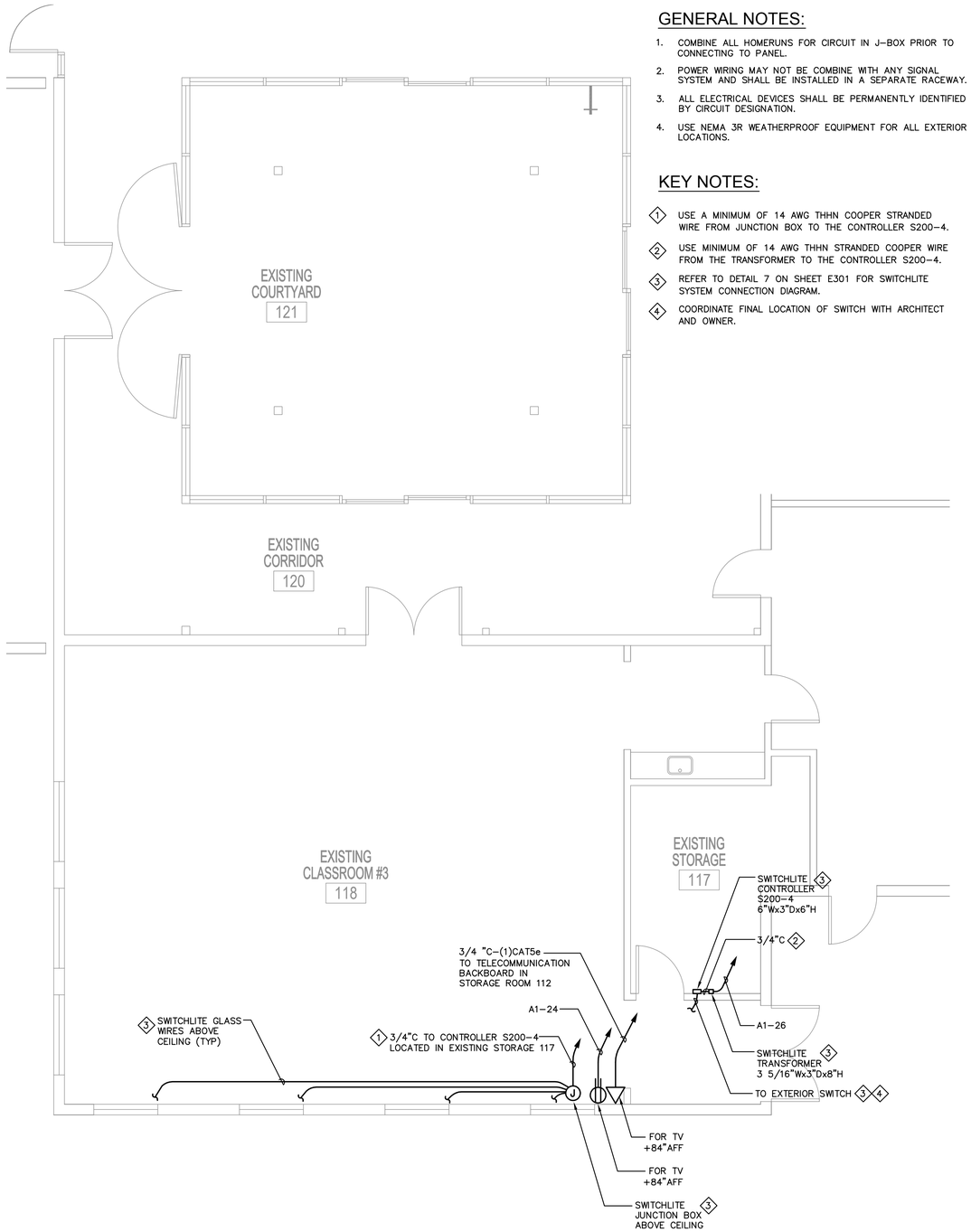

2 PARTIAL POWER & COMMUNICATION PLAN
SCALE: 1/4" = 1'–0"

REFERENCE NORTH

GENERAL NOTES:

1. ASBESTOS PRESENT IN INTERSTITIAL AREAS ON FIREPROOFING ON STRUCTURAL STEEL TRUSSES, OVERSPRAY ON I–BEAMS, AND ON CONCRETE DECKS. CONTRACTOR TO WEAR RESPIRATOR AND PROTECTIVE COVER IN ACCORDANCE WITH STATE AND FEDERAL REGULATIONS.
2. THE EXISTING BUILDING INCLUDING PORTIONS OF THE RENOVATED AREA SHALL REMAIN IN SERVICE DURING THE CONSTRUCTION PHASE OF THIS PROJECT. ANY MODIFICATIONS TO THE EXISTING ELECTRICAL SYSTEMS THAT MAY REQUIRE THE TEMPORARY INTERRUPTION OF EXISTING SERVICES SHALL BE COMPLETED AFTER NORMAL WORKING HOURS. PRE–SCHEDULE ANY SERVICE INTERRRUPTIONS WITH THE OWNER PRIOR TO STARTING ANY WORK.
3. RESEAL ALL PENETRATION OR OPENING THROUGH WALLS, CEILINGS, FLOORS, ETC. TO MANTAIN THE FIRE RATING OF STRUCTURE.
4. REFER TO SHEET E002 FOR DEMOLITION NOTES.

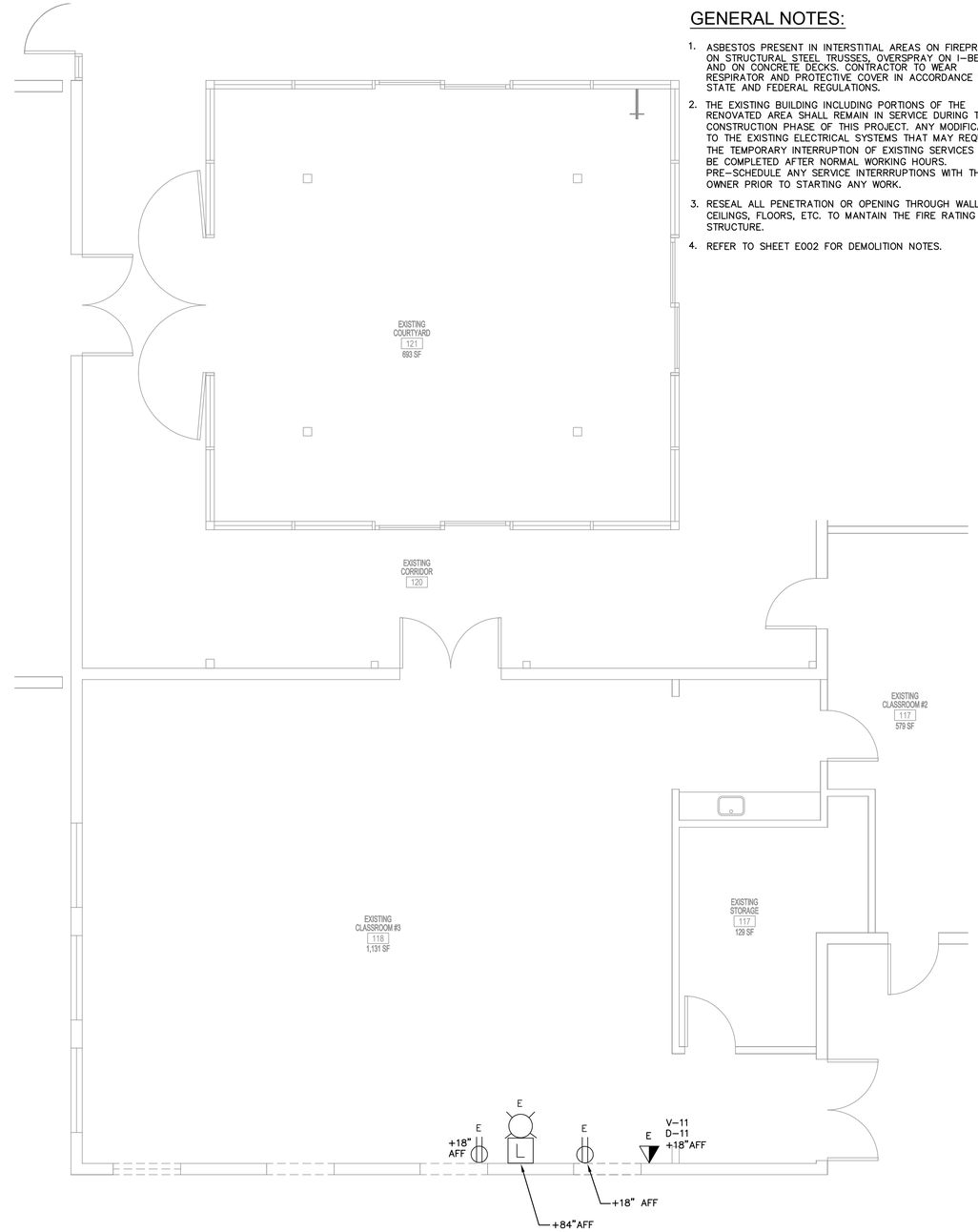

1 PARTIAL POWER AND COMMUNICATION DEMOLITION PLAN
SCALE: 1/4" = 1'–0"

REFERENCE NORTH

REGISTERED PROFESSIONAL ENGINEER ASHWIN PARAKANDAN No. E 18313 Exp. 12/31/16 ELECTRICAL STATE OF CALIFORNIA

NO.	REVISIONS	DATE
1	DESIGN DEVELOPMENT PACKAGE	2/17/16
2	CONSTRUCTION DOCUMENT PACKAGE	3/18/16
3	PLAN CHECK SUBMITTAL	3/18/16

TTG
• STRUCTURAL
• MECHANICAL
• ELECTRICAL
• CIVIL
TMAD TAYLOR & GAINES
300 North Lake Avenue, 14th Floor
Pasadena, California 91101
Phone: 626.463.2800 Fax: 626.463.2801
www.tgcorp.com
Project No. 1216.119.00

SAA ASSOCIATES
P.O. BOX 93786,
PASADENA, CA 91109
T: 818-437-8452

PROJECT:
MADRONA MARSH NATURE CENTER IMPROVEMENTS

ADDRESS
3201 PLAZA DEL AMO BOULEVARD TORRANCE, CA 90503

DRAWING TITLE
PARTIAL POWER AND COMMUNICATION DEMOLITION AND PROPOSED PLAN

PRINT DATE: 03/17/2016
PROJECT NUMBER: XXXX
APPLICATION NUMBER:
SHEET NUMBER
E202

R:\22CAD\Tmad Projects\2016\6216119.00\MP\E\E202.dwg 03/17/2016 16:25

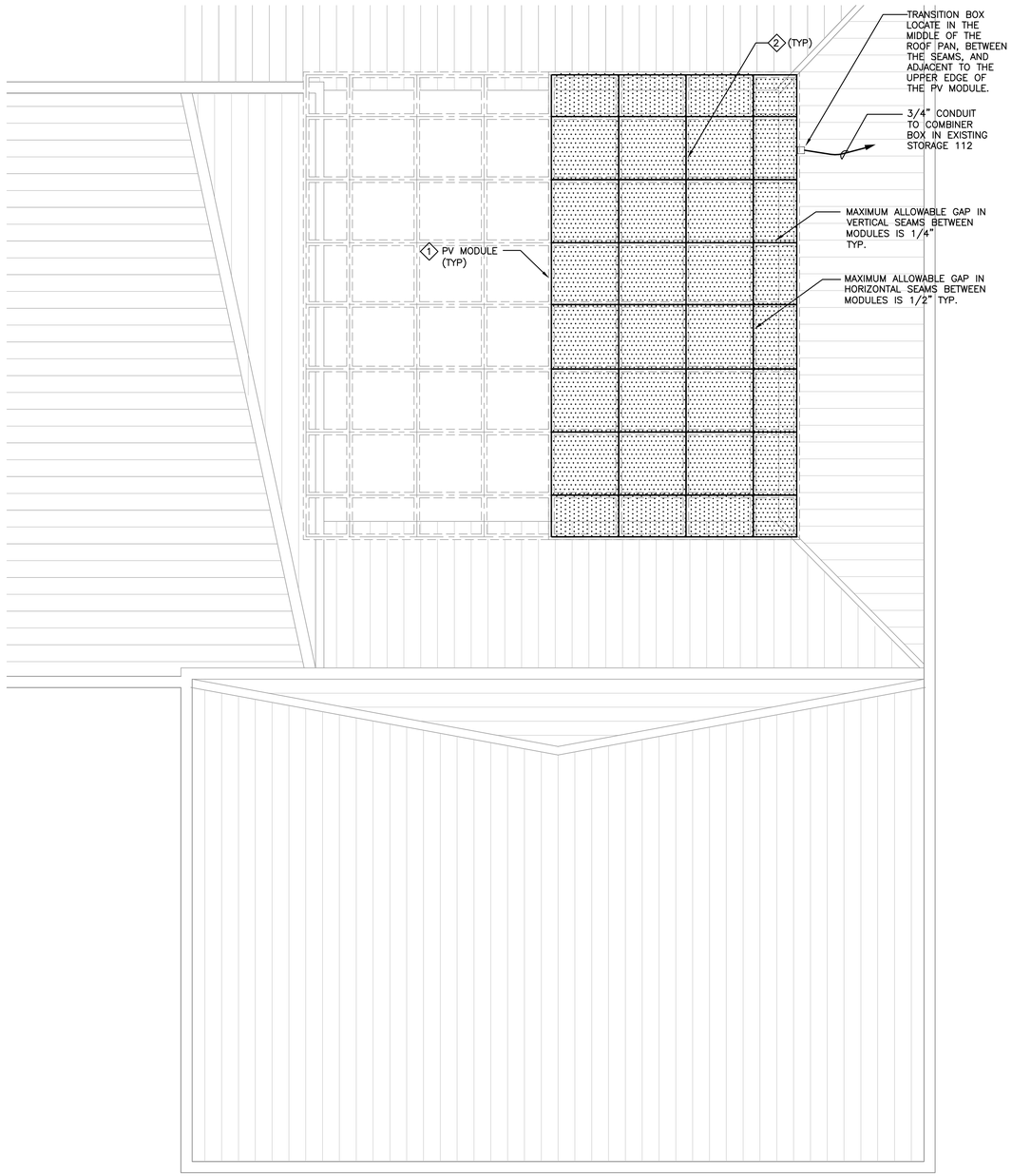

GENERAL NOTES:

1. PV MODULES SHALL BE MOUNTED FLUSH, LEVEL, AND ALL IN THE SAME PLANE. MAXIMUM ALLOWABLE DIFFERENCE BETWEEN FINISHED HEIGHT OF ANY TWO ADJACENT PV MODULES IS 1/16".
2. PV CONTRACTOR SHALL COORDINATE WITH GENERAL CONTRACTOR ON THE SCHEDULE OF ROOF CLIPS REQUIRED TO SECURE THE ROOF TO THE BUILDING.
3. PV CONTRACTOR SHALL COORDINATE WITH THE GENERAL CONTRACTOR ON THE LOCATION OF ROOF PENETRATIONS (FLASHINGS BY OTHERS).
4. ELECTRICAL CONTRACTOR SHALL STUB OUT CONDUIT ON THE ROOF AND SHALL LEAVE 2' OF WIRE COILED ON THE ROOF. ELECTRICAL CONTRACTOR SHALL STUB OUT CONDUIT IN THE CEILING OF THE EQUIPMENT ROOM OF THE NEW BARN AND SHALL LEAVE 25' OF WIRE COILED IN THE ROOM.

KEY NOTES:

1. REFER TO SHEET E004 FOR PV SYSTEM BLOCK DIAGRAM.
2. CONNECT PV MODULES DIRECTLY TO ROOF SEAMS WITH SEAM CLAMPS AND HOLD-DOWNS. NO ADDITIONAL STRUTS OR CHANNELS ARE ALLOWED. MAXIMUM ALLOWABLE HEIGHT FROM BOTTOM OF MODULE TO TOP OF SEAM=2". INSTALL SEAM CLAMPS ON THE LONG SIDE OF EACH MODULE. SEE E301 FOR MOUNTING DETAILS.

2 PARTIAL ROOF PLAN

SCALE: 1/4" = 1'-0"

REFERENCE NORTH

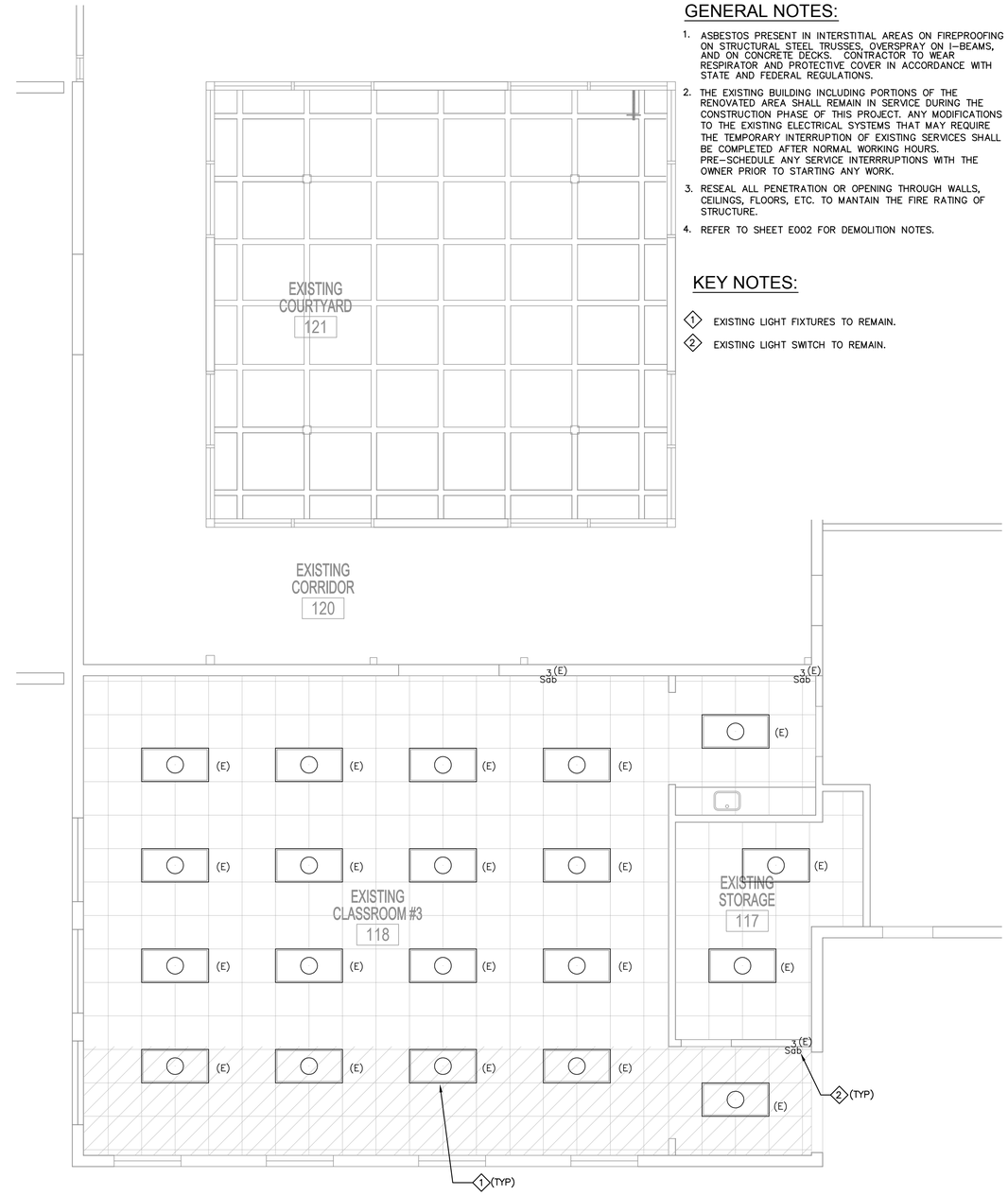

GENERAL NOTES:

1. ASBESTOS PRESENT IN INTERSTITIAL AREAS ON FIREPROOFING ON STRUCTURAL STEEL TRUSSES, OVERSPRAY ON I-BEAMS, AND ON CONCRETE DECKS. CONTRACTOR TO WEAR RESPIRATOR AND PROTECTIVE COVER IN ACCORDANCE WITH STATE AND FEDERAL REGULATIONS.
2. THE EXISTING BUILDING INCLUDING PORTIONS OF THE RENOVATED AREA SHALL REMAIN IN SERVICE DURING THE CONSTRUCTION PHASE OF THIS PROJECT. ANY MODIFICATIONS TO THE EXISTING ELECTRICAL SYSTEMS THAT MAY REQUIRE THE TEMPORARY INTERRUPTION OF EXISTING SERVICES SHALL BE COMPLETED AFTER NORMAL WORKING HOURS. PRE-SCHEDULE ANY SERVICE INTERRRUPTIONS WITH THE OWNER PRIOR TO STARTING ANY WORK.
3. RESEAL ALL PENETRATION OR OPENING THROUGH WALLS, CEILINGS, FLOORS, ETC. TO MANTAIN THE FIRE RATING OF STRUCTURE.
4. REFER TO SHEET E002 FOR DEMOLITION NOTES.

KEY NOTES:

1. EXISTING LIGHT FIXTURES TO REMAIN.
2. EXISTING LIGHT SWITCH TO REMAIN.

1 PARTIAL LIGHTING PLAN

SCALE: 1/4" = 1'-0"

REFERENCE NORTH

REGISTERED PROFESSIONAL ENGINEER — ASHWIN PARAKANDIAN — No. E 18313 — Exp. 12/31/16 — ELECTRICAL — STATE OF CALIFORNIA

NO.	REVISIONS	DATE
1	DESIGN DEVELOPMENT PACKAGE	2/17/16
2	CONSTRUCTION DOCUMENT PACKAGE	3/18/16
3	PLAN CHECK SUBMITTAL	3/18/16

TTG
• STRUCTURAL
• MECHANICAL
• ELECTRICAL
• CIVIL
TMAD TAYLOR & GAINES
300 North Lake Avenue, 14th Floor
Pasadena, California 91101
Phone: 626.463.2800 Fax: 626.463.2801
www.ttgcorp.com
Project No. 1216.119.00

SAA ASSOCIATES
P.O. BOX 93786,
PASADENA, CA 91109
T: 818-437-8452

PROJECT:
MADRONA MARSH NATURE CENTER IMPROVEMENTS

ADDRESS
3201 PLAZA DEL AMO BOULEVARD TORRANCE, CA 90503

DRAWING TITLE
PARTIAL LIGHTING AND ROOF PLAN

PRINT DATE: 03/17/2016
PROJECT NUMBER: XXXX
APPLICATION NUMBER:
SHEET NUMBER
E203

R:\22CADd\Tmad Projects\2016\02161 19.00\MPE\E203.dwg 03/17/2016 16:24

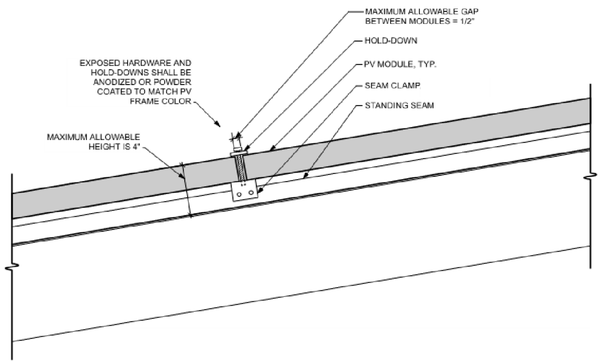

TYPICAL SECTION BETWEEN PV MODULES | NOT TO SCALE | 1

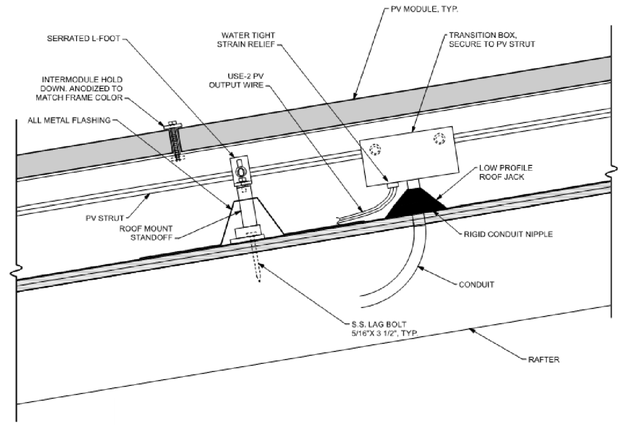

TYPICAL STRUT MOUNT SECTION WITH TRANSITION BOX BENEATH | NOT TO SCALE | 2

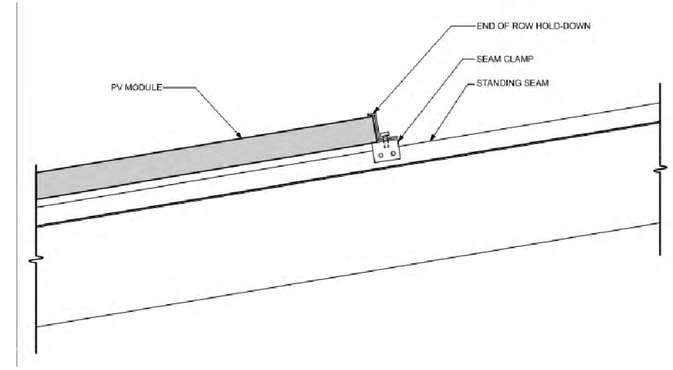

TYPICAL END OF ROW DETAIL | NOT TO SCALE | 3

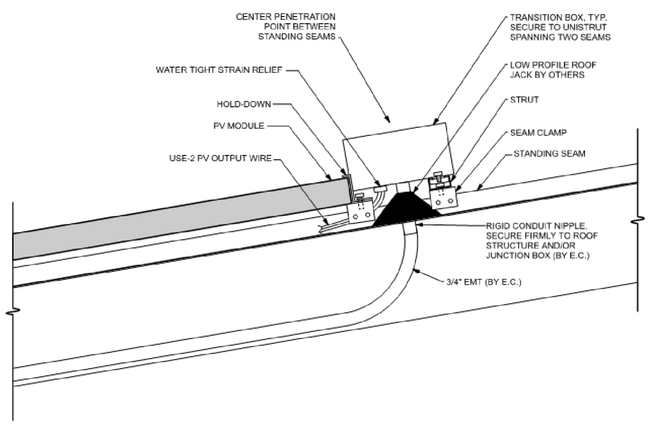

TYPICAL WIRING PENETRATION DETAIL | NOT TO SCALE | 4

KEY NOTES:

1. CONCRETE FLOOR OR WALL PER ARCHITECTURAL/STRUCTURAL DRAWINGS. MAX. DIA. OF THROUGH OPENING IS 12 1/4".
2. CONDUIT SIZE PER DRAWINGS.
3. FIRE STOP SYSTEM–TWO HOUR MOLDABLE PUTTY MATERIAL KNEADED BY HAND AND PACKED TIGHTLY INTO ANNULAR SPACE, FLUSH WITH FLOOR. IN WALL ASSEMBLIES, REQUIRED PUTTY THICKNESS TO BE INSTALLED SYMMETRICALLY ON BOTH SIDES OF WALL.

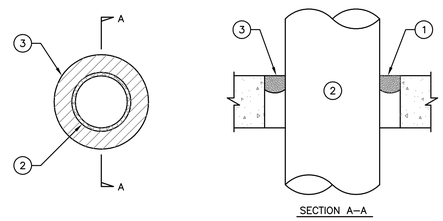

NOTE: MAX. DIA. OF OPENING IS 12 1/4". MINIMUM FILL MATERIAL THICKNESS OF 1/2" IS REQUIRED.

U.L. SYSTEM NO. CAJ1027

(NOTE: APPLY THIS DETAIL WHERE OCCURS)

CONDUIT PENETRATION THRU 2-HOUR CONCRETE FLOOR/WALL DETAIL | NOT TO SCALE | 5

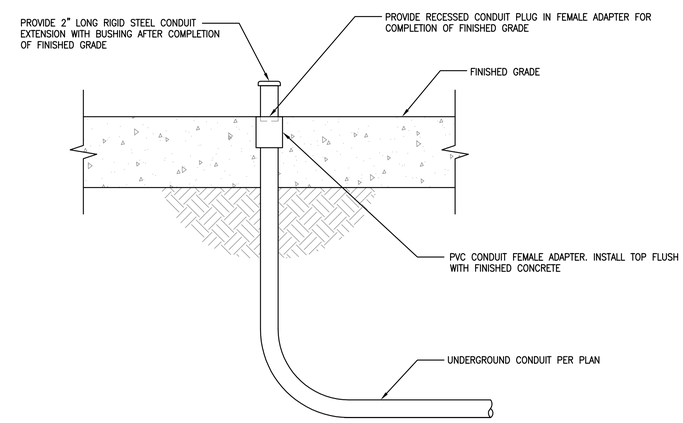

CONDUIT STUB-UP DETAIL | NOT TO SCALE | 6

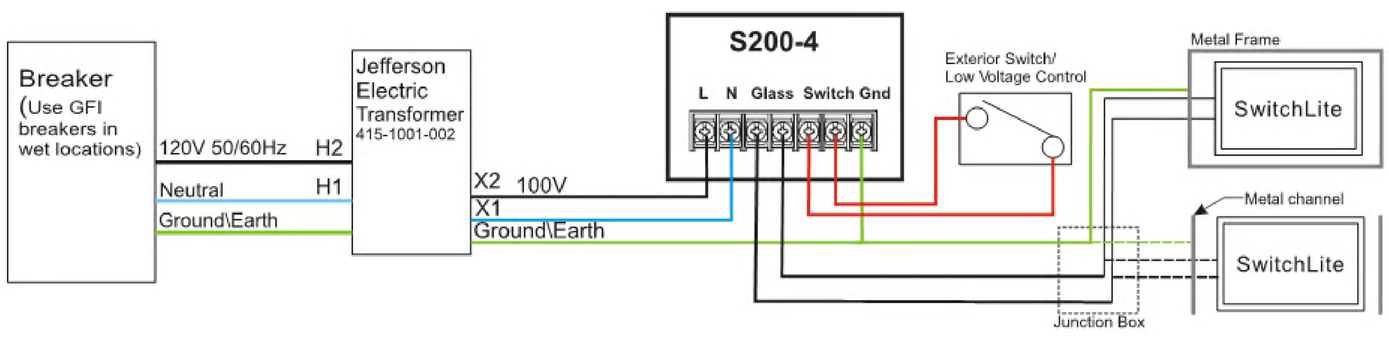

SWITCHLITE SYSTEM CONNECTION DIAGRAM | NOT TO SCALE | 7

REGISTERED PROFESSIONAL ENGINEER — ASHKAN SHAHBAZI — No. E18370 — Exp. 12/31/16 — ELECTRICAL — STATE OF CALIFORNIA

NO.	REVISIONS	DATE
1	DESIGN DEVELOPMENT PACKAGE	2/17/16
2	CONSTRUCTION DOCUMENT PACKAGE	3/18/16
3	PLAN CHECK SUBMITTAL	3/18/16

TTG
• STRUCTURAL
• MECHANICAL
• ELECTRICAL
• CIVIL
TMAD TAYLOR & GAINES
300 North Lake Avenue, 14th Floor
Pasadena, California 91101
Phone: 626.463.2800 Fax: 626.463.2801
www.tgcorp.com
Project No. 1216.119.00

SAA ASSOCIATES
P.O. BOX 93786,
PASADENA, CA 91109
T: 818-437-8452

PROJECT: MADRONA MARSH NATURE CENTER IMPROVEMENTS

ADDRESS: 3201 PLAZA DEL AMO BOULEVARD TORRANCE, CA 90503

DRAWING TITLE: ELECTRICAL DETAILS

PRINT DATE: 03/17/2016

PROJECT NUMBER: XXXX

APPLICATION NUMBER:

SHEET NUMBER: E301

R:\22CAD\Tmad Projects\2016\02161819.00\MPE\E301.dwg 03/17/2016 16:24