abbreviations

@	AT
A.B.	ANCHOR BOLT
A.C.	ASPHALTIC CONCRETE
ACOUS.	ACOUSTICAL
ALT.	ALTERNATE
ACS.	ACRES
A.D.	AREA DRAIN
ALUM.	ALUMINUM
A.T.	ASPHALT TILE
ADJ.	ADJUSTABLE
A.F.F.	ABOVE FINISH FLOOR
A.F.S.	ABOVE FINISH SURFACE
BD.	BOARD
BLK.	BLOCK
BLKG.	BLOCKING
BM.	BEAM
BOT.	BOTTOM
BLDG.	BUILDING
BET.	BETWEEN
C.L.	CENTER LINE
C.B.	CATCH BASIN
CEM.	CEMENT
CER.	CERAMIC
C.I.P.	CAST IRON PIPE
CLG.	CEILING
CLO.	CLOSET
CLR.	CLEAR
C.O.	CLEAN OUT
COL.	COLUMN
COM.	COMMON
CONC.	CONCRETE
CONT.	CONTINUOUS
C.W.	COLD WATER
C.T.	CERAMIC TILE
C.YD.	CUBIC YARD
DET.	DETAIL
D.F.	DRINKING FOUNTAIN
D.D.	DOOR DIMENSION
DIA.	DIAMETER
DRWG.	DRAWING
D.S.	DOWNSPOUT
D.W.	DISHWASHER
DR.	DOOR
DIM.	DIMENSION
EA.	EACH
ELEC.	ELECTRICAL
ELEV.	ELEVATION
ENCL.	ENCLOSURE
EXH.	EXHAUST
EXIST.	EXISTING
EXP.	EXPANSION
EXT.	EXTERIOR
E.J.	EXPANSION JOINT
F.D.	FLOOR DRAIN
F.E.C.	FIRE EXTINGUISHER CABINET
F.G.	FUEL GAS
F.H.C.	FIRE HOSE CABINET
FIN.	FINISH
FLR.	FLOOR
FLRG.	FLOORING
FTG.	FOOTING
F. GL.	FIXED GLASS
F.S.	FLOOR SINK
FLUOR.	FLUORESCENT
F.O.C.	FACE OF CONCRETE
F.O.S.	FACE OF STUD
F.F.	FINISH FLOOR
F.J.	FLOOR JOIST
F.O.F.	FACE OF FINISH
F.O.M.	FACE OF MASONRY
GA.	GAUGE
GALV.	GALVANIZED
G.I.	GALVANIZED IRON
GL.	GLASS
GR.	GRADE
GYP. BD.	GYPSUM BOARD
G.D.	GARBAGE DISPOSAL
H.B.	HOSE BIBB
HWD.	HARDWOOD
HGT.	HEIGHT
H.PT.	HIGH POINT
HDR.	HEADER
HTR.	HEATER
H.W.	HOT WATER
HORIZ.	HORIZONTAL
H.C.	HOLLOW CORE
I.D.	INSIDE DIAMETER
INT.	INTERIOR
INSUL.	INSULATION
INV.	INVERT
I.P.S.	IRON PIPE SIZE
I.I.C.	IMPACT INSULATION CLASS

JAN.	JANITOR
JST.	JOIST
JT.	JOINT
K.C.	KEENE'S CEMENT
KIT.	KITCHEN
LAM.	LAMINATE(D)
LAV.	LAVATORY
LGTH	LENGTH
LKR.	LOCKER
MIN.	MINIMUM
MAS.	MASONRY
MAX.	MAXIMUM
MECH.	MECHANICAL
MEMB.	MEMBRANE
MET.	METAL
M.H.	MANHOLE
MISC.	MISCELLANEOUS
M.O.	MASONRY OPENING
M.R.	MOISTURE RESISTANT
MFG.	MANUFACTURER
N.I.C.	NOT IN CONTRACT
NO.	NUMBER
NOM.	NOMINAL
N.T.S.	NOT TO SCALE
OBSC.	OBSCURE
O.C.	ON CENTER
O.D.	OUTSIDE DIAMETER
OFF.	OFFICE
OPG.	OPENING
OV.	OVEN
OVFL.	OVERFLOW
OPP.	OPPOSITE
PL.	PROPERTY LINE/PLATE
PARTN	PARTITION
PLAS.	PLASTER
PLYWD.	PLYWOOD
PR.	PAIR
P.L.	PLASTIC LAMINATE
R.	RISER
RAD.	RADIUS
REINF.	REINFORCING
RESIL.	RESILIENT
RD.	ROOF DRAIN
RM.	ROOM
R.O.	ROUGH OPENING
REF.	REFRIGERATOR
REQ'D.	REQUIRED
S.C.	SOLID CORE
SHT.	SHEET
SIM.	SIMILAR
SHTG.	SHEATHING
SQ.	SQUARE
STD.	STANDARD
STL.	STEEL
STRUCT.	STRUCTURAL
S.S.	STAINLESS STEEL
SUSP.	SUSPENDED
SPECS.	SPECIFICATIONS
STOR.	STORAGE
S.T.C.	SOUND TRANSMISSION CLASS
S.F.	SQUARE FOOT
TEL.	TELEPHONE
TERR.	TERRAZZO
T & G	TONGUE AND GROOVE
T.O.C.	TOP OF CURB
T.O.W.	TOP OF WALL
TYP.	TYPICAL
THRU	THROUGH
TEMP.	TEMPERED
T.O.P.	TOP OF PARAPET
T.	TREAD
T.O.PL.	TOP OF PLATE
U.	URINAL
U.N.O.	UNLESS NOTED OTHERWISE
VERT.	VERTICAL
VEST.	VESTIBULE
V.C.T.	VINYL COMPOSITION TILE
W/	WITH
WAINS.	WAINSCOT
W.C.	WATER CLOSET
WD.	WOOD
WH.	WATER HEATER
WP.	WATERPROOF

symbols

WOOD STUD

INSULATION

MASONRY

FINISH WOOD

CERAMIC

GYPSUM BOARD

PLASTER

PLYWOOD

CONCRETE

METAL

INTERIOR ELEVATION — SHT. NO. / DET. NO.

WINDOW LETTER

DOOR NUMBER

SECTION DESIGNATION
SHEET NUMBER

DETAIL NUMBER
SHEET NUMBER

GRID LINE

KEY NOTE

EXTERIOR COLOR
& MATERIAL

PROJECT INFORMATION

project: Tenant Improvement/Accessibility Upgrades For:

CITY OF TORRANCE
PERSONNEL BUILDING
3231 Torrance Blvd.
Torrance, CA 90503

owner: City of Torrance Department of General Services 3350 Civic Center Drive
Torrance, CA 90503
Phone: (310) 375-0922

legal description: That portion of Lot 5, Tract No. 7873, in the City of Torrance, County of Los Angeles, State of California, as shown on map recorded in Book 109, pages 99 and 100, of Maps, in the Office of the Recorder of said County, described as follows:
Commencing at a point in the center line of Torrance Boulevard, formerly Redondo Boulevard, distant thereon North 72d 23' 25" West 728.14 feet from the intersection of said center line of Maple Avenue as said center lines as shown on Map of Tract No. 14958, recorded in Book 405, pages 31, 32 & 33, of said Maps, thence North 17d 36' 35" East 50.00 feet to the northerly line of said Torrance Boulevard, being the true point of beginning, thence North 17d 36' 35" East 350.00 feet, thence North 72d 23' 25" West 350.00 feet, thence South 17d 36' 35" West 350.00 feet to said Northerly line, thence South 72d 23' 25" East along said boulevard, 350.00 feet to the true point of beginning.

zone: PU - Public Use

scope of work: Interior tenant improvements to an existing office building consisting of the removal/replacement of the existing single and multi-accommodation restrooms, supply room, office space and janitors closet. Exterior improvements include upgrades to the existing accessible path of travel by adding new curb ramps/conc. walkway, restriping of existing parking, the replacement of a portion of the existing glazing system with new exit door, new conc. slab & the addition of new storefront glazing system which will enclose a new conference room.

occupancy: B

construction type: V-B (non sprinklered)

applicable code: 2010 California Building Code

building data:

existing gross building area:	10,978 s.f.
proposed addition:	208 s.f.
total area:	11,186 s.f.

building department notes

1. SIGNAGE TO BE APPROVED UNDER SEPARATE PERMIT.
2. ADDITIONAL DIRECTIONAL EXIT SIGNS SHALL BE PROVIDED WHERE DETERMINED BY FIRE DEPARTMENT FIELD INSPECTOR.
3. THE USE OF ROLLED STEEL SECTIONS AND /OR BOLTS MANUFACTURED OUTSIDE THE UNITED STATES WILL REQUIRE VERIFICATION THAT THE PRODUCTS COMPLY WITH THE APPLICABLE ASTM STANDARDS. MILL CERTIFICATES WILL BE REQUIRED FOR ALL STEEL. STEEL GRADES OTHER THAT ASTM-A36 WILL REQUIRE TESTING BY AN APPROVED LABORATORY. ALL FOREIGN BOLTS MUST BE APPROVED BY THE BUILDING OFFICIAL PRIOR TO THEIR USE.
4. SUBMITTAL DOCUMENTS FOR DEFERRED SUBMITTAL ITEMS SHALL BE SUBMITTED TO THE ARCHITECT OR ENGINEER OF RECORD WHO SHALL REVIEW THEM AND FORWARD THEM TO THE BUILDING OFFICIAL WITH A NOTATION INDICATING THAT THE DEFERRED SUBMITTAL DOCUMENTS HAVE BEEN REVIEWED AND THEY HAVE BEEN FOUND IN GENERAL CONFORMANCE WITH THE DESIGN OF THE BUILDING. THE DEFERRED SUBMITTAL ITEMS SHALL NOT BE INSTALLED UNTIL THEIR DESIGN AND SUBMITTAL DOCUMENTS HAVE BEEN APPROVED BY THE BUILDING OFFICIAL (SECTION 106.4.4.2)
5. CERTIFICATE OF WORKMEN'S COMPENSATION INSURANCE MUST BE ON FILE WITH BUILDING AND SAFETY BEFORE A PERMIT CAN BE ISSUED.
6. THE PATH OF EXIT TRAVEL TO AND WITHIN EXITS IN THIS BUILDING SHALL BE IDENTIFIED BY EXIT SIGNS CONFORMING TO THE REQUIREMENTS OF SECTION 1011 OF THE 2007 C.B.C.
7. PROVIDE VENTILATION IN ACCORDANCE WITH CHAPTER 12 OF C.B.C. 2007 EDITION SEE MECHANICAL PLANS
8. EVACUATION SIGNAGE SHALL BE PROVIDED PER TITLE 19, SECTION 3.09.
9. MECHANICAL, ELECTRICAL, AND PLUMBING SCOPE OF WORK ARE UNDER SEPARATE PERMITS.
10. MODIFICATION TO FIRE SPRINKLER SYSTEM TO BE APPROVED BY FIRE DEPT. UNDER SEPARATE PERMIT.

allowable area justification:

ALLOWABLE AREA

$A_a = \{ A_t + [A_t \times I_f] + [A \times I_s] \}$

$A_a = \{ [9,000] + [9,000 \times 0.75] + [0] \}$

$A_a = \{ [9,000] + [6,750] + [0] \}$

A_a = 15,750 SF PER FLOOR

$I_f = [F/P - 0.25] W/30$

F = 492'-2" (building perimeter with min. 30'-0" yard)

P = 492'-2" (total building perimeter)

$I_f = [1 - 0.25] 30/30$

$I_f = 0.75$

PROJECT TEAM

architect:

WITHEE MALCOLM ARCHITECTS, LLP
2251 W. 190TH STREET
TORRANCE, CA 90504
PHONE: (310) 217-8885 FAX: (310) 217-0425

structural engineer:

BUSHRA, TSAI INCORPORATED
2564 W. WOODLAND DR.
ANAHEIM, CA 92801
PHONE: (714) 522-0911 FAX: (714) 522-1149
CONTACT: MITCH TSAI

electrical engineer:

MONTROSS & ASSOCIATES
2081 BUSINESS CENTER DRIVE, SUITE 218
IRVINE, CA 92612
PHONE: (949) 553-9005 FAX: (949) 553-9007
CONTACT: JIM MONTROSS

mechanical engineer:

MONTROSS & ASSOCIATES
2081 BUSINESS CENTER DRIVE, SUITE 218
IRVINE, CA 92612
PHONE: (949) 553-9005 FAX: (949) 553-9007
CONTACT: JIM MONTROSS

plumbing engineer:

MONTROSS & ASSOCIATES
2081 BUSINESS CENTER DRIVE, SUITE 218
IRVINE, CA 92612
PHONE: (949) 553-9005 FAX: (949) 553-9007
CONTACT: JIM MONTROSS

SHEET INDEX

cover sheet

CS-01	PROJECT INFORMATION
CS-02	GENERAL NOTES
CS-03	GENERAL NOTES

architectural

A1-01	DEMOLITION SITE PLAN
A1-02	SITE PLAN
A2-01	DEMOLITION PLAN
A2-02	FLOOR PLAN
A2-03	REFLECTED CEILING PLAN & FRAMING PLAN
A2-04	FINISH PLAN
A3-01	PARTIAL ELEVATION, SECTION & DETAILS
A4-01	DOOR, HARDWARE SCHEDULE & DETAILS
A5-01	ENLARGED RESTROOM PLANS & ELEVATIONS
A5-02	INTERIOR ELEVATIONS
A6-01	SITE DETAILS
A6-02	MISCELLANEOUS DETAILS
A6-03	MISCELLANEOUS DETAILS

structural

ST-1	FLOOR PLAN AND DETAILS

mechanical

M1.0	GENERAL NOTES, ABBREVIATIONS, LEGENDS & SCHEDULES
M1.1	DEMOLITION PLAN
M2.0	RECONSTRUCTION PLAN
M3.0	HVAC DETAILS

electrical

E1.0	GENERAL NOTES, LEGEND & ABBREVIATIONS
E1.1	DEMOLITION PLAN
E2.0	POWER & LIGHTING RECONSTRUCTION PLAN
E3.0	PANEL SCHEDULE
E4.0	TITLE 24 FORMS
E4.1	TITLE 24 FORMS

plumbing

P1.0	GENERAL NOTES, ABBREVIATIONS, LEGENDS & SCHEDULES
P1.1	DEMOLITION PLAN
P2.0	RECONSTRUCTION PLAN

vicinty map

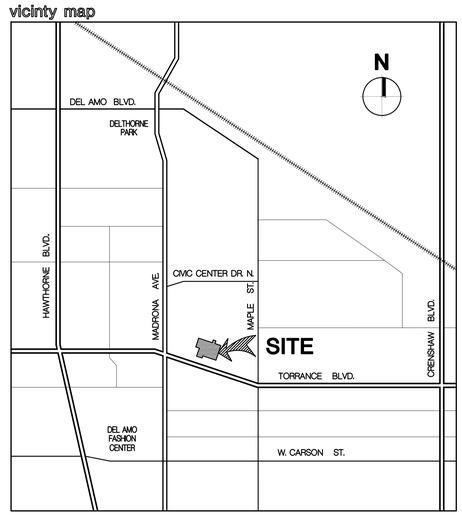

job no.	A9041.109-P
drawn	
submittal	
Plan Check Submittal	03.27.2012
Plan Check Re-Submittal	10.29.2012
Issue For Bid	10.29.2012
revision	
1 Client Revision	10-23-2012

all ideas, designs and plans represented by this drawing are the exclusive property of the withee malcolm partnership, architects, and shall not be reproduced in whole or in part without the express prior written permission of said architects, any unauthorized reuse of these plans other than for the project and location shown is prohibited.

Tenant Improvements / Accessibility Upgrades for :
CITY OF TORRANCE
PERSONNEL BUILDING
3231 Torrance Boulevard, Torrance, CA 90503

OWNER : City of Torrance, Department of General Services
3350 Civic Center Drive, Torrance, CA 90503

WITHEE MALCOLM
ARCHITECTS, LLP

2251 W. 190th Street
Torrance, Ca 90504
t. 310.217.8885
f. 310.217.0425

sheet title **project information**

sheet **CS-01**

BID SET ONLY

notes (see sheet CS-3 for additional notes)

CALIFORNIA ARCHITECTURAL BARRIER LAWS - TITLE 24 (cont.')

STAIRWAYS

1. STAIRWAYS SHALL HAVE HANDRAILS ON EACH SIDE, AND EVERY STAIRWAY REQUIRED TO BE MORE THAN 88 INCHES IN WIDTH SHALL BE PROVIDED WITH NOT LESS THAN ONE INTERMEDIATE HANDRAIL FOR EACH 88 INCHES OF REQUIRED WIDTH. INTERMEDIATE HANDRAILS SHALL BE SPACED APPROXIMATELY EQUAL WITHIN THE ENTIRE WIDTH OF THE STAIRWAY. THE ENTIRE WIDTH OF THE STAIRWAY. SEC 1133B.4.1.1
2. HANDRAILS SHALL BE 34-INCHES TO 38 INCHES ABOVE THE NOSING OF THE TREADS. SEC 1133B.4.2.1
3. HANDRAILS SHALL EXTEND A MINIMUM OF 12 INCHES BEYOND THE TOP NOSING AND 12 INCHES PLUS THE TREAD WIDTH BEYOND THE BOTTOM NOSING. WHERE THE EXTENSION OF THE HANDRAIL IN THE DIRECTION OF THE STAIR RUN WOULD CREATE A HAZARD, THE EXTENSION SHALL BE MADE EITHER ROUNDED OR SMOOTHLY TO THE FLOOR, WALL, OR POST. SEC 1133B.2.2
4. WHERE THE STAIRS ARE CONTINUOUS FROM LANDING TO LANDING, THE INNER RAIL SHALL BE CONTINUOUS AND NEED NOT EXTEND OUT INTO THE LANDING.
5. ENDS SHALL BE RETURNED OR SHALL TERMINATE IN NEWEL POSTS OR SAFETY TERMINALS. SEC 1133B.4.2.3
6. HANDRAILS PROJECTING FROM A WALL SHALL HAVE A SPACE OF NOT LESS THAN 1 1/2 INCHES BETWEEN THE WALL AND THE HANDRAIL. SEC 1133B.4.2.5
7. THE HAND GRIP PORTION OF HANDRAILS SHALL BE NOT LESS THAN 1 1/2INCHES OR MORE THAN 2 INCHES IN CROSS - SECTIONAL DIMENSIONAL OR THE SHAPE SHALL PROVIDE AN EQUIVALENT GRIPPING SURFACE AND SHALL HAVE A SMOOTH SURFACE WITH NO SHARP CORNERS. SEC 1133B.4.2.6
8. THE UPPER APPROACH AND THE LOWER TREAD OF EACH INTERIOR STAIRS SHALL BE MARKED BY A STRIP OF CLEARLY CONTRASTING COLOR AT LEAST 2 INCHES WIDE AND PLACED PARALLEL TO AND MOT MORE THAN 1 INCH FROM THE NOSE OF THE STEP OR LANDING TO ALERT THE VISUALLY IMPAIRED. THE STRIP SHALL BE OF A MATERIAL THAT IS AT LEAST AS SLIP RESISTANT AS THE OTHER TREADS OF THE STAIRS. SEC 1133B.4.4
9. WHERE STAIRWAYS OCCUR OUTSIDE A BUILDING, THE UPPER APPROACH AND ALL TREADS SHALL BE MARKED BY A STRIP OF CLEARLY CONTRASTING COLOR AT LEAST 2 INCHES WIDE AND PLACED PARALLEL TO AND NOT MORE THAN 1 INCH FROM THE NOSE OF THE STEP OR LANDING TO ALERT THE VISUALLY IMPAIRED. THE STRIP SHALL BE OF A MATERIAL THAT IS AT LEAST AS SLIP RESISTANT AS THE OTHER TREADS OF THE STAIRS. A POINTED STRIP SHALL BE ACCEPTABLE. SEC 1133B.4.4
10. ALL TREAD SURFACES SHALL BE SLIP RESISTANT. WEATHER EXPOSED STAIRS AND THEIR APPROACHES SHALL BE DESIGNED SO THAT WATER WILL NOT ACCUMULATE ON WALKING SURFACES. TREADS SHALL HAVE SMOOTH, ROUNDED OR CHAMFERED EXPOSED EDGES, AND NO ABRUPT EDGES AT THE NOSING (LOWER FRONT EDGE). SEC 1133B.4.5.1
11. NOSING SHALL NOT PROJECT MORE THAN 1 1/2 INCH PAST THE FACE OF THE RISER BELOW. SEC 1133B.4.5.2
12. RISERS SHALL BE SUFFICIENTLY SOLID TO PREVENT THE PASSAGE OF OBJECTS LARGER THAN 1/4 INCH.
13. APPROVED STAIRWAY IDENTIFICATION SIGNS SHALL BE LOCATED AT EACH FLOOR LEVEL IN ALL ENCLOSED STAIRWAYS IN BUILDINGS FOUR OR MORE STORIES IN HEIGHT, TWO OR MORE STORIES IN HEIGHT FOR DSA/AC REQUIREMENTS. THE SIGN SHALL IDENTIFY THE STAIRWAY, INDICATE WHETHER THERE IS A ROOF ACCESS, THE FLOOR LEVEL, AND THE UPPER AND LOWER TERMINUS OF THE STAIRWAY. THE INFORMATION SHALL BE PRESENTED USING ARABIC NUMERALS AND RAISED BRAILLE SYMBOLS WHICH CONFORM TO SECTION 1117B.5.2 THE SIGN SHALL BE LOCATED APPROXIMATELY 5' ABOVE THE FLOOR LANDING IMMEDIATELY ADJACENT TO THE DOOR ON THE STRIKE SIDE. SIGNS SHALL COMPLY WITH THE REQUIREMENTS OF U.B.C. STD. NO. 10-2. SEC 1020.1.6.2

SIGNS AND IDENTIFICATION

1. THE INTERNATIONAL SYMBOL OF ACCESSIBILITY SHALL BE THE STANDARD USED TO IDENTIFY FACILITIES THAT ARE ACCESSIBLE TO AND USABLE BY THE PHYSICALLY HANDICAPPED. SEC 1117B.5.8.1
   - A. THE INTERNATIONAL SYMBOL OF ACCESSIBILITY SHALL CONSIST OF A WHITE FIGURE ON A BLUE BACKGROUND. THE BLUE SHALL BE EQUAL TO COLOR #15090 IN FEDERAL STANDARD 595B. SEC 1117B.5.8.1.1
   - B. CONTRACTED GRADE 2 BRAILLE SHALL BE USED WHERE BRAILLE SYMBOLS ARE SPECIFICALLY REQUIRED. DOTS SHALL BE 0.1 INCH ON CENTERS IN EACH CELL WITH 0.2 INCHES BETWEEN CELLS. DOTS SHALL BE RAISED A MINIMUM OF 0.025 INCH ABOVE THE BACKGROUND. SEC 1117B.5.6
   - C. LETTERS AND NUMBERS ON SIGNS SHALL HAVE A WIDTH TO HEIGHT RATIO OF BETWEEN 3:5 AND 1:1 AND A STROKE WIDTH TO HEIGHT RATIO BETWEEN 1:5 AND 1:10. SEC 1117B.5.3
   - D. CHARACTERS AND SYMBOLS SHALL CONTRAST WITH THEIR BACKGROUND, EITHER LIGHT CHARACTERS ON A DARK BACKGROUND OR DARK CHARACTERS ON LIGHT BACKGROUND. SEC 1117B.5.2
   - E. WHEN RAISED OR RECESSED CHARACTERS OR SYMBOLS ARE USED, THEY SHALL CONFORM TO THE FOLLOWING: SEC 1117B.5.5
     1. LETTERS AND NUMBERS ON SIGNS SHALL BE RAISED OR RECESSED 1/32" MINIMUM AND SHALL BE SANS SERIF CHARACTERS UPPERCASE CHARACTERS ACCOMPANIED BY GRADE 2 BRAILLE. SEC 1117B.5.5.1
     2. RAISED CHARACTERS OR SYMBOLS SHALL BE A MINIMUM OF 5/8" HIGH. SEC 1117B.5.5.2
     3. PICTORIAL SYMBOL SIGNS (PICTOGRAMS) SHALL BE ACCOMPANIED BY THE EQUIVALENT VERBAL DESCRIPTION PLACED DIRECTLY BELOW THE PICTOGRAM. THE BORDER DIMENSION OF THE PICTOGRAM SHALL BE A MINIMUM OF 6" IN HEIGHT. SEC 1117B.5.5.3
   - F. ALL BUILDINGS ENTRANCES THAT ARE ACCESSIBLE TO AND USABLE BY A PERSON WITH DISABILITIES AND AT EVERY MAJOR JUNCTION ALONG OR LEADING TO AN ACCESSIBLE ROUTE OF TRAVEL SHALL BE IDENTIFIED WITH A SIGN DISPLAYING THE INTERNATIONAL SYMBOL OF ACCESSIBILITY AND WITH ADDITIONAL DIRECTIONAL SIGNS, AS REQUIRED, TO BE VISIBLE TO PERSONS ALONG APPROACHING PEDESTRIAN WAYS. SEC 1127B.3
   - G. WHEN PERMANENT IDENTIFICATION IS PROVIDED FOR ROOMS AND SPACES, RAISED LETTERS SHALL BE PROVIDED AND SHALL BE ACCOMPANIED BY BRAILLE IN CONFORMANCE WITH SECTION 1117B.5.6 THRU 1117B.5.6.3. SIGNS SHALL BE INSTALLED ON THE WALL ADJACENT TO THE LATCH SIDE OF THE DOOR. WHERE THERE IS NO WALL SPACE ON THE LATCH SIDE, INCLUDING AT DOUBLE LEAF DOORS, SIGNS SHALL BE PLACED ON THE NEAREST ADJACENT WALL, PREFERABLY ON THE RIGHT. MOUNTING HEIGHT SHALL BE 60" ABOVE THE FINISH FLOOR TO THE CENTERLINE OF THE SIGN. MOUNTING LOCATION SHALL BE DETERMINED SO THAT A PERSON MAY APPROACH WITHIN 3" OF SIGNAGE WITHOUT ENCOUNTERING PROTRUDING OBJECTS OR STANDING WITHIN SWING OF A DOOR. SEC 1117B.5.7
   - H. CHARACTERS AND NUMBERS ON SIGNS SHALL BE SIZED ACCORDING TO THE VIEWING DISTANCE FROM WHICH THEY ARE TO BE READ. THE MINIMUM HEIGHT IS MEASURED USING AN UPPERCASE X. LOWER CASE CHARACTERS ARE PERMITTED. FOR SIGNS SUSPENDED OR PROJECTED ABOVE THE FINISH FLOOR IN COMPLIANCE WITH SECTION 1121 B, THE MINIMUM CHARACTER HEIGHT SHALL BE 3". SEC 1117B.5.4

CALIFORNIA ARCHITECTURAL BARRIER LAWS - TITLE 24 (cont.')

RAMPS

1. THE CROSS SLOPE OF A RAMP SURFACES SHALL BE NO GRATER THAN 1: 50. SEC 1133B.5.3.1
2. ALL OTHER PEDESTRIAN RAMPS SERVING PRIMARY ENTRANCES SHALL HAVE A MINIMUM WIDTH OF 48". SEC 1133B.5.2
3. HANDRAILS SHALL BE PLACED ON EACH SIDE OF EACH RAMP, SHALL BE CONTINUOUS THE FULL LENGTH OF THE RAMP ,SHALL BE 34" TO 38" ABOVE THE RAMP SURFACE, SHALL EXTEND A MINIMUM OF 1' BEYOND THE THE TOP AND BOTTOM OF THE RAMP, AND THE ENDS SHALL BE RETURNED. SEC 1133B.5.5.1
4. THE GRIP PORTION OF HANDRAILS SHALL BE NOT LESS THAN 1-1/4" NOR MORE THAN 1-1/2", OR THE SHAPE SHALL PROVIDE AN EQUIVALENT GRIPPING SURFACE, AND ALL SURFACES SHALL BE SMOOTH WITH NO SHARP CORNERS. HANDRAILS SHALL NOT ROTATE WITHIN THEIR FITTINGS. SEC 1133B.5.5.1
5. ANY WALL OR OTHER SURFACE ADJACENT TO HANDRAILS SHALL BE FREE OF SHARP OR ABRASIVE ELEMENTS. EDGES SHALL HAVE A MINIMUM RADIUS OF 1/8". SEC 1133B.5.5.1
6. OUTDOOR RAMPS AND THEIR APPROACHES SHALL BE DESIGNED AND CONSTRUCTED SO THAT WATER WILL NOT ACCUMULATE ON WALKING SURFACES. SEC 1133B.5.8
7. LANDINGS SHALL BE PROVIDED AT THE TOP AND BOTTOM OF EACH RAMP. INTERMEDIATE LANDINGS SHALL BE PROVIDED AT INTERVALS NOT EXCEEDING 30" RISE AND AT EACH CHANGE OF DIRECTION. SEC 1133B.5.4
   - A. TOP OF LANDING SHALL NOT BE LESS THAN 60" WIDE AND SHALL HAVE A LENGTH OF NOT LESS THAN 60" IN THE DIRECTION OF RAMP RUN.
   - B. THE WIDTH OF THE LANDING SHALL EXTEND 24" PAST THE STRIKE EDGE OF ANY DOOR OR GATE FOR EXTERIOR RAMPS AND 18" PAST THE STRIKE EDGE FOR INTERIOR RAMPS. SEC 1133B.5.4.4
   - C. INTERMEDIATE LANDING AT A CHANGE OF DIRECTION IN EXCESS OF 30 DEGREES AND BOTTOM LANDINGS SHALL HAVE 72" MIN. DIMENSION IN THE DIRECTION OF RUN. OTHER INTERMEDIATE LANDINGS SHALL HAVE A 60" MIN. DIMENSION IN THE DIRECTION OF RUN.
8. A WHEEL GUIDE RAIL SHALL BE PROVIDED, CENTERED 3" PLUS OR MINUS 1" ABOVE THE SURFACE OF THE RAMP. SEC 1133B.5.6.2

WALKS & SIDEWALKS

1. WALKS AND SIDEWALKS SHALL HAVE A CONTINUOUS COMMON SURFACE, NOT INTERRUPTED BY STEPS OR BY ABRUPT CHANGES IN LEVEL EXCEEDING 1/2", AND SHALL BE A MINIMUM OF 48" IN WIDTH. SEC 1133B.7.1
2. WHEN ABRUPT CHANGES IN LEVEL NOT EXCEEDING 1/2" OCCUR, THEY SHALL BE BEVELED WITH A SLOPE NO GREATER THAN 1:2, EXCEPT THAT LEVEL CHANGES NOT EXCEEDING 1/4" MAY BE VERTICAL. SEC 1133B.7.4
3. ABRUPT CHANGES IN LEVEL ALONG ANY ACCESSIBLE ROUTE EXCEEDING 1/2" SHALL COMPLY WITH THE REQUIREMENTS FOR CURB RAMPS. SEC 1133B.7.4
4. WHEN THE SLOPE IN THE DIRECTION OF TRAVEL OF ANY WALK EXCEEDS 1 VERTICAL TO 20 HORIZONTAL IT SHALL COMPLY WITH THE PROVISIONS OF SECTION 1007 AS A PEDESTRIAN RAMP. SEC 1133B.7.3
5. WALK AND SIDEWALK SURFACE CROSS SLOPES SHALL NOT EXCEED 1/4" PER FOOT EXCEPT WHEN THE ENFORCING AGENCY FINDS THAT DUE TO LOCAL CONDITIONS IT CREATES AN UNREASONABLE HARDSHIP, THE CROSS SLOPE CAN BE INCREASED TO A MAXIMUM OF 1/2" PER FOOT FOR DISTANCES NOT TO EXCEED 20'. SEC 1133B.7.1.3
6. WALK AND SIDEWALK SURFACES SHALL BE SLIP-RESISTANT AS FOLLOWS: SEC 1133B.7.1
   - A. SURFACES WITH A SLOPE OF LESS THAN 6% GRADIENT SHALL BE AT LEAST AS SLIP-RESISTANT AS THAT DESCRIBED AS A MEDIUM SALTED FINISH. SEC 1133B.7.1.1
   - B. SURFACES WITH A SLOPE OF 6% GRADIENT SHALL BE SLIP-RESISTANT. SEC 1133B.7.1.2
7. WALKS, SIDEWALKS AND PEDESTRIAN WAYS SHALL BE FREE OF GRATINGS WHENEVER POSSIBLE. FOR GRATINGS LOCATED IN THE SURFACE OF ANY OF THESE AREAS, GRID OPENINGS IN GRATINGS SHALL BE NO GRATER THAN 1/2" WIDE IN ONE DIRECTION. IF GRATINGS HAVE ELONGATED OPENINGS, THEY SHALL BE PLACED SO THAT THE LONG DIMENSION IS PERPENDICULAR TO THE DOMINANT DIRECTION OF TRAVEL. SEC 1133B.7.2

CORRIDORS AND AISLES

1. EVERY CORRIDOR SERVING AN OCCUPANT LOAD OF 10 OR MORE SHALL BE NOT LESS IN WIDTH THAN 44-INCHES. CORRIDORS AND HALLWAYS SERVING AN OCCUPANT LOAD OF LESS THAN 10 SHALL NOT BE LESS THAN 36 INCHES. SEC 1133B.3.1
2. REGARDLESS OF OCCUPANT LOAD, CORRIDORS IN GROUP R, DIVISION 3 OCCUPANCIES AND WITHIN DWELLING UNITS IN GROUP R, DIVISION 1 OCCUPANTS SHALL HAVE A MINIMUM WIDTH OF 36-INCHES. SEC 1017.2 EXCEPTION #3
3. CORRIDORS THAT EXCEED 200 FT. IN LENGTH SHALL: SEC 1133B.3.2 & 1120A.2
   - A. HAVE A MINIMUM CLEAR WIDTH OF 60" OR
   - B. HAVE, AT A CENTRAL LOCATION, A 60" x 60" MINIMUM WHEELCHAIR TURNING SPACE OR PASSING ALCOVE OR
   - C. HAVE, AT A CENTRAL LOCATION, AN INTERVENING CROSS OR TEE CORRIDOR, A MINIMUM OF 44" IN WIDTH.
4. EVERY PORTION OF EVERY BUILDING IN WHICH ARE INSTALLED SEATS, TABLES, MERCHANDISE, EQUIPMENT OR SIMILAR MATERIALS SHALL BE PROVIDED WITH AISLES LEADING TO AN EXIT. SEC 1133B.6.1
5. EVERY AISLE SHALL BE NOT LESS THAN 3 FEET WIDE IF SERVING ONLY ONE SIDE, AND NOT LESS THAN 3'-6" WIDE IF SERVING BOTH SIDES. SUCH MINIMUM WIDTH SHALL BE MEASURED AT THE POINT FARTHEST FROM AND EXIT, CROSS AISLE OR FOYER AND SHALL BE INCREASED BY 1 1/2" FOR EACH 5 FEET IN LENGTH TOWARD THE EXIT, CROSS AISLE OR FOYER WITH CONTINENTAL SEATING SIDE AISLES SHALL BE NOT LESS THAN 44" IN WIDTH. SEC 1133B.6.2

HAZARDS AND PROTRUDING OBJECTS

1. OBJECTS PROJECTING FROM WALLS (FOR EXAMPLE, TELEPHONES) WITH THEIR LEADING EDGES BETWEEN 27- INCHES AND 80-INCHES ABOVE THE FINISHED FLOOR SHALL PROTRUDE NO MORE THAN 4-INCHES INTO WALKS, HALLS, CORRIDORS, PASSAGEWAYS OR AISLES. OBJECTS MOUNTED WITH THEIR LEADING EDGES AT OR BELOW 27-INCHES ABOVE THE FINISHED FLOOR MAY PROTRUDE ANY AMOUNT INTO WALKS, HALL, CORRIDORS, PASSAGEWAYS, OR AISLES. FREESTANDING OBJECTS MOUNTED ON POSTS OR PYLONS MAY OVERHANG 12-INCHES MAXIMUM FROM 27-INCHES TO 80-INCHES ABOVE THE GROUND OR FINISHED FLOOR. PROTRUDING OBJECTS SHALL NOT REDUCE THE CLEAR WIDTH OF AN ACCESSIBLE ROUTE OR MANEUVERING SPACE. SEC 1133B.8.6.1
2. ANY OBSTRUCTION OVERHANGING A PEDESTRIAN WAY SHALL BE A MINIMUM OF 80-INCHES ABOVE THE WALKING SURFACE AS MEASURED TO THE BOTTOM OF THE OBSTRUCTION. SEC 1133B.8.2
3. WALKS, HALLS, CORRIDORS, PASSAGEWAYS, AISLES OR OTHER CIRCULATION SPACES SHALL HAVE 80-INCHES MINIMUM CLEAR HEAD ROOM. SEC 1133B.8.6.2
4. ABRUPT CHANGES IN LEVEL, EXCEPT BETWEEN A WALK OR SIDEWALK AND AN ADJACENT STREET OR DRIVEWAY, EXCEEDING 4-INCHES IN A VERTICAL DIMENSION, SUCH AS AT PLANTERS OR FOUNTAINS LOCATED IN OR ADJACENT TO WALKS, SIDEWALKS, OR OTHER PEDESTRIAN WAYS SHALL BE IDENTIFIED BY CURBS PROJECTING AT LEAST 6- INCHES IN HEIGHT ABOVE THE WALK OR SIDEWALK SURFACE TO WARN THE BLIND OF A POTENTIAL DROP-OFF. SEC 1133B.8.1
5. WHEN A GUARDRAIL OR HANDRAIL IS PROVIDED, NO CURB IS REQUIRED WHEN A GUIDE RAIL IS PROVIDED CENTER 3"±- 1" ABOVE THE SURFACE OF THE WALK OR SIDEWALK, THE WALK IS 5 % OR LESS GRADIENT OR NO ADJACENT HAZARD EXISTS. SEC 1133B.8.1

CALIFORNIA ARCHITECTURAL BARRIER LAWS - TITLE 24

ENTRANCES

1. ALL PRIMARY ENTRANCES TO BUILDING FACILITIES SHALL BE MADE ACCESSIBLE TO THE PHYSICALLY DISABLED. SEC 1133B.1.1.1.1
2. ALL ACCESSIBLE ENTRANCES SHALL BE IDENTIFIED WITH AT LEAST ONE STANDARD SIGN AND WITH ADDITIONAL DIRECTIONAL SIGNS, AS REQUIRED, VISIBLE FROM APPROACHING PEDESTRIAN WAYS.
3. EVERY REQ'D ENTRANCE OR PASSAGE DOORWAY SHALL BE OF A SIZE AS TO PERMIT THE INSTALLATION OF A DOOR NOT LESS THAN 3 FEET IN WIDTH AND NOT LESS THAN 6 FEET, 8 INCHES IN HEIGHT. DOORS SHALL BE CAPABLE OF OPENING OF AT LEAST 90 DEGREES AND SHALL BE SO MOUNTED THAT THE CLEAR WIDTH OF THE DOORWAY IS NOT LESS THAN 32 INCHES. SEC 1133B.2.2
4. WHERE A PAIR OF DOORS IS UTILIZED AT LEAST ONE OF THE DOORS SHALL PROVIDE A CLEAR, UNOBSTRUCTED OPENING WIDTH OF 32-INCHES WITH THE LEAF POSITIONED AT AN ANGLE OF 90 DEGREES FROM ITS CLOSED POSITION. SEC 1133B.2.3.1
5. WHEN AN AUTOMATIC DOOR OPERATOR IS UTILIZED TO OPERATE A PAIR OF DOORS, AT LEAST ONE OF THE DOORS SHALL PROVIDE A CLEAR UNOBSTRUCTED OPENING WIDTH OF 32-INCHES WITH THE DOOR POSITIONED AT AN ANGLE OF 90 DEGREES FROM ITS CLOSED POSITION. SEC 1133B.2.3.2
6. LATCHING AND LOCKING DOORS THAT ARE HAND ACTIVATED AND WHICH ARE IN A PATH OF TRAVEL SHALL BE OPERABLE WITH A SINGLE EFFORT BY LEVER TYPE HARDWARE PANIC BARS, PUSH-PULL ACTIVATING BARS, OR OTHER HARDWARE DESIGNED TO PROVIDE PASSAGE WITHOUT REQUIRING THE ABILITY TO GRASP THE OPENING HARDWARE. LOCKED EXIT DOORS SHALL OPERATE AS ABOVE IN EGRESS DIRECTION. SEC 1133B.2.5.2
7. HAND ACTIVATED DOOR OPENING HARDWARE SHALL BE CENTERED BETWEEN 30 INCHES AND 44 INCHES ABOVE THE FLOOR. SEC 1133B.2.5.2
8. THE FLOOR OR LANDING ON EACH SIDE OF AN ENTRANCE OR PASSAGE DOOR SHALL BE LEVEL AND CLEAR. THE LEVEL AND CLEAR AREA SHALL HAVE A LENGTH IN THE DIRECTION OF DOOR SWING OF AT LEAST 60 INCHES AND THE LENGTH OPPOSITE THE DIRECTION OF DOOR SWING OF 48 INCHES AS MEASURED AT RIGHT ANGLES TO THE PLANE OF THE DOOR IN ITS CLOSED POSITION. SEC 1133B.2.4.2
9. THE WIDTH OF THE LEVEL AND CLEAR AREAS ON THE SIDE TO WHICH THE DOOR SWINGS SHALL EXTEND 24 INCHES PAST THE STRIKE EDGE OF THE DOOR FOR EXTERIOR DOORS AND 18 INCHES PAST THE STRIKE EDGE FOR INTERIOR DOORS. SEC 1133B.2.4.3
10. THE FLOOR OR LANDING SHALL BE NOT MORE THAN 1/2 INCH LOWER THAN THE THRESHOLD OF THE DOORWAY. CHANGE IN LEVEL BETWEEN 1/4 INCH AND 1/2 INCH SHALL BE BEVELED WITH A SLOPE NO GREATER THAN 1:2. SEC 1133B.2.4.1
11. THE BOTTOM 10-INCHES OF ALL DOORS EXCEPT AUTOMATIC AND SLIDING SHALL HAVE A SMOOTH UNINTERRUPTED SURFACE TO ALLOW THE DOOR TO BE OPENED BY A WHEELCHAIR FOOTREST WITHOUT CREATING A TRAP OR HAZARDOUS CONDITION. WHERE NARROW FRAME DOORS ARE USED, A 10-INCH HIGH SMOOTH PANEL SHALL BE INSTALLED ON THE PUSH SIDE OF THE DOOR, WHICH ALLOW THE DOOR TO BE OPENED BY A WHEELCHAIR FOOTREST WITHOUT CREATING A TRAP OR HAZARDOUS CONDITION. SEC 1133B.2.6
12. THE BOTTOM 10-INCHES NARROW FRAME WITH A THE SPACE BETWEEN TWO CONSECUTIVE DOOR OPENINGS IN VESTIBULE, SERVING OTHER THAN A REQUIRED EXIT STAIRWAY SHALL PROVIDE A MINIMUM OF 48 INCHES OF SPACE FROM ANY DOOR OPENING INTO SUCH VESTIBULE WHEN THE DOOR IS POSITIONED AT AN ANGLE OF 90 DEGREES FROM ITS CLOSED POSITION DOORS IN A SERIES SHALL SWING EITHER IN THE SAME DIRECTION OR AWAY FROM ITS SPACE BETWEEN THE DOORS. SEC 1133B.2.4.4
13. WHERE TURNSTILES ARE UTILIZED IN A FACILITY FOR THE PURPOSE OF PROVIDING FULLY CONTROLLED ACCESS, A DOOR OR GATE THAT IS ACCESSIBLE TO THE PHYSICALLY DISABLED, SHALL BE PROVIDED ADJACENT TO OR WITHIN A DISTANCE NOT TO EXCEED 30 FEET FROM EACH TURNSTILE EXIT OR ENTRANCE. SEC 1133B.2.3.4

FLOORS AND LEVELS

1. IN BUILDINGS AND FACILITIES, FLOORS OF A GIVEN STORY SHALL BE A COMMON LEVEL THROUGHOUT, OR SHALL BE CONNECTED BY PEDESTRIAN RAMP, PASSENGER ELEVATORS OR SPECIAL ACCESS LIFTS. SEC 1120B.1
2. GROUND AND FLOOR SURFACES ALONG ACCESSIBLE ROUTES AND IN ACCESSIBLE ROOMS AND SPACES, INCLUDING FLOORS, WALKS, RAMPS, STAIRS AND CURB RAMPS, SHALL BE STABLE, FIRM AND SLIP RESISTANT. SEC 1124B.1

CLEAR FLOOR OR GROUND SPACE FOR WHEELCHAIRS

1. THE MINIMUM, CLEAR FLOOR OR GROUND SPACE REQUIRED TO ACCOMMODATE A SINGLE, STATIONARY WHEELCHAIR AND OCCUPANT IS 30-INCHES X 48-INCHES. THE MINIMUM CLEAR FLOOR OR GROUND SPACE FOR WHEELCHAIRS MAY BE POSITIONED FOR FORWARD OR PARALLEL APPROACH TO AN OBJECT. CLEAR FLOOR OR GROUND SPACE FOR WHEELCHAIRS MAY BE PART OF THE KNEE SPACE REQUIRED UNDER SOME OBJECTS. SEC 1118B.4.1
2. ONE FULL UNOBSTRUCTED SIDE OF THE CLEAR FLOOR OR GROUND SPACE FOR A WHEELCHAIR SHALL ADJOIN OR OVERLAP AN ACCESSIBLE ROUTE OR ADJOIN ANOTHER WHEELCHAIR CLEAR FLOOR SPACE. IF A CLEAR FLOOR SPACE IS LOCATED IN AN ALCOVE OR OTHERWISE CONFINED ON ALL OR A PART OF THREE SIDES, ADDITIONAL MANEUVERING CLEARANCES SHALL BE PROVIDED. SEC 1118B.4.2
3. PROVIDE AN ADDITIONAL 12-INCH WIDTH ON ONE SIDE FOR ALCOVES GREATER THAN 15-INCHES DEEP AND DESIGNED FOR SIDE APPROACH.
4. PROVIDE AN ADDITIONAL 6-INCHES WIDTH ON ONE SIDE FOR ALCOVES GREATER THAN 24-INCHES DEEP AND DESIGNED FOR FRONTAL APPROACH.
5. IF THE CLEAR FLOOR SPACE ONLY ALLOWS FORWARD APPROACH TO AN OBJECT, THE MAXIMUM HIGH FORWARD REACH ALLOWED SHALL BE 48-INCHES. IF THE HIGH FORWARD REACH IS OVER AN OBSTRUCTION, THE HORIZONTAL DIMENSION OF THE OBSTRUCTION SHALL BE LESS THAN 25-INCHES. THE MAXIMUM HIGH FORWARD REACH ALLOWED SHALL BE 44-INCHES WHEN THE HORIZONTAL DIMENSION OF THE OBSTRUCTION IS BETWEEN 20-INCHES AND 25-INCHES. SEC 1118B.5
6. IF THE CLEAR FLOOR SPACE ALLOWS PARALLEL APPROACH BY A PERSON IN A WHEELCHAIR, THE MAXIMUM HIGH SIDE REACH ALLOWED SHALL BE 54-INCHES AND THE LOW SIDE REACH SHALL BE NO LESS THAN 9-INCHES ABOVE THE FLOOR. SIDE REACH IS ALLOWED OVER AN OBSTRUCTION PROVIDED THE HORIZONTAL DIMENSION OF THE OBSTRUCTION DOES NOT EXCEED 24-INCHES. SEC 1118B.6

CURB RAMPS

1. THE SURFACE OF EACH CURB RAMP AND ITS FLARED SIDES SHALL BE STABLE, FIRM AND SLIP-RESISTENT AND SHALL BE OF CONTRASTING FINISH FROM THAT OF THE ADJACENT SIDEWALK. SEC 1127B.5.5
2. ALL CURB RAMPS SHALL HAVE A GROOVED BORDER 12" WIDE AT LEVEL SURFACE OF THE SIDEWALK ALONG THE TOP AND EACH SIDE APPROXIMATELY 3/4" ON CENTER. ALL CURB RAMPS CONSTRUCTED BETWEEN THE FACE OF THE CURB AND THE STREET SHALL HAVE A GROOVED BORDER AT THE LEVEL SURFACE OF THE SIDEWALK. SEC 1127B.5.6
3. A CURB RAMP SHALL HAVE A DETECTABLE WARNING THAT EXTENDS THE FULL WIDTH AND DEPTH OF THE CURB RAMP INSIDE THE GROOVED BORDER WHEN THE RAMP SLOPE IS LESS THAN 1 VERTICAL TO 15 HORIZONTAL. DETECTABLE WARNINGS SHALL CONSIST OF RAISED TRUNCATED DOMES WITH A DIAMETER OF NOMINAL 0.9" AT THE BASE TAPERING TO 0.45" AT THE TOP, A HEIGHT OF NOMINAL 0.2" , AND A CENTER TO CENTER SPACING OF NOMINAL 2.35", IN COMPLIANCE WITH FIGURE 11B-23."NOMINAL", AS USED HERE, SHALL BE IN ACCORDANCE WITH SECTION 12-31-102, STATE REFERENCED STANDARDS CODE. THE DETECTABLE WARNING SHALL CONTRAST VISUALLY WITH ADJOINING SURFACES, EITHER LIGHT ON DARK OR DARK ON LIGHT. THE MATERIAL USED TO PROVIDE CONTRAST SHALL BE AN INTEGRAL PART OF THE WALKING SURFACE. HE DOMES MAY BE CONSTRUCTED IN VARIETY OF METHODS, INCLUDING CAST-IN-PLACE OR STAMPED, OR MAY BE PART OF A PREFABRICATED SURFACE TREATMENT. SEC 1127B.5.7

FIRE PROTECTION

1. PROVIDE FIRE PROTECTION FOR BUILDING UNDER CONSTRUCTION PER REQUIREMENTS OF LOCAL GOVERNING AGENCIES.
2. WHERE REQUIRED BY CODE: CORRIDORS, ELEVATORS, LOBBIES, AND ELECTRICAL ROOMS SHALL BE OF 1 HOUR CONSTRUCTION THROUGHOUT.
3. DOORS OPENING INTO 1 HOUR FIRE-RESISTIVE CORRIDORS SHALL BE PROTECTED WITH SMOKE AND DRAFT STOP, FIRE ASSEMBLIES HAVING A MINIMUM 20 MINUTE RATING WITH SELF-CLOSERS.
4. STAIR ENCLOSURES, WHERE REQUIRED, SHALL BE OF 1 HOUR MINIMUM FIRE-RESISTIVE CONSTRUCTION. ALL DOORS OPENING INTO STAIR ENCLOSURES SHALL BE PROTECTED BY 1 HOUR SELF-CLOSING FIRE ASSEMBLIES.
5. PROVIDE AND INSTALL FIRE DAMPERS WHERE AIR DUCTS PENETRATE FIRE-RATED WALLS OR CEILING WHERE REQUIRED BY CODE OR LOCAL GOVERNING AGENCY.
6. WHERE NON-COMBUSTIBLE CONDUIT, PIPES, OR VENTS PENETRATE ASSEMBLY, PROVIDE AND INSTALL APPROVED FIRE-RATED SEALANT OR MINERAL WOOL FILLER TO DRAFT STOP AND MAINTAIN THE FIRE SAFE INTEGRITY OF THE ASSEMBLY.
7. RETURN AIR PLENUMS BETWEEN FLOOR OR ROOF ASSEMBLIES AND SUSPENDED CEILINGS BELOW SHALL MEET THE FOLLOWING REQUIREMENTS:
   - A. SHALL HAVE NO EXPOSED MATERIALS WITHIN THE PLENUM WITH A FLAME SPREAD RATING MORE THAN 25 OR A SMOKE DEVELOPED RATING MORE THAN 50.
   - B. ALL WIRING IN PLENUMS, OTHER THAN TEFLON (WHERE NOTED), SHALL BE IN NON-COMBUSTIBLE CONDUIT.
   - C. WHERE GYPSUM PRODUCTS ARE EXPOSED WITHIN THE PLENUM, AIR TEMPERATURE SHALL BE RESTRICTED TO A RANGE NOT LESS THAN 50 OR MORE THAN 125 DEGREES FAHRENHEIT AND MOISTURE CONTENT CONTROLLED SO THAT THESE PRODUCTS ARE NOT ADVERSELY AFFECTED.
   - D. ALL EXPOSED COMBUSTIBLE FRAMING MEMBERS AND FINIS SURFACES WITHIN RETURN AIR PLENUMS SHALL BE COVERED WITH A MINIMUM OF 1 LAYER 5/8" TYPE "X" GYPSUM BOARD SECURELY NAILED OR OTHERWISE FASTENED PER APPLICABLE CODE. PROVIDE AND INSTALL ALL FURRING AND BLOCKING AND TAPE JOINTS AS REQUIRED.
   - E. FIRE-RETARDANT WOOD PER BUILDING CODE MAY BE EXPOSED WITHOUT COVER IN RETURN AIR PLENUMS WHEN APPROVED BY BUILDING OFFICIAL.
8. INTERIOR WALL AND CEILING FINISHES SHALL BE OF THE FOLLOWING FLAME SPREAD CLASSIFICATIONS: SEC 803.1

CLASS A: FLAME SPREAD 0-25 — SMOKE-DEVELOPED 0-450
CLASS B: FLAME SPREAD 26-75 — SMOKE-DEVELOPED 0-450
CLASS C: FLAME SPREAD 76-200 — SMOKE-DEVELOPED 0-450

INTERIOR WALL AND CEILING FINISH REQUIREMENTS BY OCCUPANCY[k] : CBC TABLE 803.5

GROUP	SPRINKLERED[l]			NONSPRINKLERED[m]		
	EXIT ENCLOSURES AND EXIT PASSAGEWAYS[a, b]	CORRIDORS	ROOMS AND ENCLOSED SPACES[c]	EXIT ENCLOSURES AND EXIT PASSAGEWAYS[a, b]	CORRIDORS	ROOMS AND ENCLOSED SPACES[c]
A-1 & A-2	B	B	C	A	A[d]	B[c]
A-3[f], A-4, A-5	B	B	C	A	A[d]	C
B, E, M, R-1, R-4	B	C	C	A	B	C
F	C	C	C	B	C	C
H	B	B	C[g]	A	A	B
I-1	B	C	C	A	B	B
I-2, I-2.1	B	B	B[h, i]	A	A	B
I-3	A	A[j]	B	-	-	-
I-4	B	B	B[h, i]	A	A	B
R-2	C	C	C	B	B	C
R-3, R301	C	C	C	C	C	C
S	C	C	C	B	B	C
U	NO RESTRICTIONS			NO RESTRICTIONS		

a. Class C interior finish materials shall be permitted for wainscotting or paneling of not more than 1,000 square feet of applied surface area in the grade lobby where applied directly to noncombustible base or over furring strips applied to a noncombustible base and fire blocked as required by Section 803.4.1.
b. In exit enclosures of buildings less than three stories in height of other than Group I-3, Class B interior finish for nonsprinklered buildings and Class C interior finish for sprinklered buildings shall be permitted.
c. Requirements for rooms and enclosed spaces shall be based upon spaces enclosed by partitions. Where a fire-resistance rating is required for structural elements, the enclosing partitions shall extend from the floor to the ceiling. Partition that do not comply with this shall be considered enclosing spaces and room or spaces on both sides shall be considered one. In determining the applicable requirements for rooms and enclosed spaces, the specific occupancy therefor shall be the governing factor regardless of group classification of the building.
d. Lobby areas in Group A-1, A-2, and A-3 occupancies shall not be less than Class B materials.
e. Class C interior finish materials shall be permitted in places of assembly with an occupant load of 300 persons or less.
f. For places of religious worship, wood used for ornamental purposes, trusses, paneling or channel furnishing shall be permitted.
g. Class B material is required where the building exceeds two stories.
h. Class C interior finish materials shall be permitted in administrative spaces.
i. Class C interior finish materials shall be permitted in rooms with the capacity of four persons or less.
j. Class B materials shall be permitted as wainscotting extending not more tahn 48 inches above the finished floor in corridors.
k. Finish materials as provided for in other sections of this code.
l. Applies when the exit enclosures, exit passageways, corridors or rooms and enclosed spaces are protected by a sprinkler system installed in accordance with Section 903.3.1.1 or 903.1.2.
m. (SFM) Not permitted for group I-3.

9. WHERE REQUIRED OR SPECIFIED, PROVIDE AND INSTALL AN AUTOMATIC FIRE SPRINKLER SYSTEM AND ALARM. SPRINKLER SYSTEM PLANS SHALL BE SUBMITTED TO ARCHITECT AND OWNER FOR REVIEW AND APPROVAL OF SYSTEM LAYOUT AND HEADS PRIOR TO SUBMITTAL TO LOCAL AGENCIES FOR REVIEW AND APPROVAL PRIOR TO INSTALLATION. SEPARATE PLAN CHECK AND PERMITS ARE REQUIRED. ANY CHANGES TO ACCOMMODATE FIELD CONDITIONS SHALL BE RESUBMITTED AT THE CONTRACTORS EXPENSE WITH NO ADDITIONAL CHARGE TO OWNER. WHERE ENUNCIATOR PANELS, ALARMS, ETC., ARE REQUIRED IN AN EXPOSED LOCATION, CONTRACTOR SHALL SUBMIT PROPOSED LOCATIONS AND CABINET/COVER PLATE FINISHES TO ARCHITECT FOR APPROVAL PRIOR TO INSTALLATION. SEC 903.3.1.2
10. PROVIDE PORTABLE FIRE EXTINGUISHERS OF TYPE, QUANTITY AND LOCATION DETERMINED BY FIRE DEPARTMENT INSPECTOR AND/OR OWNER. SEE FLOOR PLAN FOR PROPOSED LOCATIONS. CFC SEC 906 & 1415
11. PROVIDE SMOKE DETECTORS, DUCT DETECTORS, AND OTHER SUCH DETECTION DEVICES AS MAY BE REQUIRED BY CODES AND/OR REQUIRED BY CODES AND/OR GOVERNING AUTHORITIES HAVING JURISDICTION AND OWNER.

STAIRS, EXITS AND OCCUPANT LOADS

1. REQUIRED EXIT DOORS:
   - A. SHALL BE OPENABLE FROM INSIDE WITHOUT USE OF A KEY OR ANY SPECIAL KNOWLEDGE OR EFFORT. (THIS NEED NOT APPLY TO EXTERIOR EXIT DOORS IN GROUP B OCCUPANCY WITH AN ADJACENT DURABLE SIGN IN 1" HIGH LETTERS STATING "THIS DOOR TO REMAIN UNLOCKED DURING BUSINESS HOURS" AND WITH A LOCKING DEVICE READILY DISTINGUISHABLE AS LOCKED). SEC 1008.1.8.3.2 & 1008.1.8
   - B. ALL EXIT DOORS SHALL SWING IN THE DIRECTION OF EXIT TRAVEL WHEN SERVING MORE THAN 50 OCCUPANTS PER BUILDING CODE. SEC 1008.1.2
   - C. DOORS SHALL BE NOT LESS THAN 3'-0" WIDE x 6'-8" HIGH WITH NO SINGLE LEAF EXCEEDING 4'-0" IN WIDTH. SEC 1133B.2.2
   - D. THE FLOOR OR LANDING AT EXIT DOORS SHALL BE LEVEL WITH, OR NOT MORE THAN 1/2" LOWER THAN THE THRESHOLD OF THE DOORWAY. SEC 1133B.2.4.1
2. ILLUMINATED EXIT SIGNS SHALL BE PROVIDED WHERE REQUIRED BY, AND IN ACCORDANCE WITH, APPLICABLE LAWS.
3. ALL REQUIRED EXITS AND ALL BLIND CORRIDOR TURNS SHALL HAVE DIRECTIONAL EXIT SIGNS WITH LETTERS NOT LESS THAN 3/4" WIDE AND 6" HIGH ON CONTRASTING BACKGROUNDS. SEC 1011.5.1
4. EXIT AISLES TO BE PROVIDED AT MINIMUM 44" WIDTH LEADING TO EXITS AND MAINTAINED TO PUBLIC STREET. SEC 1133B.6.2
5. EXIT LIGHTING SHALL BE PROVIDED HAVING AN INTENSITY OF NOT LESS THAN ONE FOOT-CANDLE AT FLOOR LEVEL. SEC 1006.2
6. EXIT SIGN SHALL BE INTERNALLY OR EXTERNALLY ILLUMINATED. WHEN THE FACE OF AN EXIT SIGN IS ILLUMINATED FROM AN EXTERNAL SOURCE, IT SHALL HAVE AN INTENSITY OF NOT LESS THAN 5 FOOT CANDLES (54 (LX) FORM EITHER OF TWO ELECTRIC LAMPS. INTERNALLY ILLUMINATED SIGNS SHALL PROVIDE EQUIVALENT LUMINANCE AND BE LISTED FOR THE PURPOSE. SEC 1011.4 & 1011.5
7. EXIT SIGN SHALL ALSO BE CONNECTED TO AN EMERGENCY ELECTRICAL SYSTEM PROVIDED FROM STORAGE BATTERIES, UNIT EQUIPMENT OR AN ON-SITE GENERATOR SET, AND THE SYSTEM SHALL BE INSTALLED IN ACCORDANCE WITH THE ELECTRICAL CODE. SEC 1011.5.3
8. THE POWER SUPPLY FOR MEANS OF EGRESS ILLUMINATION SHALL NORMALLY BE PROVIDED BY THE PREMISES OF ELECTRICAL SUPPLY. IN THE EVENT OF ITS FAILURE, ILLUMINATOR SHALL BE AUTOMATICALLY PROVIDED FROM AN EMERGENCY SYSTEM FOR GROUP I, DIVISIONS 1.1 AND 1.2 OCCUPANCIES AND FOR ALL OTHER OCCUPANCIES WHERE THE MEANS OF EGRESS SYSTEM SERVES AN OCCUPANT LOAD 0F 100 OR MORE. SEC 1006.3
9. EXITS AND EXIT ACCESS DOORS SHALL BE MARKED BY AN APPROVED EXIT SIGN READILY VISIBLE FROM ANY DIRECTION OF EGRESS TRAVEL. ACCESS TO EXITS SHALL BE MARKED BY READILY VISIBLE EXIT SIGNS IN CASES WHERE THE EXIT PATH OF EGRESS TRAVEL IS NOT IMMEDIATELY VISIBLE TO THE OCCUPANTS. EXITS SIGNS PLACEMENT SHALL BE SUCH THAT NO POINT IN THE CORRIDOR IS MORE THAN 100 FEET (30480 mm) OR LISTED VIEWING DISTANCE FOR THE SIGN, WHICHEVER IS LESS, FROM THE NEAREST VISIBLE EXIT SIGN. SEC 1011.1

INSULATION NOTES

1. INSULATION TO BE FULL THICK R-11 FIBERGLASS BATTS AT ALL STUD WALLS WHERE INDICATED ON PLANS TO 6" ABOVE FINISH CEILING & R-13 AT ALL WALLS ADJACENT TO CONC. WALLS.
2. ALL ROOF INSULATION SHALL BE R-19 AND RATED AT A MAX. FLAME SPREAD RATING OF 25 WITH A MAX. SMOKE DEVELOPED RATING OF 450.
3. ALL INSULATION TO BE UNFACED FIBER-GLASS BATTS., U.N.O.

MECHANICAL, PLUMBING & ELECTRICAL

1. ELECTRICAL, PLUMBING AND AIR CONDITIONING CONTRACTORS SHALL SUBMIT PLANS TO THE BUILDING DEPARTMENT FOR APPROVAL AND OBTAIN PERMIT PRIOR TO ANY JOB SITE INSTALLATION.
2. PROVIDE AND LOCATE, AFTER APPROVAL BY ARCHITECT AND OWNER, ACCESS DOORS OR PANELS IN CEIL'G. AND WALL CONSTRUCTION AS REQ'D. BY INSTALLATION OF MECHANICAL, FIRE SPRINKLER, PLUMBING AND ELECTRICAL WORK
3. CONTRACTOR SHALL VERIFY SIZE AND LOCATIONS OF ALL MECHANICAL EQUIPMENT PLATFORMS AND BASES AS WELL AS POWER AND WATER OF DRAIN INSTALLATIONS WITH EQUIPMENT MANUFACTURERS PRIOR TO PROCEEDING WITH THE WORK. CHANGES TO ACCOMMODATE FIELD CONDITIONS OR CONTRACTORS SUBSTITUTIONS SHALL BE MADE WITHOUT ADDITIONAL CHARGES TO OWNER.
4. SMOKE & FIRE DAMPERS MUST BE INSTALLED IN THE FOLLOWING LOCATIONS PER SECTION 716.
   - a. DUCT PENETRATIONS OF AREA OR OCCUPANCY SEPARATION WALLS WITH RATING OF TWO HOURS OR LESS.
   - b. DUCTS PASSING THROUGH HORIZONTAL EXIT WALLS.
   - c. DUCT PENETRATING SHAFTS.
   - d. DUCTS PENETRATING FIRE-RESISTIVE ELEMENTS OF FIRE RATED CORRIDOR WALLS. SEE EXCEPTION FOR STEEL DUCTS WITH NO OPENINGS INTO CORRIDOR.

PARTITIONS

1. ALL STUDS AT NONBEARING INTERIOR PARTITIONS SHALL BE 362 S 125 - 18 (STEEL 3 " WIDE x 25 GAUGE) UNLESS NOTED OTHERWISE. (LARR #25529)
2. PROVIDE AND INSTALL HEAVIER GAUGE STUDS, STIFFENER, BRACING BACK-UP PLATES, ETC., AS REQ'D. AT STUD WALLS FOR SUPPORT OF OTHER EQUIPMENT.
3. SEE WALL LEGEND OR CALL-OUTS ON PLAN FOR GYP. BD. THICKNESS, FIRE RATING, AND INSULATION AS REQ'D.
4. REINFORCING AT ALL CORNERS, EXPOSED ENDS AND ENDS OF GYP. BD. ADJACENT TO ALL METAL, WOOD OR CONC. TO BE GALVANIZED STEEL " USG DUR-A-BEAD " OR EQUAL GYPSUM BOARD SHALL BE SMOOTH FINISH AT ALL WALLS TO RECEIVE PAINT, UNLESS NOTED OTHERWISE.
5. PARTITIONS:
   - A. ALL METAL STUDS SHALL BE "WESTERN METAL" OR APPROVED EQUAL. (LARR #25529)
   - B. THE BRIDGING, BLOCKING OR END BEARING STIFFENERS SHALL BE AS REQUIRED BY THE MANUFACTURER UNLESS NOTED OTHERWISE.
   - C. ALL STUDS SHALL CONFORM TO I.C.B.O. ER-4943P AND CITY OF LOS ANGELES, (LARR #25529)
   - D. USE THE FOLLOWING GUIDELINE FOR STUD SIZE AND SPACING OF NONBEARING INTERIOR PARTITIONS, (GYP. BD. FINISH ON BOTH SIDES), UNLESS NOTED OTHERWISE.

	MAX. PARTITION HT.		MAX. PARTITION HT.	
SIZE	SPACING	HEIGHT	SPACING	HEIGHT
362 S 125 - 18 (3 5/8" x 25 GA.)	16"	15'-4"	24"	13'-9"
362 S 125 - 33 (3 5/8" x 20 GA.)	16"	20'-8"	24"	18'-6"
600 S 125 - 33 (6" x 20 GA.)	16"	30'-10"	24"	27'-2"

6. CEILING JOISTS:
   - A. ALL METAL STUDS SHALL BE "WESTERN METAL" OR APPROVED EQUAL.
   - B. ALL STUDS SHALL CONFORM TO I.C.B.O. ER-4943P AND CITY OF LOS ANGELES, (LARR #25529)
   - C. STUD TRACKS SHALL BE UNPUNCHED STUDS OF SAME GA. AS STUD UNLESS NOTED OTHERWISE.

	MAX. SPAN		MAX. SPAN	
SIZE	SPACING		SPACING	
362 S 125 - 18 (3 5/8" x 25 GA.)	16"	8'-9"	24"	7'-9"
362 S 125 - 33 (3 5/8" x 20 GA.)	16"	10'-7"	24"	9'-5"

SECURITY NOTES

1. LOCKS SHALL BE KEY OPERATED FROM THE OUTSIDE AND OPERATED FROM THE INSIDE BY A DEVICE NOT PROHIBITED BY CHAPTER 10 OF THE U.B.C.
2. DEAD BOLTS SHALL CONTAIN HARDENED INSERT OR EQUIVALENT.
3. STRAIGHT DEAD BOLTS SHALL HAVE A MIN. THROW OF 1" W/ A 5/8" MIN. EMBEDMENT.
4. HOOK OR EXPANDING LUG DEAD BOLTS SHALL HAVE A MIN. THROW OF 3/4".
5. BOLTS OF LOCKS WHICH AUTOMATICALLY ACTIVATE 2 OR MORE DEAD BOLTS SHALL EMBED 1/2" MIN.

SUSPENDED CEILING SYSTEMS (LARR #22069)

1. ALL HANGER WIRES SHALL BE #12 GALV. WIRE AT 4'-0" O.C. EACH DIRECTION (EXCEPT AT LIGHT FIXTURES).
2. LATERAL SUPPORT SHALL BE PROVIDED BY FOUR WIRES OF MINIMUM #12 GAUGE SPLAYED IN FOUR DIRECTIONS 90 DEGREES APART AND CONNECTED TO THE MAIN RUNNER WITHIN 2" OF CROSS RUNNER AND TO STRUCTURE ABOVE AT AN ANGLE NOT EXCEEDING 45 DEGREES FROM THE PLANE OF THE CEILING. THESE LATERAL SUPPORT POINTS SHALL BE PLACED 12'-0" O.C. IN EACH DIRECTION WITH THE FIRST POINT WITHIN 4'-0" OF EACH WALL. VERTICAL STRUTS SHALL BE PROVIDED FROM THE STRUCTURE ABOVE TO THE MAIN RUNNERS AT ALL LATERAL SUPPORTS POINTS. STRUTS SHALL HAVE THE CAPACITY TO RESIST THE VERTICAL COMPONENTS INDUCED BY BRACING WIRES. PLACE STRUTS AT 12'-0" O.C. IN EACH DIRECTION WITH A STRUT POINT WITHIN 6'-0" OF EACH WALL.
3. ALLOWANCE SHALL BE MADE FOR LATERAL MOVEMENT SYSTEM. MAIN RUNNERS AND CROSS RUNNERS SHALL BE ATTACHED AT TWO ADJACENT WALLS WITHIN CLEARANCE BETWEEN THE WALL AND THE RUNNERS MAINTAINED AT THE OTHER TWO WALLS.
4. LIGHTING FIXTURES AND AIR DIFFUSERS SHALL BE SUPPORTED DIRECTLY BY WIRES TO THE STRUCTURE ABOVE, EXCEPT FOR THE FOLLOWING CONDITIONS:
   - A. RECESSED LIGHTING FIXTURES NOT OVER 36 POUNDS IN WEIGHT AND PENDENT HUNG FIXTURES NOT OVER 20 POUNDS IN WEIGHT, MAY BE SUSPENDED AND ATTACHED DIRECTLY TO THE CEILING SYSTEM RUNNERS BY A POSITIVE ATTACHMENT SUCH AS SCREWS OR BOLTS.
   - B. AIR DIFFUSERS WHICH WEIGH NOT MORE THAN 20 POUNDS AND WHICH RECEIVE NO TRIBUTARY LOADING FROM DUCT WORK MAY BE POSITIVELY ATTACHED TO AND SUPPORTED BY THE CEILING RUNNERS.

GENERAL NOTES -

1. THE INTENT OF THESE DRAWINGS AND SPECIFICATIONS IS TO INCLUDE ALL LABOR, MATERIALS AND SERVICES NECESSARY FOR COMPLETION OF ALL WORK SHOWN, PRESCRIBED, OR REASONABLY IMPLIED BUT NOT LIMITED TO THAT EXPLICITLY INDICATED IN THE CONTRACT DOCUMENTS. ANY WORK OR MATERIALS NOT DIRECTLY NOTED IN THE CONTRACT DOCUMENTS, BUT NECESSARY FOR THE PROPER EXECUTION AND COMPLETION OF THE INTENT THEREOF ARE IMPLIED AND ARE TO BE PROVIDED FOR AS IF SPECIFICALLY DESCRIBED.
2. ALL WORK SHALL CONFORM TO 2007 CALIFORNIA BUILDING CODE REQUIREMENTS AND ALL APPLICABLE CODES, ORDINANCES, AND REGULATIONS AS ADOPTED BY LOCAL AUTHORITIES HAVING JURISDICTION.
3. DIMENSIONS ON DRAWINGS ARE SHOWN TO CENTER LINE OF COLUMNS AND TO FACE OF CONCRETE AND STUD WALLS UNLESS NOTED OTHERWISE.
4. NUMERICAL DIMENSIONS SHALL TAKE PRIORITY OVER SCALED DRAWINGS. DO NOT SCALE DRAWINGS.
5. WHERE APPLICABLE STRUCTURAL, MECHANICAL, ELECTRICAL, PLUMBING, CIVIL AND LANDSCAPE DRAWINGS ARE SUPPLEMENTAL TO THE ARCHITECTURAL DRAWINGS. THE CONTRACTOR SHALL REVIEW ALL PLANS AND DRAWINGS. IN THE EVENT OF CONFLICTING STATEMENTS, INSUFFICIENT INFORMATION OR ERRORS, THE CONT'R. SHALL IMMEDIATELY NOTIFY THE ARCHITECT AND OBTAIN CLARIFICATION BEFORE ANY WORK IS BEGUN. WORK INSTALLED WHERE CONFLICTING CONDITIONS EXIST SHALL BE CORRECTED AT CONTRACTORS EXPENSE.
6. DIMENSIONS, DETAILS, NOTES AND/OR SYMBOLS THAT APPLY TO ONE UNIT, APPLY TO ALL UNITS IN LIKE SITUATIONS UNLESS NOTED OTHERWISE.
7. DETAILS NOTED AS TYPICAL SHALL APPLY IN ALL LIKE CONDITIONS UNLESS SPECIFICALLY SHOWN OR NOTED OTHERWISE WHERE NO SPECIFIC DETAIL IS SHOWN, THE FRAMING OR CONSTRUCTION SHALL BE IDENTICAL OR SIMILAR TO THAT INDICATED FOR LIKE CASES OF CONSTRUCTION OF THIS PROJECT.
8. WHENEVER AN ARTICLE, DEVICE OR PIECE OF EQUIPMENT IS SHOWN, INDICATED, OR REFERRED TO ON THE DRAWINGS OR THESE NOTES IN THE SINGULAR NUMBER, SUCH REFERENCES APPLY TO AS MANY SUCH ARTICLES AS ARE REQUIRED TO COMPLETE THE INSTALLATION.
9. THE GENERAL CONTRACTOR AND ALL SUBCONTRACTORS SHALL VERIFY DIMENSIONS AND CONDITIONS ON THE JOB SITE PRIOR TO BEGINNING CONSTRUCTION AND SHALL REPORT ANY DISCREPANCIES OR UNIDENTIFIED CONDITIONS TO THE ARCHITECT FOR RESOLUTION BEFORE ANY WORK IS BEGUN.
10. THE CONTRACTOR SHALL BE RESPONSIBLE FOR MEANS, METHODS, TECHNIQUES AND PROCEDURES EMPLOYED IN THE PERFORMANCE OF WORK IN, ON OR ABOUT THE JOB SITE THE CONTRACTOR SHALL COORDINATE AND VERIFY ALL WORK PERFORMED BY SUB-CONTRACTORS.
11. ALL CONTRACTORS AND SUBCONTRACTORS PERFORMING WORK ON OR RELATED TO THIS PROJECT SHALL CONDUCT THEIR OPERATIONS SO THAT ALL EMPLOYEES ARE PROVIDED A SAFE PLACE TO WORK AND THE PUBLIC IS PROTECTED, AND SHALL COMPLY WITH THE "OCCUPATIONS, SAFETY AND HEALTH REGULATION" OF THE U.S. DEPARTMENT OF LABOR AND WITH ANY AND ALL OTHER APPLICABLE STATE AND/OR LOCAL SAFETY REGULATIONS. THE CONTRACTOR AGREES TO ASSUME SOLE AND COMPLETE RESPONSIBILITY FOR JOB SITE SAFETY CONDITIONS DURING THE COURSE OF CONSTRUCTION OF THIS PROJECT. THIS REQUIREMENT SHALL APPLY CONTINUOUSLY AND NOT BE LIMITED TO NORMAL WORKING HOURS AND THE CONTRACTOR SHALL DEFEND, INDEMNIFY AND HOLD HARMLESS THE OWNER AND ARCHITECT FROM ANY AND ALL LIABILITY, REAL OR ALLEGED, IN CONNECTION WITH PERFORMANCE OF WORK ON THIS PROJECT.
12. THE STRUCTURE IS DESIGNED AS A STABLE UNIT AFTER ALL COMPONENTS ARE IN PLACE. THE CONTRACTOR SHALL PROVIDE ALL SHORING AND BRACING NECESSARY TO ENSURE THE STABILITY OF ANY AND ALL PARTS OF THE BUILDING DURING CONSTRUCTION.
13. UNLESS SPECIFICALLY SHOWN OR NOTED ON THE DRAWINGS, NO STRUCTURAL MEMBER SHALL BE CUT, NOTCHED, BORED, OR OTHERWISE MODIFIED WITHOUT PERMISSION OF THE STRUCTURAL ENGINEER.
14. WHETHER OR NOT DETAILED ON DRAWINGS, THE CONTRACTOR SHALL PROVIDE AND INSTALL ALL STIFFENERS, BRACING, BACK-UP PLATES AND SUPPORTING BRACKETS REQUIRED FOR THE INSTALLATION OF ALL CASEWORK AND ALL WALL MOUNTED OR SUSPENDED MECHANICAL, ELECTRICAL OR MISCELLANEOUS EQUIPMENT INCLUDING PLYWOOD BACKBOARDS FOR TELEPHONE AND ELECTRICAL EQUIPMENT ROOMS.
15. THE CONTRACTOR SHALL BE RESPONSIBLE FOR OBTAINING APPROVAL AND PERMITS FOR ALL DESIGN/BUILD SYSTEMS. HE SHALL ALSO BE RESPONSIBLE THAT THE SYSTEMS MEET ALL APPLICABLE CODE REQUIREMENTS.
16. ANY MODIFICATIONS TO THE BUILDING SHELL RESULTING FROM DESIGN/BUILD REQUIREMENTS SHALL BE REPORTED TO THE OWNER AND ARCHITECT ALONG WITH ANY REQUIRED COSTS OR SAVINGS PRIOR TO CONSTRUCTION. ANY MODIFICATIONS NOT REPORTED WILL BE THE CONTRACTORS RESPONSIBILITY COORDINATION, CODE CONFORMANCE AND COSTS.
17. SHOP DRAWINGS SHALL BE SUBMITTED BY THE CONTRACTOR FOR APPROVAL AS NECESSARY. NEITHER THE ARCHITECT'S REVIEW NOR APPROVAL OF SHOP DRAWINGS SHALL RELIEVE THE GENERAL CONTRACTOR FROM RESPONSIBILITY FOR DEVIATIONS FROM THE DRAWINGS OR SPECIFICATIONS UNLESS HE HAS CALLED THE ARCHITECTS ATTENTION (IN WRITING) TO SUCH DEVIATIONS AT THE TIME OF SUBMISSION NOR SHALL IT RELIEVE HIM OF RESPONSIBILITY FOR ERRORS OF ANY SORT IN THE SHOP DRAWINGS.
18. INSTALLATION OF GLASS SHALL CONFORM TO FEDERAL SPECIFICATION 16-CFR-1202 AND ALL LOCAL CODES AND ORDINANCES. GLASS SUBJECT TO HUMAN IMPACT SHALL COMPLY WITH U.S. CONSUMER PRODUCT SAFETY STANDARDS. CERTIFICATE SHALL ACCOMPANY PRODUCT STATING DATE AND PLACE OF MANUFACTURE.
19. ALL MATERIALS AND FINISHES INDICATED ON PLANS SHALL BE NEW AND UNUSED, UNLESS NOTED OTHERWISE.
20. THE BUILDING AND FACILITIES MUST BE ACCESSIBLE TO AND FUNCTION FOR THE PHYSICALLY HANDICAPPED PER C.A.C. TITLE 24 HANDICAPPED ACCESS REGULATIONS, AND THE APPLICABLE PORTIONS OF THE AMERICAN'S WITH DISABILITIES ACT.
21. ALL MATTERS OF COLOR, TEXTURE, DESIGN AND INTERPRETATION OF PLANS SHALL BE REFERRED BY THE CONTRACTOR TO " WITHEE MALCOLM ARCHITECTS ".
22. THE CONTRACTOR SHALL COORDINATE WORK PERFORMED BY OTHER CONTRACTORS. DISCREPANCIES, IF ANY, SHOULD BE BROUGHT TO THE ATTENTION OF " WITHEE MALCOLM ARCHITECTS " FOR RESOLUTION BEFORE PROCEEDING WITH WORK.
23. PRIOR TO COMMENCEMENT OF WORK THE CONTRACTOR SHALL VERIFY WITH TENANT THE LOCATIONS OF ALL ELECTRICAL AND PLUMBING OUTLETS, AND ANY OTHER FEATURES UNIQUE TO THIS PROJECT. THE CONTRACTOR IS ADVISED TO MEET WITH THE TENANT OR HIS AGENT(S) ON THE JOB SITE TO ACCOMPLISH THE ABOVE VERIFICATION.
24. THE CONTRACTOR SHALL PERFORM ANY AND ALL CUTTING, PATCHING, REPAIRING AND RESTORING NECESSARY TO COMPLETE THE WORK AND TO RESTORE ANY DAMAGED OF AFFECTED SURFACES RESULTING FROM THE WORK OF THIS CONTRACT TO THEIR ORIGINAL CONDITION TO THE SATISFACTION OF THE ARCHITECT AND THE OWNER.
25. THE CONTRACTOR SHALL BE RESPONSIBLE FOR OBTAINING, MOUNTING, AND DISPLAYING ARCHITECT'S JOB SIGN. CONTRACTOR SHALL ALSO RETURN JOB SIGN TO ARCHITECT AT COMPLETION OF PROJECT IN GOOD CONDITION.

DOOR NOTES

1. SEE PLAN AND/OR SCHEDULE FOR FIRE RATING OF DOORS AS REQUIRED.
2. CARPENTER TO UNDERCUT ALL OFFICE DOORS AS REQUIRED WHERE CARPET OCCURS.
3. INTERIOR DOOR FRAMES SHALL MATCH EXISTING AND BE FINISHED PER DOOR & FINISH SCHEDULES.

all ideas, designs and plans represented by this drawing are the exclusive property of the withee malcolm partnership, architects, and shall not be reproduced in whole or in part without the express prior written permission of said architects, any unauthorized reuse of these plans other than for the project and location shown is prohibited.

job no.	A9041.109-P
drawn	
submittal	
Plan Check Submittal	03.27.2012
Plan Check Re-Submittal	10.29.2012
Issue For Bid	10.29.2012
revision	

Tenant Improvements / Accessibility Upgrades for :
CITY OF TORRANCE
PERSONNEL BUILDING
3231 Torrance Boulevard, Torrance, CA 90503

OWNER : City of Torrance, Department of General Services
3350 Civic Center Drive, Torrance, CA 90503

WITHEE MALCOLM ARCHITECTS, LLP
2251 W. 190th Street
Torrance, Ca 90504
t. 310.217.8885
f. 310.217.0425

sheet title **general notes**

sheet **CS-02**

BID SET ONLY

SANITARY FACILITY FIXTURES AND ACCESSORIES

1. THE HEIGHT OF ACCESSIBLE WATER CLOSETS SHALL BE A MINIMUM OF 17" AND A MAXIMUM OF 19" MEASURED TO THE TOP OF A MAXIMUM 2" HIGH TOILET SEAT, EXCEPT THAT 3" SEATS SHALL BE PERMITTED ONLY IN ALTERATIONS WHERE THE EXISTING FIXTURE IS LESS THAN 15" HIGH. SEC 1115B.4.1.4

2. A CLEAR FLOOR SPACE 30" BY 48" SHALL BE PROVIDED IN FRONT OF A LAVATORY TO ALLOW A FORWARD APPROACH. SUCH CLEAR FLOOR SPACE SHALL ADJOIN OR OVERLAP AN ACCESSIBLE ROUTE AND SHALL EXTEND TO KNEE AND TOE SPACE UNDERNEATH THE LAVATORY. A DOOR SWING SHALL NOT ENCROACH INTO THIS CLEAR SPACE. SEC 1115B.4.3.3

3. LAVATORIES, WHEN LOCATED ADJACENT TO A SIDE WALL OR PARTITION, SHALL BE A MINIMUM DISTANCE OF 18" TO THE CENTERLINE OF THE FIXTURE. SEC 1115B.4.3.2

4. LAVATORIES THAT ARE DESIGNATED TO BE ACCESSIBLE SHALL BE MOUNTED WITH THE RIM OR COUNTER EDGE NO HIGHER THAN 34" ABOVE THE FINISHED APRON OR OUTSIDE BOTTOM EDGE OF THE LAVATORY OF 29". REDUCING TO 27" AT A POINT LOCATED 8" BACK FROM THE FRONT EDGE. KNEE CLEARANCE BELOW THE LAVATORY SHALL EXTEND A MINIMUM OF 30" IN WIDTH BY 17" IN DEPTH. TOE CLEARANCE SHALL BE THE SAME WIDTH AND SHALL BE A MINIMUM OF 9" HIGH FROM THE FLOOR AND A MINIMUM OF 11" DEEP FROM THE FRONT OF THE LAVATORY. SEC 1115B.4.3.2

5. HOT WATER AND DRAINPIPES UNDER ACCESSIBLE LAVATORIES SHALL BE INSULATED OR OTHERWISE COVERED. THERE SHALL BE NO SHARP OR ABRASIVE SURFACES UNDER LAVATORIES. SEC 1115B.4.3.4

6. FAUCET CONTROLS AND OPERATING MECHANISMS ETC. SHALL BE OPERABLE HAND AND SHALL NOT REQUIRE TIGHT GRASPING, PINCHING, OR TWISTING OF THE WRIST. THE FORCE REQUIRED TO ACTIVATE CONTROLS SHALL BE NO GREATER THAN 5LBF. LEVER- OPERATED, PUSH-TYPE, ELECTRONIC OR AUTOMATIC FLUSHING CONTROL TYPES ARE ACCEPTABLE AND PREFERRED. SELF- CLOSING VALVES ARE ALLOWED IF THE FAUCET REMAINS OPEN FOR AT LEAST 10 SECONDS. SEC 1115B.4.3.1

7. WHERE URINALS ARE PROVIDED, AT LEAST ONE SHALL HAVE A CLEAR FLOOR SPACE 30" BY 48" IN FRONT OF THE URINAL TO ALLOW FORWARD APPROACH. SEC 1115B.4.2.3

8. URINALS SHALL BE FLOOR MOUNTED OR WALL HUNG. WHERE ONE OR MORE WALL HUNG URINALS ARE PROVIDED, AT LEAST ONE WITH A RIM PROJECTING A MINIMUM OF 14" FROM THE WALL AND AT A MAXIMUM 17" ABOVE THE FLOOR SHALL BE PROVIDED. SEC 1115B.4.2.1

9. CONTROLS FOR WATER CLOSET FLUSH VALVES SHALL BE MOUNTED ON THE WIDE SIDE OF THE TOILET AREAS. SEC 1115B.4.1.5

10. WATER CLOSET AND URINAL FLUSH VALVE CONTROLS, AND FAUCET AND OPERATING MECHANISM CONTROLS SHALL BE OPERABLE WITH ONE HAND, SHALL NOT REQUIRE TIGHT GRASPING, PINCHING, OR TWISTING OF THE WRIST, AND SHALL BE MOUNTED NO MORE THAN 44" ABOVE THE FLOOR. SEC 1115B.4.1.5 & 1115B.4.2.2

11. THE FORCE REQUIRED TO ACTIVATE WATER CLOSET AND URINAL FLUSH VALVE CONTROLS, AND FAUCET AND OPERABLE MECHANISM CONTROLS, SHALL BE NO GREATER THAN 5LBF. SEC 1115B.4.1.5 & 1115B.4.2.2

12. SELF-CLOSING FAUCET CONTROL VALVES ARE ALLOWED IF THE FAUCET REMAINS OPEN FOR AT LEAST 10 SECONDS. SEC 1115B.4.3.1

13. ALL MIRRORS LOCATED ABOVE ACCESSIBLE LAVATORIES OR COUNTERTOPS SHALL BE MOUNTED WITH THE BOTTOM EDGE OF THE REFLECTING SURFACE 40 INCHES MAXIMUM ABOVE THE FINISH FLOOR OR GROUND. SEC 1115B.8.1.1

14. WHERE TOWEL, SANITARY NAPKINS, WASTE RECEPTACLES, DISPENSERS, OTHER EQUIPMENT AND CONTROLS ARE PROVIDED AT LEAST ONE OF EACH TYPE SHALL BE LOCATED ON AN ACCESSIBLE ROUTE, WITH THE HIGHEST OPERABLE PARTS, INCLUDING COIN SLOTS, WITHIN 40 INCHES FROM THE FINISHED FLOOR AND SHALL COMPLY WITH SECTION 1117B.6, CONTROLS AND OPERATING MECHANISMS. SEC 1115B.8.3

15. TOILET TISSUE DISPENSERS SHALL BE LOCATED ON THE WALL WITHIN 12" OF THE FRONT EDGE OF THE TOILET SEAT AND NO LOWER THAN 19" FROM THE FLOOR. DISPENSERS THAT CONTROL DELIVERY OR THAT DO NOT PERMIT CONTINUOUS PAPER FLOW SHALL NOT BE USED. SEC 1115B.8.4

16. TOILET ROOM FLOORS SHALL HAVE A SMOOTH, HARD, NON- ABSORBENT SURFACE SUCH AS PORTLAND CEMENT, CONCRETE, CERAMIC TILE, OR OTHER APPROVED MATERIAL WHICH EXTENDS UPWARD ONTO THE WALLS AT LEAST 5". WALLS WITHIN WATER CLOSET COMPARTMENTS AND WALLS WITHIN 24" OF THE FRONT AND SIDES OF URINALS SHALL BE SIMILARLY FINISHED TO A HEIGHT OF 48" AND, EXCEPT FOR STRUCTURAL ELEMENTS, THE MATERIALS USED ON SUCH WALLS SHALL BE A TYPE WHICH IS NOT ADVERSELY AFFECTED BY MOISTURE. SEC 1115B.3.1.6

SANITARY FACILITIES (GENERAL)

1. SANITARY FACILITIES THAT SERVE BUILDINGS, FACILITIES OR PORTIONS OF BUILDINGS OR FACILITIES SHALL BE PROVIDED TO BE ACCESSIBLE TO PERSONS WITH DISABILITIES ARE REQUIRED TO BE ACCESSIBLE. SEC 1115B.1

2. DOORWAYS LEADING INTO MEN'S SANITARY FACILITIES SHALL BE IDENTIFIED BY AN EQUILATERAL TRIANGLE 1/4" THICK WITH EDGES 12" LONG AND A VERTEX POINTING UPWARD. WOMEN'S SANITARY FACILITIES SHALL BE IDENTIFIED BY A CIRCLE 1/4" THICK AND 12" IN DIAMETER. SEC 1115B.6

3. UNISEX SANITARY FACILITIES SHALL BE IDENTIFIED BY A CIRCLE 1/4" THICK, 12" IN DIAMETER, WITH A 1/4" THICK TRIANGLE SUPERIMPOSED ON THE CIRCLE AND WITHIN THE 12" DIAMETER. SEC 1115B.6

4. GEOMETRIC (CIRCLE & TRIANGLE) SYMBOLS ON SANITARY FACILITY DOORS SHALL BE CENTERED ON THE DOOR AT A HEIGHT OF 60" AND THEIR COLOR AND CONTRAST SHALL BE DISTINCTLY DIFFERENT FROM THE COLOR AND THE CONTRAST OF THE DOOR. SEC 1115B.6

5. REFER TO THE ARCHITECTURAL DRAWINGS FOR PHYSICAL REQUIREMENTS PERTAINING TO THE HANDICAPPED ACCESS TO TOILET ROOMS.

MULTIPLE ACCOMMODATION SANITARY FACILITIES

MULTIPLE ACCOMMODATION SANITARY FACILITY IS DEFINED AS " A ROOM THAT HAS MORE THAN ONE SANITARY FIXTURE, IS INTENDED FOR THE USE OF MORE THAN ONE PERSON AT A TIME, AND WHICH USUALLY IS PROVIDED WITH PRIVACY COMPARTMENTS OR SCREENS SHIELDING SOME FIXTURES FROM VIEW. A BATHROOM SERVING A HOTEL GUEST ROOM AND A PRIVATE TOILET IN SMALL OFFICES, STORES AND SIMILAR LOCATION ARE NOT INCLUDED IN THIS CATEGORY ".
CBC PG. 38

1. A CLEAR SPACE MEASURED FROM THE FLOOR TO A HEIGHT OF 27" ABOVE THE FLOOR, WITHIN THE SANITARY FACILITY ROOM, OR SUFFICIENT SIZE TO INSCRIBE A CIRCLE WITH A DIAMETER NOT LESS THAN 60", OR A CLEAR SPACE 36" BY 63" IN SIZE SHALL BE PROVIDED FOR WHEELCHAIR MANEUVERING. DOORS SHALL NOT SWING INTO THE FLOOR SPACE REQUIRED FOR ANY FIXTURE. DOORS, OTHER THAN THE DOOR TO THE ACCESSIBLE TOILET COMPARTMENT, IN ANY POSITION MAY ENCROACH INTO THIS SPACE BY NOT MORE THAN 12". SEC 1115B.3.1.1

2. A WATER CLOSET FIXTURE LOCATED IN A COMPARTMENT SHALL PROVIDE A MINIMUM 28" WIDE CLEAR SPACE FROM A FIXTURE OR A MINIMUM 32" WIDE CLEAR SPACE FROM A WALL AT ONE SIDE OF THE WATER CLOSET. THE OTHER SIDE OF THE WATER CLOSET SHALL PROVIDE 18" FROM THE CENTERLINE OF THE WATER CLOSET TO THE WALL. GRAB BARS SHALL NOT PROJECT MORE THAN 3" INTO THESE CLEAR SPACES. SEC 1115B.4.1.1

3. A MINIMUM OF 48" LONG CLEAR SPACE SHALL BE PROVIDED IN FRONT OF THE WATER CLOSET IF THE COMPARTMENT HAS AN END OPENING DOOR AND A MINIMUM 60" LONG CLEAR SPACE SHALL BE PROVIDED IN FRONT OF THE WATER CLOSET IF THE COMPARTMENT HAS A DOOR LOCATED AT THE SIDE. GRAB BARS SHALL NOT PROJECT MORE THAN 3" INTO THESE CLEAR SPACES. SEC 1115B.3.1.4.2 & 1115B.3.1.4.3

4. WATER CLOSET COMPARTMENT SHALL BE EQUIPPED WITH A DOOR THAT HAS AN AUTOMATIC-CLOSING DEVICE, AND SHALL HAVE A CLEAR, UNOBSTRUCTED OPENING WIDTH OF 32" WHEN LOCATED AT THE END AND 34" WHEN LOCATED AT THE SIDE WITH THE DOOR POSITIONED AT AN ANGLE OF 90 DEGREES FROM ITS CLOSED POSITION. SEC 1115B.3.1.4.4

5. WHEN STANDARD COMPARTMENT DOORS ARE USED, WITH A MINIMUM 9" CLEARANCE FOR FOOTRESTS UNDERNEATH AND A SELF-CLOSING DEVICE, CLEARANCE AT THE STRIKE EDGE, AS SPECIFIED IN SECTION 1004.9.2.2 IS NOT REQUIRED. 1111B.3.1.4.4

6. THE INSIDE AND OUTSIDE OF THE COMPARTMENT DOOR SHALL BE EQUIPPED WITH A LOOP OR U-SHAPED HANDLE IMMEDIATELY BELOW THE LATCH. THE LATCH SHALL BE FLIP-OVER STYLE, SLIDING OR OTHER HARDWARE NOT REQUIRING THE USER TO GRASP OR TWIST. SEC 1115B.3.1.4.5

7. EXCEPT FOR DOOR OPENING WIDTHS AND DOOR SWINGS, A CLEAR UNOBSTRUCTED ACCESS NOT LESS THAN 44" SHALL BE PROVIDED TO WATER CLOSET COMPARTMENTS DESIGNED FOR USE BY PERSONS WITH DISABILITIES AND THE SPACE IMMEDIATELY IN FRONT OF A WATER CLOSET COMPARTMENT SHALL NOT BE LESS THAN 48" AS MEASURED AT RIGHT ANGLES TO COMPARTMENT DOOR IN ITS CLOSED POSITION. SEC 1115B.3.1.4.5

8. WHERE SIX OR MORE STALLS ARE PROVIDED WITHIN A MULTIPLE ACCOMMODATION TOILET ROOM, IN ADDITION TO THE STANDARD ACCESSIBLE STALL REQUIRED ABOVE, AT LEAST ONE ADDITIONAL STALL SHALL BE 36" WIDE WITH AN OUTWARD SWINGING SELF-CLOSING DOOR AND PARALLEL GRAB BARS COMPLYING WITH SECTIONS 1115B.8.4. SEC 1115B.3.1.5

GRAB BARS

1. GRAB BARS TO BE LOCATED ON EACH SIDE OR ON ONE SIDE AND BACK OF WATER CLOSET. SEC 1115B.4.1.3

A. GRAB BARS TO BE 33" ABOVE AND PARALLEL TO THE FLOOR. SEC 1115B.4.1.3.1 & 1115B.4.1.3.2.

B. SIDE GRAB BARS TO BE MIN. 42" LONG AND PROJECT 24" IN FRONT OF WATER CLOSET STOOL. GRAB BAR BAR AT BACK TO BE 36" LONG. SEC 1115B.4.1.3.1 & 1115B.4.1.3.2.

C. THE DIAMETER OR WIDTH OF THE GRIPPING SURFACES OF A GRAB BAR SHALL BE 1 1/4" TO 1 1/2" OR THE SHAPE SHALL PROVIDE AN EQUIVALENT GRIPPING SURFACE. IF GRAB BARS ARE MOUNTED ADJACENT TO A WALL THE SPACE BETWEEN THE WALL AND THE GRAB BAR SHALL BE 1 1/2". SEC 1115B.7.1

D. THE STRUCTURAL STRENGTH OF THE GRAB BARS, TUB, AND SHOWER SEATS, FASTENERS, AND MOUNTING DEVICES SHALL MEET THE FOLLOWING SPECIFICATIONS: SEC 1115B.7.2

1. BENDING STRESS IN A GRAB BAR OR SEAT INDUCED BY THE MAXIMUM BENDING MOMENT FROM THE APPLICATION OF A 250 LB POINT LOAD SHALL BE LESS THAN THE ALLOWABLE STRESS FOR THE MATERIAL OF THE GRAB BAR OR SEAT. SEC 1115B.7.2.1

2. SHEAR STRESS INDUCED IN A GRAB BAR OR SEAT BY THE APPLICATION OF A 250 LB POINT LOAD SHALL BE LESS THAN THE ALLOWABLE SHEAR STRESS FOR THE MATERIAL OF THE GRAB BAR OR SEAT AND ITS MOUNTING BRACKET OR OTHER SUPPORT IS CONSIDERED TO BE FULLY RESTRAINED, THEN DIRECT AND TORSIONAL SHEAR STRESSES SHALL NOT EXCEED THE ALLOWABLE SHEAR STRESS. SEC 1115B.7.2.2

3. SHEAR FORCE INDUCED IN FASTENER OR MOUNTING DEVICES FROM THE APPLICATION OF A 250 LB POINT LOAD SHALL BE LESS THAN THE ALLOCABLE LATERAL LOAD OF EITHER THE FASTENER OR MOUNTING DEVICE OR THE SUPPORTING STRUCTURE, WHICHEVER HAS THE SMALLER ALLOWABLE LOAD. SEC 1115B.7.2.3

4. TENSILE FORCE INDUCED IN A FASTENER BY A DIRECT FORCE OF A 250 LB POINT LOAD , PLUS THE MAXIMUM MOMENT FROM THE APPLICATION OF A 250 LB LOAD, SHALL BE LESS THAN THE ALLOWABLE WITHDRAWAL LOAD BETWEEN THE FASTENER AND THE SUPPORTING STRUCTURE. SEC 1115B.7.2.4

5. GRAB BARS SHALL NOT ROTATE WITHIN THEIR FITTINGS. SEC 1115B.7.2.5

E. A GRAB BAR AND ANY WALL OR OTHER SURFACES ADJACENT TO IT SHALL BE FREE OF ANY SHARP OR ABRASIVE ELEMENTS. EDGES SHALL HAVE A MINIMUM RADIUS OF 1/8". SEC 1115B.7.3

DOORS AND HARDWARE:

1. HAND ACTIVATED DOOR OPENING HARDWARE TO BE MOUNTED 30" TO 44" ABOVE THE FLOOR. LATCHING AND LOCKING DOORS TO BE OPERABLE WITH A SINGLE EFFORT BY LEVER OR PUSH-PULL TYPE HARDWARE. SEC 1133B.2.5.2

2. THE BOTTOM 10" OF ALL DOORS (EXCEPT SLIDING AUTOMATIC) SHALL HAVE A SMOOTH UNINTERRUPTED SURFACE FOR OPENING BY WHEELCHAIR FOOT REST. SEC 1133B.2.6

3. THE MAXIMUM FORCE REQUIRED TO PUSH OR PULL OPEN A DOOR SHALL COMPLY WITH THIS SECTION. PUSH OR PULL FORCE FOR A HINGED DOOR SHALL BE MEASURED PERPENDICULAR TO THE DOOR FACE AT THE DOOR OPENING HARDWARE OR 30 INCHES FROM THE HINGED SIDE, WHICHEVER IS FARTHER FROM THE HINGE.

   1. REQUIRED FIRE DOORS SHALL HAVE THE MINIMUM OPENING FORCE ALLOWABLE BY THE ADMINISTRATIVE AUTHORITY NOT TO EXCEED 15 lbf.

   2. OTHER THAN FIRE DOORS, INTERIOR DOORS SHALL HAVE A MAXIMUM OPENING FORCE OF 5 lbf.

   3. OTHER THAN REQUIRED FIRE DOORS, EXTERIOR DOORS SHALL HAVE A MAXIMUM OPENING FORCE OF 5 lbf. SEC 1133B.2.5

4. ALL REQUIRED EXIT DOORWAYS SHALL HAVE A MINIMUM 32" WIDE BY 80" HIGH CLEAR OPENING WITH THE DOOR AT 90 DEGREES TO THE CLOSED POSITION. SEC 1133B.2.2

5. ONE DOOR OF A PAIR OF DOORS SHALL MEET THE MINIMUM WIDTH REQUIREMENTS. SEC 1133B.2.3.1

6. THE FLOOR OR LANDING SHALL NOT BE MORE THEN 1/2 INCH LOWER THAN THE THRESHOLD OF THE DOORWAY. CHANGE IN LEVEL BETWEEN 1/4 AND 1/2 INCH SHALL BE BEVELED WITH A SLOPE NO GREATER THAN ONE UNIT VERTICAL IN 2 UNITS HORIZONTAL (50-PERCENT SLOPE). CHANGE IN LEVEL GREATER THAN 1/2 INCH SHALL BE ACCOMPLISHED BY MEANS OF A RAMP. SEC 1133B.2.4.1

DRINKING FOUNTAINS

1. IN NEW CONSTRUCTION, WHERE ONLY ONE DRINKING FOUNTAIN AREA IS PROVIDED ON A FLOOR, THERE SHALL BE A DRINKING FOUNTAIN WHICH IS ACCESSIBLE TO INDIVIDUALS WHO USE WHEELCHAIRS IN ACCORDANCE WITH PLUMBING CODE 5-1501.0 AND ONE ACCESSIBLE TO THOSE WHO HAVE DIFFICULTY BENDING OR STOOPING. THIS CAN BE ACCOMMODATED BY THE USE OF A HI-LOW FOUNTAIN OR BY SUCH OTHER MEANS AS WOULD ACHIEVE THE REQUIRED ACCESIBILITY FOR EACH GROUP ON EACH FLOOR. SEC 1115B.4.6.1

2. WHERE WATER FOUNTAINS ARE PROVIDED, THEY SHALL COMPLY WITH DISABLED ACCESS REQUIREMENTS. SEC 1115B.4.6

3. DRINKING FOUNTAINS SHALL BE LOCATED COMPLETELY WITHIN ALCOVES OR OTHERWISE POSITIONED SO AS NOT TO ENCROACH INTO PEDESTRIAN WAYS. THE ALCOVES IN WHICH THE WATER FOUNTAIN IS LOCATED SHALL NOT BE LESS THAN 32" IN WIDTH AND 18" IN DEPTH. SEC 1115B.4.6.3

4. THE DRINKING FOUNTAIN SHALL BE A MINIMUM OF 18 INCHES IN DEPTH AND THERE SHALL BE CLEAR AND UNOBSTRUCTED KNEE SPACE UNDER THE DRINKING FOUNTAIN NOT LESS THAN 27-INCHES IN HEIGHT AND 8 INCHES IN DEPTH, THE DEPTH MEASUREMENT BEING TAKEN FROM THE FRONT EDGE OF THE FOUNTAIN. SEC 1115B.4.6.2

5. THE BUBBLER OUTLET ORIFICE SHALL BE LOCATED WITHIN 6" OF THE FRONT EDGE OF THE DRINKING FOUNTAIN AND WITHIN 36" OF THE FLOOR. THE WATER STREAM FROM THE BUBBLER SHALL BE SUBSTANTIALLY PARALLEL TO THE FRONT EDGE OF THE DRINKING FOUNTAIN. SEC 1115B.4.6.4

6. THERE SHALL BE TOE CLEARANCE OF 9" IN HEIGHT ABOVE THE FLOOR AND 17" IN DEPTH FROM THE FRONT EDGE OF THE FOUNTAIN. SEC 1115B.4.6.2

7. A SIDE APPROACH DRINKING FOUNTAIN IS NOT ACCEPTABLE. SEC 1115B.4.6.2

8. THE DRINKING FOUNTAIN BUBBLER SHALL BE ACTIVATED BY A MANUALLY OPERATED SYSTEM NOT REQUIRING A FORCE GREATER THAN 5 LBF., THAT IS LOCATED WITHIN 6" OF THE FRONT EDGE OF THE FOUNTAIN OR AN ELECTRICALLY CONTROLLED DEVICE (PREFERABLY). SEC 1115B.4.6.4

CONTROLS AND OPERATING MECHANISMS

1. CONTROLS AND OPERATING MECHANISMS REQUIRED TO BE ACCESSIBLE BY SECTION 1129.1 SHALL COMPLY WITH THE REQUIREMENTS OF SECTION 1117B.6. SEC 1117B.6.1

2. CLEAR FLOOR SPACE COMPLYING WITH SECTION 1118B.4 THAT ALLOWS A FORWARD OR PARALLEL APPROACH BY A PERSON USING A WHEELCHAIR SHALL BE PROVIDED AT CONTROLS, DISPENSERS, RECEPTACLES, AND OTHER OPERABLE EQUIPMENT. SEC 1117B.6.2

3. THE HIGHEST OPERABLE PART OF ALL CONTROLS, DISPENSERS, RECEPTACLES, AND OTHER OPERABLE EQUIPMENT SHALL BE PLACED WITHIN 48" OF THE FLOOR BUT NOT LOWER THAN 9" IF SIDE APPROACHED. SEC 1117B.6.3

4. CONTROLS AND OPERATING MECHANISMS SHALL BE OPERABLE WITH ONE HAND AND SHALL NOT REQUIRE TIGHT GRASPING, PINCHING, OR TWISTING OF THE WRIST. THE FORCE REQUIRED ACTIVATE CONTROLS SHALL BE NO GRATER THAN 5 POUNDS OF FORCE. SEC 1117B.6.4

5. NON-COMMERCIAL KITCHEN AND COUNTER BAR SINKS LOCATED IN COMMON USE AREAS SHALL HAVE FAUCET CONTROLS AND OPERATING MECHANISMS OPERABLE WITH ONE HAND IN ACCORDANCE WITH SECTION 1118B AND SHALL NOT REQUIRE GRASPING ,PINCHING TWISTING OF THE WRIST. THE FORCE REQUIRED TO ACTIVATE CONTROLS SHALL BE NO GREATER THAN 5 PLF. LEVER-OPERATED, PUSH-TYPE, AND ELECTRONICALLY CONTROLLED MECHANISMS ARE EXAMPLES OF ACCEPTABLE DESIGNS. SELF-CLOSING VALVES ARE ALLOWED IF THE FAUCET REMAINS OPEN FOR AT LEAST 10 SECONDS. SEC 1508.2

6. SPACES FOR VENDING MACHINES AND OTHER EQUIPMENT SHALL COMPLY WITH SECTION 1118B AND SHALL BE LOCATED ON AN ACCESSIBLE ROUTE COMPLYING WITH SECTION 1114B.1.2 CONTROLS FOR VENDING MACHINES AND OTHER EQUIPMENT SHALL COMPLY WITH SECTION 1117B.6, CONTROLS AND OPERATING MECHANISMS. SEC 1126B

ELECTRICAL REQUIREMENTS:

1. THE CENTER OF JUNCTION BOXES FOR RECEPTACLE OUTLETS SHALL BE INSTALLED AT AN ACCESSIBLE LOCATION MEETING THE CLEARANCES AND REACH RANGE REQUIREMENTS OF SEC 1117B.6.3

2. THE CENTER OF THE GRIP OF THE OPERATING HANDLE OF SWITCHES INTENDED TO BE USED BY THE OCCUPANT OF THE ROOM OR AREA TO CONTROL LIGHTING AND RECEPTACLE OUTLETS, APPLIANCES, OR COOLING, HEATING AND VENTILATING EQUIPMENT, SHALL BE 48 INCHES ABOVE THE FLOOR OR WORKING PLATFORM. SEC 1117B.6.5.1

3. THE CENTER OF FIRE ALARM INITIATING DEVICES (BOXES) SHALL BE LOCATED 48" ABOVE THE LEVEL OF THE FLOOR, WORKING PLATFORM, GROUND SURFACE, OR SIDEWALK.

4. THE INSTALLATION OF FIRE ALARM EQUIPMENT AND SYSTEM IN ANY OCCUPANCY WITHIN THE SCOPE OF THESE REGULATIONS SHALL BE IN ACCORDANCE WITH THE PROVISIONS OF THE CALIFORNIA ELECTRICAL CODE.

5. IF EMERGENCY WARNING SYSTEMS ARE REQUIRED THEY SHALL ACTIVATE A MEANS OF WARNING THE HEARING IMPAIRED. FLASHING VISUAL WARNING SHALL HAVE A FREQUENCY OF NOT MORE THAN 60 FLASHES PER MINUTE.

job no.	A9041109-P
drawn	
submittal	
Plan Check Submittal	03.27.2012
Plan Check Re-Submittal	10.29.2012
Issue For Bid	10.29.2012
revision	

all ideas, designs and plans represented by this drawing are the exclusive property of the withee malcolm partnership, architects, and shall not be reproduced in whole or in part without the express prior written permission of said architects, any unauthorized reuse of these plans other than for the project and location shown is prohibited.

Tenant Improvements / Accessibility Upgrades for :
CITY OF TORRANCE
PERSONNEL BUILDING
3231 Torrance Boulevard, Torrance, CA 90503

OWNER : City of Torrance, Department of General Services
3350 Civic Center Drive, Torrance, CA 90503

WITHEE MALCOLM
ARCHITECTS, LLP

2251 W. 190th Street
Torrance, Ca 90504
t. 310.217.8885
f. 310.217.0425

sheet title **general notes**

sheet **CS-03**

BID SET ONLY

keynotes

17 EXTENT OF DEMO TO NEAREST SCORE LINE.
18 EXISTING PLUMBING ACCESS BOX TO BE RELOCATED -SEE SITE PLAN.
19 EXISTING ROOF OVERFLOW DOWNSPOUT TO BE RELOCATED -SEE SITE PLAN
20 EXISTING CONCRETE SEAT WALL.

1 EXISTING CONCRETE CURB TO REMAIN.
2 REMOVE EXISTING A.C. PAVING, PARKING STRIPING, WHEEL STOP AND CURB RAMP ON THIS AREA.
3 EXISTING LANDSCAPING TO REMAIN.
4 EXISTING A.C. PAVING TO REMAIN.
5 EXISTING CONCRETE WALK TO REMAIN.
6 REMOVE PORTION OF EXISTING CONCRETE WALK FOR NEW CURB RAMP. SEE SITE PLAN.
7 REMOVE EXISTING CURB RAMP FOR NEW CURB RAMP. SEE FLOOR PLAN & SITE PLAN.
8 REMOVE EXISTING LANDSCAPE AREA. SEE SITE PLAN.
9 REMOVE EXISTING BENCH.
10 EXISTING PLANTER TO REMAIN.
11 EXISTING CONCRETE STEPS AND HANDRAILS TO REMAIN.
12 EXISTING CONCRETE GUTTER TO REMAIN.
13 EXISTING ACCESSIBLE SITE SIGNAGE TO REMAIN.
14 SAWCUT & REMOVE EXISTING CONCRETE SLAB. PREP TO RECEIVE NEW CONC. FLOOR SLAB.
15 BLACK OUT EXISTING PARKING STRIPING. SEE SITE PLAN FOR NEW STRIPING.
16 SAWCUT & REMOVE EXISTING CONCRETE WALK. PREP TO RECEIVE NEW WALK

demolition site plan notes

1. PROTECT ALL EXISTING AREAS, MATERIALS & CONDITIONS TO REMAIN FROM EROSION, DEBRIS, OR DAMAGE.
2. SEE STRUCTURAL, MECHANICAL, AND ELECTRICAL DRAWINGS FOR ADDITIONAL SITE INFORMATION.
3. SAVE ALL LIGHTS, UTILITY BOXES, COVERS, VENTS, ETC. FOR REUSE. RETURN UNUSED ITEMS TO OWNER FOR DISPOSITION.
4. WHERE EXISTING CONDITIONS (CURBS, A.C. PAVING, FENCING, LANDSCAPING, UTILITIES, ETC.) ARE DAMAGED DUE TO DEMOLITION OR NEW CONSTRUCTION, THAT AREA SHALL BE REPAIRED TO MATCH EXISTING.
5. CONTRACTOR SHALL PROVIDE SITE RECORD DOCUMENTS (MECH., ELEC., FIRE) TO OWNER AT JOB COMPLETION & PRIOR TO APPLICATION FOR PAYMENT. DOCUMENTS SHALL REFLECT ACCURATE LOCATIONS AND DEPTHS FOR ALL UNDERGROUND UTILITIES.
6. WHERE UTILITIES, SIGNS, ETC. ARE REUSED, THEY ARE TO BE CLEANED, REPAIRED/REPLACED AS NECESSARY TO APPEAR AS EXISTING. REUSED LIGHT FIXTURES AND POLES ARE TO BE CLEANED AND REPAIRED TO APPEAR AS EXISTING WITH NEW BULBS IN ALL REUSED FIXTURES.
7. SEE ADDITIONAL DEMOLITION NOTES ON SHEET A2-01.

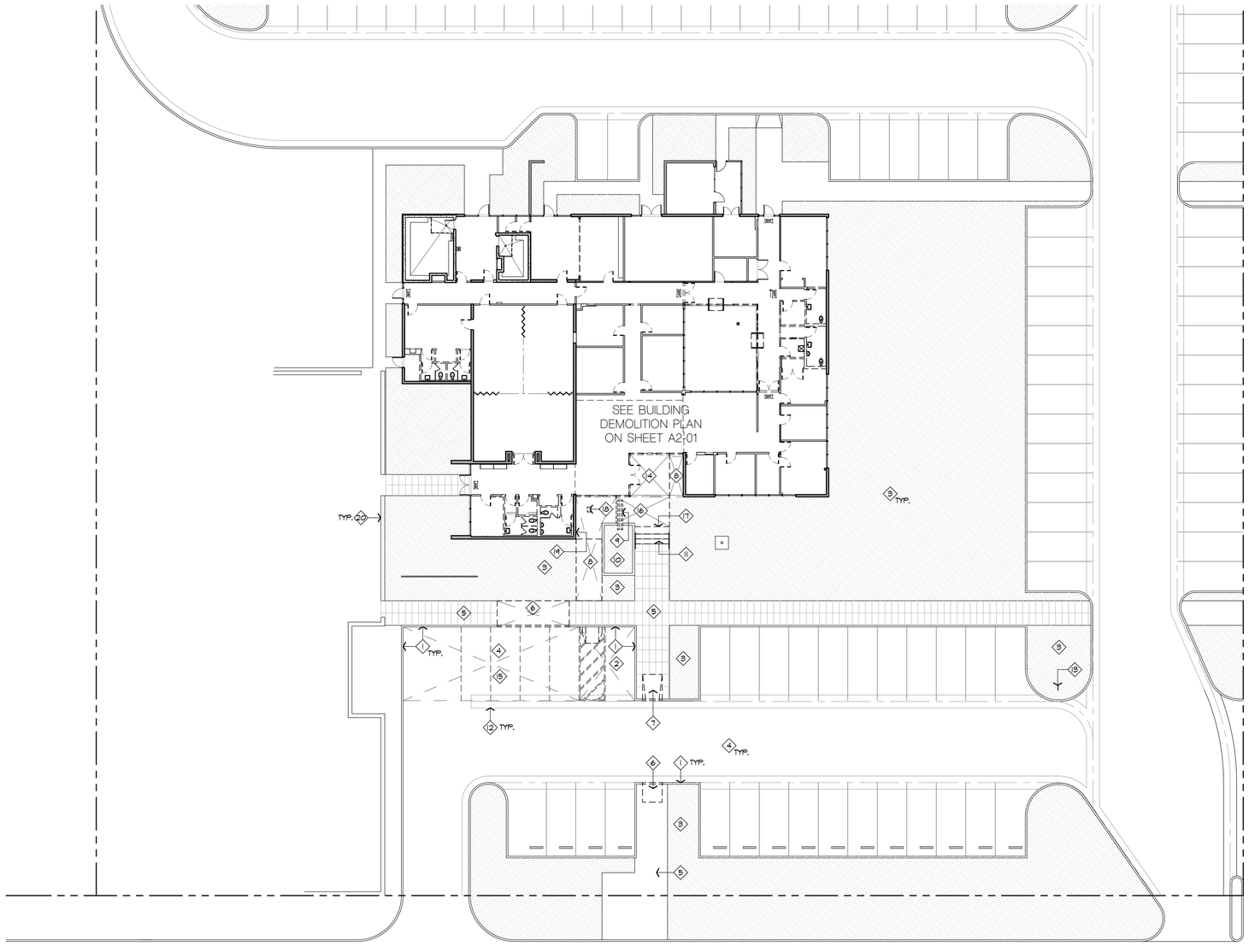

demolition site plan
SCALE: 1/16"=1'-0"

1

note:
ALL CONDITIONS INDICATED ARE EXISTING UNLESS NOTED OTHERWISE.

scale: 1/16" = 1'-0"
0 16 32 48 64

NORTH

job no.	A9041109-P
drawn	
submittal	
Plan Check Submittal	03.27.2012
Plan Check Re-Submittal	10.29.2012
Issue For Bid	10.29.2012
revision	

all ideas, designs and plans represented by this drawing are the exclusive property of the withee malcolm partnership, architects, and shall not be reproduced in whole or in part without the express prior written permission of said architects, any unauthorized reuse of these plans other than for the project and location shown is prohibited.

Tenant Improvements / Accessibility Upgrades for :
CITY OF TORRANCE
PERSONNEL BUILDING
3231 Torrance Boulevard, Torrance, CA 90503

OWNER : City of Torrance, Department of General Services
3350 Civic Center Drive, Torrance, CA 90503

WITHEE MALCOLM
ARCHITECTS, LLP

2251 W. 190th Street
Torrance, Ca 90504
t. 310.217.8885
f. 310.217.0425

sheet title **demolition site plan**

sheet **A1-01**

BID SET ONLY

keynotes

19. RELOCATED PLUMBING ACCESS BOX TO BE FLUSH WITH TOP OF NEW CONCRETE WALK. EXACT LOCATION TO BE VERIFIED IN FIELD.
20. RELOCATED ROOF OVERFLOW DOWNSPOUT. EXACT LOCATION TO BE VERIFIED IN FIELD.
21. EXISTING CONCRETE SEAT WALL .
22. NEW ACCESSIBLE CONC. LEVEL LANDING (MAX. SLOPE 1/4"/FT. AND MAX. 1/4"/FT. CROSS SLOPE.

1. EXISTING CONCRETE CURB TO REMAIN.
2. EXISTING PARKING STRIPING TO REMAIN.
3. EXISTING LANDSCAPING TO REMAIN.
4. EXISTING A.C. PAVING TO REMAIN..
5. EXISTING CONCRETE WALK TO REMAIN.
6. EXISTING MASONRY LOW WALL TO REMAIN.
7. EXISTING PLANTER TO REMAIN.
8. PROVIDE NEW ACCESSIBLE CONCRETE WALK (MAX. SLOPE 1:20 AND MAX. 1/4" PER FOOT CROSS SLOPE). MATCH LEVELS WITH EXISTING ADJACENT CMC. WALKS.
9. NEW CURB RAMP. SEE DETAIL 8/A6-01.
10. PATCH AND REPAIR EXISTING PLANTER WHERE DEMOLITION OCCURRED.
11. EXISTING SIGNAGE.
12. CONTRACTOR TO VERIFY (AND EXTEND AS NECESSARY) EXISTING IRRIGATION UNDER NEW CONCRETE WALK.
13. EXISTING CONCRETE STEPS AND HANDRAILS TO REMAIN.
14. EXISTING CONCRETE WHEEL STOP.
15. PROVIDE NEW A.C. PAVING ON THIS AREA, WITH 2% MAX. SLOPE IN ANY DIRECTION AT ACCESSIBLE STALLS AND AISLES.
16. PATCH & REPAIR EXISTING CONC. SLAB & PLANTER WHERE BENCH WAS REMOVED.
17. NEW PARKING STRIPING BY CITY OF TORRANCE STANDARDS. SEE DETAIL 2/A6-01.
18. EXTENT OF NEW CONCRETE TO NEAREST SCORE LINE.

site plan notes

1. PROTECT ALL EXISTING AREAS, MATERIALS & CONDITIONS TO REMAIN FROM EROSION, DEBRIS, OR DAMAGE.
2. SAVE ALL LIGHTS, UTILITY BOXES, COVERS, VENTS, ETC. FOR REUSE. RETURN UNUSED ITEMS TO OWNER FOR DISPOSITION.
3. WHERE EXISTING CONDITIONS (CURBS, A.C. PAVING, FENCING, LANDSCAPING, UTILITIES, ETC.) ARE DAMAGED DUE TO DEMOLITION OR NEW CONSTRUCTION, THAT AREA SHALL BE REPAIRED TO MATCH EXISTING.
4. CONTRACTOR SHALL PROVIDE SITE RECORD DOCUMENTS (MECH., ELEC., FIRE AND ANY OTHER IDENTIFIABLE UTILITY) TO OWNER AT JOB COMPLETION & PRIOR TO APPLICATION FOR PAYMENT. DOCUMENTS SHALL REFLECT ACCURATE LOCATIONS AND DEPTHS FOR ALL UNDERGROUND UTILITIES.
5. WHERE UTILITIES, SIGNS, ETC. ARE REUSED, THEY ARE TO BE CLEANED, REPAIRED/REPLACED AS NECESSARY TO APPEAR AS EXISTING. REUSED LIGHT FIXTURES AND POLES ARE TO BE CLEANED AND REPAIRED TO APPEAR AS EXISTING WITH NEW BULBS IN ALL REUSED FIXTURES.
6. CONTRACTOR SHALL BE RESPONSIBLE FOR REPAIRING (OR REPLACING, IF MORE ECONOMICAL) ANY IRRIGATION, UNDERGROUND CONDUIT, SEWER, DOMESTIC WATER, ETC. THAT IS DAMAGED OR REQUIRED TO BE MODIFIED AS A PART OF CONSTRUCTION. THE CONTRACTOR SHALL SURVEY THE EXISTING SITE FOR ANY POTENTIAL CONFLICTS.
7. PATCH & REPAIR ASPHALT WHERE CONCRETE WHEEL STOPS HAVE BEEN REMOVED.

4 / S — INDICATES QUANTITY OF PARKING SPACES
'S' INDICATES A STANDARD PARKING SPACE (8'-6" X 19'-0" MIN.)
'A' INDICATES AN ACCESSIBLE PARKING SPACE (9'-0" X 18'-0" MIN.)
'V' INDICATES A VAN ACCESSIBLE PARKING SPACE (9'-0" X 18'-0" MIN.)

INDICATES ACCESSIBLE PATH OF TRAVEL

demolition site plan
SCALE: 1/16"=1'-0"

1

note:
ALL CONDITIONS INDICATED ARE EXISTING UNLESS NOTED OTHERWISE.

scale: 1/16" = 1'-0"
0 16 32 48 64

NORTH

job no.	A9041109-P
drawn	
submittal	
Plan Check Submittal	03.27.2012
Plan Check Re-Submittal	10.29.2012
Issue For Bid	10.29.2012
revision	

all ideas, designs and plans represented by this drawing are the exclusive property of the withee malcolm partnership, architects, and shall not be reproduced in whole or in part without the express prior written permission of said architects, any unauthorized reuse of these plans other than for the project and location shown is prohibited.

Tenant Improvements / Accessibility Upgrades for :
CITY OF TORRANCE
PERSONNEL BUILDING
3231 Torrance Boulevard, Torrance, CA 90503

OWNER : City of Torrance, Department of General Services
3350 Civic Center Drive, Torrance, CA 90503

WITHEE MALCOLM ARCHITECTS, LLP
2251 W. 190th Street
Torrance, Ca 90504
t. 310.217.8885
f. 310.217.0425

sheet title **site plan**

sheet **A1-02**

BID SET ONLY

keynotes

- 19 EXISTING AREA DRAIN TO REMAIN
- 1 22 REMOVE EXISTING A.C. TILE CEILING, SUSPENDED CEILING FRAMING & LIGHT FIXTURES THROUGHOUT OFFICE AREA U.N.O..
- 21 REMOVE EXISTING DRINKING FOUNTAIN.
- 22 EXISTING WOOD PANELING AT WALLS TO REMAIN IN THIS AREA, TYP.
- 23 REMOVE ALL EXISTING INTERIOR WOOD DOORS & HARDWARE, EXISTING FRAME TO REMAIN -THROUGHOUT OFFICE BUILDING, U.N.O. SEE PLAN.
- 24 EXISTING GYP.BD. SOFFIT TO REMAIN
- 25 EXISTING EXTERIOR PLASTER CEILING IS TO REMAIN IN THIS AREA. SEE CEILING PLAN.
- 1 EXISTING EXTERIOR MASONRY WALLS TO REMAIN.
- 2 EXISTING EXTERIOR GLAZING TO REMAIN.
- 3 EXISTING DOOR, FRAME AND HARDWARE TO REMAIN.
- 4 EXISTING ROOF HATCH ABOVE TO REMAIN.
- 5 EXISTING FINISHES ARE TO REMAIN AT THIS AREA/ROOM, U.N.O. PROTECT FROM DAMAGE.
- 6 REMOVE EXISTING DOOR, FRAME AND HARDWARE. SAVE FOR REUSE WHERE EVER POSSIBLE, TYP. (N.I.C.)
- 7 EXISTING PAINTED WOOD FRAMED ENCLOSURE AND WOOD BENCH TO BE REMOVED.
- 8 REMOVE ALL PLUMBING FIXTURES, FLOOR / WALL/CEILING FINISHES, LIGHT FIXTURES, AND ACCESSORIES THROUGHOUT THIS EXISTING RESTROOM.
- 9 EXISTING COUNTER/CABINET TO BE REMOVED.
- 10 REMOVE EXISTING STOREFRONT GLAZING SYSTEM AND STOREFRONT DOORS.
- 11 REMOVE EXISTING FLOOR/WALL/CEILING FINISHES, SUSP. CEILING ASSEMBLY, MILLWORK, LIGHT FIXTURES, ETC. THROUGHOUT THIS AREA.
- 12 REMOVE PORTION OF EXISTING WALL FOR NEW DOOR OPENING.
- 13 REMOVE EXISTING ELECTRICAL PANEL AND SAVE FOR RELOCATION. SEE ELECTRICAL PLANS.
- 14 EXISTING SHELVING TO REMAIN
- 15 REMOVE EXISTING WALL MOUNTED LIGHT FIXTURE, CONDUITS, ETC. THROUGHOUT THIS WALL.
- 16 REMOVE EXISTING EXTERIOR PLASTER SOFFIT/CEILING AS REQUIRED TO ACCOMMODATE INSTALLATION OF NEW CEILING. SEE CEILING PLAN
- 17 MODIFY EXISTING DOOR TO ACCOMMODATE LOUVER AT BOTTOM. PAINT LOUVER TO MATCH DOOR FRAME AND DOOR TO MATCH EXISTING. REPLACE DOOR IF MORE ECONOMICAL.
- 18 POCHE INDICATES TO REMOVE PORTION OF (E) PAVEMENT AS REQUIRED TO PROVIDE FOR NEW TRENCE DRAIN, SEE FLOOR PLAN.

demolition notes

1. REMOVE ALL EXISTING INTERIOR WOOD DOOR & HARDWARE, EXISTING FRAME TO REMAIN -THROUGHOUT OFFICE BUILDING, U.N.O. SEE PLAN.
2. REMOVE ALL EXISTING FLOOR COVERING (CARPET, VCT, SHEET VINYL, & RELATED BASE) THROUGHOUT OFFICE BUILDING, U.N.O. SEE PLAN.
3. (1) REMOVE EXISTING A.C. TILE CEILING, SUSPENDED CEILING FRAMING & LIGHT FIXTURES THROUGHOUT OFFICE AREA U.N.O. SEE PLAN.
4. WHERE EXISTING WALLS, CEILINGS, ETC. ARE DAMAGED DUE TO DEMOLITION OR NEW CONSTRUCTION, THAT AREA SHALL BE REPAIRED TO MATCH EXISTING.
5. REMOVE ALL UNUSED OR ABANDONED DATA, ELECTRICAL OUTLETS, CONDUITS, J-BOXES, PANELS, & SWITCHES IN AREAS AFFECTED BY DEMOLITION OR NEW CONSTRUCTION. PRESERVE ITEMS WHICH WILL REMAIN IN SERVICE. SEE ELECTRICAL PLANS.
6. REMOVE ANY NON ACCESSIBLE DOOR HARDWARE AND REPLACE. WITH LEVER TYPE WITHIN THE AREA OF WORK.
7. REMOVE ANY UNNECESSARY THERMOSTATS AND PATCH WALLS. RELOCATE AS NECESSARY WITHIN THE AREA OF WORK.. SEE MECHANICAL PLANS.
8. REMOVE ANY UNNECESSARY OR ABANDONED DUCTWORK WITHIN THE AFFECTED PORTIONS OF NEW CONSTRUCTION. PATCH WALLS. SEE MECHANICAL PLANS.
9. ALL FIRE EXTINGUISHERS AND FIRE EXTINGUISHER CABINETS WILL REMAIN.
10. THE CONTRACTOR SHALL BE RESPONSIBLE FOR VISITING THE JOBSITE AND BEING AWARE OF ALL ITEMS TO BE DEMOLISHED AND REMOVED INCLUDING, BUT NOT LIMITED TO PLUMBING FIXTURES, CONDUIT, MILLWORK AND FLOOR FINISHES, WHETHER SPECIFICALLY INDICATED OR NOT.
11. THE CONTRACTOR IS TO PATCH ALL DEMOLISHED ELECTRICAL AND DATA OUTLETS IN EXISTING WALLS TO REMAIN. TAPE/SAND & PREPARE TO RECEIVE FINISHES AS SCHEDULED.
12. DURING DEMOLITION AND SUBSEQUENT CONSTRUCTION, CONTRACTOR SHALL MAKE ALL EFFORTS TO PROTECT EXISTING CONSTRUCTION AND FINISHES INCLUDING ADJACENT OFFICE AREAS, ELEVATOR CABS, TOILETS AND PUBLIC CORRIDORS.

wall legend

- EXISTING WALL / PARTITION TO REMAIN
- EXISTING WALL / PARTITION TO BE REMOVED
- EXISTING EXTERIOR MASONRY WALL TO REMAIN
- EXISTING CONCRETE WALL TO REMAIN

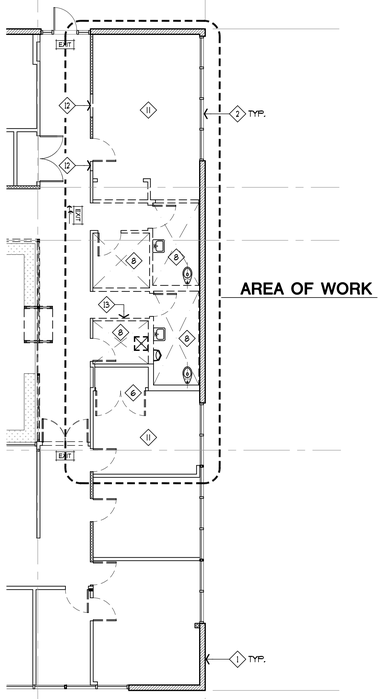

partial alternate demolition plan (2)
SCALE: 1/8"=1'-0"

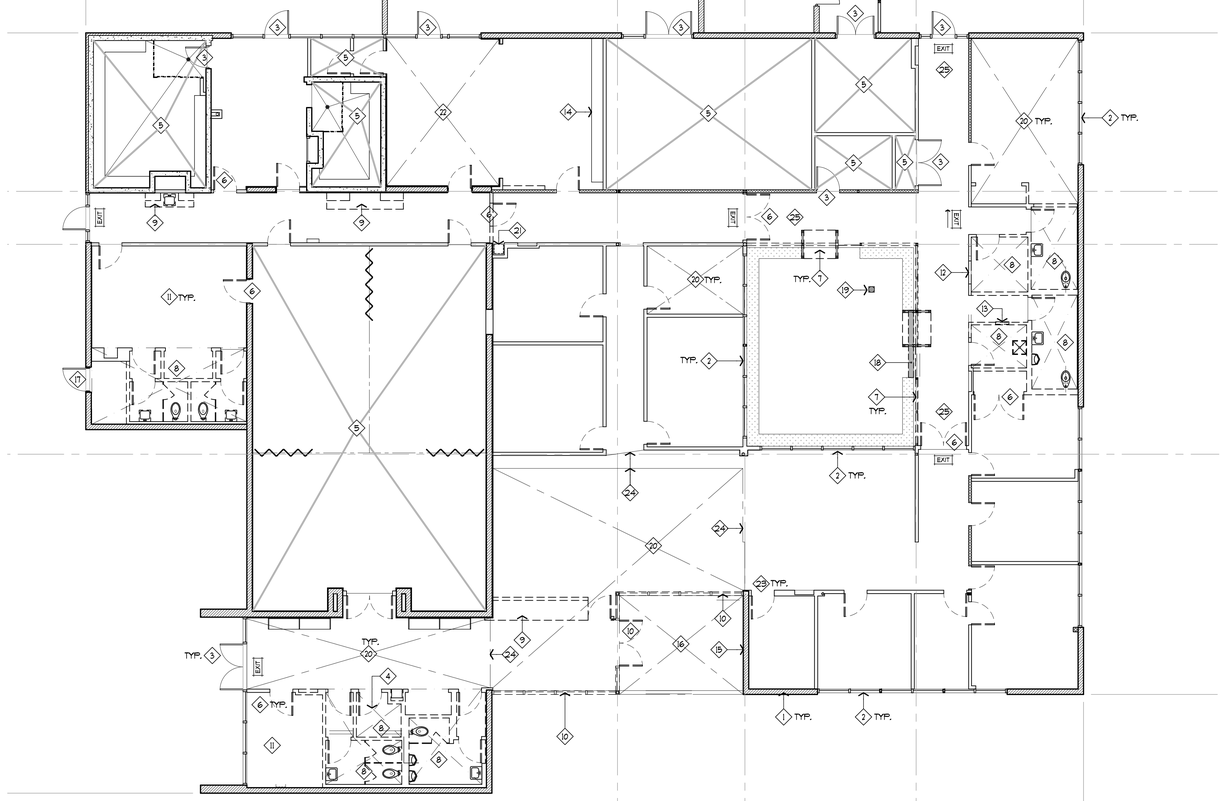

overall demolition plan (1)
SCALE: 1/8"=1'-0"

note:
ALL CONDITIONS INDICATED ARE EXISTING UNLESS NOTED OTHERWISE.

scale: 1/8" = 1'-0"
0 8 16 24 32

NORTH

job no.	A9041109-P
drawn	
submittal	
Plan Check Submittal	03.27.2012
Plan Check Re-Submittal	10.29.2012
Issue For Bid	10.29.2012
revision	
1 Client Revision	10-23-2012

all ideas, designs and plans represented by this drawing are the exclusive property of the withee malcolm partnership, architects, and shall not be reproduced in whole or in part without the express prior written permission of said architects, any unauthorized reuse of these plans other than for the project and location shown is prohibited.

Tenant Improvements / Accessibility Upgrades for :
CITY OF TORRANCE
PERSONNEL BUILDING
3231 Torrance Boulevard, Torrance, CA 90503

OWNER : City of Torrance, Department of General Services
3350 Civic Center Drive, Torrance, CA 90503

WITHEE MALCOLM ARCHITECTS, LLP
2251 W. 190th Street
Torrance, Ca 90504
t. 310.217.8885
f. 310.217.0425

sheet title **demolition plan**

sheet **A2-01**

BID SET ONLY

keynotes

17. NEW 2'-0"X2'-0" SKYLIGHT ABOVE. SEE CEILING PLAN.
18. ALIGN TOP OF NEW WALLS WITH (E) CEILING/SOFFIT ABOVE AT THIS CORNER.
19. PROVIDE 1/4" COPPER COLD WATER LINE TO REFRIGERATOR. VERIFY EXACT LOCATION WITH TENANT.
20. PROVIDE 1/4" COPPER COLD WATER LINE ABOVE COUNTER FOR COFFEE MAKER. VERIFY EXACT LOCATION WITH TENANT.
21. (CONTRACTOR TO PROVIDE COST ALTERNATE TO PROVIDE A NEW LAYER OF SKIM COAT SMOOTH PLASTER AT ALL HALLWAY WALLS & PAINT TO MATCH EXISTING)
22. (CONTRACTOR TO PROVIDE COST ALTERNATE TO PROVIDE A LAYER OF SKIM COAT SMOOTH PLATER OVER THE EXISTING CEILING & PAINT TO MATCH EXISTING)
23. EXISTING STOREFRONT DOOR, FRAME AND HARDWARE TO REMAIN.
24. EXTEND EXISTING WIRING FOR NEW RELOCATED GATE RELEASE BUTTON AND PROVIDE ELECTRICAL FOR ELECTRIC STRIKE AT THIS GATE.
25. PROVIDE ALTERNATE TO REPLACE EXISTING DOOR AND HARDWARE. SEE HARWARE SET 13, ON SHEET A4-01.
26. MODIFY EXISTING DOOR TO ACCOMMODATE LOUVER AT BOTTOM. PAINT LOUVER TO MATCH DOOR FRAME AND DOOR TO MATCH EXISTING. REPLACE DOOR IF MORE ECONOMICAL.
27. PATCH & REPAIR WALL AS REQUIRED TO MATCH EXISTING, (WHERE EXISTING WALL WAS REMOVED).
28. REPAIR & REWORK (E) WOOD DOOR FRAME TO ACCOMMODATE NEW DOOR SWING.
29. PROVIDE NEW GYP.BD. CASED OPENING, WHERE (E) WOOD DOOR FRAME WAS REMOVED
30. PROVIDE NEW GYP.BD. CASED HEADER, WHERE (E) WALL, DOOR & FRAME WAS REMOVED
31. EXISTING AREA DRAIN TO REMAIN

1. EXISTING EXTERIOR MASONRY WALLS.
2. EXISTING EXTERIOR GLAZING.
3. INFILL AND PAINT EXISTING DOOR/WINDOW OPENING WITH WOOD STUDS. MATCH ADJACENT WALL CONSTRUCTION, FINISH AND ALIGN WITH EXISTING. (SEE STRUCT. DWG. AS REQUIRED)
4. EXISTING DOOR, FRAME AND HARDWARE TO REMAIN.
5. PROVIDE ACCESSIBLE ENTRANCE SIGNAGE. SEE DETAIL 2/A4-01.
6. NEW COUNTER SEE COUNTER ELEVATIONS.
7. WALL FURRING: ⅝" WATER RESISTANT GYP. BD. OVER STUD FURRING TO MATCH EXISTING ADJACENT WALL CONSTRUCTION AND ALIGN FINISH WITH EXISTING.
8. PROVIDE STUCCO AT EXTERIOR FACE OF DOOR INFILL TO MATCH EXISTING.
9. ALL EXISTING IS TO REMAIN AT THIS AREA/ROOM, U.N.O.
10. NEW LOCATION OF RELOCATED ELECTRICAL PANEL.
11. EXISTING PLANTERS TO REMAIN, TYP.
12. NEW STOREFRONT SYSTEM. SEE EXTERIOR ELEVATIONS SHEET A3-01.
13. WALL FURRING: ⅝" WATER RESISTANT GYP. BD. OVER ⅞" METAL FURRING CHANNELS @ 16" OC.
14. NEW 4" THICK CONC. SLAB WITH 6x6 / 10x10 E.W.W.M. AT MID-DEPTH AND ALIGN WITH EXISTING FLOOR SLAB.
15. NEW CURTAIN WALL GLAZING SYSTEM - "1600 SYSTEM 1 BY KAWNEER" OR US ALUMINUM EQUAL. CLEAR ANODIZED ALUM. FINISH (CONTRACTOR TO VERIFY, TO MATCH EXISTING.
16. NEW 8" W. CAST CONCRETE TRENCH DRAIN. PROVIDE NEW STEEL GRATE. SLOPE TO DRAIN INTO (E) ADJACENT PLANTERS. SEE DETAIL 6/A6-03.

floor plan notes

1. FOR TYPICAL METAL STUD DETAILS AND CONNECTIONS REFER TO DETAIL 1/A6-02.
2. TYPE, FINISH, AND HEIGHT OF ALL INTERIOR WINDOW FRAMES TO MATCH DOOR FRAMES AND EXISTING.
3. EXIT INDICATES AN EXISTING EXIT SIGN AND NEW EXIT INDICATES A NEW EXIT SIGN TO MATCH EXISTING. EXIT SIGNS AND DIRECTIONAL EXIT SIGNS SHALL HAVE MIN. 6" H x 3/4" STROKE BLOCK LETTERS ON A CONTRASTING BACKGROUND. WHENEVER THE BUILDING IS OCCUPIED, EXIT SIGNS SHALL BE LIT SO THEY ARE CLEARLY VISIBLE. EXIT SIGNS SHALL BE ILLUMINATED IN ACCORDANCE WITH CHAPTER 10 OF THE CBC. ANY REPLACEMENT EXIT SIGNS ARE TO MATCH EXISTING.
4. ADJUST ALL NEW AND EXISTING DOOR CLOSERS TO REMAIN NOT TO EXCEED A.D.A. MAXIMUM OPERATING FORCES WHERE APPLIES, WITHIN AREA OF WORK.
5. PROVIDE VENTILATION IN ACCORDANCE WITH CHAPTER 12 OF THE CALIFORNIA BUILDING CODE, 2010 EDITION.
6. GLAZING WITHIN 24" ARC OF A SWING DOOR OR 18" FROM FLOOR SHALL COMPLY WITH SECTION 2406 OF THE CALIFORNIA BUILDING CODE AND BE TEMPERED.
7. FOR PATCHES TO EXISTING CONCRETE SLAB FROM PLUMBING OR OTHER TRENCHES - SEE 15/A6-01. FINISH TO MATCH EXISTING.
8. PATCH ANY EXISTING WALLS TO REMAIN THAT NEED REPAIR AND PREPARE FOR NEW PAINT, WITHIN THE AREA OF WORK.
9. CONTRACTOR TO VERIFY EXACT HEIGHT TO ROOF/FLOOR STRUCTURE WHERE FULL HEIGHT STUDS ARE INDICATED. CONTRACTOR MAY SUBMIT ALTERNATIVE FOR METAL STUD CONFIGURATION, TO CHANGE STUD SECTION DESIGNATION TO ACCOMMODATE THE SPAN INSTEAD OF USING THE STUD SIZE LISTED ON THIS DRAWING.
10. ALL GYPSUM BOARD EDGES SHALL BE BLOCKED WHERE IT DOES NOT FALL ON A FRAMING MEMBER.
11. PATCH AND REPAIR WALLS WHERE SWITCHES, OUTLETS, CARD READERS, THERMOSTATS, ETC. WERE REMOVED.
12. ALL ROOF WORK SHOULD BE PERFORMED BY A CERTIFIED/LICENSED ROOFING CONTRACTOR AND FOLLOW MANUFACTURER'S (GAF OR TO MATCH EXISTING) RECOMMENDATIONS.

wall legend

- EXISTING WALL / PARTITION TO REMAIN
- EXISTING EXTERIOR MASONRY WALL TO REMAIN
- EXISTING WALL FURRING
- EXISTING CONCRETE WALL TO REMAIN
- NEW WALL FURRING : 362 S 125-18 (3 ⅝" x 25 GA.) METAL STUDS @ 24" OC. (MAX. HT. 13'-4") W/ 5/8") GYP. BD. ONE SIDE (PROVIDE WATER RESISTANT @ RESTROOM) AND R-19 INSULATION ON EXISTING MASONRY WALL. (2/A6-02) (3/A6-02)
- NEW FULL HEIGHT ACOUSTIC PARTITION : 362 S 125 - 33 (3 ⅝" x 20 GA.) METAL STUDS @ 16" OC. (MAX. HEIGHT 20'-0") WITH ⅝" GYP. BD. EACH SIDE AND SOUND BATT INSULATION WHERE OCCURS. EXTEND METAL STUDS, GYP. BD., AND INSULATION TO UNDERSIDE OF STRUCTURE ABOVE, U.N.O.. PROVIDE WATER RESISTANT GYP. BD. @ RESTROOM. (3/A6-02) (5/A6-02) (5.5/A6-02) (7/A6-02)

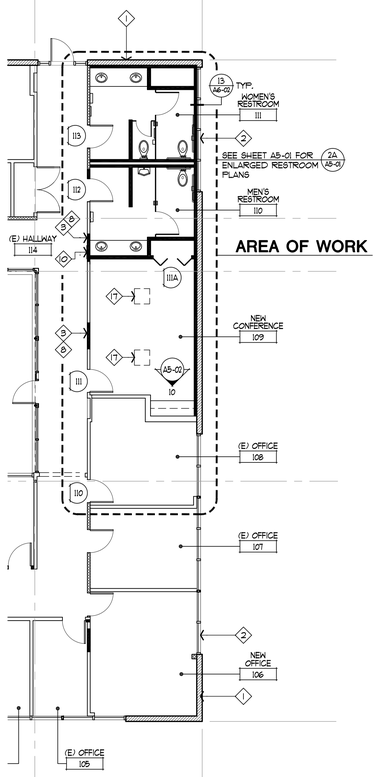

partial alternate floor plan
SCALE: 1/8"=1'-0"
2

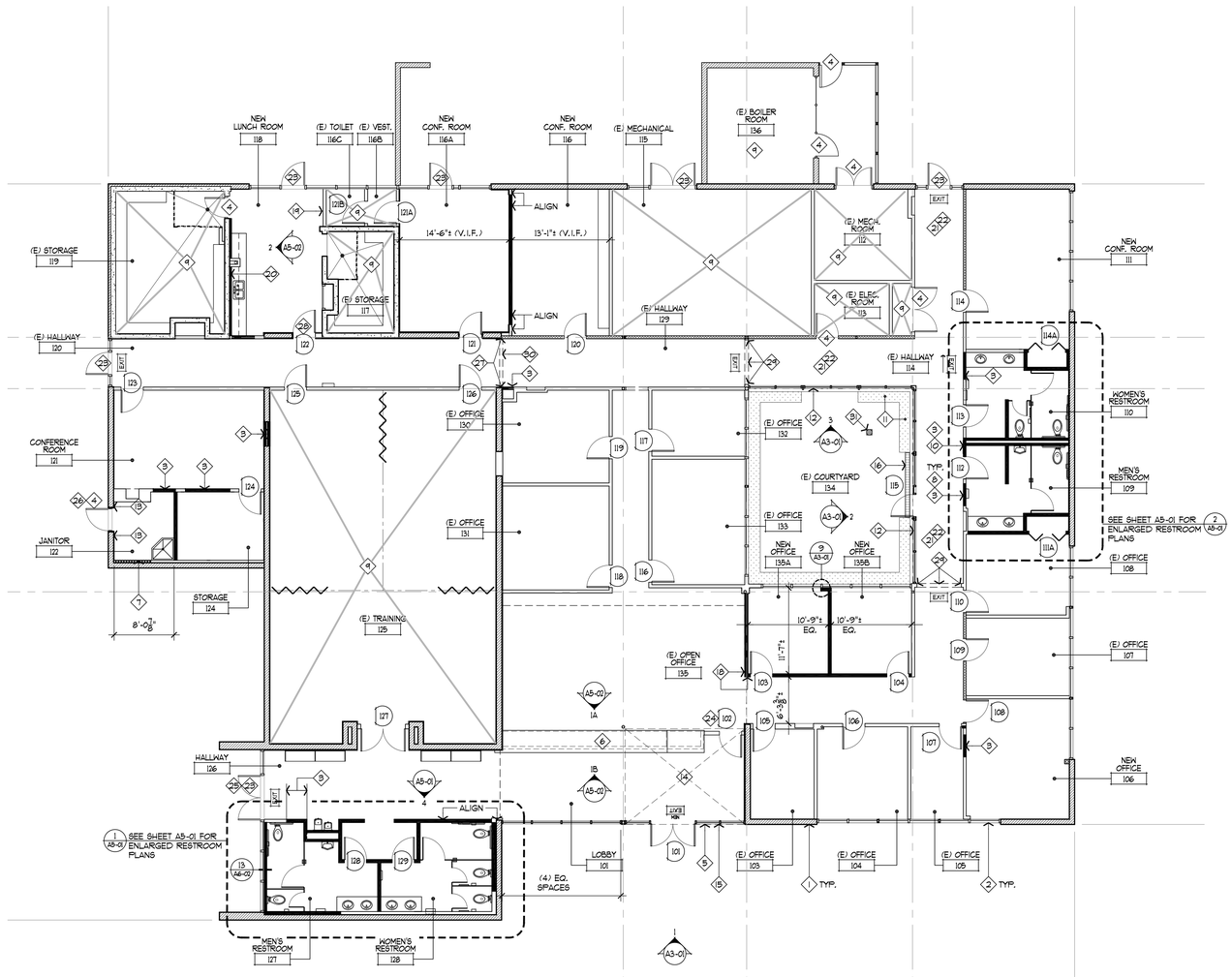

floor plan
SCALE: 1/8"=1'-0"
1

note:
ALL CONDITIONS INDICATED ARE EXISTING UNLESS NOTED OTHERWISE.

scale: 1/8" = 1'-0"
0 8 16 24 32

NORTH

job no. A9041109-P
drawn
submittal
Plan Check Submittal 03.27.2012
Plan Check Re-Submittal 10.29.2012
Issue For Bid 10.29.2012

revision

Tenant Improvements / Accessibility Upgrades for :
CITY OF TORRANCE
PERSONNEL BUILDING
3231 Torrance Boulevard, Torrance, CA 90503

OWNER : City of Torrance, Department of General Services
3350 Civic Center Drive, Torrance, CA 90503

WITHEE MALCOLM ARCHITECTS, LLP
2251 W. 190th Street
Torrance, Ca 90504
t. 310.217.8885
f. 310.217.0425

all ideas, designs and plans represented by this drawing are the exclusive property of the withee malcolm partnership, architects, and shall not be reproduced in whole or in part without the express prior written permission of said architects, any unauthorized reuse of these plans other than for the project and location shown is prohibited.

sheet title **floor plan**
sheet **A2-02**

BID SET ONLY

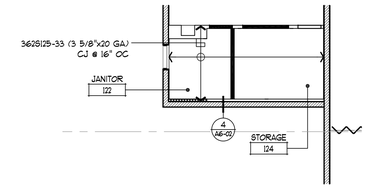

partial ceiling joist framing plan 5
SCALE: 1/8"=1'-0"

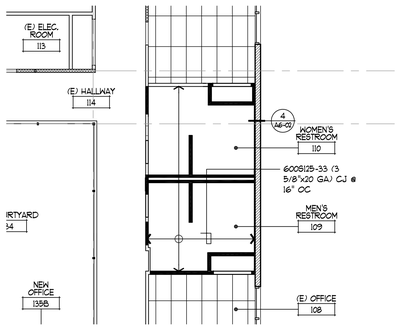

partial ceiling joist framing plan 4
SCALE: 1/8"=1'-0"

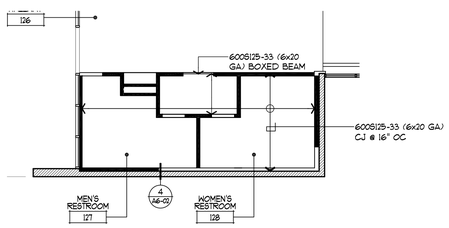

partial ceiling joist framing plan 3
SCALE: 1/8"=1'-0"

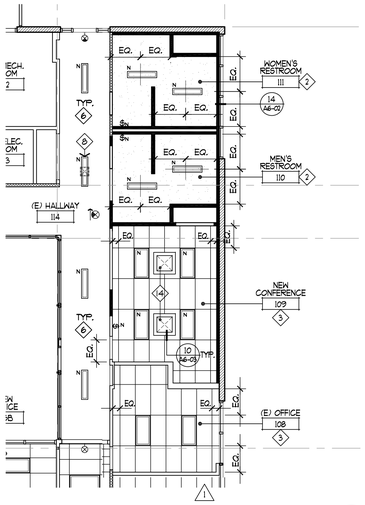

partial alternate reflected ceiling plan 2
SCALE: 1/8"=1'-0"

keynotes

1. EXISTING CEILING AND LIGHT FIXTURES ARE TO REMAIN IN THIS AREA, U.N.O.
2. NEW GYP. BD. CEILING @ 8'-5"± AFF.
3. NEW SUSPENDED CEILING @ 8'-5" AFF.
4. NEW GYP. BD. SOFFIT AT 8'-0" AFF.
5. EXISTING BUILT-IN SHELVING BELOW.
6. EXISTING EXTERIOR PLASTER CEILING IS TO REMAIN IN THIS AREA. EXISTING RECESSED LIGHT FIXTURES ARE TO BE REMOVED AND REPLACE WITH NEW SURFACE MOUNTED LIGHT FIXTURES.
7. HATCH INDICATES REMOVE PORTION OF EXISTING CEILING TILE TO THE NEAREST ADJACENT FULL TILE. TO PREPARE FOR NEW CEILING, REPLACE WITH NEW/OR RELOCATED TILE TO MATCH EXISTING, SEE REFLECTED CEILING LEGEND, TYP.
8. NEW SURFACE MOUNTED LIGHT FIXTURE IN HALLWAY, TYP. U.N.O.
9. NOT USED
10. NOT USED
11. NOT USED
12. NOT USED
13. NEW SUSPENDED CEILING @ 13'-0"± AFF.
14. NEW 2'-0"X2'-0" SKYLIGHT BY "BRISTOLITE" MODEL: AL-CM-2
15. REPAIR/REPLACE CEILING AS REQUIRED WHERE (E) CABINETS WHERE REMOVED.

reflected ceiling plan notes

1. ALL LIGHT FIXTURES, SWITCHES, THERMOSTATS, ETC. ARE TO CONFORM WITH TITLE 24 ENERGY CONSERVATION CODE & A.D.A.
2. CONDUIT MUST BE A MINIMUM OF 7-1/2" CLEAR ABOVE THE CEILING GRID & BE COORDINATED W/ NEW DUCTS & SPRINKLERS.
3. CONTRACTOR TO NOTIFY ARCHITECT OF ANY CONFLICTS WITH LIGHT FIXTURE LOCATIONS & HVAC DUCTWORK PRIOR TO ORDERING FIXTURES OR INSTALLATION OF CEILING GRID.
4. PROVIDE EMERGENCY LIGHTING PER CODE.
5. ALL SUSPENDED CEILINGS ARE TO BE INSTALLED AT THE ELEVATION TO MATCH THE EXISTING ADJACENT CEILINGS.
6. PATCH AND REPAIR WALLS WHERE SWITCHES WERE REMOVED.
7. ALL LIGHTING CONTROLS SHOWN SHALL BE MOUNTED AT +3'-6" HEIGHT TO CENTERLINE UNLESS OTHERWISE NOTED. WHERE MORE THAN ONE CONTROL IS SHOWN AT A GIVEN LOCATION, CONTROLS SHALL BE GANGED TOGETHER AND COVERED BY A SINGLE BUILDING STANDARD COVERPLATE.
8. ALL ACOUSTIC CEILING TILES DAMAGED DURING THE COURSE OF DEMOLITION OR CONSTRUCTION ARE TO BE REPLACED WITH MATCHING TILES.
9. ALL INCANDESCENT LIGHT FIXTURES, SMOKE DETECTORS, SPRINKLER HEADS, AND SPEAKER OUTLETS, OR OTHER FIXTURES ARE TO BE INSTALLED IN DEAD CENTER OF CEILING TILES UNLESS OTHERWISE NOTED.
10. HVAC AND ELECTRICAL DESIGN CRITERIA SHALL CONFORM TO STATE OF CALIFORNIA TITLE 24 ENERGY CONSERVATION REQUIREMENTS .
11. CONTRACTOR TO LABEL THE BUILDING ELECTRICAL PANEL DIRECTORY WITH ANY CHANGE TO CIRCUITS. LABELING WILL BE TYPED, NOT HAND WRITTEN.
12. THE CONTRACTOR SHALL PROVIDE ACCESS TO ABOVE THE CEILING FOR TENANT CABLING CONTRACTORS' INSTALLATION. THE CONTRACTOR SHALL BE RESPONSIBLE FOR COORDINATING THE SCHEDULING OF THESE OTHER TRADES.
13. THE ELECTRICAL CONTRACTOR SHALL SURVEY EXISTING LIGHTING FIXTURES TO BE REUSED AND RELAMP, REBALAST ANY NON-FUNCTIONING LIGHT FIXTURE.
14. WHERE EXISTING CEILING TILES ARE REUSED, THEY MUST BE IN GOOD CONDITION AND MATCH THOSE IN THE SAME ROOM.
15. IN ROOMS WITH A SPAN IN BOTH DIRECTIONS OF MORE THAN 25', A MINIMUM WALL ANGLE SIZE OF AT LEAST 1" HORIZONTAL LEG SHALL BE USED AT PERIMETER WALLS AND INTERIOR FULL HEIGHT PARTITIONS. THE FIRST TILE SHALL BE 3/4" CLEAR FROM WALL SURFACE. SEE PLAN FOR APPLICABLE CONDITIONS AND DETAIL 4/A6-03.
16. ALL NEW LIGHT SWITCHES TO MATCH EXISTING AND SHALL COMPLY WITH BUILDING STANDARDS LIGHTING CONTROLS.

reflected ceiling legend

- EXIT SIGN, TYPICAL. SHADED AREA INDICATES SIGN FACE. ARROW INDICATES DIRECTION OF EXIT.
- INDICATES EXISTING SUPPLY REGISTER TO REMAIN
- INDICATES EXISTING RETURN REGISTER TO REMAIN
- $ INDICATES EXISTING LIGHT SWITCH @ 48" AFF MAX., SEE ELECTRICAL PLANS
- $N INDICATES NEW LIGHT SWITCH @ 48" AFF MAX. TO MATCH EXISTING, SEE ELECTRICAL PLANS
- N INDICATES NEW LIGHT FIXTURE
- R INDICATES EXISTING TO BE REMOVED
- ER INDICATES EXISTING TO BE RELOCATED & REUSED

NOTE: CEILING GRIDS TO BE CENTERED WHERE NO DIRECTION INDICATED. DIMENSION OR GRID START POINT SHALL APPLY WHERE INDICATED. CENTER CLG. GRID IN ALL ROOMS U.N.O.

- EXISTING A.C. CEILING TILE TO REMAIN
- NEW OR RELOCATED A.C. CEILING TILE TO MATCH EXISTING
- NEW GYP. BD. CEILINGS/SOFFIT
- 1 A6-03 NEW 2X4 SUSPENDED CEILING GRID AND TILES. GRID: CHICAGO METALLIC #1800 SNAP GRID SYSTEM - WHITE ICBO #1405. TILES: ARMSTRONG #2767 CORTEGA - SECOND LOOK II 2x4 TEGULAR - ICBO# 1344.
- INDICATES EXISTING LIGHT FIXTURE TO REMAIN
  REC = RECESSED LIGHT FIXTURE
  SUR = SURFACE MOUNTED LIGHT FIXTUTE
- INDICATES EXISTING LIGHT FIXTURE TO BE REMOVED
- INDICATES NEW 2x4 RECESSED PARABOLIC FLUORESCENT LIGHT FIXTURE
- INDICATES NEW 2x4 RECESSED FLUORESCENT LIGHT FIXTURE
- INDICATES NEW 1x4 RECESSED MOUNTED FLUORESCENT LIGHT FIXTURE
- INDICATES NEW 4 FT. STRIP SURFACE MOUNTED FLUORESCENT LIGHT FIXTURE.

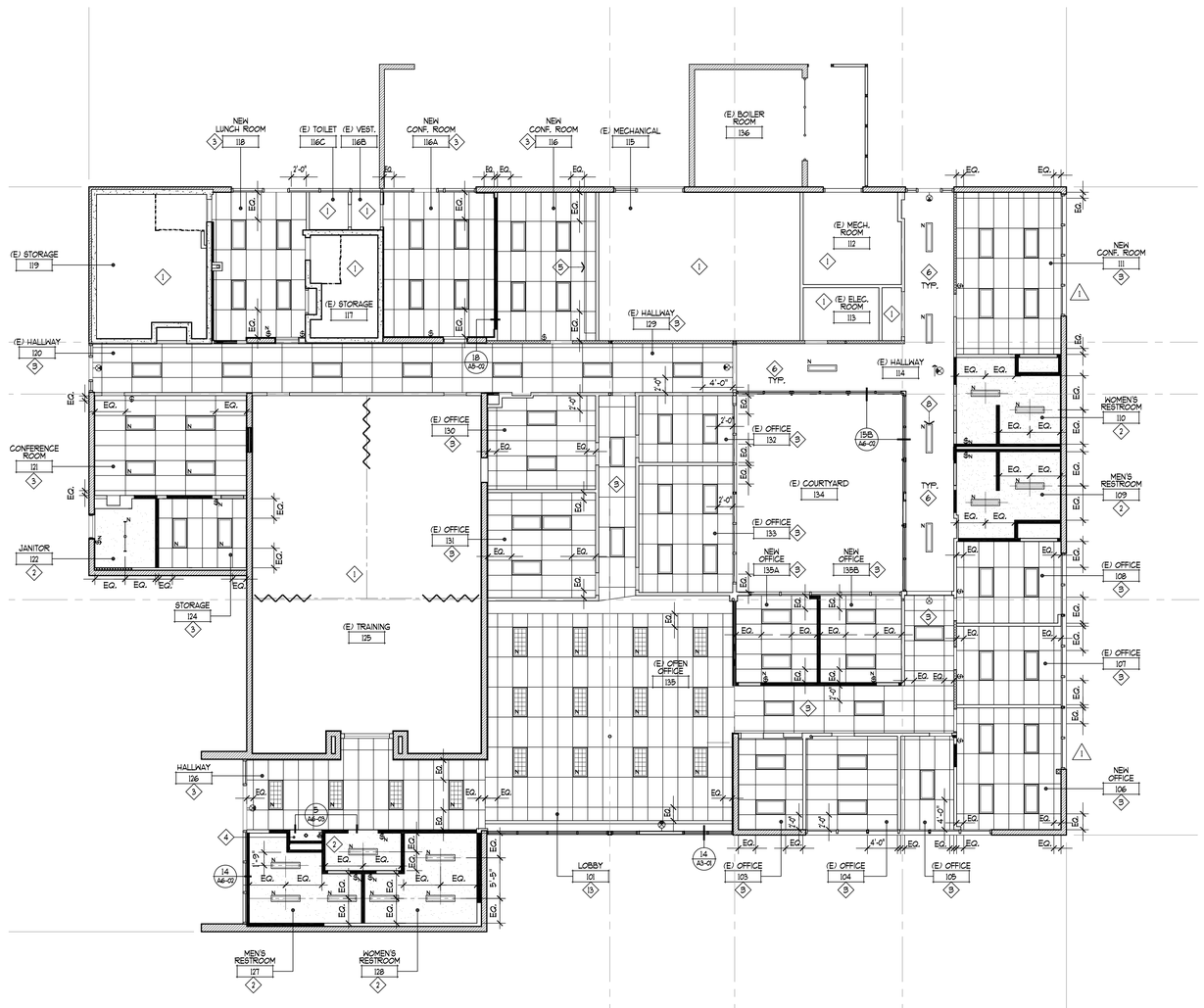

reflected ceiling plan 1
SCALE: 1/8"=1'-0"

note:
ALL CONDITIONS INDICATED ARE EXISTING UNLESS NOTED OTHERWISE.

scale: 1/8" = 1'-0"
0 8 16 24 32

NORTH

job no.	A9041109-P
drawn	
submittal	
Plan Check Submittal	03.27.2012
Plan Check Re-Submittal	10.29.2012
Issue For Bid	10.29.2012
revision	
1 Client Revision	10-23-2012

all ideas, designs and plans represented by this drawing are the exclusive property of the withee malcolm partnership, architects, and shall not be reproduced in whole or in part without the express prior written permission of said architects, any unauthorized reuse of these plans other than for the project and location shown is prohibited.

Tenant Improvements / Accessibility Upgrades for :
CITY OF TORRANCE
PERSONNEL BUILDING
3231 Torrance Boulevard, Torrance, CA 90503

OWNER : City of Torrance, Department of General Services
3350 Civic Center Drive, Torrance, CA 90503

WITHEE MALCOLM ARCHITECTS, LLP
2251 W. 190th Street
Torrance, Ca 90504
t. 310.217.8885
f. 310.217.0425

sheet title **reflected ceiling & framing plan**

sheet **A2-03**

BID SET ONLY

finish schedule

WALLS:

P-1	PAINT:	FRAZEE PAINTS FINISH: EGGSHELL COLOR: TBD
P-2	PAINT:	FRAZEE PAINTS FINISH: EGGSHELL COLOR: TBD
CT-2	CERAMIC TILE: (WITH GROUT G-2)	DALTILE GLAZED WALL TILE (4-1/4" X 4-1/4") COLOR: K175 BISCUIT PROVIDE WITH COVED BASE
CT-3	CERAMIC TILE: (ACCENT) (WITH GROUT G-2)	DALTILE GLAZED WALL TILE (4-1/4" X 4-1/4") COLOR: I469 GALAXY PROVIDE WITH COVED BASE
FRP-1	FIBERGLASS REINFORCED PANELS	MARLITE STYLE: STANDARD COLOR: WHITE

PARTITIONS:

TP-1	METAL	METPAR CORP. PARTITIONS (MEN & WOMEN) STYLE: FLOOR MOUNT, TOP BRACE COLOR: #304 NICKEL SILVER

WINDOW COVERINGS:

WC-1	WINDOW COVERINGS	LEVOLOR RIVIERA, 1" MINI BLINDS COLOR : TBD

FLOORS:

C-1	CARPET	SHAW CONTRACT GROUP 24"X24" CARPET TILE STYLE: GLAZE 54562 COLOR: MOONSTONE 62500 INSTALLATION: QUARTER TURNED
CT-1	CERAMIC TILE (WITH GROUT G-1)	DALTILE MOSAICS, 2" X 2", UNPOLISHED STYLE : KEYSTONES COLOR : SUEDE GRAY SPECKLE D208
VCT-1	VINYL COMPOSITION TILE	ARMSTRONG, 24x12 STYLE: RAFFIA COLOR: PEARL 55803
VCT-2	VINYL COMPOSITION TILE	ARMSTRONG, 24x12 STYLE: RAFFIA COLOR: SMOKE 55804
VCT-3	VINYL COMPOSITION TILE	ARMSTRONG, 24x12 STYLE: RAFFIA COLOR: CACAO 55805
SV-1	SHEET VINYL	ARMSTRONG - SELF COVING SHEET VINYL STYLE: POSSIBILITIES PETIT POINT COLOR: 88713 WHITE SAND

BASES:

B-1	RUBBER BASE	BURKE, RUBBER WALL BASE - 4"H COVED, USE CONTINUOUS ROLLS. COLOR: 523 BLACKBROWN

GROUT:

G-1	GROUT	CUSTOM BUILDING PRODUCTS POLYBLEND, SANDED GROUT COLOR : TBD
G-2	GROUT	CUSTOM BUILDING PRODUCTS POLYBLEND, SANDED GROUT COLOR : TBD

COUNTER

SS-1	SOLID SURFACE AT RESTROOM COUNTER	LG HAUSYS STYLE: HI-MACS CLASSIC COLOR : LUNAR SAND S108
PL-1	PLASTIC LAMINATE	NEVAMAR COLOR : MEBOOIT COPPER METALX
PL-2	PLASTIC LAMINATE	NEVAMAR COLOR : S2084T FOUNDRY

finish plan notes (cont'd)

10. PAINT SHALL BE LATEX ENAMEL, EGGSHELL FINISH AT ALL OFFICE, CORRIDOR, & LOBBY AREAS AND SEMI-GLOSS AT ALL RESTROOMS, LUNCHROOMS, COFFEE ROOMS, JANITOR ROOMS, STORAGE ROOMS, DOOR FRAMES, WINDOW FRAMES, & PAINTED DOORS. CONTRACTOR SHALL VERIFY SHEEN TO MATCH EXISTING.
11. FLOAT ALL AREAS WHERE FLOOR IS NOT LEVEL OR TRUE PRIOR TO FLOORING INSTALLATION. NOTIFY OWNER & ARCHITECT OF VARIANCE PRIOR TO FLOATING FLOOR.
12. WHERE NEW PAINT, FLOORING, WALL BASE, ETC. IS REQUIRED, PROVIDE NEW TO MATCH EXISTING, U.N.O.
13. CONTRACTOR SHALL PAINT ALL NEW WALLS & ANY OTHERS AFFECTED BY WORK, REPLACE FLOORING OR WALL BASE WHERE DAMAGED DUE TO CONSTRUCTION.
14. WHERE SIDELITES ARE REUSED, THEIR EXISTING WINDOW COVERINGS ARE TO BE REUSED AS WELL. REUSED WINDOW COVERINGS ARE TO BE IN GOOD CONDITION, FULLY FUNCTIONAL, AND CLEANED PRIOR TO INSTALLATION. IF MORE ECONOMICAL TO PROVIDE NEW, THEN DO SO.

keynotes

1. EXISTING FINISHES ARE TO REMAIN IN THIS AREA/ROOM, U.N.O.
2. EXISTING WOOD PANEL TO REMAIN IN THIS ROOM, TYP.
3. NOT USED
4. NEW COUNTER TOP. (PL-1)
5. PAINT THIS ENTIRE WALL TO MATCH EXISTING.
6. PROVIDE NEW BASE (B-1)
7. SEE ENLARGED RESTROOM PLAN AND ELEVATIONS FOR ADDITIONAL FINISH INFORMATION AT THE RESTROOMS, SHEET A5-01.
8. EXISTING SHELVING TO REMAIN
9. VCT LAYOUT PER FINISH PLAN. SEE FINISH SCHEDULE FOR VCT TILE LEGEND. ◆ INDICATES START OF FULL 12X24 TILE.

finish symbols

- WALL FINISH MATERIAL
- FLOOR FINISH MATERIAL
- BASE FINISH MATERIAL
- ITEM FINISH MATERIAL

finish plan notes

1. PROVIDE ALL NEW PAINT, FLOORING AND BASE THROUGHOUT OFFICE BUILDING, U.N.O. SEE PLAN
2. CARPET AND VINYL TILE INSTALLATION SHALL INCLUDE ANY PREPARATION NECESSARY TO PROVIDE A LEVEL AND SMOOTH SURFACE FREE OF DIRT, PAINT, OIL OR OTHER FOREIGN MATTER & ALLOWING INSTALLATION PER MANUFACTURERS SPECIFICATION.
3. ALL PAINT SHALL BE APPLIED OVER SMOOTH SANDED PRIMERED SURFACE WITH REQUIRED TWO COATS TO COVER COMPLETELY AND EVENLY. (TWO COATS MIN. AT DISCRETION OF ARCHITECT.)
4. PRIME AND PAINT ALL ACCESS DOORS, WALL DIFFUSERS, ETC. IN FINISHED WALL SURFACES TO MATCH ADJACENT SURFACE. PAINT SHALL BE APPLIED PRIOR TO ATTACHMENT TO FINISHED WALL SURFACE.
5. CARPET INSTALLER TO SEAM SEAL ALL CARPET SEAMS.
6. SUBMIT SAMPLES OF ALL FINISHES FOR ARCHITECT'S REVIEW PRIOR TO PROCEEDING, ALLOWING TIME FOR SUBMITTAL REVIEW AND FOR RESUBMITTALS AS REQUIRED:
   PAINT: (3) 8 1/2" X 11" BRUSHOUT SAMPLES OF ACTUAL FINISH
   FLOORING: (3) SAMPLES OF EACH MATERIAL TO BE USED
7. RESURFACE, SCAR PATCH, AND/OR SKIM COAT EXISTING WALLS AS NECESSARY TO RECEIVE NEW PAINT OR WALLCOVERING.
8. WHERE PATCHING OCCURS, SURFACE TEXTURE OF PATCH SHALL BE FLUSH WITH AND MATCH THE ADJACENT SURFACE TEXTURE.
9. PAINT ALL NEW FRAMES TO MATCH EXISTING.

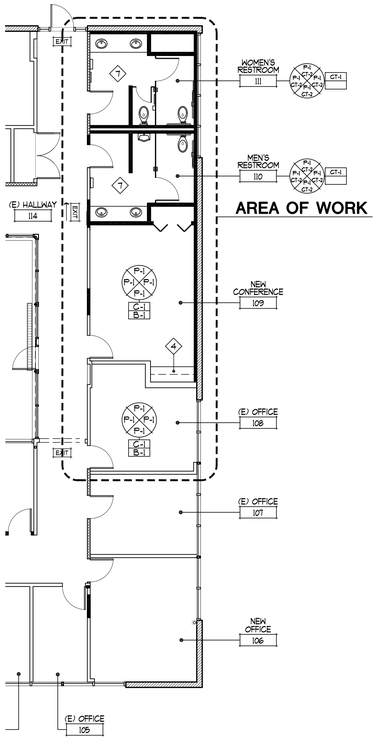

partial alternate finish plan (2)
SCALE: 1/8"=1'-0"

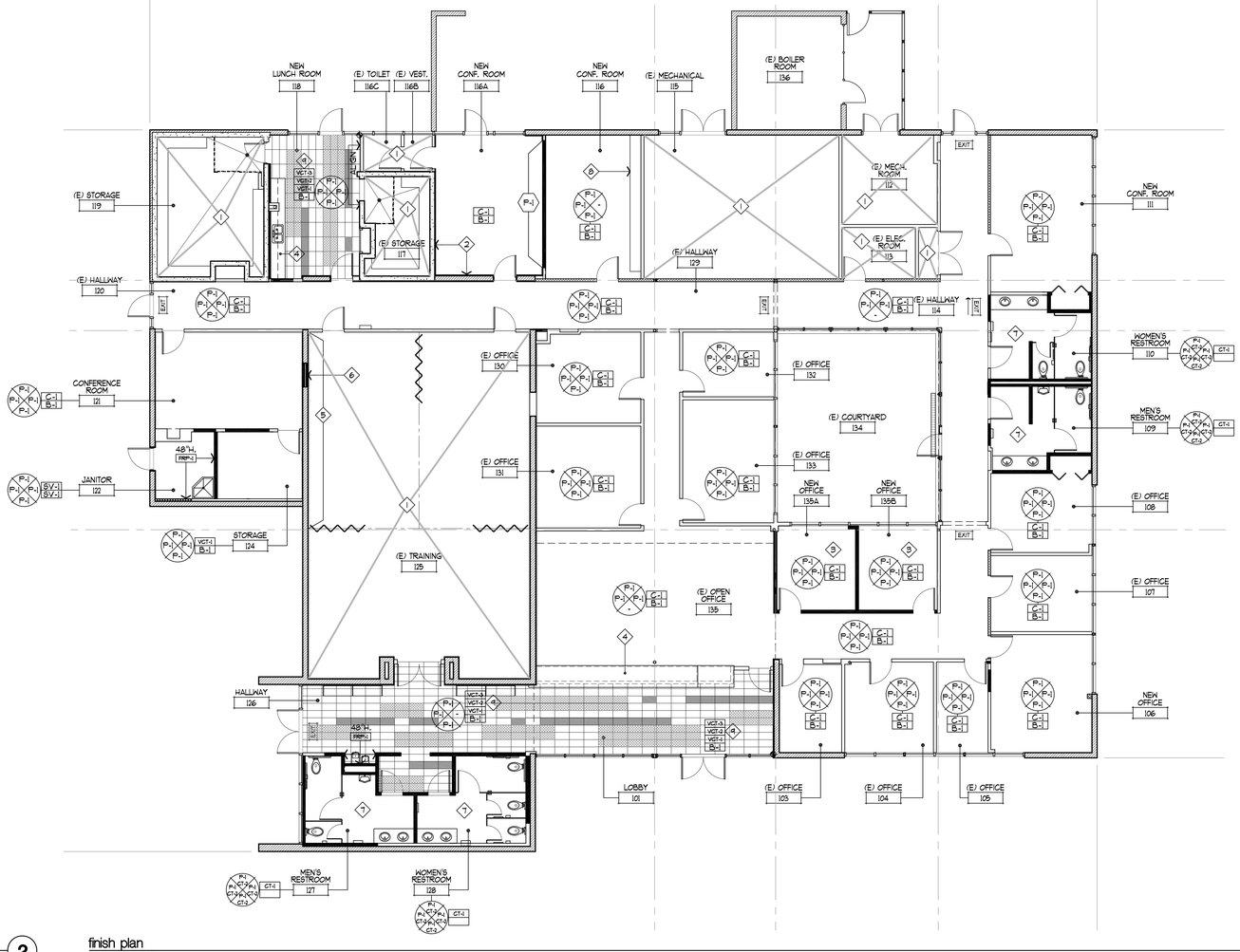

finish plan (1)
SCALE: 1/8"=1'-0"

note:
ALL CONDITIONS INDICATED ARE EXISTING UNLESS NOTED OTHERWISE.

scale: 1/8" = 1'-0"
0 8 16 24 32

NORTH

job no.	A9041109-P
drawn	
submittal	
Plan Check Submittal	03.27.2012
Plan Check Re-Submittal	10.29.2012
Issue For Bid	10.29.2012
revision	
1 Client Revision	10-23-2012

all ideas, designs and plans represented by this drawing are the exclusive property of the withee malcolm partnership, architects, and shall not be reproduced in whole or in part without the express prior written permission of said architects, any unauthorized reuse of these plans other than for the project and location shown is prohibited.

Tenant Improvements / Accessibility Upgrades for :
CITY OF TORRANCE
PERSONNEL BUILDING
3231 Torrance Boulevard, Torrance, CA 90503

OWNER : City of Torrance, Department of General Services
3350 Civic Center Drive, Torrance, CA 90503

WITHEE MALCOLM ARCHITECTS, LLP
2251 W. 190th Street
Torrance, Ca 90504
t. 310.217.8885
f. 310.217.0425

sheet title **finish plan**

sheet **A2-04**

BID SET ONLY

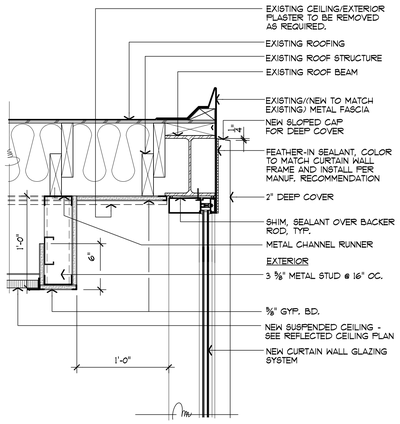

soffit detail
SCALE: 1 1/2"=1'-0" (14)

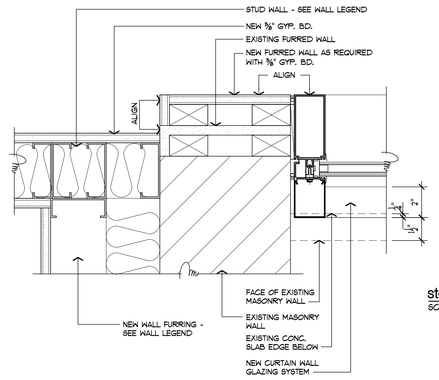

curtain wall jamb
SCALE: 3"=1'-0" (10)

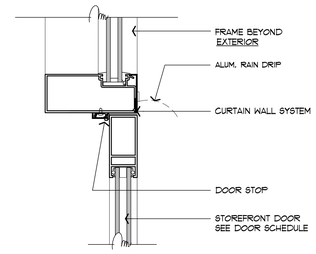

storefront door head - jamb similar
SCALE: 3"=1'-0" (6)

exterior finish/material legend

SYM.	DESCRIPTION	MANUFACTURER	REFERENCE	COLOR	REMARKS
1	PAINT	FRAZEE	-	CONTRACTOR TO VERIFY, TO MATCH (E)	-
2	METAL PANEL	ALCOA OR APPROVED EQUAL	REYNOBOND	FACTORY FINISHED TO MATCH EXISTING (CONTRACTOR TO VERIFY COLOR)	BOTH EXTERIOR AND INTERIOR SURFACES SHALL BE SMOOTH, FINISHED AND READY FOR PAINT. PAINT PANELS PRIOR TO INSTALLATION.
3	INSULATED GLASS	PPG OR APPROVED EQUAL	1" THK.	1/4" SOLARBAN 60 - 1/2" AIR - 1/4" CLEAR GLASS	1" DOUBLE GLAZING W/ 1/2" AIR SPACE, CONTRACTOR TO VERIFY COLOR AND REFLECTIVITY, TO MATCH EXISTING (U VALUE = 0.29 , S.H.G.C. = 0.380)
4	ALUMINUM CURTAIN WALL	KAWNEER OR US ALUMINUM EQUAL	1600 WALL SYSTEM 1 & ENTRANCE	CLEAR ANODIZED ALUM. (CONTRACTOR TOVERIFY, TO MATCH EXISTING	2-1/2" THK. X 6" DEEP EXTERIOR OFFSET GLAZED SYSTEM FOR 1" THK. GLASS
5	INSULATED SPANDREL GLASS	OLDCASTLE	OPACI COAT 300 #0-0186 LIGHT WHITE	CLEAR INTERIOR PANEL & CLEAR EXTERIOR PANEL	1" THK. WITH 1/2" AIR SPACE - APPLY OPACI-COAT TO INTERIOR SURFACE OF EXTERIOR PANE (SURFACE TWO)
6	ALUMINUM STOREFRONT	KAWNEER (OR US ALUMINUM EQUIVALENT)	500 STANDARD ENTRANCE & TRIFAB VERSA GLAZE 451T	CLEAR ANODIZED ALUM.	2" X 4-1/2" CENTER PLANE (GLAZED) SYSTEM FOR 1" THK. GLASS.

(T) INDICATES NEW TEMPERED GLASS

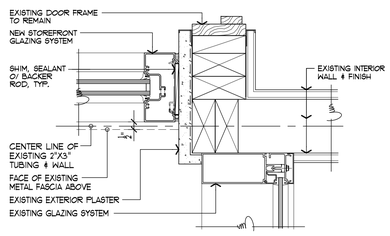

jamb @ existing wall
SCALE: 3"=1'-0" (13)

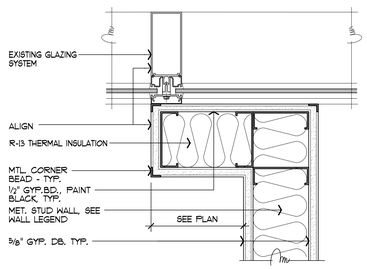

wall dogleg to existing mullion
SCALE: 3"=1'-0" (9)

exterior storefront door threshold
SCALE: 3"=1'-0" (5)

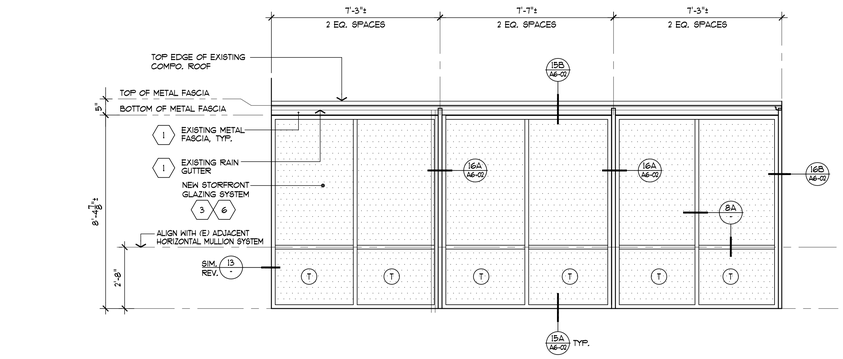

open court elevation
SCALE: 3/8"=1'-0" (3)

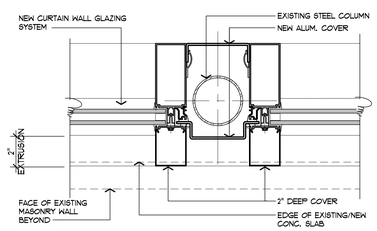

curtain wall jamb
SCALE: 3"=1'-0" (12)

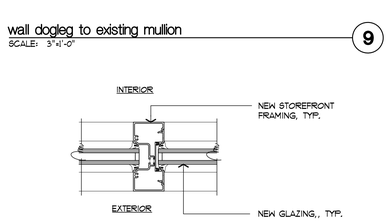

(A) vertical mullion (horizontal similar)

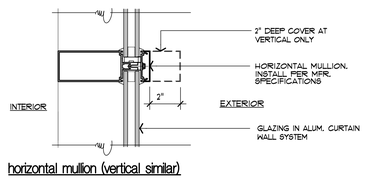

horizontal mullion (vertical similar)

mullion detial
SCALE: 3"=1'-0" (8)

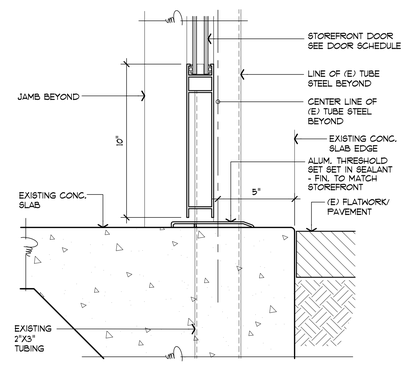

pen court door threshold
SCALE: 3"=1'-0" (4)

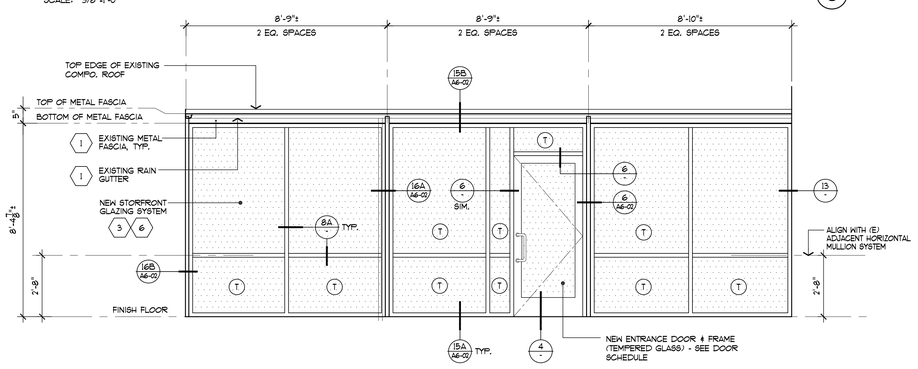

open court elevation
SCALE: 3/8"=1'-0" (2)

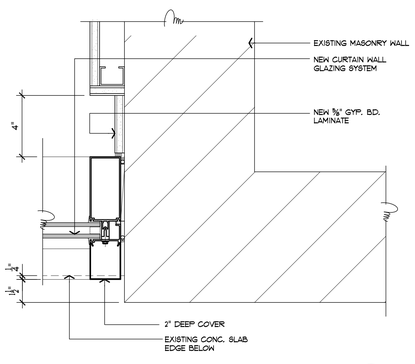

curtain wall jamb
SCALE: 3"=1'-0" (11)

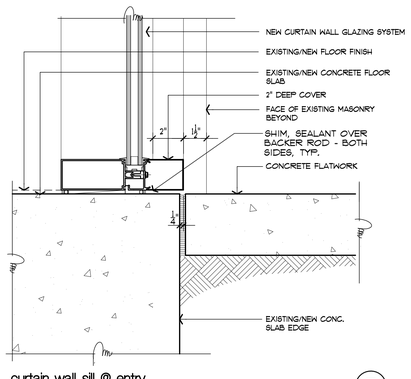

curtain wall sill @ entry
SCALE: 3"=1'-0" (7)

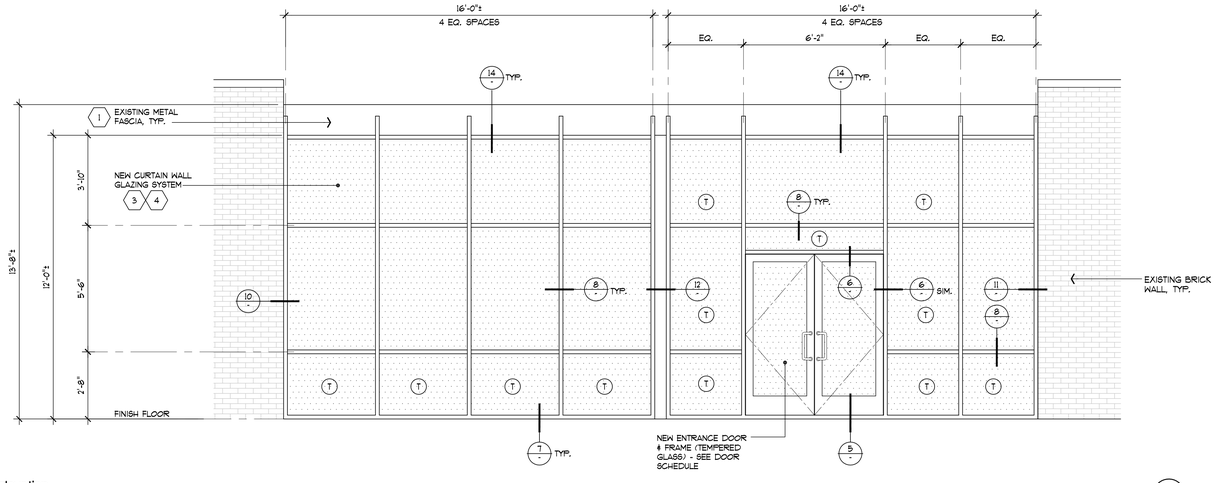

exterior elevation
SCALE: 3/8"=1'-0" (1)

job no.	A9041109-P
drawn	
submittal	
Plan Check Submittal	03.27.2012
Plan Check Re-Submittal	10.29.2012
Issue For Bid	10.29.2012
revision	

all ideas, designs and plans represented by this drawing are the exclusive property of the withee malcolm partnership, architects, and shall not be reproduced in whole or in part without the express prior written permission of said architects, any unauthorized reuse of these plans other than for the project and location shown is prohibited.

Tenant Improvements / Accessibility Upgrades for :
CITY OF TORRANCE
PERSONNEL BUILDING
3231 Torrance Boulevard, Torrance, CA 90503

OWNER : City of Torrance, Department of General Services
3350 Civic Center Drive, Torrance, CA 90503

WITHEE MALCOLM ARCHITECTS, LLP
2251 W. 190th Street
Torrance, Ca 90504
t. 310.217.8885
f. 310.217.0425

sheet title **partial elevation, section & details**

sheet **A3-01**

BID SET ONLY

hardware schedule

1. ALL NEW DOORS, FRAMES AND HARDWARE, SHALL CONFORM TO TITLE 24 DISABLED ACCESS REGULATIONS AND CALIFORNIA BUILDING CODE SECTION 1004, 2001 EDITION AND SHALL MATCH EXISTING.
2. PROVIDE FLOOR MOUNTED DOME TYPE DOORSTOPS TO MATCH EXISTING WITHIN THE AREA OF WORK.
3. ALL HARDWARE TO BE FURNISHED AND INSTALLED BY FINISH CARPENTER.
4. ALL CLOSERS ON FIRE RATED DOORS WILL BE THRU-BOLTED.
5. CONSULT TENANT REGARDING KEYING.
6. REPLACE ANY DOOR HARDWARE/ ACCESSORIES THAT ARE DAMAGED OR FOUND TO BE DEFICIENT IN OPERATION APPEARANCE OR IN PROVIDING SPECIFIED FIRE RATED ASSEMBLIES.
7. VERIFY THROAT SIZE OF EACH DOOR FRAME WITH SPECIFIC WALL CONSTRUCTION - SEE FLOOR PLANS AND VERIFY IN FIELD.
8. MOUNT ALL CLOSERS ON PULL SIDE U.N.O. ON DOOR SCHEDULE.
9. ALL KICK PLATES ARE TO BE MIN. 10" TALL AND ARE TO BE MOUNTED ON THE PUSH SIDE OF THE DOOR. FINISH IS TO MATCH DOOR HARDWARE.
10. FOR DOOR MOUNTED RESTROOM SIGNAGE, SEE 9/A6-02.
11. VERIFY ALL HARDWARE FUNCTIONS WITH TENANT PRIOR TO INSTALLATION.
12. ADJUST ALL CLOSERS (AT NEW AND EXISTING DOORS WITHIN THE AREA OF WORK) NOT TO EXCEED MAXIMUM A.D.A. OPERATING FORCES.

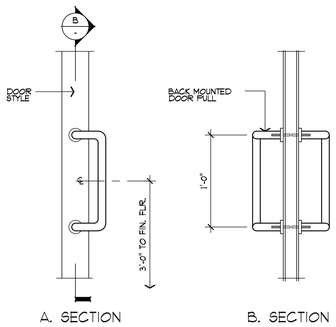

12 ROUND #22 L SERIES DOOR PULLS - BY HAGER COMPANIES

door pulls (3)
SCALE: 1 1/2"=1'-0"

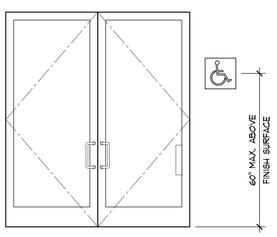

NOTE: DO NOT PLACE SIGN ON THE DOOR.

international symbol of accessibility @ bldg. entrance (2)
SCALE: 1/2"=1'-0"

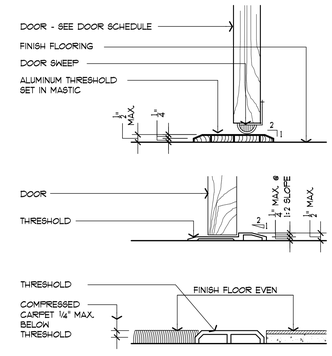

threshold (1)
SCALE: 3"=1'-0"

hardware schedule

GROUP	QUANTITY	ITEM	MANUFACTURER	MODEL NUMBER	FINISH	REMARKS
1	2	PIVOT SET	STOREFRONT	-	626	
	1	EXIT DEVICE	VON DUPRIN	CD33A-NL-OP	626	
	1	EXIT DEVICE	VON DUPRIN	CD3347A-EO	626	
	1	-	-	-	-	MATCH EXISTING C-R CYLINDER & KEYING
	2	OFFSET PULL	IVES	8190-0-0	626	(OR BY STOREFRONT MANUFACTURER)
	2	CONCEALED CLOSER	STOREFRONT	-	626	ON PUSH SIDE
	2	FLOOR STOP	HAGER	257F	626	
	1	RAIN DRIP	PEMKO	346C	CLEAR	
	2	DOOR BOTTOM	PEMKO	217AV	CLEAR	
	1	THRESHOLD	PEMKO	271A MSA	AL	
2	1 1/2 PAIR	HINGES	HAGER	BB 1279 4.5x4.5	626	
	1	OFFICE LOCKSET	CORBIN RUSSWIN	CL3351-NZD	626	
	1	STOP	HAGER	243F	626	
3	1 SET	BI FOLD DOOR HARDW.	HETTICH INTL.	WING LINE GRANT 1260	626	PROVIDE WITH FASCIA, TRACK, & ALL NECESSARY HARDWARE
	3 PAIR	HINGES	HAGER	BB 1279 4x4	626	
	2	PULL	HAGER	5D	626	
4	1 1/2 PAIR	HINGES	HAGER	BB 1279 4.5x4.5	626	
	1	CYLINDER W/BLANK PLATE	CORBIN RUSSWIN	DL3111 (2 3/4 DBLT, 2 3/4 STRIKE)	626	
	1	PUSH PLATE	HAGER	40R-6" X 16"	626	CUT FOR DEADBOLT
	1	PULL	HAGER	5D	626	
	1	DOME STOP	HAGER	243F	626	
	1	CLOSER	LCN	4040XP RW/PA	626	ON PULL SIDE @ 112 & 113 / ON PUSH SIDE @ 128 & 129
	1	10" KICKPLATE	HAGER	1986	626	ON PUSH SIDE
	1	THRESHOLD	PEMKO	271A MSA	ALUMINUM	
	1 SET	SEALS	PEMKO	303AS	ALUMINUM	
5	1 1/2 PAIR	HINGES	HAGER	BB 1279 4.5x4.5	626	
	1	STOREROOM LOCKSET	CORBIN RUSSWIN	CL3357-NZD	626	
	1	STOP	HAGER	243F	626	
6	1 1/2 PAIR	HINGES	HAGER	BB 1279 4.5x4.5	626	-
	1	PASSAGE SET	CORBIN RUSSWIN	CL3310-NZD	626	-
	1	DOME STOP	HAGER	243F	626	-
	1	CLOSER	LCN	4040XP RW/PA	626	
	1	10" KICKPLATE	HAGER	1986	626	ON PUSH SIDE
7	1	PIVOT-SET	STOREFRONT	-	626	-
	1	CYLINDER TURN	SHLAGE	09-904	626	ON INTERIOR SIDE
	1	-	-	-	-	MATCH EXISTING C-R CYLINDER & KEYING
	1	DEADLOCK	ADAMS RITE	MS1885/S-ADVISE BACKSET	628	
	1	STRIKE	ADAMS RITE	MS4002	628	
	1	EXIT INDICATOR	ADAMS RITE	4089	626	
	1	CONCEALED CLOSER	STOREFRONT		626	ON PUSH SIDE
	2	OFFSET PULLS	IVES	8190-0-0	626	(OR BY STOREFRONT MANUFACTURER)
	1	STOP	HAGER	257F	626	
	1	RAIN DRIP	PEMKO	346C	CLEAR	-
	1	DOOR BOTTOM	PEMKO	217AV	CLEAR	
	1	THRESHOLD	PEMKO	271A MSA	AL	
8	2	HINGES	HAGER	BB 1279 4.5X4	626	
	1	DEADLATCH	ADAMS RITE	4920AN-000 SERIES	628	
	1	ELECTRIC STRIKE	ADAMS RITE	7140 SERIES X FSE	628	
9	1 1/2 PAIR	HINGES	HAGER	BB 1279 4.5X4	626	
	1	PRIVACY SET	CORBIN RUSSWIN	CL3320-NZD	626	
	1	DOME STOP	HAGER	243F	626	
	1	THRESHOLD	PEMKO	271A	ALUMINUM	
	1	CLOSER	LCN	4040XP RW/PA	626	
	1	10" KICKPLATE	HAGER	1986	626	ON PUSH SIDE
10	1 1/2 PAIR	HINGES	-	-	-	EXISTING HINGES TO REMAIN (RE-USED)
	1	PANIC HARDWARE	VON DUPRIN	99L 996L x 17	626	
	-	-	-	-	-	MATCH EXISTING C-R CYLINDER & KEYING
	1	CLOSER	-	-	-	EXISTING FLOOR MOUNTED CLOSERS TO REMAIN (RE-USED)
	1	10" KICKPLATE	HAGER	1986	626	ON PUSH SIDE
	1	DOOR SHOE	PEMKO	217AV	ALUMINUM	
	1	DOME STOP	HAGER	243F	626	
	1 SET	SEALS	PEMO	2891 HEAD	CL	
	1 SET	SEALS	PEMKO	299 JAMB	ALUMINUM	
	1	THRESHOLD	PEMKO	271A MSA	ALUMINUM	
11	3 PAIR	HINGES	-	-	-	EXISTING HINGES TO REMAIN (RE-USED)
	1	PANIC HARDWARE	VON DUPRIN	9927EO - LBR	626	
	1	PANIC HARDWARE	VON DUPRIN	9927L - LBR E99L x 17	626	
	-	-	-	-	-	MATCH EXISTING C-R CYLINDER & KEYING
	2	CLOSER	-	-	-	EXISTING FLOOR MOUNTED CLOSERS TO REMAIN (RE-USED)
	2	10" KICKPLATE	HAGER	1986	626	ON PUSH SIDE
	2	DOOR SHOE	PEMKO	217AV	ALUMINUM	
	2	DOME STOP	HAGER	243F	626	
	1 SET	SEALS	PEMO	2891 HEAD	CL	
	1 SET	SEALS	PEMKO	299 JAMB	ALUMINUM	
	1	THRESHOLD	PEMKO	271A MSA	ALUMINUM	
12	1 1/2 PAIR	HINGES	HAGER	BB 1279 4.5x4.5	626	
	1	OFFICE LOCKSET	CORBIN RUSSWIN	CL3351-NZD	626	
	1	STOP	HAGER	243F	626	
	1	CLOSER	LCN	4040XP RW/PA	626	
13 ALT.	2	FLOOR HINGES & PIVOTS	-	-	-	REPLACE (E) FLOOR CLOSER AND PIVOTS
	1	EXIT DEVICE	VON DUPRIN	CD33A-NL-OP	626	
	1	EXIT DEVICE	VON DUPRIN	CD3347A-EO	626	
	-	-	-	-	-	MATCH EXISTING C-R CYLINDER & KEYING
	2	OFFSET PULL	IVES	8190-0-0	626	(OR BY STOREFRONT MANUFACTURER)
	2	FLOOR STOP	HAGER	267S	626	
	2	DOOR SHOE	PEMKO	2230ANB	ALUMINUM	
	1	THRESHOLD	PEMKO	271A MSA	ALUMINUM	
	1	WHEATHER STRIPPING	-	-	-	WHEATHER STRIPPING BY DOOR SUPPLIER

door schedule

(E) - DENOTES EXISTING
(N) - DENOTES NEW

†† - DENOTES DOOR AT ALTERNATE (ALT.) FLOOR PLAN

DOOR NUMBER	ROOM NAME/ ROOM NUMBER	DOOR TYPE	WIDTH	HEIGHT	THICKNESS	DOOR FINISH	FRAME TYPE	ASSEMBLY RATING	HARDWARE GROUP	DETAILS HEAD	DETAILS JAMB	DETAILS THRESHOLD	REMARKS
101	LOBBY #101	C	6'-0"	7'-0"	-	CLEAR ANODIZED	-	-	1	6/A3-01	6/A3-01	5/A3-01	REUSE DOOR WITH (N) HARDWARE IN NEW STOREFRONT FRAME †
102	(E) OPEN OFFICE #135 / LOBBY #101	-	3'-0"	2'-8"	1 3/8"	FL-2	-	-	8	19A/A8-02	19A/A8-02	-	(N) GATE, FRAME, AND HARDWARE - SOLID CORE WOOD GATE - SEE FINISH &CHEDULE FOR DOOR FINISH - PROVIDE RUBBER TRANSITION STRIP
103	NEW OFFICE #135A	A	3'-0"	7'-0"	1 3/4"	LACQUER	1	-	2	16/A8-02	16/A8-02	-	(N) DOOR, FRAME, AND HARDWARE
104	NEW OFFICE #135B	A	3'-0"	7'-0"	1 3/4"	LACQUER	1	-	2	16/A8-02	16/A8-02	-	(N) DOOR, FRAME, AND HARDWARE
105	(E) OFFICE #103	A	3'-0"	7'-0"	1 3/4"	LACQUER	(E)	-	2	19A/A8-02	19A/A8-02	-	(N) DOOR AND HARDWARE WITH (E) FRAME
106	(E) OFFICE #104	A	3'-0"	7'-0"	1 3/4"	LACQUER	(E)	-	2	19A/A8-02	19A/A8-02	-	(N) DOOR AND HARDWARE WITH (E) FRAME
107	(E) OFFICE #105	A	3'-0"	7'-0"	1 3/4"	LACQUER	(E)	-	2	19A/A8-02	19A/A8-02	-	(N) DOOR AND HARDWARE WITH (E) FRAME
108	NEW OFFICE #106	A	3'-0"	7'-0"	1 3/4"	LACQUER	(E)	-	2	19A/A8-02	19A/A8-02	-	(N) DOOR AND HARDWARE WITH (E) FRAME
109	(E) OFFICE #107	A	3'-0"	7'-0"	1 3/4"	LACQUER	(E)	-	2	19A/A8-02	19A/A8-02	-	(N) DOOR AND HARDWARE WITH (E) FRAME
110	(E) OFFICE #108	A	3'-0"	7'-0"	1 3/4"	LACQUER	(E)	-	2	19A/A8-02	19A/A8-02	-	(N) DOOR AND HARDWARE WITH (E) FRAME
†† 111	NEW CONFERENCE #109	A	3'-0"	7'-0"	1 3/4"	LACQUER	2	-	2	15/A8-02	15/A8-02	-	(N) DOOR, FRAME, AND HARDWARE †† (AT ALT. FLOOR PLAN)
111A	(E) OFFICE #108	E	6'-0"	7'-0"	1 3/4"	LACQUER	-	-	3	17B/A8-02	17C/A8-02	17A/A8-02	(N) DOOR AND HARDWARE †† SAME DOOR FOR NEW CONFERENCE #109 (AT ALT. FLOOR PLAN)
112	MEN'S RESTROOM #109	B	3'-0"	7'-0"	1 3/4"	LACQUER	2	-	4	15/A8-02	15/A8-02	1/A4-01	(N) DOOR, FRAME, AND HARDWARE †† SAME DOOR FOR MEN'S RESTROOM #110 (AT ALT. FLOOR PLAN)
113	WOMEN'S RESTROOM #110	B	3'-0"	7'-0"	1 3/4"	LACQUER	2	-	4	15/A8-02	15/A8-02	1/A4-01	(N) DOOR, FRAME, AND HARDWARE †† SAME DOOR FOR WOMEN'S RESTROOM #111 (AT ALT. FLOOR PLAN)
114	NEW CONFERENCE #111	F	3'-0"	7'-0"	1 3/4"	LACQUER	(E)	-	2	19B/A8-02	19B/A8-02	-	(N) DOOR AND HARDWARE WITH (E) FRAME
114A	NEW CONFERENCE #111	E	6'-0"	7'-0"	1 3/4"	LACQUER	-	-	3	17B/A8-02	17C/A8-02	17A/A8-02	(N) DOOR AND HARDWARE
115	(E) COURTYARD #134	D	3'-0"	7'-0"	-	CLEAR ANODIZED	-	-	7	6/A3-01	6/A3-01	4/A3-01	(N) STOREFRONT DOOR, FRAME, AND HARDWARE ALSO SEE JAMB DETAIL 6/A6-02
116	(E) OFFICE #133	A	3'-0"	7'-0"	1 3/4"	LACQUER	(E)	-	2	19A/A8-02	19A/A8-02	-	(N) DOOR AND HARDWARE WITH (E) FRAME
117	(E) OFFICE #132	A	3'-0"	7'-0"	1 3/4"	LACQUER	(E)	-	2	19A/A8-02	19A/A8-02	-	(N) DOOR AND HARDWARE WITH (E) FRAME
118	(E) OFFICE #131	A	3'-0"	7'-0"	1 3/4"	LACQUER	(E)	-	2	19A/A8-02	19A/A8-02	-	(N) DOOR AND HARDWARE WITH (E) FRAME
119	(E) OFFICE #130	A	3'-0"	7'-0"	1 3/4"	LACQUER	(E)	-	2	19A/A8-02	19A/A8-02	-	(N) DOOR AND HARDWARE WITH (E) FRAME
120	NEW CONFERENCE #116	A	3'-0"	7'-0"	1 3/4"	LACQUER	(E)	-	2	19B/A8-02	19B/A8-02	-	(N) DOOR AND HARDWARE WITH (E) FRAME
121	NEW CONFERENCE #116A	A	3'-0"	7'-0"	1 3/4"	LACQUER	(E)	-	2	-	-	-	(N) DOOR AND HARDWARE WITH (E) FRAME
121A	(E) VESTIBULE #116B	A	3'-0"	7'-0"	1 3/4"	LACQUER	(E)	-	6	-	-	-	(N) DOOR AND HARDWARE WITH (E) FRAME - PROVIDE RUBBER TRANSITION STRIP
121B	(E) TOILET #116C	A	3'-0"	7'-0"	1 3/4"	LACQUER	(E)	-	9	-	-	1/A4-01	(N) DOOR AND HARDWARE WITH (E) FRAME
122	NEW LUNCH ROOM #118	A	3'-0"	7'-0"	1 3/4"	LACQUER	(E)	-	12	-	-	-	(N) DOOR AND HARDWARE WITH (E) FRAME - PROVIDE RUBBER TRANSITION STRIP
123	NEW CONFERENCE #121	A	3'-0"	7'-0"	1 3/4"	LACQUER	(E)	-	2	19A/A8-02	19A/A8-02	-	(N) DOOR AND HARDWARE WITH (E) FRAME
124	STORAGE #124	B	3'-0"	7'-0"	1 3/4"	LACQUER	2	-	5	15/A8-02	15/A8-02	-	(N) DOOR, FRAME, AND HARDWARE - PROVIDE RUBBER TRANSITION STRIP
125	(E) TRAINING #125	A	3'-0"	7'-0"	1 3/4"	LACQUER	(E)	-	10	-	-	-	(N) DOOR AND HARDWARE WITH (E) FRAME - PROVIDE RUBBER TRANSITION STRIP
126	(E) TRAINING #125	A	3'-0"	7'-0"	1 3/4"	LACQUER	(E)	-	10	-	-	-	(N) DOOR AND HARDWARE WITH (E) FRAME - PROVIDE RUBBER TRANSITION STRIP
127	(E) TRAINING #125	A1	3'-0"	7'-0"	1 3/4"	LACQUER	(E)	-	11	-	-	-	(N) DOOR AND HARDWARE WITH (E) FRAME - PROVIDE RUBBER TRANSITION STRIP
128	MEN'S RESTROOM #127	B	3'-0"	7'-0"	1 3/4"	LACQUER	2	-	4	15/A8-02	15/A8-02	1/A4-01	(N) DOOR, FRAME, AND HARDWARE MOUNT CLOSER ON PUSH SIDE
129	WOMEN'S RESTROOM #128	B	3'-0"	7'-0"	1 3/4"	LACQUER	2	-	4	15/A8-02	15/A8-02	1/A4-01	(N) DOOR, FRAME, AND HARDWARE MOUNT CLOSER ON PUSH SIDE

door types

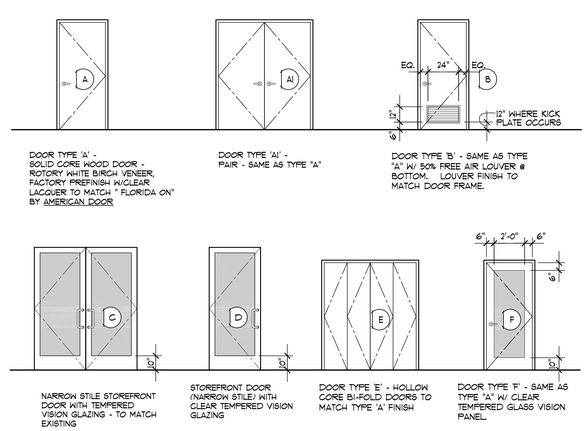

frame types

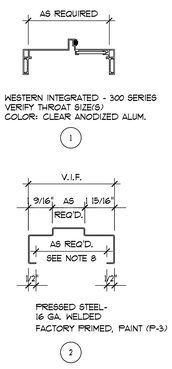

job no. A9041109-P
drawn
submittal
Plan Check Submittal 03.27.2012
Plan Check Re-Submittal 10.29.2012
Issue For Bid 10.29.2012

revision

Tenant Improvements / Accessibility Upgrades for :
CITY OF TORRANCE
PERSONNEL BUILDING
3231 Torrance Boulevard, Torrance, CA 90503

OWNER : City of Torrance, Department of General Services
3350 Civic Center Drive, Torrance, CA 90503

WITHEE MALCOLM ARCHITECTS, LLP
2251 W. 190th Street
Torrance, Ca 90504
t. 310.217.8885
f. 310.217.0425

all ideas, designs and plans represented by this drawing are the exclusive property of the withee malcom partnership, architects, and shall not be reproduced in whole or in part without the express prior written permission of said architects, any unauthorized reuse of these plans other than for the project and location shown is prohibited.

sheet title **door, hardware schedule & details**

sheet **A4-01**

BID SET ONLY

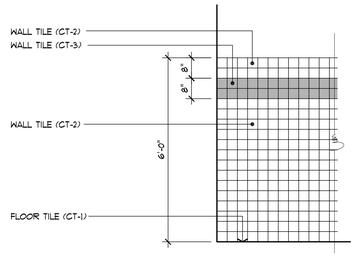

tile elevation at restrooms, typ. — 7
SCALE: 1/2"=1'-0"

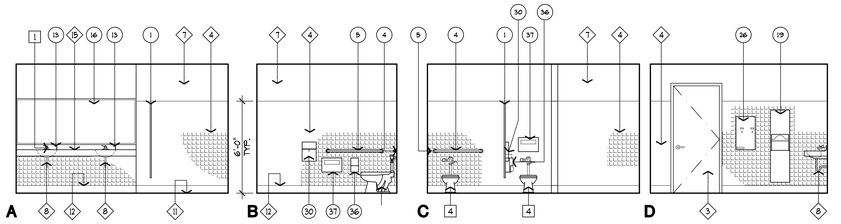

women's restroom 110 elevation — 6
SCALE: 1/4"=1'-0"

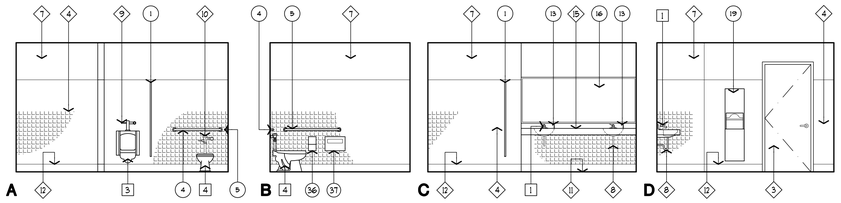

men's restroom 109 elevation — 5
SCALE: 1/4"=1'-0"

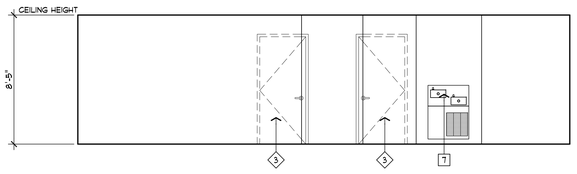

hallway 126 elevation — 4
SCALE: 1/4"=1'-0"

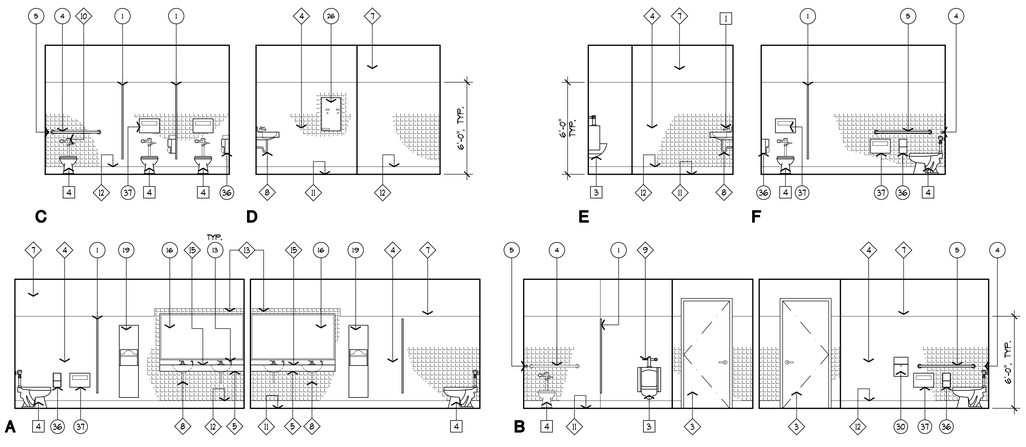

men's 127 and women's 128 interior elevations — 3
SCALE: 1/4"=1'-0"

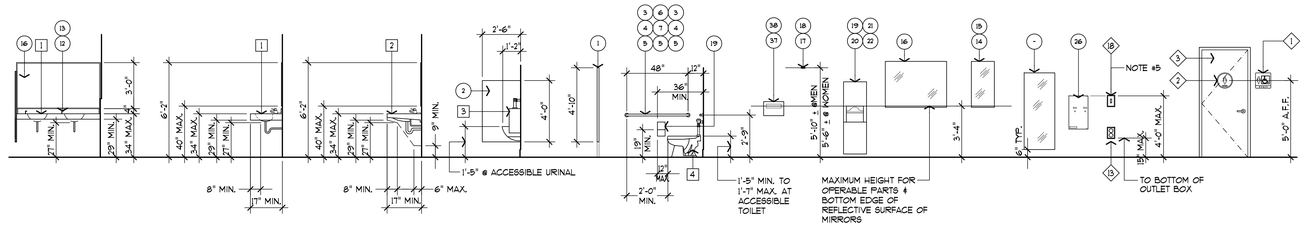

toilet accessory schedule (not all items appear on these dwgs.)

1. TOILET PARTITION - HOOK & BUMPER (MANUFACTURER STANDARD) - SEE FINISH LEGEND FOR SPECIFICATION
2. URINAL SCREEN - SEE FINISH LEGEND FOR SPECIFICATION

GRAB BAR: 1 1/2"ø

3. B-68137 - CORNER 36"X54" - CONCEALED MOUNTING
4. B-6806X36" - REAR OF TOILET - CONCEALED MOUNTING
5. B-6806X42" - SIDE OF TOILET - CONCEALED MOUNTING
6. B-6137 - CORNER 36"x54" - EXPOSED MOUNTING
7. B-6106X36" - REAR OF TOILET - EXPOSED MOUNTING
8. B-6106X42" - SIDE OF TOILET - EXPOSED MOUNTING

GRAB BAR: 1 1/4"ø

9. B-4937 - CORNER 36"X54" - EXPOSED MOUNTING
10. B-490X36" - SIDE OF TOILET - SURFACE MOUNTING
11. B-490X42" - SIDE OF TOILET - EXPOSED MOUNTING

LIQUID SOAP DISPENSER

12. B-8221 - 4" SPOUT LENGTH
13. B-82216 - 6" SPOUT LENGTH

MIRROR

14. B-290 24"X36" MIRROR, W/ STAINLESS STEEL FRAME - SEE ELEVATION
15. B292 - 14"X32" W/ STAINLESS STEEL FRAME AND SHELF - SEE ELEVATION
16. MIRROR ABOVE COUNTER - SEE ELEVATION- VERIFY DIMENSION IN FIELD

ROBE HOOK

17. B-211 - EXPOSED MOUNTING
18. B-2116 - CONCEALED MOUNTING

TOWEL DISPENSERS AND WASTE RECEPTACLES

19. B-3944 IN 4" WALL
20. B-3947 IN 4" WALL
21. B-3900 IN 8" WALL
22. B-43944 - "CONTURA" - IN 4" WALL

PAPER TOWEL DISPENSER

23. B-262 - SURFACE MOUNTED
24. B-359 - RECESSED MOUNTED IN 4" WALL

WASTE RECEPTACLES

25. B-3644 IN 4" WALL

SANITARY NAPKIN/TAMPON VENDOR

26. B-282 25 - SURFACE MOUNTED
27. B-352 25 - RECESSED IN 4" WALL
28. B-43500 - "CONTURA" - RECESSED IN 4" WALL
29. B-435009 - "CONTURA" - SURFACE MOUNTED

SANITARY NAPKIN DISPOSAL

30. B-254 - SURFACE MOUNTED
31. B-353 IN 4" WALL
32. B-354 - SERVICES TWO COMPARTMENTS MOUNTS IN TOILET PARTITION
33. B270 - "CONTURA" - SURFACE MOUNTED
34. B-4354 - "CONTURA" - SERVICES TWO COMPARTMENTS - MOUNTS IN TOILET PARTITION

MULTI-ROLL TOILET TISSUE DISPENSER

35. B-4288 - "CONTURA" - SURFACE MOUNTED
36. B-2888 - SURFACE MOUNTED

TOILET SEAT COVER DISPENSER

37. B-221 - SURFACE MOUNTED
38. B-4221 - "CONTURA" - SURFACE MOUNTED

PARTITION-MOUNTED COMBINATION DISPENSER

39. B-347 - TOILET SEAT COVER & TOILET TISSUE
40. B-357 - TOILET SEAT COVER & TOILET TISSUE DISPENSER, SANITARY NAPKIN DISPOSAL, DOUBLE SIDED, THRU PARTITION

PAPER CUP DISPENSER

41. B-235 - SURFACE MOUNTED

plumbing fixture schedule

1. COUNTER TOP LAVATORY WITH SINGLE HANDLE FAUCET
2. WALL-HUNG LAVATORY WITH SINGLE HANDLE FAUCET
3. WALL HUNG URINAL
4. FLOOR MOUNTED WATER CLOSET- FLUSH VALVE TYPE.
5. FLOOR MOUNTED WATER CLOSET TANK TYPE.
6. WALL HUNG WATER CLOSET
7. DRINKING FOUNTAIN
8. FLOOR DRAIN
9. JANITOR FLOOR SINK
10. WATER HEATER
11. WASH SINK

key notes

1. WALL MOUNTED RESTROOM SIGNAGE. SEE 10/A6-02.
2. DOOR MOUNTED RESTROOM SIGNAGE. SEE 9/A6-02.
3. DOOR PER DOOR SCHEDULE
4. CERAMIC TILE - WAINSCOT (CT-2 & CT-3). SEE DETAIL 7/A5-01.
5. COUNTER TOP AND SPLASH
6. GYP. BD. SOFFIT
7. PAINTED GYP. BD.
8. LAVATORY: INSULATE ALL HOT WATER & WASTE PIPING OCCURRING UNDER THE LAVATORY
9. URINAL: LOCATE FLUSH VALVE CONTROL FOR HANDICAPPED URINAL @ +44" MAX. ABOVE THE FINISHED FLOOR ††
10. TOILET: LOCATE FLUSH VALVE CONTROL FOR HANDICAPPED TOILET ON WIDE SIDE OF STALL
11. CERAMIC TILE FLOOR - (CT-1)
12. 6" HT. COVED CERAMIC TILE BASE - (CT-2)
13. PROVIDE ONE FULL TILE BORDER AROUND ACCESSORY
14. WALL MOUNTED DRINKING FOUNTAIN - HI LOW MODEL. - SEE DETAIL 8/A6-02
15. SOLID SURFACE TOP, APRON & SPLASH. (SS-1.)

notes:

1. REFER TO PLANS AND INTERIOR ELEVATIONS FOR ITEMS USED
2. MOUNT ACCESSORIES PER MANUFACTURERS RECOMMENDED HEIGHTS AND IN ACCORDANCE WITH "A.D.A." AND CALIFORNIA ACCESSIBILITY REQUIREMENTS.
3. FAUCET CONTROL FOR SINK MUST BE OPERABLE WITH ONE HAND WITHOUT REQUIRING TIGHT GRASPING P-1504-C CONTROLS.
4. VERIFY LOCATION OF ELECTRICAL AND PLUMBING AS REQUIRED.
5. LIGHT SWITCHES AND CONVENIENCE OUTLETS MUST COMPLY WITH CBC SECTION 1117B.6.5.1 & 1117B.6.5.2. MOUNT AT 48" MAX. A.F.F. MEASURED FROM THE TOP OF THE OUTLET BOX OR 15" MIN. A.F.F. MEASURED FROM THE BOTTOM OF THE OUTLET BOX.
6. MOUNT ABOVE COUNTER ELECTRICAL OUTLETS HORIZONTALLY (TYP.).
7. SEE FINISH SCHEDULE FOR MATERIAL A2-04. SPECIFICATIONS- SHEET

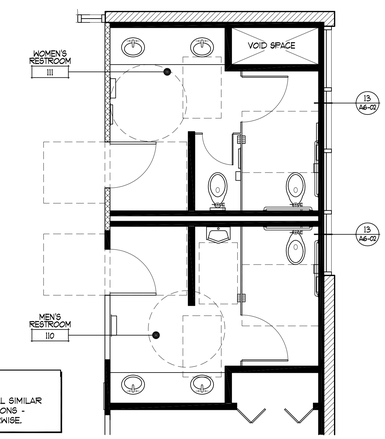

note:
SEE DETAIL 2 FOR ALL SIMILAR INFORMATION/CONDITIONS - UNLESS NOTED OTHERWISE.

alternate enlarged restroom 110 & 111 floor plan — 2A
SCALE: 1/4"=1'-0"

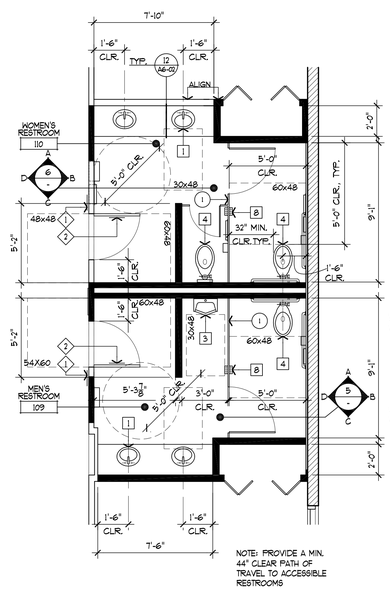

enlarged restroom 109 & 110 floor plan — 2
SCALE: 1/4"=1'-0"

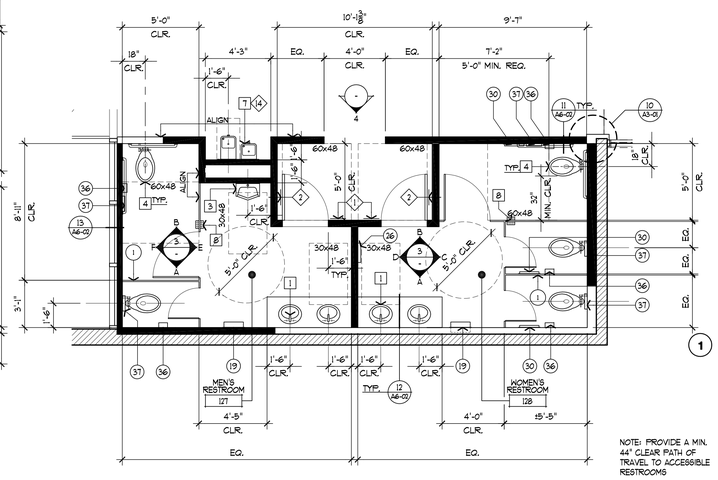

enlarged restroom 127 & 128 floor plan — 1
SCALE: 1/4"=1'-0"

note:
ALL CONDITIONS INDICATED ARE EXISTING UNLESS NOTED OTHERWISE.

scale: 1/4" = 1'-0"
0 4 8 12 16

NORTH

W:\DWGS\A9041.109\A9041.109.50 CD\A9041.109.51-DWG\A5-01-A9041109-P.dwg, 10/26/2012 2:44:51 PM, tnguyen

job no.	A9041.109-P
drawn	
submittal	
Plan Check Submittal	03.27.2012
Plan Check Re-Submittal	10.29.2012
Issue For Bid	10.29.2012
revision	

all ideas, designs and plans represented by this drawing are the exclusive property of the withee malcom partnership, architects, and shall not be reproduced in whole or in part without the express prior written permission of said architects, any unauthorized reuse of these plans other than for the project and location shown is prohibited.

Tenant Improvements / Accessibility Upgrades for ;
CITY OF TORRANCE
PERSONNEL BUILDING
3231 Torrance Boulevard, Torrance, CA 90503

OWNER : City of Torrance, Department of General Services
3350 Civic Center Drive, Torrance, CA 90503

WITHEE MALCOLM ARCHITECTS, LLP
2251 W. 190th Street
Torrance, Ca 90504
t. 310.217.8885
f. 310.217.0425

sheet title: **enlarged restroom plans & elevations**

sheet **A5-01**

BID SET ONLY

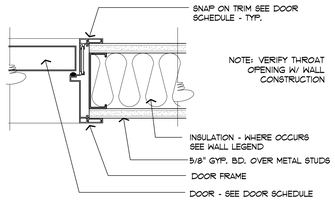

door jamb at wall (head sim) **16**
SCALE: 3"=1'-0"

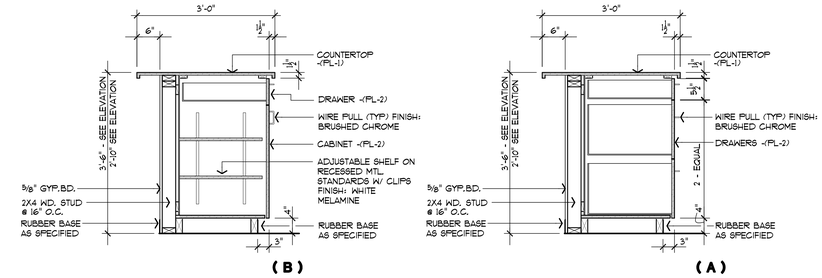

section **4**
SCALE: 3/4"=1'-0"

CABINETRY NOTES:

1) ALL INTERIOR EXPOSED SURFACES TO BE WHITE MELAMINE.
2) ALL EXTERIOR EXPOSED SURFACES TO BE PLASTIC LAMINATE, U.N.O.
3) ALL DRAWERS & CABINETS TO RECEIVE 4" WIRE PULLS 626 FINISH
4) WHEELCHAIR ACCESS CABINET DOORS AND BASE ON 135 DEG. HINGES TO ALLOW FULL HANDICAP ACCESS AT SINK. NO BASE @ SINK CABINETS-TYP. TOE KICK ATTACHED TO DOOR. FLOOR FINISH TO CONTINUE UNDER SINK COMPARTMENT.
5) DENOTES FINISH MATERIAL. SEE FINISH PLANS SHEETS A2-04 FOR SPECIFICATION.
6) PROVIDE 1/4" COPPER COLD WATER LINE AT COUNTER FOR COFFEE MAKER & AT REFRIGERATOR FOR ICE MAKER
7) PROVIDE SCHEDULED BASE AT CABINETS, U.N.O.
8) ALL ADJUSTABLE SHELVES TO BE ON RECESSED METAL STANDARDS WITH CLIPS
9) ALL OPEN SHELVES TO BE PLASTIC LAMINATE
10) ALL WALL TO WALL, CEILING & SOFFIT DIMENSIONS ARE TO BE VERIFIED IN FIELD

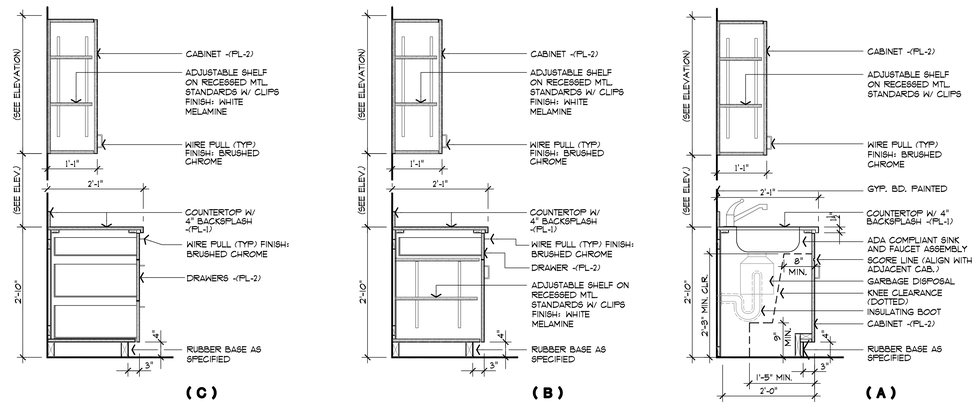

section **3**
SCALE: 3/4"=1'-0"

not used **20**
SCALE: none

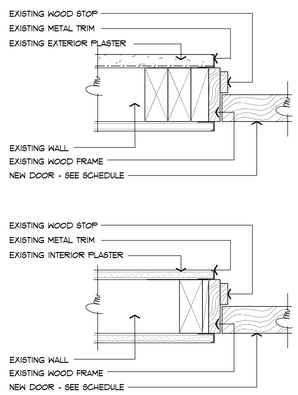

typical existing interior door jamb/head detail **19**
SCALE: none
REFERENCE ONLY

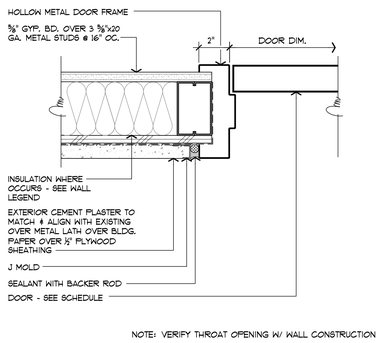

exterior hollow metal door jamb (head similar) **15**
SCALE: 3"=1'-0"
T-DOOR2 (4)

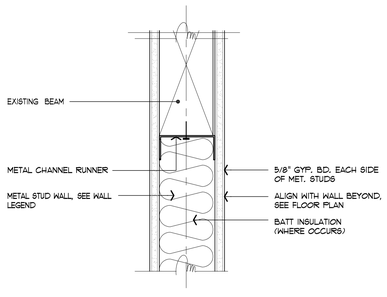

new wall to existing beam top connection **18**
SCALE: 3"=1'-0"

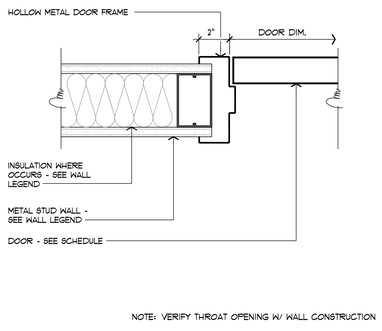

interior hollow metal door jamb (head similar) **14**
SCALE: 3"=1'-0"

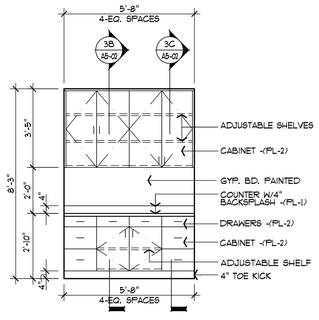

alternate conference room #109 **10**
SCALE: 3/8"=1'-0"

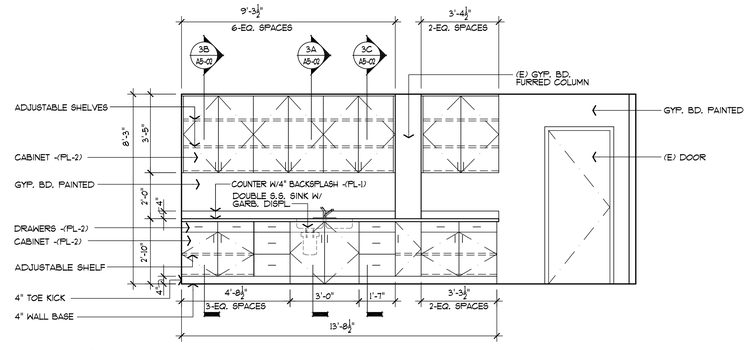

new lunch room #118 **2**
SCALE: 3/8"=1'-0"

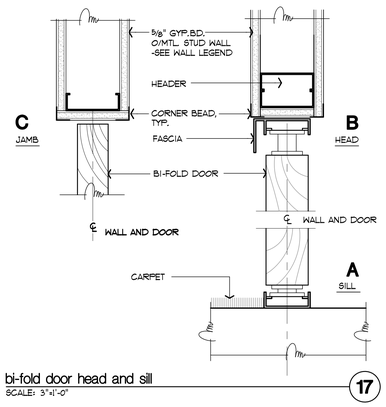

bi-fold door head and sill **17**
SCALE: 3"=1'-0"

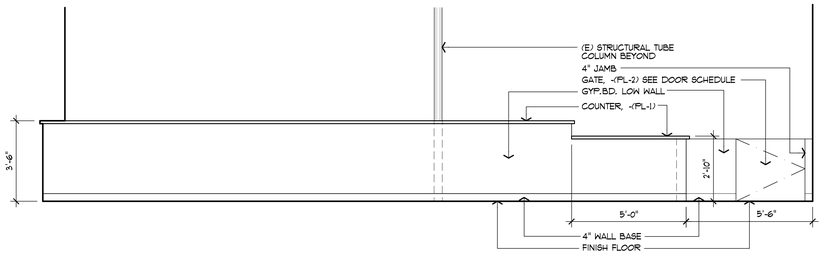

lobby #101 **(B)**

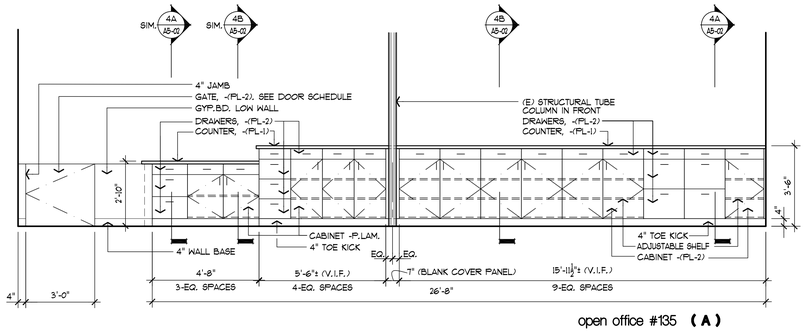

open office #135 **(A)**

Lobby #101 / Open Office #135 **1**
SCALE: 3/8"=1'-0"

job no.	A9041109-P
drawn	
submittal	
Plan Check Submittal	03.27.2012
Plan Check Re-Submittal	10.29.2012
Issue For Bid	10.29.2012
revision	

all ideas, designs and plans represented by this drawing are the exclusive property of the withee malcolm partnership, architects, and shall not be reproduced in whole or in part without the express prior written permission of said architects, any unauthorized reuse of these plans other than for the project and location shown is prohibited.

Tenant Improvements / Accessibility Upgrades for :
CITY OF TORRANCE
PERSONNEL BUILDING
3231 Torrance Boulevard, Torrance, CA 90503

OWNER : City of Torrance, Department of General Services
3350 Civic Center Drive, Torrance, CA 90503

WITHEE MALCOLM ARCHITECTS, LLP
2251 W. 190th Street
Torrance, Ca 90504
t. 310.217.8885
f. 310.217.0425

sheet title **cabinet elevations & sections**

sheet **A5-02**

BID SET ONLY

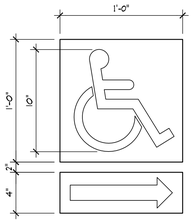

COLOR NOTES:

1. COLOR & CONTRAST OF THE IDENTIFICATION SYMBOLS SHALL BE DISTINCTLY DIFFERENT FROM COLOR & CONTRAST OF DOOR.

SIGN NOTES:

1. IDENTIFICATION SYMBOLS SHALL BE PER 2007 CBC SECTION 1115B.5 AND 1117B.5.1
2. CENTERLINE OF SIGN SHALL BE 12" FROM THE LATCH SIDE OF DOOR
3. CENTERLINE OF SIGN SHALL BE + 5'-0" ABOVE FINISH FLOOR.
4. REFER TO DRAWINGS FOR SIGN LOCATIONS

directional sign
SCALE: 1"=1'-0" — 16

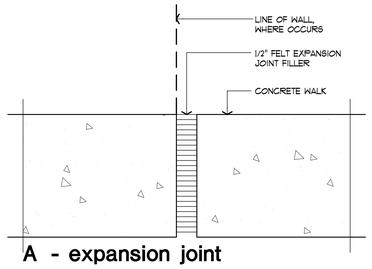

A - expansion joint

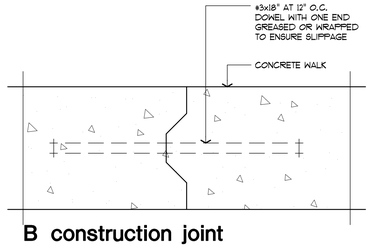

B construction joint

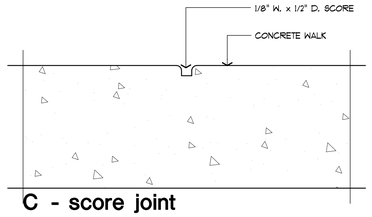

C - score joint

concrete joint
SCALE : 3" = 1'-0" T-SITE05 (4) — 12

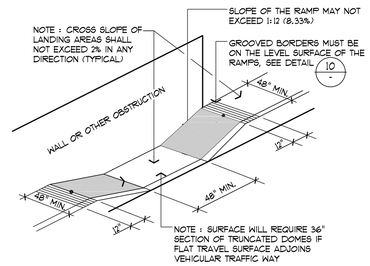

curb cut ramp
N.T.S. T-SITE07 (4) — 9

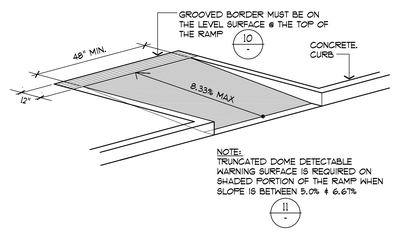

curb cut ramp
N.T.S. T-SITE06 (4) — 8

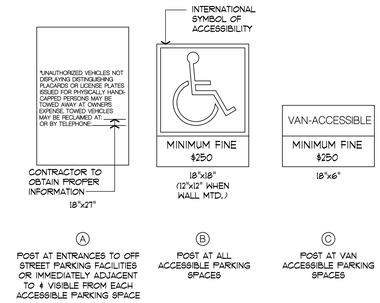

sign type & text
SCALE: N.T.S. — 5

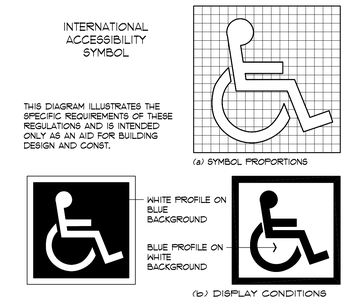

international accessibility symbol
SCALE: 1 1/2"=1'-0" — 3

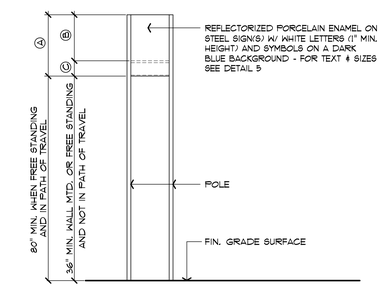

accessibility signage
SCALE: 1/2"=1'-0" — 4

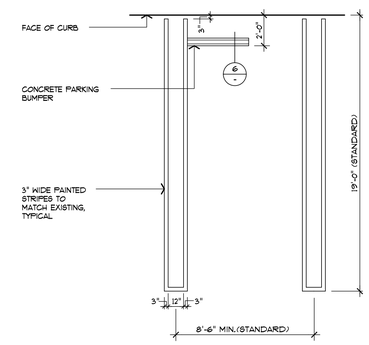

parking space striping
SCALE: 1/4"=1'-0" — 2

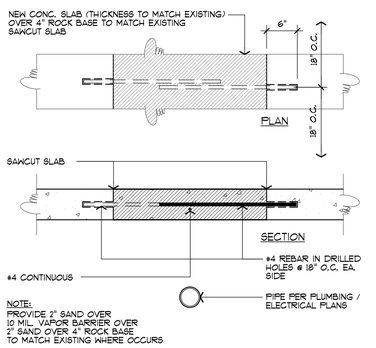

typical slab patch
SCALE: 1"=1'-0" — 15

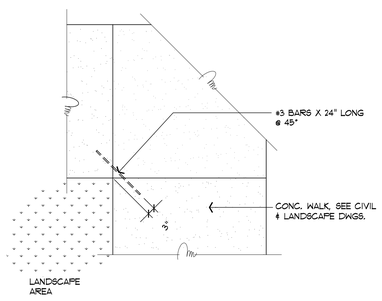

typical dowel @ conc. walk corner
SCALE: 1/2"=1'-0" — 14

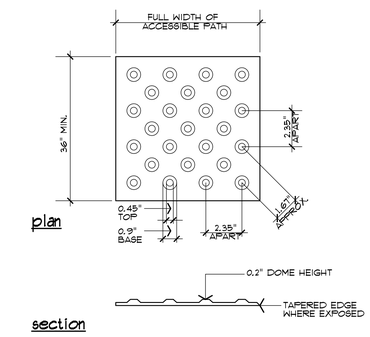

truncated domes
SCALE: 3"=1'-0" — 11

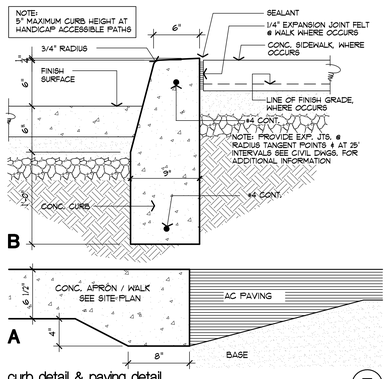

curb detail & paving detail
SCALE: 1 1/2"=1'-0" T-SITE11 (8) — 7

NOTE: SCORE JOINTS (1/8" W.x1/2" D.)
- SEE PLAN FOR LOCATION

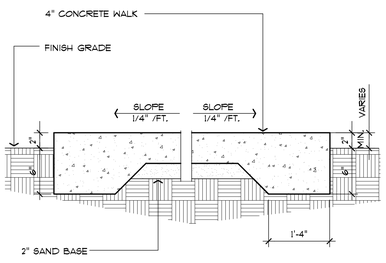

concrete walk
SCALE: 3/4"=1'-0" T-SITE01 (16) — 13

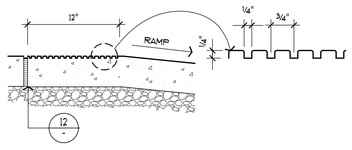

grooved border
N.T.S. — 10

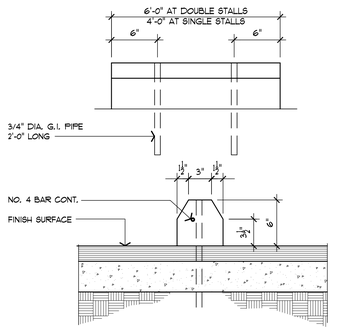

concrete wheel stop
SCALE: 1 1/2"=1'-0" T-SITE10 (8) — 6

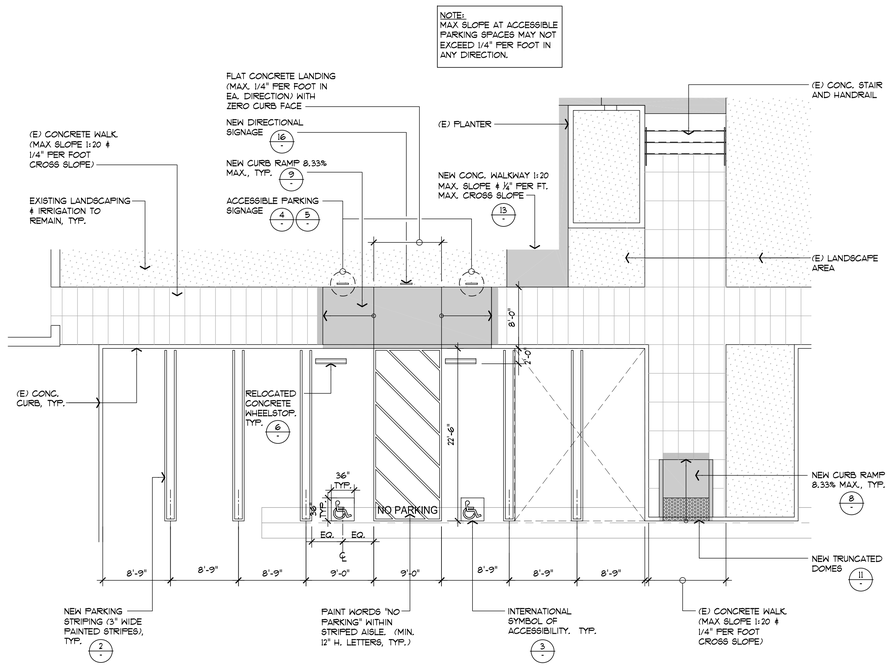

enlarged accessible parking plan
SCALE: 1/4"=1'-0" — 1

job no.	A9041109-P
drawn	
submittal	
Plan Check Submittal	03.27.2012
Plan Check Re-Submittal	10.29.2012
Issue For Bid	10.29.2012
revision	

Tenant Improvements / Accessibility Upgrades for :
CITY OF TORRANCE
PERSONNEL BUILDING
3231 Torrance Boulevard, Torrance, CA 90503

OWNER : City of Torrance, Department of General Services
3350 Civic Center Drive, Torrance, CA 90503

WITHEE MALCOLM ARCHITECTS, LLP
2251 W. 190th Street
Torrance, Ca 90504
t. 310.217.8885
f. 310.217.0425

all ideas, designs and plans represented by this drawing are the exclusive property of the withee malcolm partnership, architects, and shall not be reproduced in whole or in part without the express prior written permission of said architects, any unauthorized reuse of these plans other than for the project and location shown is prohibited.

sheet title **site details**

sheet **A6-01**

BID SET ONLY

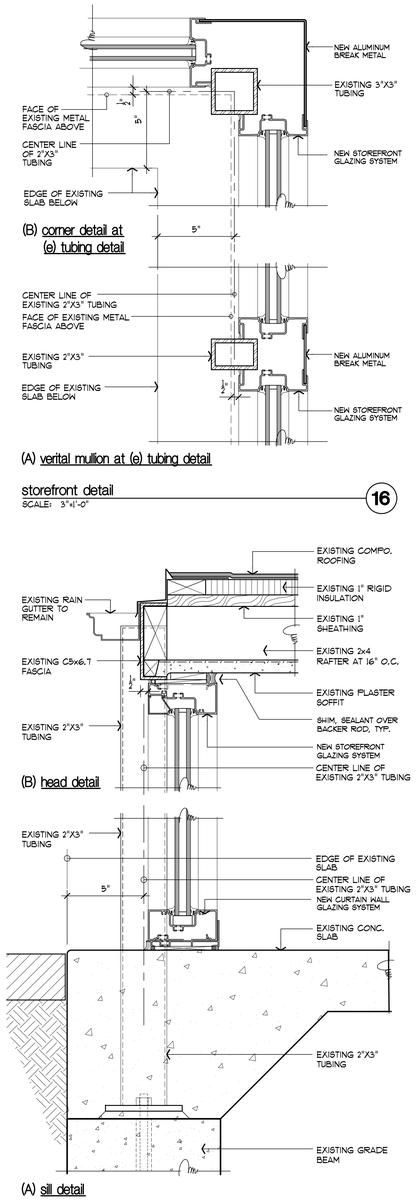

storefront detail
SCALE: 3"=1'-0"
16

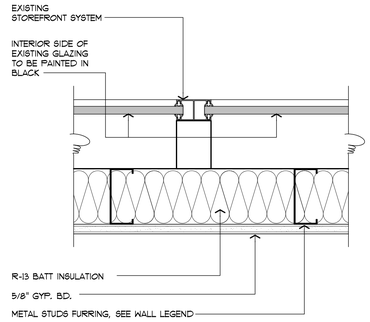

furring over existing storefront
SCALE: 3"=1'-0"
13

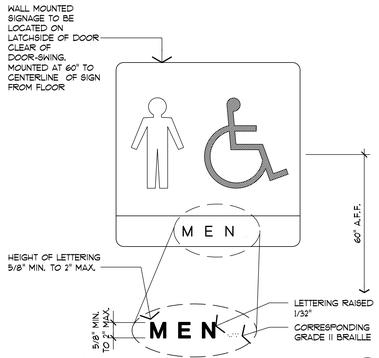

wall mounted restroom identification symbols
SCALE: 3"=1'-0"
10

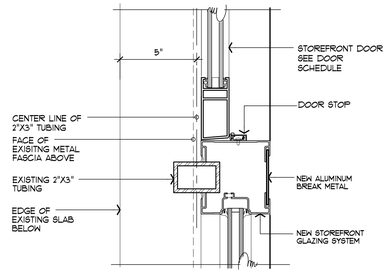

jamb at (e) tubing detail
SCALE: 3"=1'-0"
6

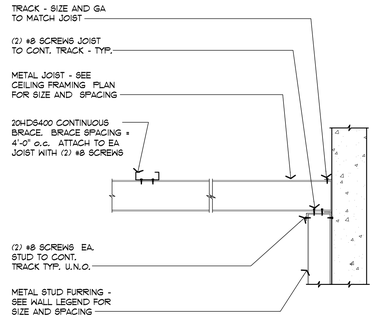

joist to metal stud
SCALE: 3/4"=1'-0"
4

storefront detail
SCALE: 3"=1'-0"
15

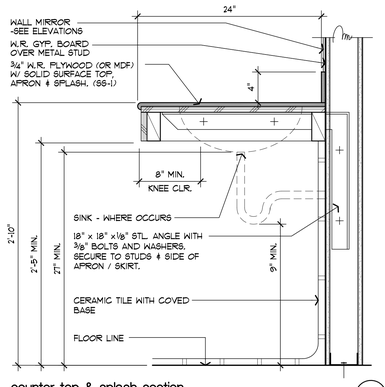

counter top & splash section
SCALE: 1 1/2"=1'-0"
12

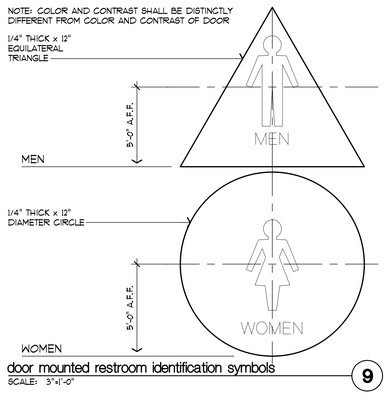

door mounted restroom identification symbols
SCALE: 3"=1'-0"
9

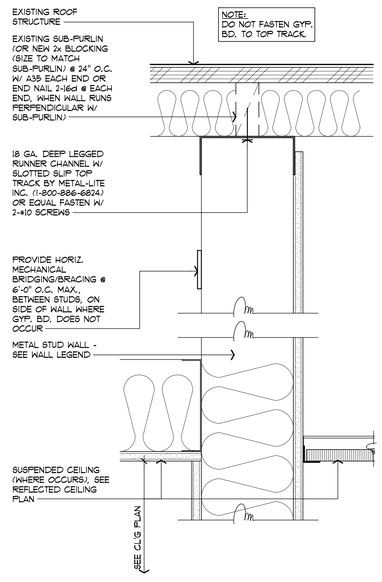

full height wall
SCALE: 3"=1'-0"
5.5

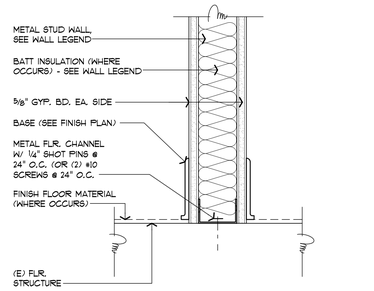

wall at base, typ
SCALE: 3"=1'-0"
3

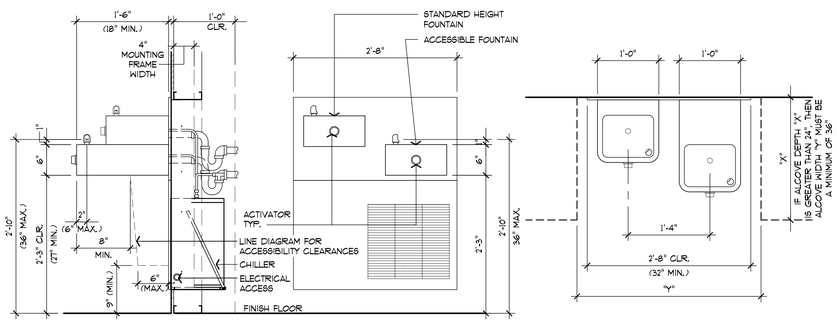

handicapped accessible drinking fountain - "hi-lo" fountain design
SCALE: 1"=1'-0"
8

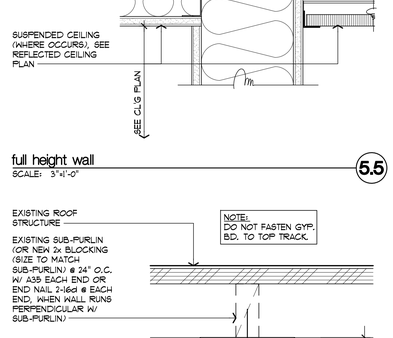

full height wall
SCALE: 3"=1'-0"
5

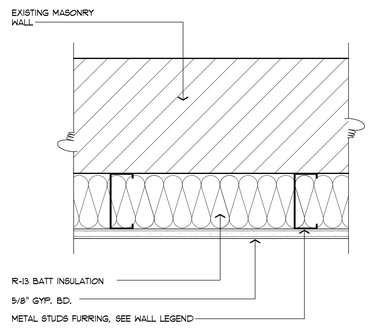

furring over existing wall
SCALE: 3"=1'-0"
2

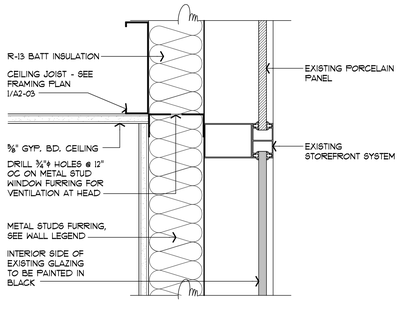

window wall ventilation detail
SCALE: 3"=1'-0"
14

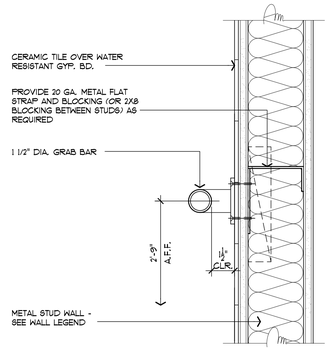

grab bar
SCALE: 3"=1'-0"
11

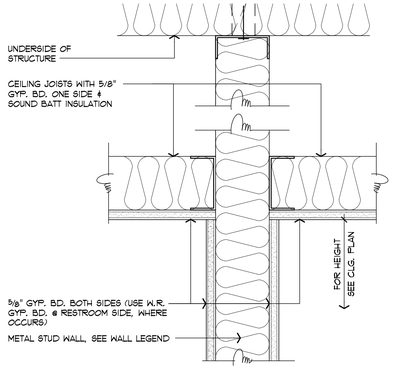

wall @ gyp. bd. ceiling
SCALE: 3"=1'-0"
7

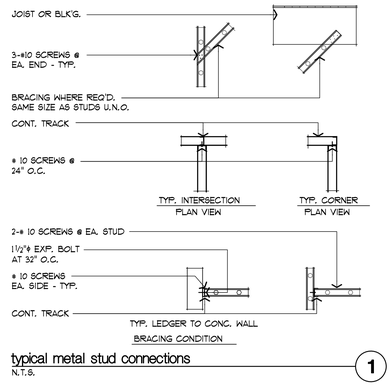

typical metal stud connections
N.T.S.
1

job no.	A9041109-P
drawn	
submittal	
Plan Check Submittal	03.27.2012
Plan Check Re-Submittal	10.29.2012
Issue For Bid	10.29.2012
revision	

all ideas, designs and plans represented by this drawing are the exclusive property of the withee malcolm partnership, architects, and shall not be reproduced in whole or in part without the express prior written permission of said architects, any unauthorized reuse of these plans other than for the project and location shown is prohibited.

Tenant Improvements / Accessibility Upgrades for ;
CITY OF TORRANCE
PERSONNEL BUILDING
3231 Torrance Boulevard, Torrance, CA 90503

OWNER : City of Torrance, Department of General Services
3350 Civic Center Drive, Torrance, CA 90503

WITHEE MALCOLM ARCHITECTS, LLP
2251 W. 190th Street
Torrance, Ca 90504
t. 310.217.8885
f. 310.217.0425

sheet title **details**

sheet **A6-02**

BID SET ONLY

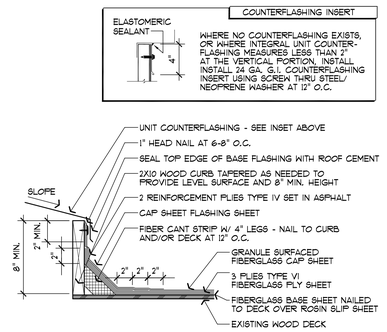

typical equipment curb 12
SCALE: 1 1/2"=1'-0"

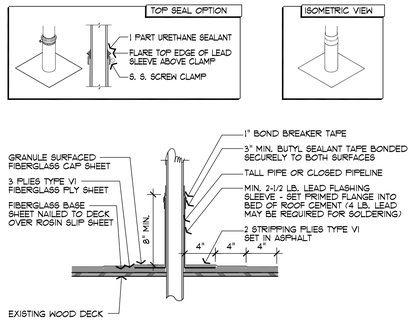

sealed pipe flashing 8
SCALE: 1 1/2"=1'-0"

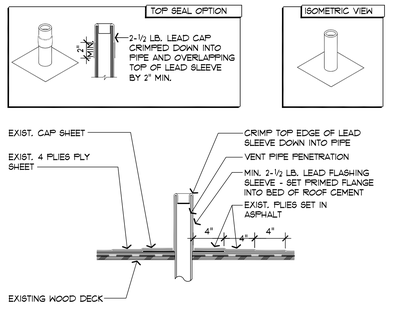

vent pipe flashing 7
SCALE: 1 1/2"=1'-0" C-ROOF13 (8)

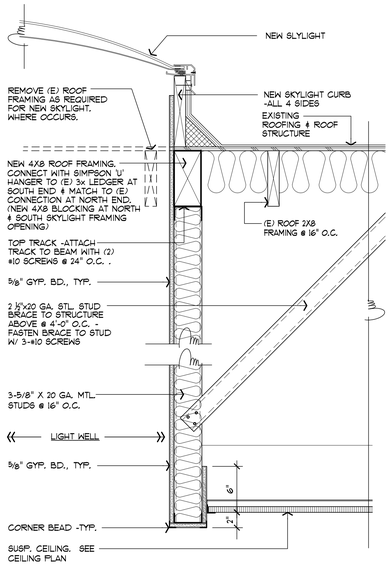

new light well at skylight framing 10
SCALE: 1 1/2"=1'-0"

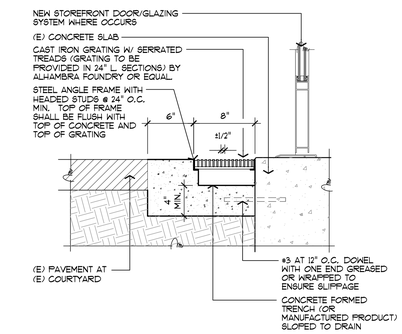

new exterior trench drain 6
SCALE : 1-1/2" = 1'-0"

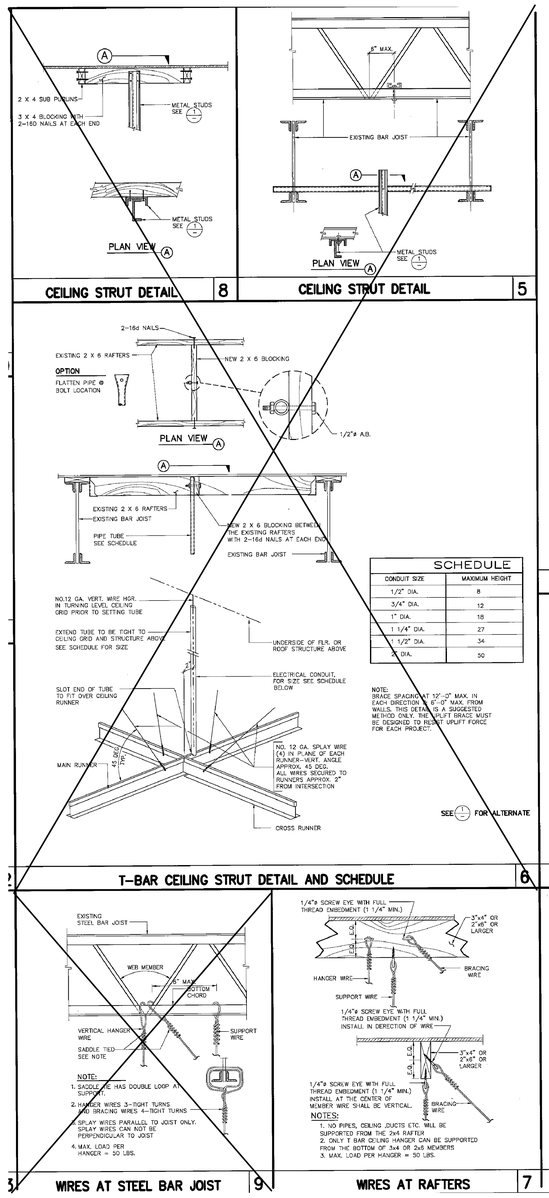

SCHEDULE	
CONDUIT SIZE	MAXIMUM HEIGHT
1/2" DIA.	8
3/4" DIA.	12
1" DIA.	16
1 1/4" DIA.	27
1 1/2" DIA.	34
2" DIA.	50

NOTE:
BRACE SPACING AT 12'-0" MAX. IN EACH DIRECTION & 8'-0" MAX. FROM WALLS. THIS DETAIL IS A SUGGESTED METHOD ONLY. THE UPLIFT BRACE MUST BE DESIGNED TO RESIST UPLIFT FORCE FOR EACH PROJECT.

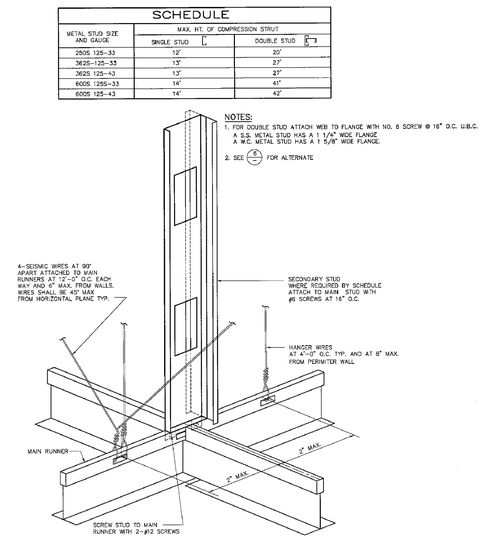

suspended ceiling detail 2
SCALE: N.T.S.

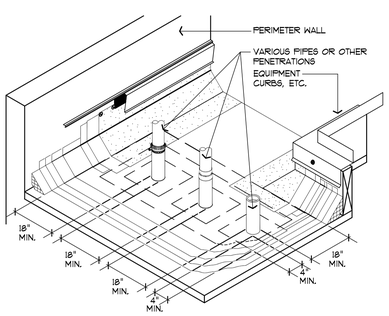

minimum clearances 9
NO SCALE C-ROOF02 (32)

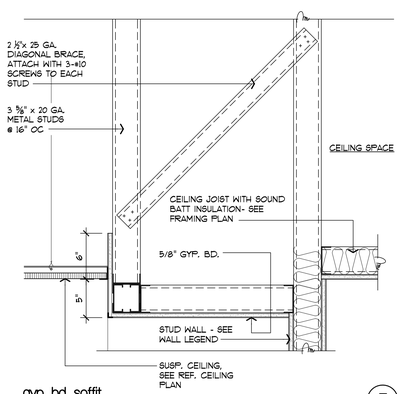

gyp. bd. soffit 5
SCALE: 1 1/2"=1'-0"

IN ROOMS WITH A SPAN IN BOTH DIRECTIONS OF MORE THAN 25', A MINIMUM WALL ANGLE SIZE OF AT LEAST 2" HORIZONTAL LEG SHALL BE USED AT PERIMETER WALLS AND INTERIOR FULL HEIGHT PARTITIONS. THE FIRST TILE SHALL BE 3/4" CLEAR FROM WALL SURFACE. SEE PLAN FOR APPLICABLE CONDITIONS.

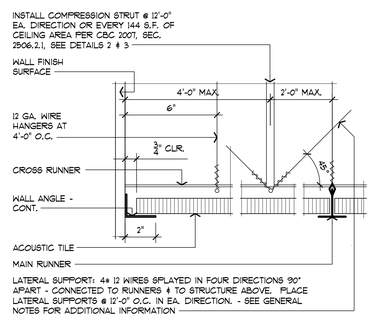

ceiling detail 4
SCALE: 3"=1'-0" T-CEIL02 (4)

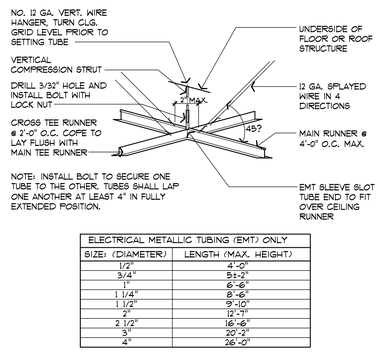

ELECTRICAL METALLIC TUBING (EMT) ONLY	
SIZE: (DIAMETER)	LENGTH (MAX. HEIGHT)
1/2"	4'-0"
3/4"	5'-2"
1"	6'-6"
1 1/4"	8'-6"
1 1/2"	9'-10"
2"	12'-7"
2 1/2"	16'-6"
3"	20'-2"
4"	26'-0"

suspended ceiling detail 3
SCALE: N. T. S.

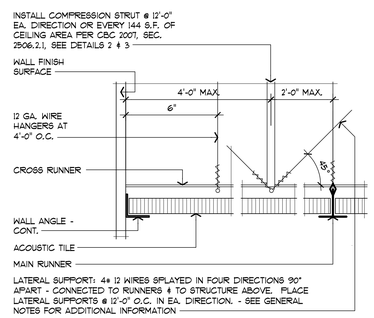

ceiling detail 1
SCALE: 3"=1'-0" T-CEIL02 (4)

job no.	A9041.109-P
drawn	
submittal	
Plan Check Submittal	03.27.2012
Plan Check Re-Submittal	10.29.2012
Issue For Bid	10.29.2012
revision	

all ideas, designs and plans represented by this drawing are the exclusive property of the withee malcolm partnership, architects, and shall not be reproduced in whole or in part without the express prior written permission of said architects, any unauthorized reuse of these plans other than for the project and location shown is prohibited.

Tenant Improvements / Accessibility Upgrades for ;
CITY OF TORRANCE
PERSONNEL BUILDING
3231 Torrance Boulevard, Torrance, CA 90503

OWNER : City of Torrance, Department of General Services
3350 Civic Center Drive, Torrance, CA 90503

WITHEE MALCOLM ARCHITECTS, LLP
2251 W. 190th Street
Torrance, Ca 90504
t. 310.217.8885
f. 310.217.0425

sheet title **details**
sheet **A6-03**

BID SET ONLY

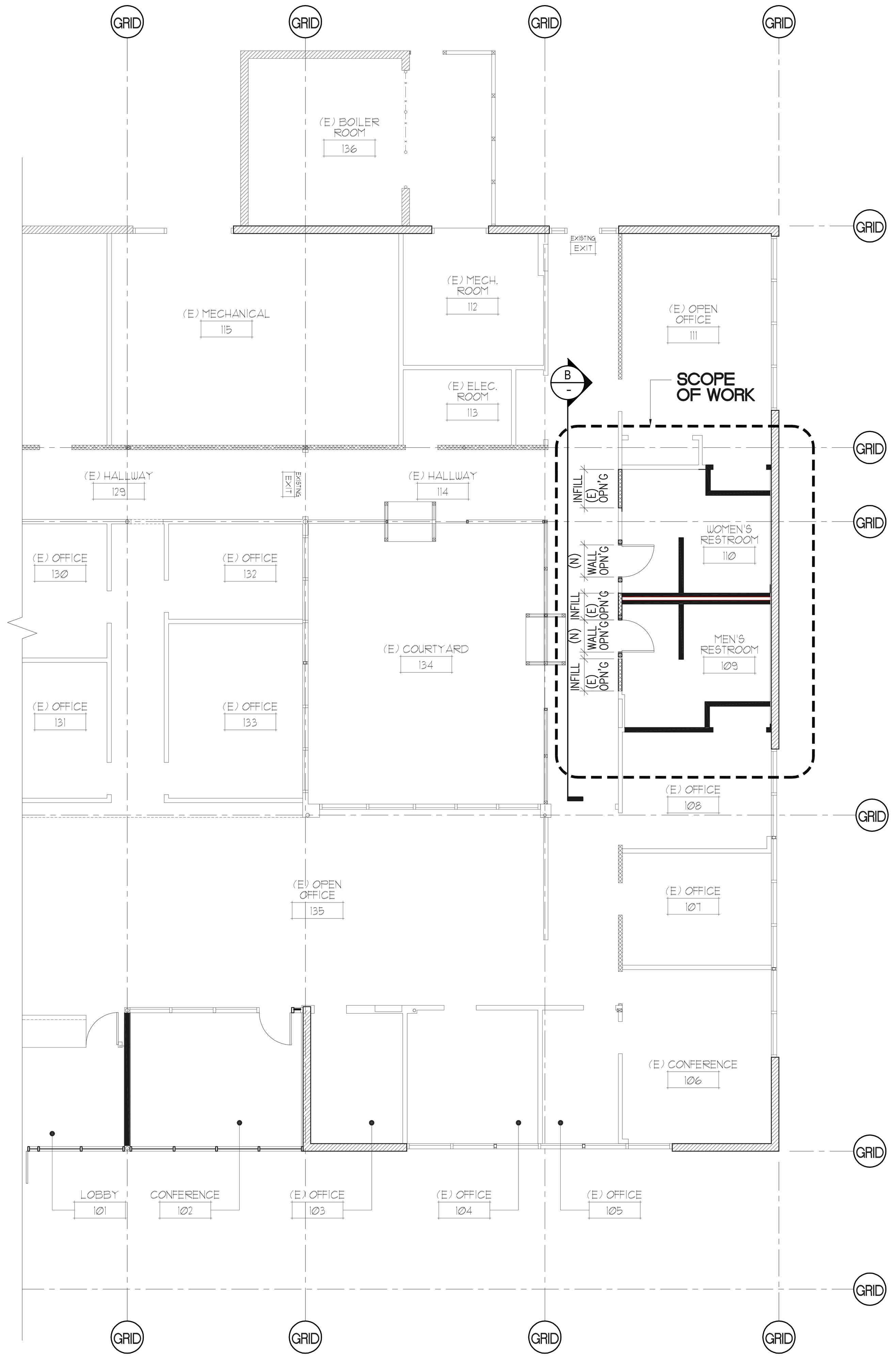

OVERALL FLOOR PLAN (A)

SCALE: 1/8"=1'-0"

NORTH

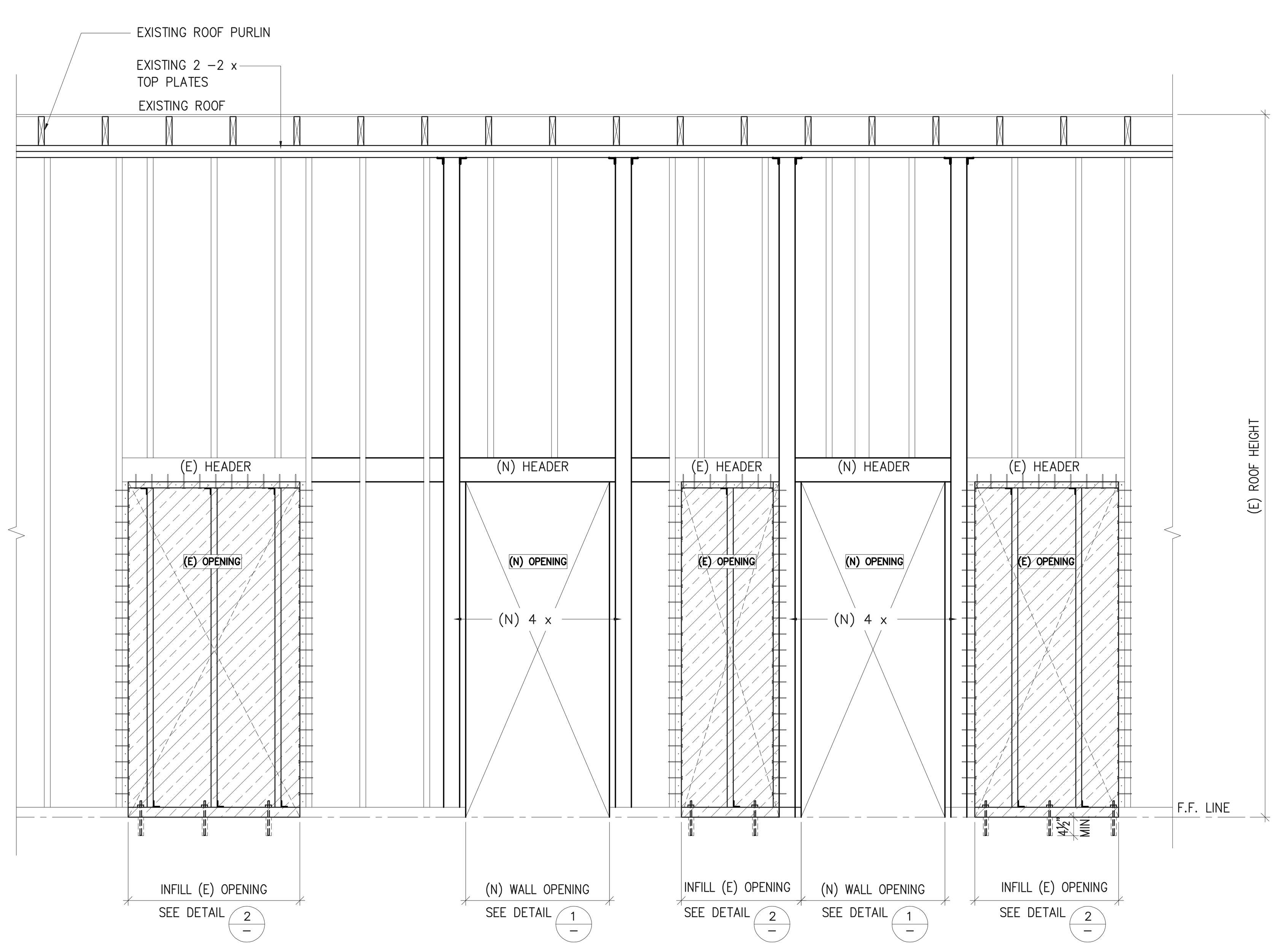

PARTIAL WALL ELEVATIONS (B)

SCALE: 1/2"=1'-0"

GENERAL NOTES

1. ALL MATERIALS AND WORKMANSHIP SHALL CONFORM TO THE DRAWINGS AND THE SPECIFICATIONS.
2. THE CONTRACTOR SHALL BE RESPONSIBLE FOR COORDINATING THE WORK OF ALL TRADES AND SHALL CHECK ALL DIMENSIONS AND EXISTING CONDITIONS. ANY INCONSISTENCIES OR DISCREPANCIES SHALL BE CALLED TO THE ATTENTION OF THE ENGINEER/ARCHITECT AND BE RESOLVED BEFORE PROCEEDING WITH ANY WORK
3. THE STRUCTURAL DRAWINGS REPRESENT THE FINISHED STRUCTURE. THEY DO NOT INDICATE THE METHOD OF CONSTRUCTION. THE CONTRACTOR SHALL TAKE ALL MEASURES NECESSARY TO PROTECT THE STRUCTURE DURING CONSTRUCTION. SUCH MEASURES SHALL INCLUDE, BUT NOT BE LIMITED TO, BRACING AND SHORING FOR LOADS DUE TO CONSTRUCTION EQUIPMENT, CONSTRUCTION LOADS OF MATERIALS AND ETC. CONTRACTOR AT HIS OWN SHALL ENGAGE PROPERLY QUALIFIED PERSONS TO DETERMINE FIELD LAYOUT OF THE BUILDING FOR PROPER ALIGNMENT OF THE STRUCTURE AND ITS ELEMENTS. THIS SHALL INCLUDE ANY NECESSARY PRELOADING OF THE STRUCTURE TO DETERMINE FINAL POSITION OF THE COMPLETED WORK.
4. CONSTRUCTION MATERIALS SHALL BE SPREAD OUT IF PLACED ON FRAMED FLOORS AND ROOFS. LOADS SHALL NOT EXCEED DESIGN LOADING FOR SUPPORTING MEMBERS.
5. THE CONTRACTOR SHALL IMMEDIATELY NOTIFY THE STRUCTURAL ENGINEER OF ANY CONDITION WHICH MIGHT ENDANGER THE STABILITY OF THE STRUCTURE OR CAUSE DISTRESS OF THE STRUCTURE.
6. ALL WORK SHALL CONFORM TO THE MINIMUM STANDARDS OF THE LATEST EDITION OF THE C.B.C. AND SUCH OTHER REGULATING AGENCIES EXERCISING AUTHORITY OVER ANY PORTION OF THIS WORK.
7. THE WORK SHALL CONFORM TO THE BEST PRACTICE PREVAILING IN THE VARIOUS TRADES COMPRISING THE WORK.
8. ALL A.S.T.M. DESIGNATIONS SHALL BE AS AMENDED TO DATE.
9. TYPICAL DETAILS AND GENERAL NOTES ON THIS SHEET APPLY TO ALL PARTS OF THE JOB, EXCEPT WHERE THEY CONTRADICT WITH DETAILS AND NOTES ON OTHER SHEETS. WHERE CONDITIONS ARE NOT SPECIFICALLY INDICATED BUT ARE SIMILAR CHARACTER TO DETAILS OF CONSTRUCTION SHALL BE USED, SUBJECT TO REVIEW BY THE ENGINEER.
10. OBSERVATION VISITS TO THE SITE BY THE STRUCTURAL ENGINEER SHALL NOT INCLUDE OBSERVATION OF SAFETY METHODS, BRACING OR SUPPORT.
11. DIMENSIONS SHALL TAKE PRECEDENCE OVER SCALES SHOWN ON DRAWINGS. DO NOT SCALE DETAILS.
12. SEE ARCHITECTURAL DRAWINGS FOR SIZE AND LOCATION OF ALL DOOR AND WINDOW OPENINGS, SIZE AND LOCATION OF ALL NON- BEARING PARTITIONS, SIZE AND LOCATION OF ALL CONCRETE CURBS, FLOOR DRAINS, DEPRESSED AREAS, LEVEL CHANGES, CHAMFERS, GROOVES, INSERTS, SIZE AND LOCATION OF ALL FLOOR AND ROOF OPENINGS NOT DETAILED AND ALL FINISHES.
13. SEE MECHANICAL, PLUMBING, AND ELECTRICAL DRAWINGS FOR PIPE RUNS, SLEEVES, HANGERS, TRENCHES, WALL AND SLAB OPENINGS, ELECTRICAL CONDUIT RUNS AND BOXES, OUTLETS, EQUIPMENT BASES ANCHOR BOLTS FOR MOTORS AND EQUIPMENT.
14. SHOP DRAWINGS REQUIRED BY THE SPECIFICATIONS SHALL BE SUBMITTED TO THE ENGINEER FOR REVIEW PRIOR TO FABRICATION. ALLOW MINIMUM TWO WEEKS FOR REVIEW BY THE ENGINEER.
15. ALL INFORMATION SHOWN ON THE DRAWING RELATIVE TO EXISTING CONDITIONS IS GIVEN AS BEST AS POSSIBLE, BUT WITHOUT GUARANTEE OF ACCURACY. WHERE ACTUAL CONDITIONS CONFLICT WITH THE DRAWINGS, THEY SHALL BE REPORTED TO THE ENGINEER SO THAT THE PROPER REVISIONS MAY BE MADE. MODIFICATIONS OF DETAILS OF CONSTRUCTION SHALL NOT BE MADE WITHOUT WRITTEN APPROVAL OF THE ENGINEER.

STRUCTURAL LUMBER:

1. ALL STRUCTURAL LUMBER SHALL BE DOUGLAS FIR COAST REGION AND SHALL BE IDENTIFIED AS REQUIRED BY PS 20–70 BY A GRADE MARK OF A LUMBER GRADING AGENCY APPROVED BY THE BOARD OF REVIEW OF THE AMERICAN LUMBER STANDARDS COMMITTEE.
2. ALL FRAMING MEMBERS SHALL BE AS FOLLOWS EXCEPT AS NOTED.

HORIZONTAL MEMBERS	
SUB–PURLINS (STIFFENERS)	D.F. #1
JOISTS AND BEAMS	D.F. #1
VERTICAL MEMBERS	
POSTS AND COLUMNS	D.F. #1
2x4 STUDS	STD. OR BETTER
2x6 STUDS	D.F. #2

3. SILL PLATES IN CONTACT WITH CONCRETE OR MASONRY SHALL BE PRESSURE TREATED DOUGLAS FIR.
4. FRAMING ANCHORS, HANGERS, STRAPS, COLUMN CAPS AND BASES AND HOLDOWNS SHOWN ARE AS MANUFACTURED BY SIMPSON COMPANY, BREA, CA. DESIGNATIONS SHOWN ON THE DRAWINGS ARE FROM SIMPSON CATALOGUE C–92H–1 OR LATEST EDITION.
5. PLYWOOD SHALL CONFORM TO THE STANDARDS IN PS 1–74 OR PS 1–83. ALL PANELS TO BE IDENTIFIED WITH A GRADE MARK OF AN APPROVED TESTING AND GRADING AGENCY. EXTERIOR GLUE SHALL BE USED. NAILING OF PLYWOOD SHALL BE APPROVED PRIOR TO COVERING PLYWOOD.
6. DO NOT NOTCH JOISTS, RAFTERS OR BEAMS EXCEPT WHERE SHOWN ON THE DETAILS. HOLES THROUGH SILLS, PLATES, STUDS AND DOUBLE PLATES IN WALLS SHALL NOT EXCEED 1/3 OF THE PLATE WIDTH. USE BORED HOLES LOCATED IN CENTER OF MEMBER OR USE METAL STRAP ON NEAR SIDE. NO HOLES PERMITTED IN STUDS, SILL PLATES OR TOP PLATES OF SHEAR PANELS WITHOUT EXPRESSED APPROVAL.
7. BOLTS IN WOOD SHALL BE NOT LESS THAN 7 BOLT DIAMETERS FROM ENDS AND 4 BOLT DIAMETERS FROM EDGES UNLESS NOTED. BOLT HOLES SHALL BE 1/32" LARGER IN DIAMETER THAN THE BOLT SIZE
8. LAG BOLTS SHALL HAVE LEAD HOLES BORED. HOLE DIAMETER TO BE:
   A. SHANK PORTION: SAME DIAMETER AND LENGTH AS SHANK.
   B. THREADED PORTION: 0.6–0.75 TIMES DIAMETER OF THREAD.
9. HOLES FOR NAILS, WHERE NECESSARY TO PREVENT SPLITTING SHALL BE PREDRILLED AT A SMALLER DIAMETER THAN NAIL.
10. EXPOSED EXTERIOR NAILS AND HARDWARE SHALL BE GALVANIZED.
11. USE MALLEABLE IRON WASHERS UNDER EXPOSED EXTERIOR BOLT HEADS AND NUTS. MALLEABLE WASHERS TO HAVE A DIAMETER 4 TIMES BOLT DIAMETER AND THICKNESS 1/2 BOLT DIAMETER.

EPOXY WORK:

1. ALL ANCHORS TO BE A307 ALL THREAD BOLTS WITH MIN. EMBEDMENT AS SPECIFIED PER DETAIL. USE HILTI HIT–RE 500–SD (ESR–2322) OR APPROVED EQUAL
2. ALL THE EPOXY WORK WILL REQUIRE SPECIAL INSPECTION BY A CITY APPROVED DEPUTY INSPECTOR.

STRUCTURAL NOTES

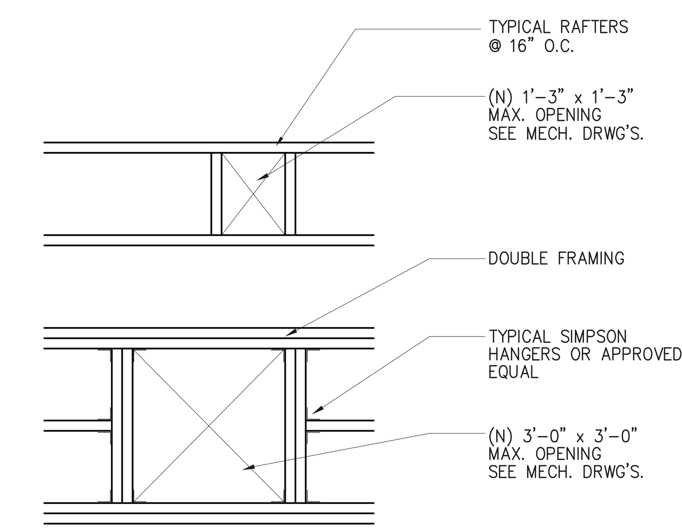

(N) ROOF OPENING — 5

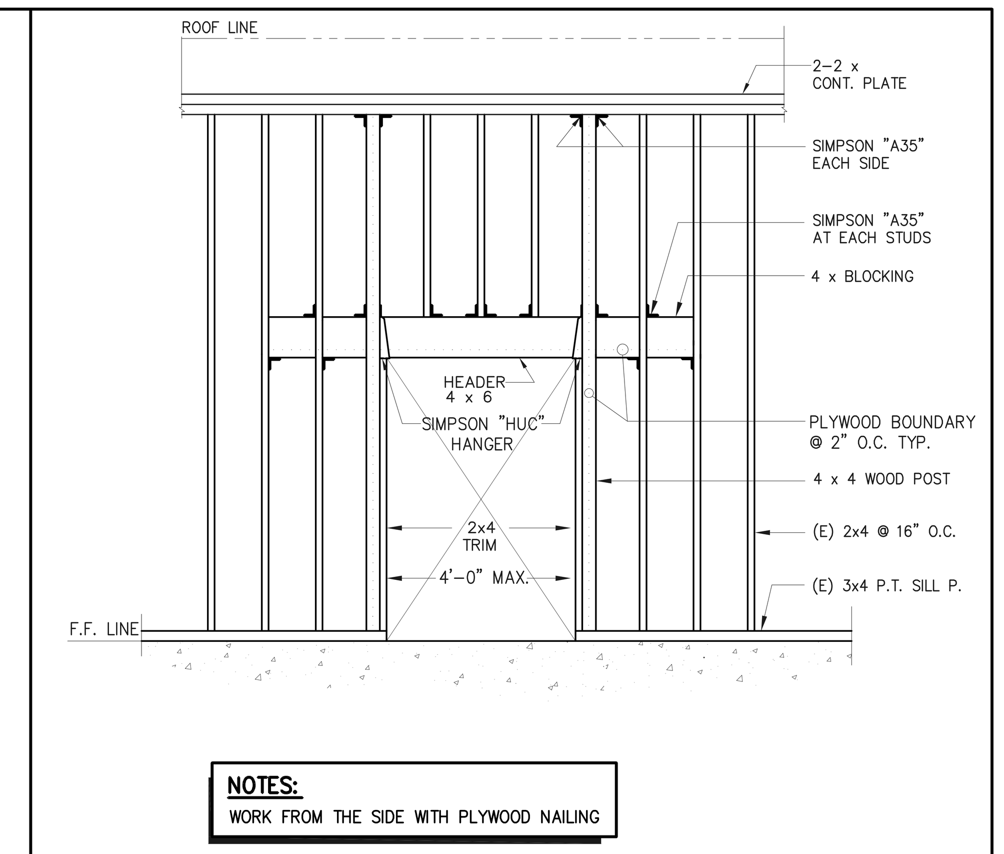

(N) OPENING DETAIL — 1

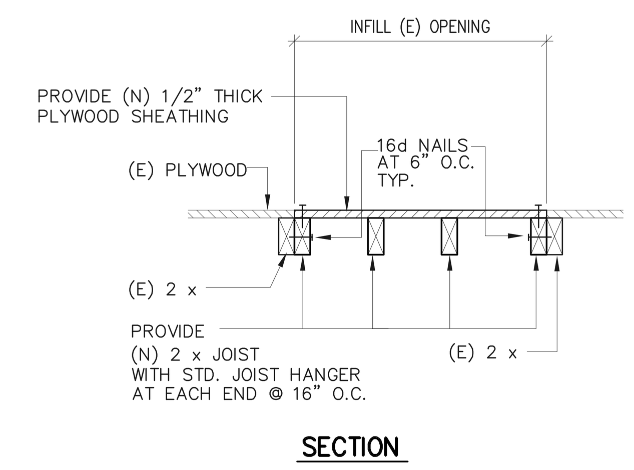

INFILL (E) ROOF OPENING — 6

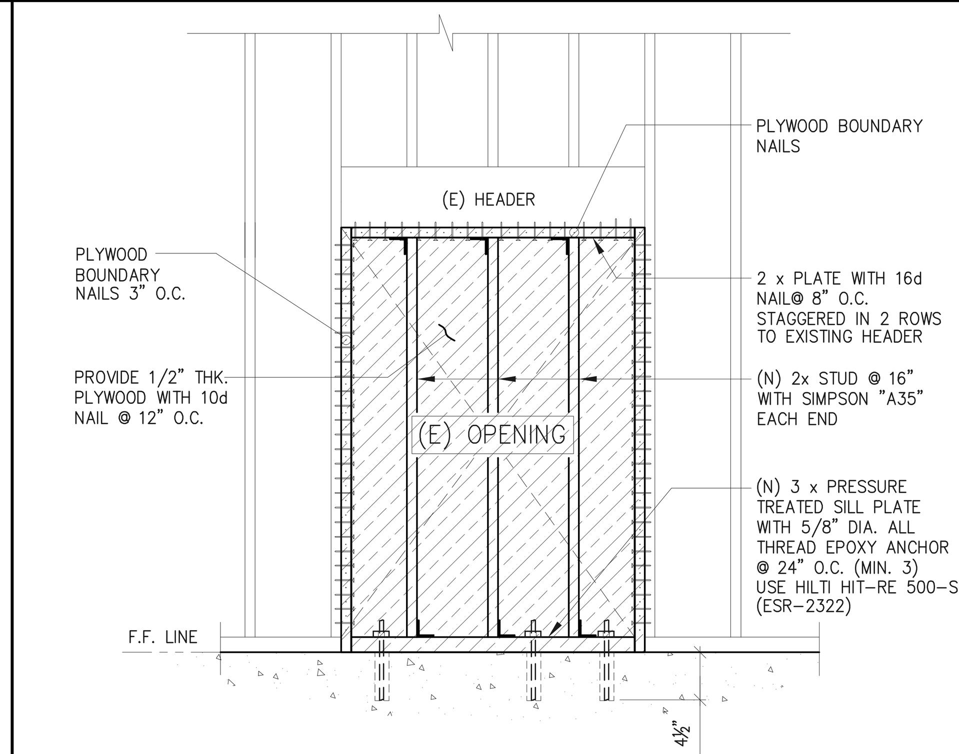

INFILL DETAIL — 2

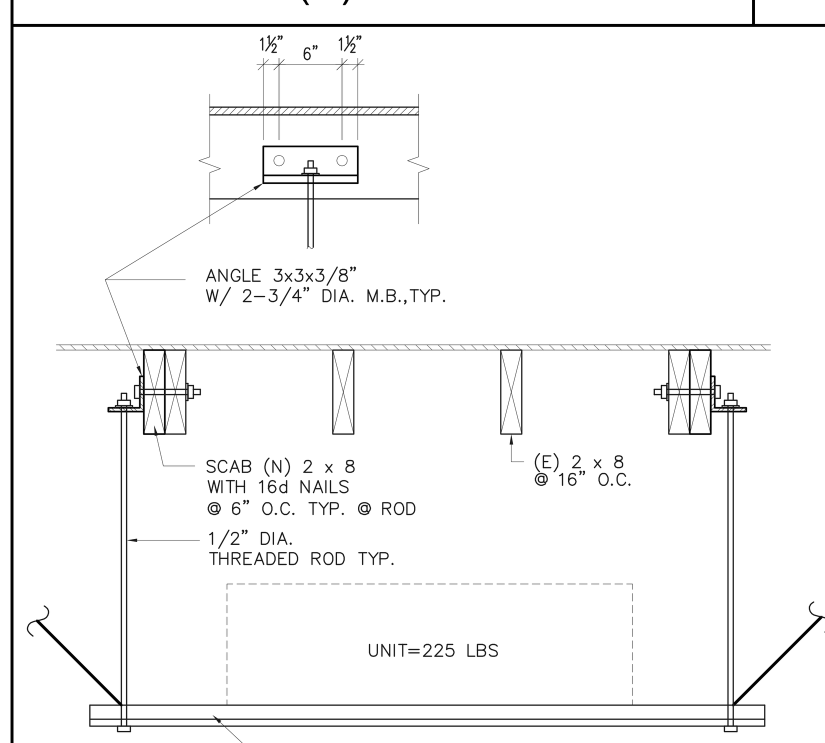

NOTES:
1. PROVIDE SWAY RODS/WIRE IN PERPENDICULAR DIRECTION AS REQUIRED TO BRACE THE UNIT.
2. SEE ARCHT'L/MECH DRAWINGS FOR LOCATION AND WEIGHT OF UNITS.

HANGING UNIT DETAIL — 7

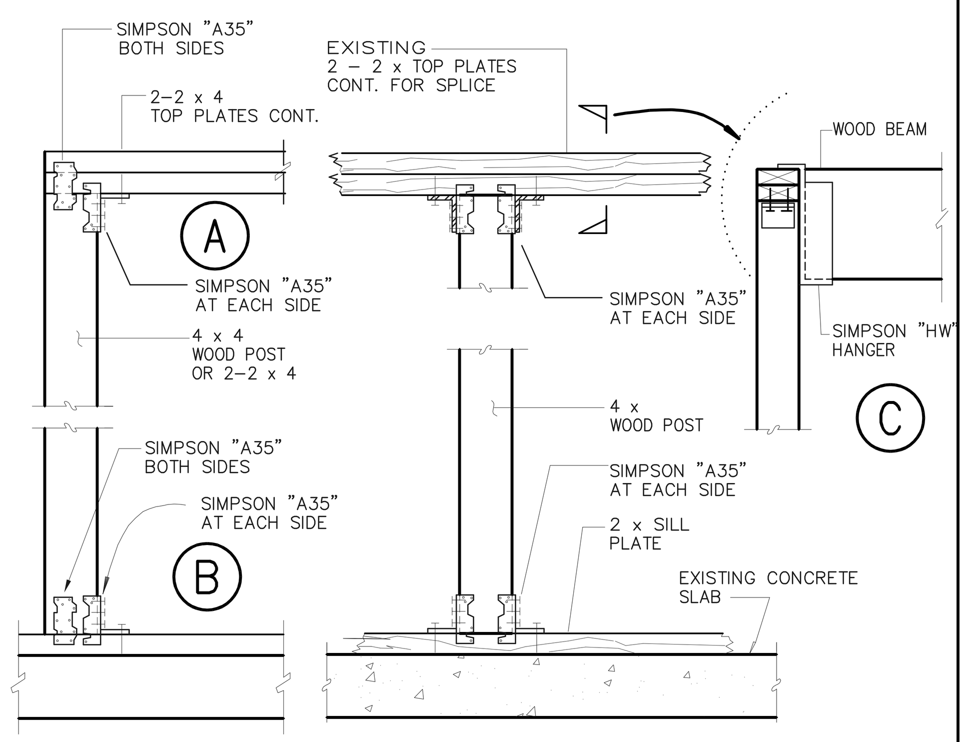

WOOD POST TO SLAB & TOP PLATE TO POST — 3

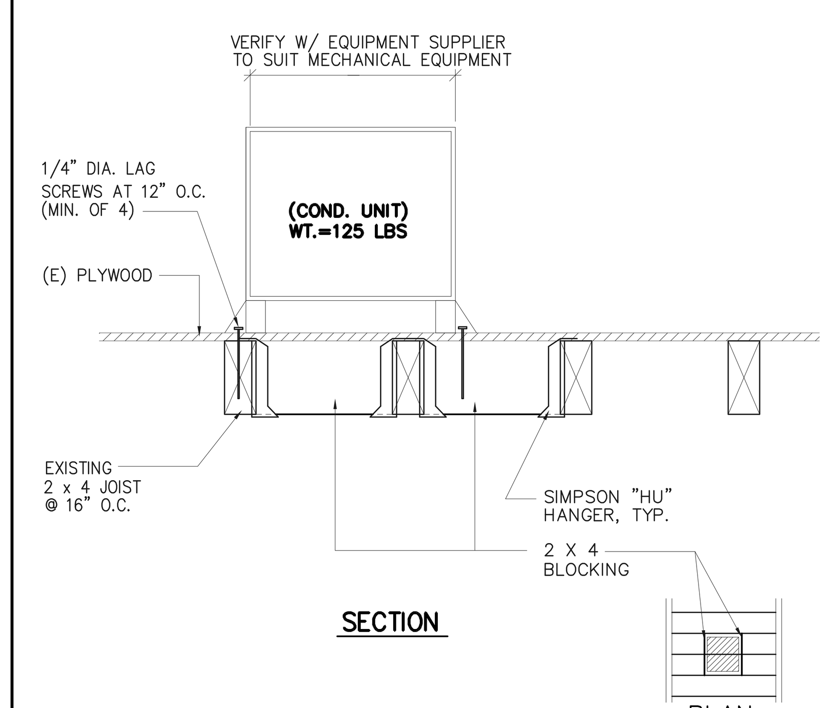

CONDENSING UNIT DETAIL — 8

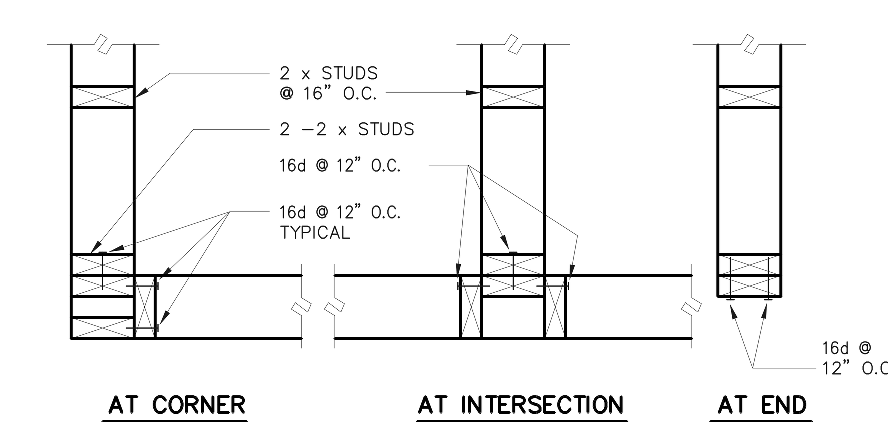

NOTE:
SEE PLANS FOR LOCATIONS OF PLYWOOD SHEATHING.

WOOD STUD CONNECTION — 4

job no.	A9041.109-P
drawn	
submittal	
Plan Check Submittal	03.27.2010
Plan Check Re-Submittal	10.29.2012
Issue For Bid	10.29.2012
revision	

JOB# 10–57
Bushra . Tsai. Incorporated
Consulting Structural Engineers Inc.
(FORMERLY AJIT S. RANDHAVA & ASSOCIATES)
2564 W. Woodland Dr., Anaheim, CA 92801
Tel : (714) 522–0911 Fax : (714) 522–1149

REGISTERED PROFESSIONAL ENGINEERS RAFEEK L BUSHRA NO. 4490 Exp. 12-31-10 STRUCTURAL STATE OF CALIFORNIA

Tenant Improvements / Accessibility Upgrades for :
CITY OF TORRANCE
PERSONNEL BUILDING
3031 Torrance Boulevard, Torrance, CA 90503

OWNER : City of Torrance, Department of General Services
3350 Civic Center Drive, Torrance, CA 90503

WITHEE MALCOLM ARCHITECTS, LLP
2251 W. 190th St.
Torrance, Ca 90504
t. 310.217.8885
f. 310.217.0425

all ideas, designs and plans represented by this drawing are the exclusive property of the withee malcolm partnership, architects, and shall not be reproduced in whole or in part without the express prior written permission of said architects, any unauthorized reuse of these plans other than for the project and location shown is prohibited.

sheet title **floor plan and details**

sheet **ST-1**

BID SET ONLY

DUCT INSULATION SCHEDULE

SERVICE		1"	1-1/2"	2"	FIELD APPLIED FOIL & PAPER JACKET REQUIRED	VAPOR RETARDER REQUIRED	MINERAL FIBER BLANKET	MINERAL FIBER BOARD	WEATHERPROOF BARRIER (IF INSTALLED OUTDOORS)
ROUND SUPPLY	CONCEALED		●		●	●			
	EXPOSED		●		●	●			●
RECTANGULAR SUPPLY	CONCEALED		●		●	●			
	EXPOSED		●		●	●			●
ROUND RETURN	CONCEALED		●		●	●			
	EXPOSED		●		●	●			●
RECTANGULAR RETURN	CONCEALED		●		●	●			
	EXPOSED		●		●	●			●

INSULATION MATERIALS SHALL BE AS FOLLOWS:

MINERAL-FIBER BOARD: GLASS FIBERS BONDED WITH A THERMOSETTING RESIN. COMPLY WITH ASTM C 612, TYPE IB, WITHOUT FACING AND WITH ALL SERVICE JACKET MANUFACTURED FROM KRAFT PAPER, REINFORCING SCRIM, ALUMINUM FOIL, AND VINYL FILM.

MINERAL-FIBER BLANKET: GLASS FIBERS BONDED WITH A THERMOSETTING RESIN. COMPLY WITH ASTM C 553, TYPE C, WITHOUT FACING AND WITH ALL SERVICE JACKET MANUFACTURED FROM KRAFT PAPER, REINFORCING SCRIM, ALUMINUM FOIL, AND VINYL FILM.

FIELD APPLIED JACKETS: ASTM C 921, TYPE 1. FOIL AND PAPER JACKET: LAMINATED, GLASS-FIBER REINFORCED, FLAME-RETARDANT KRAFT PAPER AND ALUMINUM FOIL.

AVAILABLE MANUFACTURERS: INCLUDE BUT NOT LIMITED TO CERTAINTEED MANSON, JOHNS MANFIELD, KNAUF FIBERGLASS GMBH, OWENS-CORNING FIBERGLAS CORP., SCHULLER INTERNATIONAL, INC.

ALL INSULATION TO COMPLY WITH CURRENT CALIFORNIA MECHANICAL CODE.

INSULATION THICKNESSES SHOWN REPRESENT THE NOMINAL THICKNESS OF INSULATION PRIOR TO INSTALLATION.

VERIFY FIELD CONDITIONS

THESE DESIGN DRAWINGS ARE SCHEMATIC. CONTRACTOR SHALL VISIT THE SITE PRIOR TO BIDDING OR AWARD OF CONTRACT TO INSPECT EXISTING FIELD CONDITIONS. CONTRACTOR SHALL INCLUDE ALL LABOR AND MATERIALS NECESSARY FOR FIELD MODIFICATIONS DUE TO EXISTING CONDITIONS NOT INDICATED ON THESE PLANS.

CONTRACTOR SHALL CONTACT THE ARCHITECT, ENGINEER OR OWNER PRIOR TO BIDDING FOR INTERPRETATIONS AND CLARIFICATIONS OF THE DESIGN AND INCLUDE IN THE BID ALL COSTS TO MEET THE DESIGN INTENT OF THESE PLANS. CLARIFICATIONS MADE BY THE ARCHITECT, ENGINEER OR OWNER AFTER BIDDING WILL BE FINAL AND SHALL BE IMPLEMENTED AT CONTRACTOR'S COST.

BIDDING CONTRACTORS SHALL HAVE A WORKING KNOWLEDGE OF LOCAL CODES AND ORDINANCES AND SHALL INCLUDE IN THE BID THE COSTS FOR ALL WORK INSTALLED IN STRICT ACCORDANCE WITH THE GOVERNING CODES, THE PLANS AND SPECIFICATIONS NOT WITHSTANDING. CONTRACTOR SHALL ALERT THE ARCHITECT, ENGINEER OR OWNER OF ANY APPARENT DISCREPANCIES BETWEEN GOVERNING CODES AND DESIGN INTENT.

THESE DESIGN DRAWINGS WERE COMPLETED WITH RESPECT TO THE INFORMATION AVAILABLE AT THE TIME OF DESIGN, INCLUDING ARCHITECTURAL BACKGROUNDS, AS-BUILT DRAWINGS, FIELD SURVEY, AND APPLICABLE CODES. IN THE EVENT CONDITIONS ARE NOT AS SHOWN ON THESE DRAWINGS, PLEASE CONTACT THE ARCHITECT OR ENGINEER FOR ANY COORDINATION NECESSARY TO COMPLETE THE PROJECT.

MECHANICAL LEGEND

Symbol	Description
12x12	DUCTWORK, FIRST FIGURE IS SIZE OF SIDE IN VIEW
R	DUCT RISE IN DIRECTION OF FLOW
D	DUCT DROP IN DIRECTION OF FLOW
	DUCT TRANSITION
	FLEXIBLE CONNECTION
	90° ELBOW WITH TURNING VANES
	TAKE-OFF WITH EXTRACTOR
	ACCESS PANEL OR DOOR
	MANUAL VOLUME DAMPER (MVD)
SFD	AUTOMATIC COMBINATION SMOKE/FIRE DAMPER (SFD)
FD	AUTOMATIC FIRE DAMPER (FD)
	REMOTE VOLUME DAMPER. SEE DETAIL.
	DUCT TO BE REMOVED
	LINED DUCTWORK
	FLEXIBLE DUCT
	SUPPLY AIR OR OUTSIDE AIR DUCT UP AND DOWN
	RETURN AIR DUCT UP AND DOWN
	EXHAUST AIR DUCT UP AND DOWN
	EXHAUST FAN OR VENTILATOR
1.-2. / 3.	1. DIFFUSER TYPE (REFER TO DIFFUSER SCHEDULE). 2. NECK SIZE. (ALSO RUNOUT SIZE UON). 3. CFM THE DIFFUSER IS TO BE BALANCED TO.
	RETURN REGISTER OR RETURN GRILLE
	SIDEWALL SUPPLY REGISTER
	RETURN AIR REGISTER
	EXHAUST AIR REGISTER
	4-WAY SUPPLY DIFFUSER
	3-WAY SUPPLY DIFFUSER
	2-WAY SUPPLY DIFFUSER
	1-WAY SUPPLY DIFFUSER
	POINT OF CONNECTION/ POINT OF DISCONNECTION
	POINT OF DISCONNECTION
20/12L / 200	DOOR LOUVER (DIMS) / (CFM)
UC 1/2" / 200	UNDERCUT DOOR (DIMS) / (CFM)
T	THERMOSTAT, MOUNT @ 4'-0" AFF
H	HUMIDSTAT
S	REMOTE TEMPERATURE SENSOR
SD	SMOKE DETECTOR
	BY-PASS TIMER
CWS	CHILLED WATER SUPPLY
CWR	CHILLED WATER RETURN
LPS	LOW PRESSURE STEAM SUPPLY (LPS)
LPR	LOW PRESSURE STEAM RETURN (LPR)
HWS	HOT WATER SUPPLY
HWR	HOT WATER RETURN
RL	REFRIGERANT LIQUID
RS	REFRIGERANT SUCTION
CD	CONDENSATE DRAIN
PD	PUMPED CONDENSATE

EQUIPMENT SUBSTITUTIONS

SUBSTITUTIONS WILL NOT BE ALLOWED UNLESS AUTHORIZED IN WRITING BY THE ARCHITECT, ENGINEER AND OWNER. THE CONTRACTOR IS COMPLETELY AND SOLELY RESPONSIBLE FOR ALL ASPECTS OF THE SUBSTITUTION INCLUDING UPDATING CONSTRUCTION DOCUMENTS, OBTAINING APPROVALS AND PERMITS FROM THE LOCAL AUTHORITY, AND COORDINATING WITH ALL TRADES TO ENSURE CHANGES TO AFFECTED BUILDING SYSTEMS ARE ACCOUNTED FOR AND ACCEPTABLE TO THE ENGINEERING TEAM. IF SUBSTITUTED EQUIPMENT REQUIRES ADDITIONAL ENGINEERING, CONTRACTOR SHALL BE RESPONSIBLE FOR PAYING FEES TO THE ENGINEERING TEAM. CONTRACTOR SHALL ENSURE SUBSTITUTED EQUIPMENT MEETS OR EXCEEDS DESIGN INTENT REGARDING RATINGS, PERFORMANCE, DIMENSIONAL CLEARANCES, PHYSICAL DIMENSIONS (MAX/MIN), WEIGHT LIMITATIONS, AND OTHER ASPECTS, PROVING SUBSTITUTION IS SUITABLE TO THE APPLICATION. ENGINEERS WILL REVIEW THE RATING AND PERFORMANCE OF SUBSTITUTED EQUIPMENT ONLY AND WILL NOT ASSUME RESPONSIBILITY FOR SUBSTITUTION AT ANY LEVEL.

IF CONTRACTOR CAN NOT MAKE SUBSTITUTED EQUIPMENT WORK IN THIS PROJECT, CONTRACTOR SHALL REVERT TO REQUIREMENTS OF PERMITTED CONSTRUCTION DOCUMENTS AT THEIR EXPENSE.

IT IS UNDERSTOOD BY ALL PARTIES THAT ANY SUBSTITUTIONS OF SPECIFIED PRODUCTS ARE DONE FOR THE PURPOSE OF COST SAVINGS TO THE OWNER. THEREFORE, ANY MATERIAL SUBSTITUTIONS OR DEVIATIONS PROPOSED BY THE CONTRACTOR SHALL BE INCLUDED WITH THE INITIAL BID AND SHALL SHOW A LINE ITEM CREDIT TO THE OWNER FOR EACH ITEM SUBSTITUTED IN LIEU OF SPECIFIED PRODUCTS.

SCHEDULE OF DIFFUSERS, REGISTERS AND GRILLES

UNIT NO.	MANUFACTURER	MODEL	SIZE OF DIFFUSER	NOTES
S1-- / -	KRUEGER	51400	24" X 24"	1
R1-- / -	KRUEGER	S80	SEE PLAN	1,3
E1-- / -	KRUEGER	S80	12" X 12"	1,3

NOTES:
1. GC TO COORDINATE PAINTING REQUIREMENTS WITH ARCHITECT.
2. 24"x24" PLAQUE DIFFUSER. PROVIDE ACCESSORIES AS NECESSARY TO MAKE IT A 3-WAY THROW.
3. 35° DEFLECTION 3/4" SPACED GRILLE. FRAME IS 1-3/4" LARGER THAN NECK SIZE IN BOTH DIMENSIONS.

FAN SCHEDULE

UNIT NO.	MANUFACTURER	MODEL	FAN TYPE	CFM	E.S.P. IN. W.G.	RPM	TIP SPEED FPM	DRIVE	MOTOR (HP)	WEIGHT (LBS)	VOLTAGE	CONTROL	NOTES
EF 1	COOK	100 ACEB	EXHAUST	490	0.20	1085	2840	BELT	1/6	50	115/1/60	TIMECLOCK	1
EF 2	COOK	70 ACEB	EXHAUST	70	0.20	844	2209	BELT	1/6	50	115/1/60	TIMECLOCK	1
EF 3	COOK	100 ACEB	EXHAUST	490	0.20	1085	2840	BELT	1/6	50	115/1/60	TIMECLOCK	1

NOTES:
1. PROVIDE FACTORY BIRDSCREEN, GRAVITY BACKDRAFT DAMPER, AND ROOF CURB.

INSTALL PER NFPA REQUIREMENTS AND MANUFACTURER'S RECOMMENDATIONS.

ABBREVIATIONS

ABBR.	DESCRIPTION
ABV	ABOVE
ACP	ASBESTOS CONCRETE PIPE
ADA	AMERICAN DISABILITIES ACT.
AF	AIR FOIL
AFD	AUTOMATIC FIRE DAMPER
AFF	ABOVE FINISHED FLOOR
AFG	ABOVE FINISHED GRADE
AHU	AIR HANDLING UNIT
AP	ACCESS PANEL
ASME	AMERICAN SOCIETY OF MECHANICAL ENGINEERS
ASTM	AMERICAN SOCIETY FOR TESTING MATERIALS
BEL	BELOW
BDD	BACKDRAFT DAMPER
BFP	BACK FLOW PREVENTER
BHP	BRAKE HORSE POWER
BI	BACKWARD INCLINED
BTU	BRITISH THERMAL UNIT
BTUH	BRITISH THERMAL UNIT PER HOUR
C	CONVECTOR
CA	COMBUSTION AIR
CAP	CAPACITY
CC	COOLING COIL
CD	CEILING DIFFUSER
CE	CAPPED END
CFCI	CONTRACTOR FURNISHED, CONTRACTOR INSTALLED
CFH	CUBIC FEET PER HOUR
CFM	CUBIC FEET PER MINUTE
CH	CHILLER
CHWR	CHILLED WATER RETURN
CHWS	CHILLED WATER SUPPLY
CKT	CIRCUIT
CLG	CEILING
CONC	CONCRETE
CONN	CONNECTION
CONT	CONTINUE OR CONTINUATION
CP	CONDENSATE PUMP
CR	CONDENSATE RETURN
CW	COLD WATER
D	CONDENSATE DRAIN
dB	DECIBEL
DB	DRY BULB
DIA	DIAMETER
DIM	DIMENSIONS
DIR	DIRECT
DL	DOOR LOUVER
DN	DOWN
DWG	DRAWING
EA	EXHAUST AIR
EAD	EXHAUST AIR DUCT
EAR	EXHAUST AIR REGISTER
EAT	ENTERING AIR TEMPERATURE
EER	ENERGY EFFICIENCY RATIO
EF	EXHAUST FAN
EFF	EFFICIENCY
EG	EXHAUST GRILLE
EL/ELEV	ELEVATION
ELEC	ELECTRICAL
ENT	ENTERING
EQPT	EQUIPMENT
ESP	EXTERNAL STATIC PRESSURE

ABBR.	DESCRIPTION
ET	EXPANSION TANK
EWT	ENTERING WATER TEMPERATURE
(E)/EXIST	EXISTING
°F	DEGREES FAHRENHEIT
FC	FLEXIBLE CONNECTION
FC/FCU	FAN COIL UNIT
FD	FIRE DAMPER
FIN	FINISHED
FLA	FULL LOAD AMPERAGE
FLR	FLOOR
FPI	FINS PER INCH
FPM	FEET PER MINUTE
FS	FLOW SWITCH
FT	FEET
FTR	FLUE THRU ROOF
FUT	FUTURE
GA	GAUGE
GAL	GALLONS
GALV	GALVANIZED
GBDD	GRAVITY BACK DRAFT DAMPER
GC	GENERAL CONTRACTOR
GPH	GALLONS PER HOUR
GPM	GALLONS PER MINUTE
HCP	HANDICAPPED
HDR	HEADER
HP	HORSEPOWER
H.STAT	HUMIDSTAT
HT	HEIGHT
HTG	HEATING
HTR	HEATER
HVAC	HEATING, VENTILATING,
HZ	AIR CONDITIONING HERTZ
ID	INSIDE DIAMETER
IE	INVERT ELEVATION
IN	INCH
IW	INDIRECT WASTE
KW	KILOWATT
(L)	LINED DUCTWORK
LAT	LEAVING AIR TEMPERATURE
LBS	POUNDS
LPS	LOW PRESSURE STEAM
LVG	LEAVING
LWT	LEAVING WATER TEMPERATURE
MAD	MIXED AIR DUCT
MAX	MAXIMUM
MBH	THOUSAND BTU PER HOUR
MCA	MINIMUM CIRCUIT AMPS
MCC	MOTOR CONTROL CENTER
MIN	MINIMUM
MPG	MEDIUM PRESSURE GAS
MPS	MEDIUM PRESSURE STEAM
MTD	MOUNTED
MUA	MAKE-UP AIR
MVD	MANUAL VOLUME DAMPER
NC	NORMALLY CLOSED
NIC	NOT IN CONTRACT
NO	NORMALLY OPEN
NOM	NOMINAL
NTS	NOT TO SCALE
OBD	OPPOSED BLADE DAMPER
OC	ON CENTER
OD	OUTSIDE DIAMETER
ODP	OPEN DRIP PROOF
OFCI	OWNER FURNISHED, CONTRACTOR INSTALLED
OFOI	OWNER FURNISHED, OWNER INSTALLED

ABBR.	DESCRIPTION
OPNG	OPENING
OPER	OPERATING
OSA	OUTSIDE AIR SUPPLY
PD	PRESSURE DIFFERENTIAL
POC	POINT OF CONNECTION
POD	POINT OF DISCONNECTION
PPM	PARTS PER MILLION
PRESS	PRESSURE
PRV	PRESSURE REDUCING VALVE
PSI	POUNDS PER SQUARE INCH
PSIG	POUNDS PER SQUARE INCH GAUGE
QBD	QUADRANT BALANCING DAMPER
RA	RETURN AIR
RAD	RETURN AIR DUCT
RAF	RETURN AIR FAN
RAR	RETURN AIR REGISTER
RCP	REFLECTED CEILING PLAN
RED	REDUCER
RET	RETURN
RL	REFRIGERANT LIQUID
RM	ROOM
RS	REFRIGERANT SUCTION
REQ'D	REQUIRED
RPM	REVOLUTIONS PER MINUTE
SA	SUPPLY AIR
SAD	SUPPLY AIR DUCT
SD	SMOKE DETECTOR
SENS	SENSIBLE
SF	SUPPLY FAN
SFD	SMOKE/FIRE DAMPER
SH	SHEET
SHLD	SHIELDED
SLP	SLOPE
S/M	SHEET METAL
SMACNA	SHEET METAL AND AIR CONDITIONING CONTRACTORS NATIONAL ASSOCIATION
SOV	SHUT-OFF-VALVE
SPECS	SPECIFICATIONS
SP	STATIC PRESSURE
SPKR	SPRINKLER
SQ FT	SQUARE FEET
SS	STAINLESS STEEL
STAT	THERMOSTAT
ST/SW	BY-PASS TIMER/ SELECTION SWITCH
STD	STANDARD
SWR	SIDEWALL SUPPLY REGISTER
SYS	SYSTEM
T	TELEPHONE
TDH	TOTAL DYNAMIC HEAD
TEFC	TOTALLY ENCLOSED FAN COOLED
TEMP	TEMPERATURE
TH	THROAT
TYP	TYPICAL
UC/UD	UNDERCUT DOOR
UL	UNDERWRITER'S LABORATORIES
UON	UNLESS OTHERWISE NOTED
V	VOLT
VA	VALVE
VAT	VINYL ASBESTOS TILE
VAV	VARIABLE AIR VOLUME
VEL	VELOCITY
VTR	VENT THRU ROOF
W	WIRE
WB	WET BULB
WG	WATER GAUGE
WT	WEIGHT
W/	WITH
XFMR	TRANSFORMER

GENERAL NOTES

1 THE MECHANICAL SYSTEM DESIGN, INSTALLATION AND MATERIALS SHALL CONFORM TO THE CURRENT EDITION OF THE CALIFORNIA MECHANICAL CODE 2010, UNIFORM MECHANICAL CODE 2009 AND ALL APPLICABLE FEDERAL, STATE, AND LOCAL CODES AND ALL AUTHORITIES HAVING JURISDICTION.

2 WORKMANSHIP: THE WORK SHALL BE ACCOMPLISHED IN A THOROUGH & WORKMANLIKE MANNER SATISFACTORY TO AND MEETING THE APPROVAL OF THE ARCHITECT'S & OWNER'S REPRESENTATIVE.

3 MATERIALS: MECHANICAL QUALITY AND WEIGHTS OF MATERIALS, ALTERNATE METHODS OF CONSTRUCTION SHALL CONFORM TO THE CURRENT EDITION OF THE MECHANICAL CODE. ALL MATERIAL AND EQUIPMENT SHALL BE NEW FIRST QUALITY, UNLESS OTHERWISE NOTED, AND OF THE BEST GRADE OF THE RESPECTIVE KIND AND FREE FROM ALL DEFECTS. MATERIALS FOR SIMILAR USE SHALL BE OF THE SAME TYPE AND MANUFACTURER UNLESS OTHERWISE SPECIFIED.

4 SITE INSPECTION: CONTRACTOR SHALL VISIT THE SITE OF WORK PRIOR TO SUBMISSION OF HIS BID AND THOROUGHLY FAMILIARIZE HIMSELF WITH THE WORKING CONDITIONS AND EXACT NATURE OF THE WORK. SUBMISSION OF A BID ACKNOWLEDGES FULL RESPONSIBILITY FOR FURNISHING A COMPLETE & FUNCTIONAL SYSTEM. NO CHANGES IN CONTRACT WILL BE MADE TO ACCOMMODATE OR ALLOW EXTRA FUNDING FOR ANY OMISSIONS WHICH RESULTS FROM A FAILURE TO THOROUGHLY MAKE THE EXAMINATION.

5 CODES AND PERMITS: ALL EQUIPMENT, FIXTURES, INSTALLATION, ETC. SHALL CONFORM TO ALL APPLICABLE CODES AND ORDINANCES. CONTRACTOR SHALL OBTAIN AND PAY FOR ALL PERMITS, INSPECTIONS AND FEES RELATED TO THIS PROJECT.

6 AS-BUILT: CONTRACTOR SHALL PROVIDE A COMPLETE SET OF AS-BUILT TRANSPARENCIES WITH ALL CHANGES NOTED THEREON AT THE COMPLETION OF THE PROJECT.

7 GUARANTEE: CONTRACTOR SHALL UNCONDITIONALLY GUARANTEE ALL LABOR AND MATERIAL ON ALL WORK AGAINST DEFECTS IN WORKMANSHIP & MATERIALS FOR A PERIOD OF 1 YEAR FROM ACCEPTANCE OF WORK BY OWNER.

8 SUBMITTALS: CATALOG INFORMATION & CUTS OF ALL EQUIPMENT FIXTURES AND DEVICES SHALL BE SUBMITTED FOR REVIEW (SIX COPIES OF EACH).

9 COORDINATION: THE DRAWINGS ARE DIAGRAMMATIC AND ARE INTENDED TO SHOW SCOPE. DRAWINGS ARE NOT INTENDED TO REPRESENT ACTUAL SITE CONDITIONS. CONTRACTOR SHALL COORDINATE HIS WORK WITH ALL OTHER TRADES TO PROVIDE THE BEST ARRANGEMENT OF ALL DUCT, PIPES, CONDUIT, STRUCTURAL ELEMENTS, ETC. WITHIN THE SPACE OR ASSOCIATED WITH THIS PROJECT. CONTRACTOR SHALL VERIFY CONDITIONS PRIOR TO COMMENCING WORK. DO NOT SCALE THESE PLANS. REFER TO ARCHITECTURAL DRAWINGS FOR ALL DIMENSIONS.

10 CUTTING AND PATCHING: ALL CUTTING & PATCHING OF THE EXISTING STRUCTURE SHALL BE PROVIDED UNDER OTHER SECTIONS OF THE WORK. PROVIDE ALL NECESSARY REQUIREMENTS TO THE PROJECT SUPERINTENDENT.

11 CLEANUP: UPON COMPLETION OF THE WORK, THE CONTRACTOR SHALL REMOVE ALL SURPLUS MATERIALS, EQUIPMENT & DEBRIS INCIDENTAL TO THIS WORK AND LEAVE THE PREMISES CLEAN AND ORDERLY.

12 SLOPE ALL CONDENSATE DRAIN LINES AT 1%.

13 ANY DEVIATIONS FROM THE DRAWINGS OR SPECIFICATIONS SHALL BE BROUGHT TO THE ATTENTION OF THE ARCHITECT AND ENGINEER PRIOR TO INSTALLATION. CONTRACTOR SHALL OBTAIN WRITTEN APPROVAL OF ANY AND ALL CHANGES FROM ARCHITECT AND ENGINEER PRIOR TO PROCUREMENT.

14 THESE DRAWINGS DO NOT INCLUDE ALL NECESSARY SAFETY REQUIREMENTS. CONTRACTOR TO COMPLY TO SAFETY REQUIREMENTS SET FORTH BY THE LOCAL AUTHORITIES HAVING JURISDICTION.

15 CONTRACTOR SHALL ASSUME RESPONSIBILITY FOR LOCATION OF POINTS OF CONNECTION WITHIN A FIFTEEN (15) FOOT RADIUS FROM THOSE SHOWN ON PLANS. THE MECHANICAL CONTRACTOR SHALL VERIFY THE EXACT LOCATION, SIZE AND ELEVATION OF ALL EXISTING DUCTS, ETC., BEFORE STARTING ANY WORK, AND SHALL NOTIFY THE GENERAL CONTRACTOR IF SAID LOCATIONS ARE NOT IN THE LOCATIONS SHOWN ON THE PLANS OR ARE NOT OF SUFFICIENT SIZE TO MAKE CONNECTION IN COMPLIANCE WITH THE PLANS.

16 TEST SYSTEM(S) IN ACCORDANCE WITH REQUIREMENTS OF THE GOVERNING AUTHORITIES.

17 MECHANICAL CONTRACTOR SHALL PATCH AND REPAIR ALL SURFACE AREAS DAMAGED BY OPERATION.

18 FIRE SAFE ALL DUCT PENETRATIONS THROUGH FIRE RATED WALLS AND FLOORS WITH U.L. LISTED FIRE RATING APPROVED BY THE GOVERNING JURISDICTION. INSTALL IN ACCORDANCE WITH THE PRODUCTS LISTING AND MANUFACTURERS REQUIREMENTS.

19 CONTRACTOR SHALL HAVE A COMPLETE SET OF RECORD DRAWINGS ON THE SITE PRIOR TO START OF CONSTRUCTION AND SHALL BE RESPONSIBLE FOR COORDINATION OF NEW WORK WITH EXISTING CONDITIONS.

20 ANY MATERIAL AND/OR EQUIPMENT INSTALLED THAT HAS NOT BEEN SPECIFICALLY APPROVED IN WRITING BY THE ARCHITECT, OWNER, OR ENGINEER MAY BE SUBJECT TO REMOVAL (AT THE OWNER'S REQUEST) AND THE SPECIFIED MATERIAL AND/OR EQUIPMENT PROVIDED AND INSTALLED AT THE CONTRACTORS EXPENSE.

21 RTU MANUFACTURER SHALL SUPPLY ROOF CURB. ROOF CURB EMPLOYED SHALL BE SLOPED TO MATCH ROOF PITCH AS REQUIRED.

22 COORDINATE DIFFUSER LAYOUT WITH REFLECTED CEILING PLAN. IN THE EVENT OF CONFLICT BETWEEN DIFFUSERS AND LIGHTS, THE DIFFUSERS SHALL BE REPOSITIONED TO ACCOMMODATE THE LIGHTING.

23 ROUND BRANCH DUCT TAKE-OFFS FROM RECTANGULAR DUCT TO BE MADE WITH CONICAL BELLMOUTH SPIN-IN FITTING AND DAMPER WITHOUT SCOOP.

24 ROUND BRANCH DUCT TAKE-OFFS FROM ROUND DUCT SHALL BE MADE WITH PRE-MANUFACTURED WYES OR 45/90 BOOTS.

25 ALL SQUARE TO ROUND TRANSITIONS SHALL BE MADE WITH PRE-MANUFACTURED FITTINGS.

26 THE ENTIRE INSTALLATION SHALL CONFORM TO THE REQUIREMENTS OF THE CURRENT EDITION OF THE APPLICABLE MECHANICAL AND BUILDING CODES AND LOCAL CITY AMENDMENTS, CODES, AND REGULATIONS.

27 MECHANICAL CONTRACTOR SHALL COORDINATE ALL WORK WITH OTHER TRADES AND SHALL MANAGE CONTRACT RESPONSIBILITIES TO MEET PROJECT COMPLETION DATE.

28 INTERFERENCES OR OBSTRUCTIONS BETWEEN TRADES OCCURRING DURING CONSTRUCTION SHALL BE REPORTED IMMEDIATELY TO THE ARCHITECT AND ALL WORK SHALL CEASE IN THAT AREA UNTIL RESOLVED BY THE ARCHITECT AND/OR ENGINEER.

29 ALL CONDENSATE DRAIN PIPING, GAS PIPING AND FINAL CONNECTIONS SHALL BE BY THE PLUMBING CONTRACTOR.

30 ALL CARPENTRY WORK INCLUDING ROOF CURBS, PLATFORMS, AND ROOF OPENINGS SHALL BE BY THE GENERAL CONTRACTOR.

31 VERIFY AND COORDINATE ALL FLOOR, WALL, AND ROOF OPENINGS WITH GENERAL CONTRACTOR PRIOR TO INSTALLATION OF EQUIPMENT AND DUCTWORK. SEE STRUCTURAL DRAWINGS. ALL OPENINGS, PATCHING, ETC., AND WEATHERPROOFING BY GENERAL CONTRACTOR.

32 INSTALL AUTOMATIC FIRE / COMBINATION FIRE/SMOKE DAMPERS IN ALL FIRE-RATED CEILINGS, WALLS, AND FLOORS AS REQUIRED. SEE ARCHITECTURAL DRAWINGS FOR LOCATIONS AND SPECIFICATIONS OF ALL RATED STRUCTURES.

33 FURNISH AND INSTALL DUCT ACCESS DOORS ADJACENT ALL FIRE DAMPERS, FIRE-SMOKE DAMPERS, AND ANY OTHER EQUIPMENT WHICH MAY REQUIRE PERIODIC ADJUSTMENT OR INSPECTION. COORDINATE LOCATIONS OF ALL ACCESS DOORS AND PANELS WITH ARCHITECT AND LANDLORD'S FIELD REPRESENTATIVE.

34 THE INSIDE SURFACES OF PLENUMS, DUCTS, ETC., BEHIND ALL AIR DISTRIBUTION DEVICES SHALL BE PAINTED FLAT BLACK.

35 ALL CONNECTIONS BETWEEN A/C UNITS, OR ANY MECHANICAL EQUIPMENT CONTAINING FANS OR THAT MAY PRODUCE VIBRATION, AND ASSOCIATED DUCTWORK SHALL HAVE FIREPROOF, HEAVY DUTY FLEX-CONNECTIONS (CITY APPROVED) WITH 3" MINIMUM CLEARANCE. ISOLATE ALL HVAC UNITS/FANS AND EQUIPMENT FROM STRUCTURE WITH APPROVED ISOLATION MOUNTS.

36 ALL EQUIPMENT EXPOSED TO WEATHER, DUCT, ETC., SHALL BE COMPLETELY WEATHERPROOFED.

37 MANUAL VOLUME DAMPERS SHALL BE PROVIDED IN ALL DUCT TAKE-OFFS TO INDIVIDUAL CEILING DIFFUSERS, REGISTERS, AND GRILLES WHETHER SHOWN ON DRAWINGS OR NOT.

38 ALL DUCTWORK SHALL BE RIGID GALVANIZED SHEET METAL (RECTANGULAR OR ROUND) UNLESS SPECIFICALLY NOTED OTHERWISE ON THE PLANS. ALL EXPOSED SHEETMETAL DUCT WHICH IS TO BE PAINTED SHALL BE "PAINT-GRIP" TYPE DUCT OR THOROUGHLY CLEANED IN PREPARATION FOR PAINTING. COORDINATE PAINTING REQUIREMENTS OF EXPOSED SHEETMETAL DUCTWORK WITH ARCHITECTURAL PLANS AND GC. CODE AND UL-181 APPROVED FLEXIBLE DUCT WITH POLYETHYLENE JACKET, FIBERGLASS INSULATION AND A FIBERGLASS THREADED MESHSCRIM AROUND A POLY CORE MAY BE USED IN CONCEALED SPACES FOR FINAL RIGID DUCT TO DIFFUSER CONNECTIONS ONLY. MAXIMUM LENGTH OF FLEXIBLE DUCT SHALL BE 5'-0". FLEX DUCT SHALL BE SUPPORTED TO ENSURE MINIMUM CENTERLINE RADIUS OF 1.5 X DUCT DIAMETER. ALUMINUM FLEXIBLE DUCT SHALL NOT BE USED.

39 ALL DUCT SHALL BE RIGID METAL GALVANIZED SHEET STEEL OF THICKNESS AS RECOMMENDED, CONSTRUCTED AND DETAILED IN LATEST SMACNA HVAC DUCT CONSTRUCTION STANDARDS AND PER THE LATEST EDITION OF THE MECHANICAL CODE ENFORCED IN THE PROJECT JURISDICTION.

40 MECHANICAL CONTRACTOR MUST PROVIDE TRANSITION FITTINGS FOR ROOF PENETRATIONS FROM ROUND TO SQUARE OR WHATEVER NECESSARY FOR EXHAUST, SUPPLY, AND RETURN DUCT APPLICATIONS.

41 WHERE EITHER THE SUPPLY OR RETURN DUCTS ARE SHOWN INSIDE LINED OR WHERE LINING IS NOT INDICATED, INSULATE ALL DUCTS PER INSULATION SCHEDULE, GENERAL NOTES AND MANUFACTURER PRINTED INSTRUCTIONS, INCLUDING ALL DUCT DROPS TO CEILING OUTLETS.

42 MECHANICAL CONTRACTOR SHALL COORDINATE VOLTAGE AND PHASE OF EACH ITEM OF EQUIPMENT REQUIRING POWER WITH THE ELECTRICAL CONTRACTOR PRIOR TO ORDERING.

43 WHERE REQUIRED, PROVIDE SEISMIC RESTRAINT FOR MECHANICAL SYSTEMS AND DUCTWORK AS RECOMMENDED BY SMACNA'S LATEST EDITION OF 'SEISMIC RESTRAINT MANUAL GUIDELINES FOR MECHANICAL SYSTEMS'.

44 PROVIDE ALL PIPING, SUPPORTS, DUCTWORK, EQUIPMENT, FITTINGS, TRANSITIONS, DAMPERS, VALVES, MISCELLANEOUS MATERIALS, TESTING, BALANCING, AND OTHER DEVICES REQUIRED FOR A COMPLETE AND FUNCTIONING SYSTEM.

45 INSTALLING CONTRACTOR IS RESPONSIBLE FOR ANY MECHANICAL WORK SHOWN ON ELECTRICAL AND ARCHITECTURAL DRAWINGS, SUCH AS CONTROL WIRING, LOUVERS, STARTERS, ETC.

46 ALL DUCT INSULATION SHALL BE PER INSULATION SCHEDULE, GOOD ENGINEERING PRACTICE, AND THE CURRENT ADOPTED MECHANICAL CODE FOR THE PROJECT JURISDICTION.

47 ALL OUTDOOR AIR SUPPLY AND EXHAUST EQUIPMENT MUST BE EQUIPPED WITH DAMPERS THAT AUTOMATICALLY CLOSE DURING PERIODS OF NON-USE.

48 ALL EQUIPMENT AND APPLIANCES ARE TO BE LISTED PRODUCTS AND INSTALLED IN ACCORDANCE WITH THEIR LISTING. ALL LISTING INFORMATION IS TO BE MADE AVAILABLE FOR INSPECTION.

49 THE MECHANICAL CONTRACTOR IS RESPONSIBLE FOR HIRING A THIRD PARTY HVAC AIR BALANCING CONTRACTOR TO BALANCE THE HVAC SYSTEM. THE CONTRACTOR IS TO BE AABC OR NEBB CERTIFIED, AND SHALL ADJUST AND BALANCE THE SYSTEM TO THE DESIGN AIR QUANTITIES INDICATED ON THESE DRAWINGS. WHEN FINISHED, THE BALANCING CONTRACTOR SHALL PROVIDE A WRITTEN REPORT IN THE APPLICABLE FORMAT TO THE OWNER AND THE AUTHORITY HAVING JURISDICTION FOR REVIEW, AND TWO COPIES SHALL BE PROVIDED TO THE ENGINEER FOR APPROVAL. ONE COPY SHALL BE RETAINED BY THE ENGINEERS FOR THEIR RECORDS.

50 ALL MATERIALS EXPOSED WITHIN DUCTS OR PLENUMS SHALL HAVE A FLAME-SPREAD INDEX OF NOT MORE THAN 25 AND A SMOKE DEVELOPED RATING OF NOT MORE THAN 50 WHEN TESTED IN ACCORDANCE WITH CURRENT STANDARDS FOR THE PROJECT JURISDICTION.

51 LABEL ALL EQUIPMENT WITH AN ENGRAVED PLASTIC (WHITE LETTERS ON BLACK BACKGROUND) LABEL BEARING THE EQUIPMENT NUMBER AS INDICATED ON THE EQUIPMENT SCHEDULES. LABEL ALL THERMOSTATS AND OTHER CONTROLS INDICATING THE EQUIPMENT SERVED.

52 SUBMITTALS:

PRODUCT DATA: WITHIN 7 CALENDAR DAYS AFTER RECEIVING THE OWNER'S NOTICE TO PROCEED, SUBMIT THE FOLLOWING:
1. MATERIALS LIST OF ALL ITEMS PROPOSED TO BE PROVIDED UNDER THIS SECTION WITH PER-UNIT COSTS.
2. MANUFACTURER'S SPECIFICATIONS AND OTHER DATA NEEDED TO PROVE COMPLIANCE WITH THE SPECIFIED REQUIREMENTS.
3. MANUFACTURER'S RECOMMENDED INSTALLATION PROCEDURES WHICH, WHEN APPROVED BY THE ARCHITECT/ENGINEER, WILL BECOME THE BASIS FOR ACCEPTING OR REJECTING ACTUAL INSTALLATION PROCEDURES USED ON THE WORK.

MANUAL
UPON COMPLETION OF THIS PORTION OF THE WORK AND AS A CONDITION OF ITS ACCEPTANCE, DELIVER TO THE ARCHITECT TWO COPIES OF AN OPERATION AND MAINTENANCE MANUAL OF ALL MECHANICAL EQUIPMENT INSTALLED. INCLUDE WITHIN EACH MANUAL:
1. A COPY OF THE APPROVED RECORD DOCUMENTS FOR THIS PORTION OF THE WORK.
2. A COPY OF ALL WARRANTIES AND GUARANTEES.

53 FOR ALL MECHANICAL SYSTEMS REQUIRING POWER, 120 V.A.C. AND ABOVE SHALL BE BY THE ELECTRICAL CONTRACTOR, 24 V.A.C. AND BELOW SHALL BE BY THE MECHANICAL CONTRACTOR.

REGISTERED PROFESSIONAL ENGINEER
DAVID E. FUSCO
M 029332
EXP. 06/30/14
MECHANICAL
STATE OF CALIFORNIA

MONTROSS & ASSOCIATES, INC.
CONSULTING SERVICES
3198-D2 AIRPORT LOOP DR.
COSTA MESA, CA 92626
(949) 553-9005 fax (949) 553-9007

all ideas, designs and plans represented by this drawing are the exclusive property of the withee malcolm partnership, architects, and shall not be reproduced in whole or in part without the express prior written permission of said architects, any unauthorized reuse of these plans other than for the project and location shown is prohibited.

job no.	A9041.109-P
drawn	
submittal	
Plan Check Submittal	03.27.2012
Plan Check Re-Submittal	10.29.2012
Issue For Bid	10.29.2012
revision	
△1 Client Revisions	10.23.2012

Tenant Improvements / Accessibility Upgrades for :
CITY OF TORRANCE
PERSONNEL BUILDING
3231 Torrance Boulevard, Torrance, CA 90503

OWNER : City of Torrance, Department of General Services
3350 Civic Center Drive, Torrance, CA 90503

WITHEE MALCOLM
ARCHITECTS, LLP
2251 W. 190th Street
Torrance, Ca 90504
t. 310.217.8885
f. 310.217.0425

general notes, legend, abbreviations & schedules
sheet title

M-1.0
sheet

BID SET ONLY

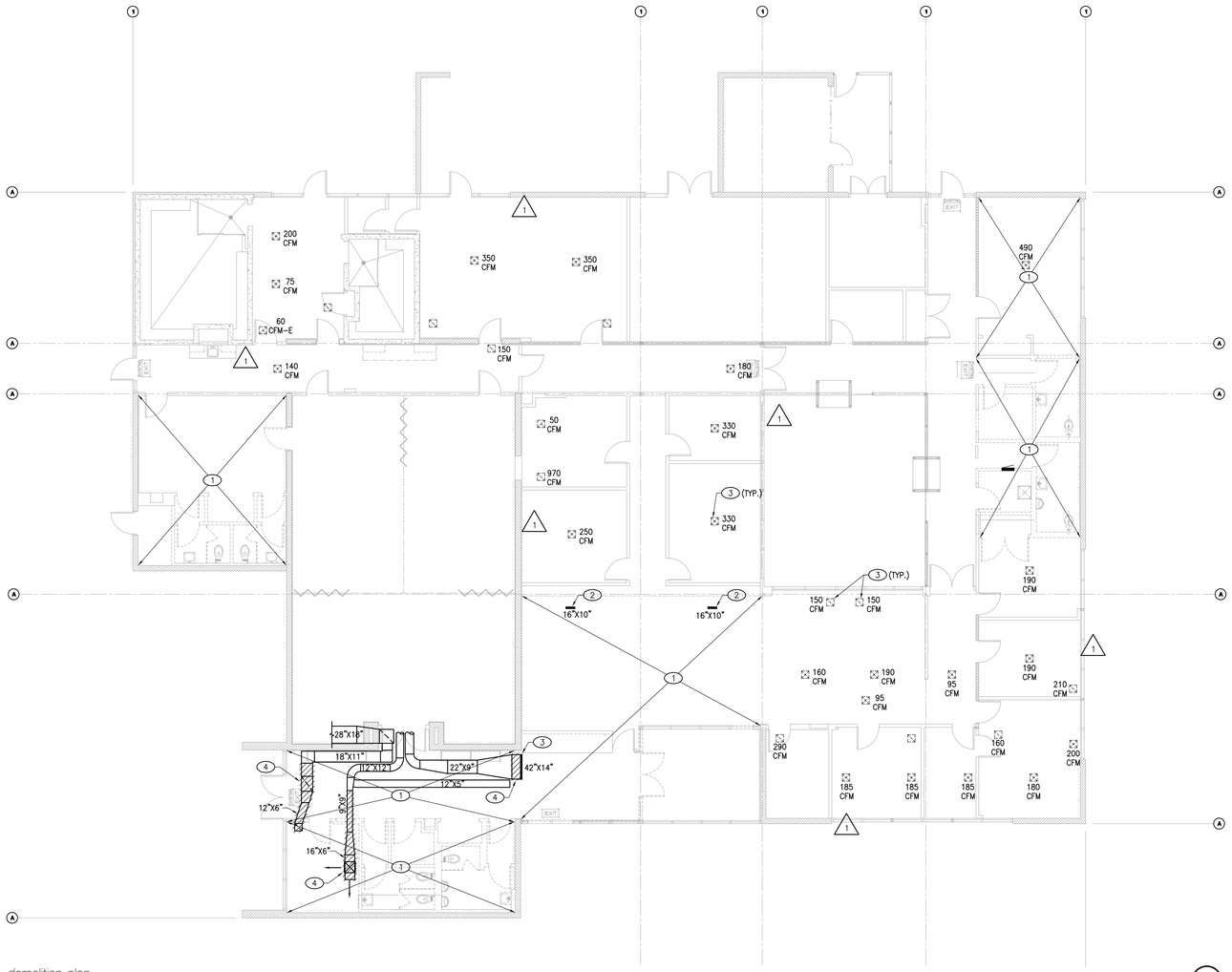

demolition plan
SCALE: 1/8"=1'-0"

1

NORTH

demolition keyed note

1. COMPLETELY CLEAR SPACE OF ALL MECHANICAL EQUIPMENT, DUCTS, LIGHTING GRILLES. AND FANS SERVING EXISTING RESTROOMS. ALL UNUSED EQUIPMENT SHALL BE OFFERED TO OWNER. DISCARD ALL REFUSED EQUIPMENT. VERIFY THAT ANY RESTROOMS THAT ARE TO REMAIN HAVE A NEW EXHAUST SYSTEM PER THE RECONSTRUCTION PLAN BEFORE REMOVING EXISTING EXHAUST SYSTEM.
2. EXISTING GRILLES SHALL BE REMOVED AND DISCARDED. SEE RECONSTRUCTION PLAN FOR NEW LOCATION.
3. REMOVE AND DISCARD SUPPLY/RETURN AIR GRILLE. EXISTING DUCT TO REMAIN FOR REUSE, SEE NEW PLAN.
4. REMOVE DUCT AND GRILLES SHOWN HATCHED.

job no.	A9041109-P
drawn	
submittal	
Plan Check Submittal	03.27.2012
Plan Check Re-Submittal	10.29.2012
Issue For Bid	10.29.2012
revision	
1 Client Revisions	10.23.2012

all ideas, designs and plans represented by this drawing are the exclusive property of the withee malcolm partnership, architects, and shall not be reproduced in whole or in part without the express prior written permission of said architects, any unauthorized reuse of these plans other than for the project and location shown is prohibited.

Tenant Improvements / Accessibility Upgrades for :

CITY OF TORRANCE

PERSONNEL BUILDING

3231 Torrance Boulevard, Torrance, CA 90503

OWNER : City of Torrance, Department of General Services
3350 Civic Center Drive, Torrance, CA 90503

WITHEE MALCOLM ARCHITECTS, LLP

2251 W. 190th Street
Torrance, Ca 90504
t. 310.217.8885
f. 310.217.0425

REGISTERED PROFESSIONAL ENGINEER
DAVID E. FUSCO
M 029332
EXP. 06/30/14
MECHANICAL
STATE OF CALIFORNIA

MONTROSE & ASSOCIATES, INC.
CONSULTING SERVICES
3198-02 AIRPORT LOOP DR.
COSTA MESA, CA 92626
(949) 553-9005 fax (949) 553-9007

demolition plan

sheet title

M-1.1

sheet

BID SET ONLY

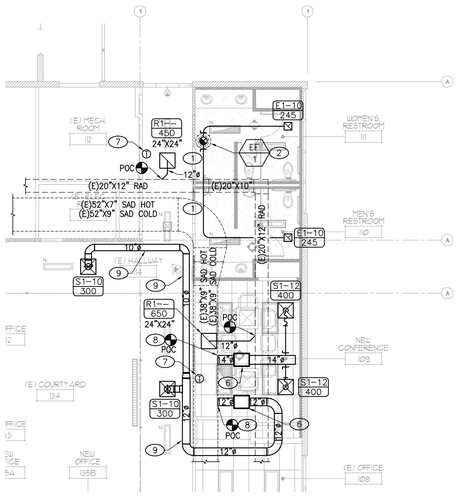

partial alternate hvac plan (2)
SCALE: 1/8"=1'-0"

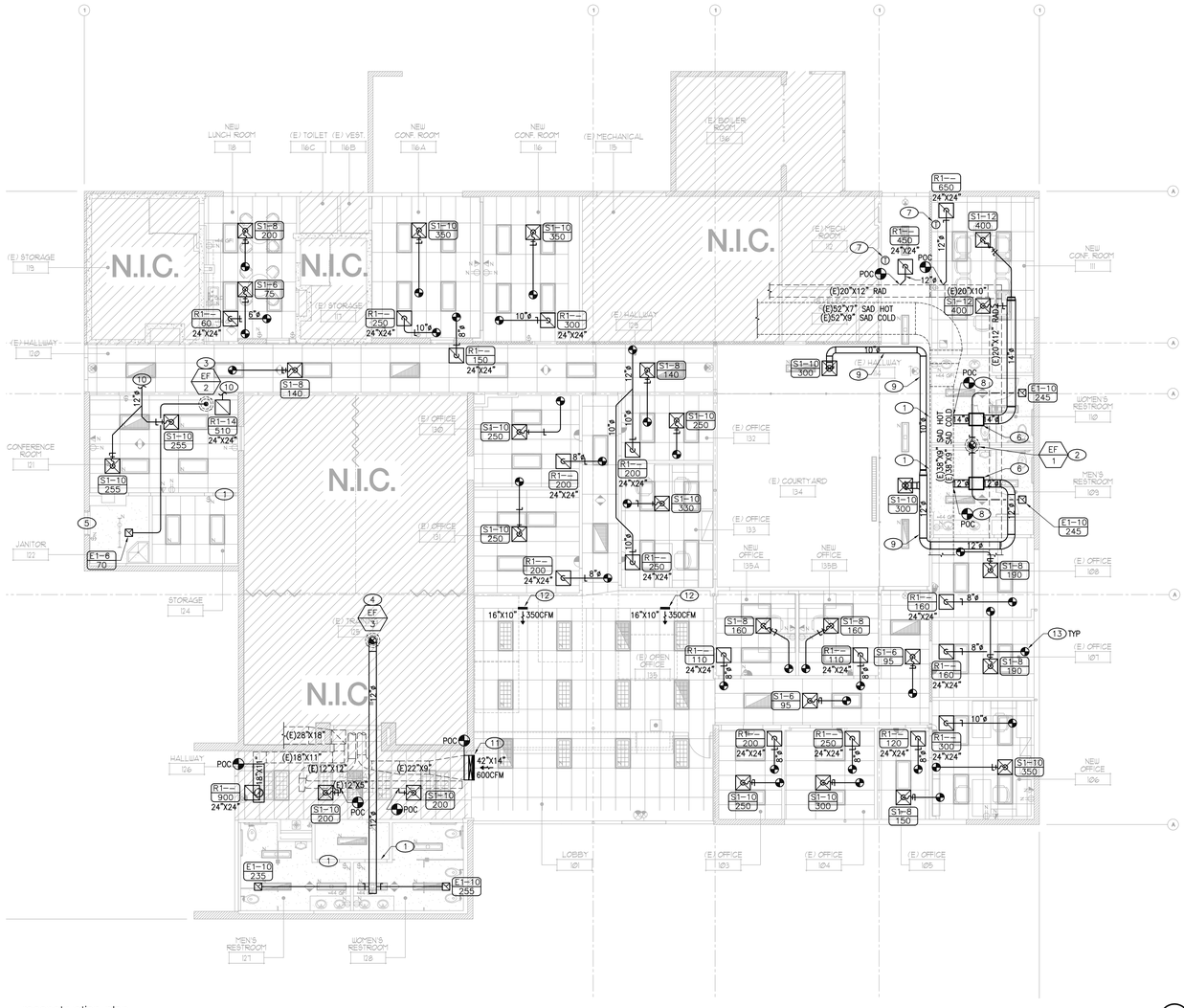

reconstruction plan (1)
SCALE: 1/8"=1'-0"

scale: 1/8" = 1'-0"
0 8 16 24 32
NORTH

KEYED NOTES

1. PROVIDE 18"x10" KRUEGER 600A DOOR GRILLE. COORDINATE FINISH AND EXACT LOCATION IN DOOR WITH ARCHITECT.
2. EXTEND 12"ø EXHAUST DUCT UP TO EF/1 ON ROOF. PROVIDE ANY TRANSITIONS OR ACCESSORIES NEEDED TO CONNECT DUCTWORK TO EXHAUST FAN. COORDINATE EXACT LOCATION OF FAN AND DUCT RISER IN FIELD. FAN LOCATION SHOWN IS APPROXIMATE. LOCATE FAN IN SAME LOCATION AS OLD FAN THAT IS BEING REMOVED IF POSSIBLE.
3. EXTEND 6"ø EXHAUST DUCT UP TO EF/2 ON ROOF. PROVIDE ANY TRANSITIONS OR ACCESSORIES NEEDED TO CONNECT DUCTWORK TO EXHAUST FAN. COORDINATE EXACT LOCATION OF FAN AND DUCT RISER IN FIELD.
4. EXTEND 12"ø EXHAUST DUCT UP TO EF/3 ON ROOF. PROVIDE ANY TRANSITIONS OR ACCESSORIES NEEDED TO CONNECT DUCTWORK TO EXHAUST FAN. COORDINATE EXACT LOCATION OF FAN AND DUCT RISER IN FIELD.
5. PROVIDE 8"x6" KRUEGER 600A DOOR GRILLE. COORDINATE FINISH AND EXACT LOCATION IN DOOR WITH ARCHITECT.
6. PROVIDE MIXING BOX TO MATCH MANUFACTURE/TYPE OF EXISTING BOXES. FIELD VERIFY. PROVIDE REQUIRED AIR VOLUME.
7. PROVIDE THERMOSTAT TO MATCH MANUFACTURE/TYPE OF EXISTING BUILDING CONTROLS. FIELD VERIFY.
8. DUCT CONNECTION TO HOT AND COLD SAD WITH CONNECTION TO NEW MIXING BOX.
9. EXPOSE DUCT ON ROOF SHALL BE INSULATED PER DUCT INSULATION SCHEDULE ON SHEET M1.0.
10. CONNECT EXISTING SUPPLY/RETURN DUCT TO NEW SUPPLY DIFFUSER/RETURN GRILLE. IF NO BALANCING DAMPER EXISTS PROVIDE ONE. BALANCE AIR AS CLOSE TO CFM LISTED IN DIFFUSER/GRILLE TAG AS POSSIBLE.
11. PROVIDE NEW REGISTERS 6 INCHES BELOW NEW CEILING HEIGHT. EXTEND DUCTWORK TO NEW LOCATION. SEE ARCHITECTURAL PLANS FOR NEW CEILING HEIGHT.
12. PROVIDE NEW GRILLES 6 INCHES BELOW NEW CEILING HEIGHT. EXTEND DUCTWORK TO NEW LOCATION. SEE ARCHITECTURAL PLANS FOR NEW CEILING HEIGHT.
13. PROVIDE NECK SIZE BRANCH DUCT AND CONNECT TO EXISTING SUPPLY/RETURN DUCT REMAINING FROM DEMOLITION. FIELD VERIFY LOCATION, SIZE AND ALL ROUTING IN FIELD. PROVIDE NEW BALANCE DAMPER FOR EACH SUPPLY/RETURN GRILLE.

GENERAL NOTES

1. OSA INTAKE SHALL BE AT LEAST 10'-0" AWAY FROM ANY ROOF EXHAUST OUTLET OR VENT.
2. DUCT SIZES INDICATED ARE INSIDE DIMENSIONS WHICH MAY BE ALTERED BY CONTRACTOR TO OTHER DIMENSIONS TO AVOID INTERFERENCES AND CLEARANCE REQUIREMENTS. USE EQUAL FRICTION METHOD (.08" W.C. PER 100' OF LINEAR DUCT) TO ESTABLISH ALTERNATIVE DUCT SIZE.
3. VERIFY ALL DIMENSIONS AT THE SITE. MAKE ALL FIELD MEASUREMENTS AND SHOP DRAWINGS NECESSARY FOR FABRICATION AND ERECTION OF SHEET METAL WORK. MAKE ALLOWANCES FOR BEAMS, PIPES OR OTHER OBSTRUCTION AND FOR WORK BY OTHER TRADES, AND NOTIFY THE ARCHITECT IN THE EVENT OF ANY POTENTIAL INTERFERENCES. MAKE AN INITIAL VERIFICATION OF BEAM PENETRATIONS SHOWN ON STRUCTURAL DRAWINGS.
4. ALL ELBOWS IN RECTANGULAR DUCT SHALL BE RADIUS ELBOWS ONLY WITH MINIMUM RADIUS OF 1.5 X DUCT WIDTH UNLESS SPACE REQUIREMENTS ARE PROHIBITIVE. IF RADIUS ELBOWS CANNOT BE USED ELBOWS MUST HAVE TURNING VANES.
5. RECTANGULAR DUCT SIZES SHOWN ARE CLEAR INSIDE DIMENSIONS. INCREASE DUCT SIZE TO ACCOMMODATE INTERNAL DUCT LINING AS REQUIRED. SEE DUCT INSULATION SCHEDULE.
6. ALL DIFFUSERS TO HAVE INTEGRAL OPPOSED-BLADE DAMPERS IN ADDITION TO THE BALANCING DAMPERS AT TAKE-OFF FROM MAIN SUPPLY AIR DUCT TRUNK.
7. IF ANY MANUAL VOLUME DAMPER SHOWN CANNOT BE EASILY ACCESSED, CONTRACTOR TO PROVIDE REMOTE VOLUME DAMPER FOR EASY ADJUSTMENTS.
8. UNLESS INDICATED ON PLAN, ALL CEILING DIFFUSER AND GRILLE RUN-OUTS SHALL BE SAME SIZE AS DIFFUSER'S AND GRILLE'S NECK SIZES.
9. ALL T-STATS SHALL BE 7-DAY PROGRAMMABLE, HAVE NIGHT SETBACK CAPABILITIES, AND BE MOUNTED AT 4'-0" A.F.F.

all ideas, designs and plans represented by this drawing are the exclusive property of the withee malcolm partnership, architects, and shall not be reproduced in whole or in part without the express prior written permission of said architects, any unauthorized reuse of these plans other than for the project and location shown is prohibited.

job no.	A9041.09-P
drawn	
submittal	
Plan Check Submittal	03.27.2012
Plan Check Re-Submittal	10.29.2012
Issue For Bid	10.29.2012
revision	
1 Client Revisions	10.23.2012

Tenant Improvements / Accessibility Upgrades for :
CITY OF TORRANCE
PERSONNEL BUILDING
3231 Torrance Boulevard, Torrance, CA 90503

OWNER : City of Torrance, Department of General Services
3350 Civic Center Drive, Torrance, CA 90503

WITHEE MALCOLM ARCHITECTS, LLP
2251 W. 190th Street
Torrance, Ca 90504
t. 310.217.8885
f. 310.217.0425

REGISTERED PROFESSIONAL ENGINEER
DAVID E. FUNK
M 029332
EXP. 06/30/14
MECHANICAL
STATE OF CALIFORNIA

MONTROSS & ASSOCIATES, INC.
CONSULTING SERVICES
3186-D2 AIRPORT LOOP DR.
COSTA MESA, CA 92626
(949) 553-9005 fax (949) 553-9007

sheet title
reconstruction plan

sheet
M-2.0

BID SET ONLY

1. NEOPRENE SEAL BETWEEN CURB & FAN BASE. ATTACH BASE TO CURB W/8 EVENLY SPACED BOLTS.
2. FACTORY FURNISHED ROOF CURB
3. DUCT.
4. BACKDRAFT DAMPER.
5. FAN SUPPORT.
6. EXHAUST FAN
7. BASE FLASH & CANT

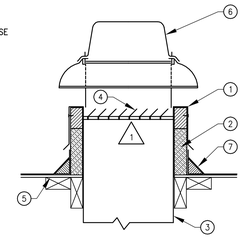

FAN MOUNTING

SCALE: NONE

4 / M3.0

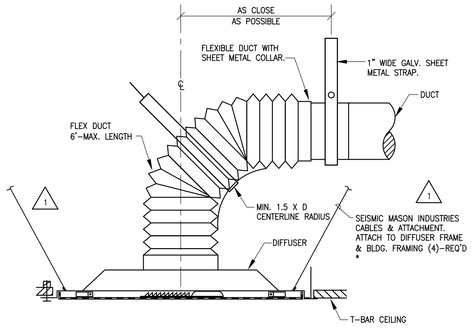

* INSTALL PER ASCE 7-05, SECTION 12.5.6.2.2, AND ASTM STANDARD C-635, -636 AND THE CISCA. IN LIEU OF THIS, A 12 GA. GALV. STEEL WIRE MAY BE POSITIVELY ATTACHED FROM THE DIFFUSER (GRILLE, ETC.) AND TO THE STRUCTURE ABOVE.

DIFFUSER INSTALLATION DETAIL

SCALE: NONE

1 / M3.0

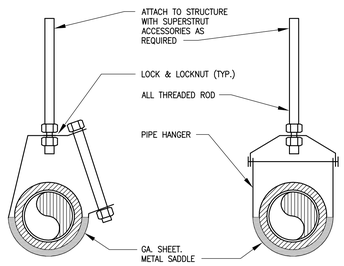

PIPE HANGER DETAIL

SCALE: NONE

5 / M3.0

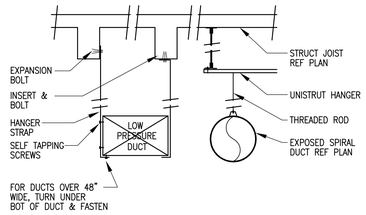

DUCT SIZE	HANGER SIZE	MAX. SPACING
UP THRU 2 SQ.FT.	1" x 1/16"	8'-0"
2 THRU 4 SQ.FT.	1" x 1/8"	8'-0"
4 THRU 10 SQ.FT.	1" x 1/8"	6'-0"
OVER 10 SQ.FT.	1" x 1/8"	4'-0"

DUCT HANGING DETAIL

SCALE: NONE

2 / M3.0

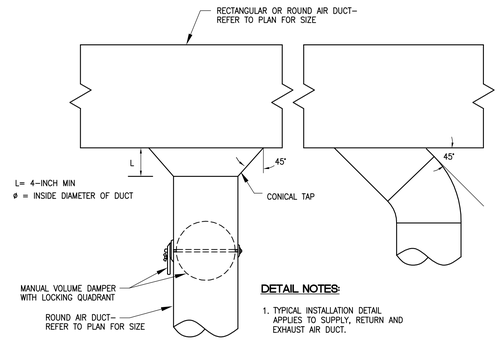

DETAIL NOTES:

1. TYPICAL INSTALLATION DETAIL APPLIES TO SUPPLY, RETURN AND EXHAUST AIR DUCT.

ROUND BRANCH DUCT TAKEOFF

SCALE: NONE

3 / M3.0

all ideas, designs and plans represented by this drawing are the exclusive property of the withee malcolm partnership, architects, and shall not be reproduced in whole or in part without the express prior written permission of said architects, any unauthorized reuse of these plans other than for the project and location shown is prohibited.

job no.	A9041.109-P
drawn	
submittal	
Plan Check Submittal	03.27.2012
Plan Check Re-Submittal	10.29.2012
Issue For Bid	10.29.2012
revision	
1 Client Revisions	10.23.2012

Tenant Improvements / Accessibility Upgrades for :

CITY OF TORRANCE

PERSONNEL BUILDING

3231 Torrance Boulevard, Torrance, CA 90503

OWNER : City of Torrance, Department of General Services
3350 Civic Center Drive, Torrance, CA 90503

WITHEE MALCOLM ARCHITECTS, LLP

2251 W. 190th Street
Torrance, Ca 90504
t. 310.217.8885
f. 310.217.0425

REGISTERED PROFESSIONAL ENGINEER
DAVID E.
M 029332
EXP. 06/30/14
MECHANICAL
STATE OF CALIFORNIA

MONTROSS & ASSOCIATES, INC.
CONSULTING SERVICES
3198-D2 AIRPORT LOOP DR.
COSTA MESA, CA 92626
(949) 553-9005 fax (949) 553-9007

details

sheet title

M-3.0

sheet

BID SET ONLY

LIGHTING FIXTURE SCHEDULE

FIXTURE						LAMPS			MOUNTING					
TYPE	MH	INC.	FLUOR.	MERC.	H.P.S.	VOLTS	NUMBER	WATTS AND TYPE	REC./LAY-IN	CLG.	PEND.	WALL	CHAIN-HUNG	DESCRIPTIONS AND VARIATIONS
F1			X			120	2	32W F032T8	X					1'X4' RECESSED FLUORESCENT LIGHT FIXTURE, COMPLETE WITH FLANGE KIT FOR MOUNTING IN HARD CEILING, ACRYLIC LENS, ELECTRONIC BALLAST. LITHONIA #SP8F-232-A12125-120-GEB
F1E			X			120	2	32W F032T8	X					SAME FIXTURE AS TYPE F1, WITH 1400 LUMEN, (90) MINUTE (MIN.) EMERGENCY BATTERY PACK. FIXTURE IS TO REMAIN SWITCHABLE. LITHONIA #SP8F-232-A12125-120-GEB-EL14
F2			X			120	1	26W 26TRT (CFL)	X					6" DIAMETER RECESSED DOWNLIGHT, COMPLETE WITH LENS, WHITE TRIM, ELECTRONIC BALLAST. LITHONIA #LI6F-26TRT-6L4-120-TRW
F3			X			120	2	32W F032T8		X				4' STRIP LIGHT WITH ELECTRONIC BALLAST. LITHONIA #C-232-120-GEB
F4			X			120	3	32W F032T8	X					2'X4' RECESSED FLUORESCENT LIGHT FIXTURE, COMPLETE WITH PRISMATIC ACRYLIC LENS, ELECTRONIC BALLAST. LITHONIA #2SP8G-332-A12125-120-1/2GEB-1/1GEB
F4E			X			120	3	32W F032T8	X					SAME FIXTURE AS TYPE F4, WITH 1400 LUMEN, (90) MINUTE (MIN.) EMERGENCY BATTERY PACK. FIXTURE IS TO REMAIN SWITCHABLE. LITHONIA #2SP8G-332-A12125-120-1/2GEB-1/1GEB-EL14
F5														(not used)
EX			X			120		INCLUDED W/ FIXTURE		X				PROVIDE NEW EXIT SIGN TO MATCH BUILDING STANDARD. WHITE THERMOPLASTIC HOUSING WITH GREEN LETTERS.
F6			X			120	2	32W F32T8		X				1X4 SURF WRAP FLUORESCENT FIXTURE, WITH ELECTRONIC BALLAST LITHONIA #AW-232-MVOLT-GEB10IS
F6E			X			120	2	32W F32T8		X				SAME AS FIXTURE TYPE F6, WITH 1400 LUMEN, (90)MINUTE (MIN.) EMERGENCY BATTERY PACK. FIXTURE TO REMAIN SWITCHABLE. LITHONIA #AW-232-MVOLT-GEB10IS-EL14
F7			X			120	3	32W F32T8	X					2'x4' RECESSED FLUORESCENT LIGHT FIXTURE WITH (18)CELL PARABOLIC LENS, ELECTRONIC BALLASTS. LITHONIA #2PM3NGB-332-18-LS-MVOLT-GEB10IS (DOUBLE-SWITCHED)
F7E			X			120	3	32W F32T8	X					SAME AS FIXTURE TYPE F7, WITH 1400 LUMEN, (90)MINUTE (MIN.) EMERGENCY BATTERY PACK. (2)LAMPS TO BE SWITCHABLE. LAMP CONNECTED TO BATTERY TO OPERATE 24/7. LITHONIA #2PM3NGB-332-18-LS-MVOLT-GEB10IS-EL14

LIGHTING FIXTURE NOTES

1. CONTRACTOR SHALL TANDEM WIRE (1) LAMP OR (3) LAMP FLUORESCENT LIGHT FIXTURES WHENEVER FIXTURE IS RECESSED MOUNTED AND WITHIN 10' OF EACH OTHER OR IS SURFACE OR PENDANT MOUNTED WITHIN 1' OF EACH OTHER.
2. ELECTRICAL CONTRACTOR SHALL PROVIDE ALL HARDWARE REQUIRED FOR COMPLETE INSTALLATION, WHETHER OR NOT INDICATED BY FIXTURE CATALOG NUMBER. REFER TO ELECTRICAL SPECIFICATIONS.
3. ALL LIGHT FIXTURES MOUNTED IN WET OR DAMP LOCATION TO CARRY APPROPRIATE U.L. LABEL.
4. ALL FLUORESCENT FIXTURES SHALL HAVE ENERGY SAVING C.E.C. APPROVED T8 LAMPS AND ELECTRONIC BALLASTS.
5. WHERE APPLICABLE, RECESSED INCANDESCENT AND H.I.D. FIXTURES ARE TO BE USED WITH BATT-TYPE INSULATION, CUT 3" MINIMUM AROUND FIXTURE AND ARE TO HAVE THERMAL PROTECTION.
6. CONTRACTOR TO PROVIDE ALL LAMPS NOT FURNISHED WITH FIXTURES.
7. FOR ANY DEVIATION FROM SPECIFIED LIGHT FIXTURES AND EQUIPMENT, IT WILL BE THE SOLE RESPONSIBILITY OF THE CONTRACTOR TO GUARANTEE LIGHT LEVELS PROVIDED IN THE ORIGINAL DESIGN.
8. ELECTRICAL ENGINEER IS NOT RESPONSIBLE FOR TYPE OF CEILING BEING INSTALLED. REFER TO ARCHITECTURAL PLANS FOR EXACT CEILING TYPE. CONTRACTOR SHALL VERIFY CEILING TYPE / FIXTURE COMPATIBILITY BEFORE ORDERING FIXTURES.
9. IT IS UNDERSTOOD BY ALL PARTIES THAT ANY SUBSTITUTIONS OF SPECIFIED PRODUCTS ARE DONE FOR THE PURPOSE OF COST SAVINGS TO THE OWNER. THEREFORE, ANY MATERIAL SUBSTITUTIONS OR DEVIATIONS PROPOSED BY THE CONTRACTOR SHALL BE INCLUDED WITH THE INITIAL BID AND SHALL SHOW A LINE ITEM CREDIT TO THE OWNER FOR EACH ITEM SUBSTITUTED IN LIEU OF SPECIFIED PRODUCTS.
10. PROVIDE ALL EXIT SIGNS WITH DIRECTIONAL ARROWS AS REQUIRED.
11. ALL FLUORESCENT FIXTURES SHALL COMPLY WITH NEC 410.73(G) FOR BALLAST DISCONNECTING MEANS.

ABBREVIATIONS

A	AMP
ABV	ABOVE
AC	ASPHALTIC CONCRETE
AF	AMPERE FUSE
AFF	ABOVE FINISHED FLOOR
AGB	ANTENNA GROUND BUS
AWG	AMERICAN WIRE GAGE
BC	BARE COPPER
BLDG.	BUILDING
BLW	BELOW
BTWN	BETWEEN
C	CONDUIT
CB	CIRCUIT BREAKER
CLG	CEILING
C.O.	CONDUIT ONLY
CONC.	CONCRETE
CONN.	CONNECT/CONNECTION
CT	CABLE TRAY
CW	COLD WATER
DN	DOWN
DS	DISCONNECT SWITCH
DIST	DISTRIBUTION
EC	ELECTRICAL CONTRACTOR
ELEC.	ELECTRIC(AL)
EQPT	EQUIPMENT
EMT	ELECTRIC-METALLIC TUBING
EWC	ELECTRIC WATER COOLER
EXIST	EXISTING
(E),E	EXISTING
FLR	FLOOR
GA	GAUGE
GALV	GALVANIZED
GND	GROUND
GFI	GROUND FAULT CIRCUIT INTERRUPTER
H	HIGH
HV	HIGH VOLTAGE
I_{sc}	SHORT CIRCUIT CURRENT
KVA	KILOVOLT AMPERE
LTG	LIGHTING
LV	LOW VOLTAGE
MAX.	MAXIMUM
MC	MECHANICAL CONTRACTOR
MFR.'S	MANUFACTURER'S
MGB	MASTER GROUND BUS
MIN.	MINIMUM
MTD	MOUNTED
MTTB	MAIN TELEPHONE TERMINAL BOARD
MTS	MANUAL TRANSFER SWITCH
NEC	NATIONAL ELECTRICAL CODE
NO	NUMBER
(N), N	NEW
NTS	NOT TO SCALE
OC	ON CENTER
OHE	OVERHEAD ELECTRICAL
PTDF	PRESSURE TREATED DOUGLAS FIR
P	POLE
PB	PULL BOX
RAD	RADIUS
RQT'S	REQUIREMENTS
RCPT	RECEPTACLE
SCE	SOUTHERN CALIFORNIA EDISON
S/N	SOLID NEUTRAL
S/G	SOLID GROUND
SHT MTL	SHEET METAL
SIM	SIMILAR
SP	SURGE PROTECTOR
SPC	SPACE
STL	STEEL
STR	STRANDED
SWD	SWITCH DUTY
SWTBRD	SWITCHBOARD
TELCO	TELEPHONE COMPANY
TEL./TELE.	TELEPHONE
THK	THICK
THW	WIRE INSULATION: MOISTURE AND HEAT-RESISTANT THERMOPLASTIC
TYP	TYPICAL
UG	UNDERGROUND
UL	UNDERWRITERS LABORATORY
UNO	UNLESS NOTED OTHERWISE
UGPS	UNDERGROUND PULL SECTION
W	WIRE/WATT
W/	WITH
WP	WEATHERPROOF
XFR	TRANSFER
XFMR	TRANSFORMER

LEGEND

Symbol	Description
	FLOOR-STANDING SWITCHBOARD
ATS	AUTOMATIC TRANSFER SWITCH
MTS	MANUAL TRANSFER SWITCH
TA	TRANSFORMER "TA"
1	KEYED NOTE "1"
Ø	PHASE
F1 / 100	LIGHTING FIXTURE CALL OUT: FIXTURE TYPE 'F1', 100 WATTS MAXIMUM. REFER TO LIGHTING FIXTURE SCHEDULE
XX / 1	EQUIPMENT AS NOTED ON PLAN
A	PANELBOARD DESIGNATION – PANEL "A"
	FLUSH MOUNTED PANELBOARD, DOOR INDICATES FACE
	SURFACE MOUNTED PANELBOARD, DOOR INDICATES FACE
M	METER
200AS 150AF 3P	FUSED DISCONNECT SWITCH AS = AMPERE SWITCH AF = AMPERE FUSES 3P = NUMBER OF POLES
60AF 60AT 3P	CIRCUIT BREAKER AF = AMPERE FRAME AT = AMPERE TRIP 3P = NUMBER OF POLES
GFI	GROUND FAULT INTERRUPTER– TO CONTROL SHUNT TRIP CIRCUIT BREAKER OR SWITCH
	TRANSFORMER
	GROUND CONNECTION
	CONDUIT TURNED DOWN OR AWAY
	CONDUIT TURNED UP OR TOWARD
	EMERGENCY LIGHT FIXTURE WITH (90) MINUTE BATTERY (MINIMUM)
D	FLUORESCENT FIXTURE–SURFACE OR FLANGE MOUNTED ON HARD CEILING D = DIMMABLE BALLAST
	2x4 FLUORESCENT FIXTURE–LAY IN
	2x2 FLUORESCENT FIXTURE–LAY IN
	FLUORESCENT STRIP LIGHT FIXTURE
	WALL MOUNTED FIXTURE
NL	FLUORESCENT FIXTURE WITH 90 MINUTE (MINIMUM) EMERGENCY BATTERY BALLAST, 1400 LUMEN OUTPUT (MINIMUM). (2) LAMP FIXTURE = BATTERY CONNECTED TO BOTH LAMPS. (3) LAMP FIXTURE = BATTERY CONNECTED TO CENTER LAMP ONLY. NL = LAMPS CONNECTED TO BATTERY ARE TO OPERATE (24) HOURS AS A NIGHT LIGHT. OTHER LAMPS IN FIXTURE TO REMAIN SWITCHABLE. NO DESIGNATION = LAMPS CONNECTED TO BATTERY ARE TO REMAIN SWITCHABLE, BUT OPERATE AT A LOSS OF POWER REGARDLESS OF SWITCH POSITION.
	FIXTURE WITH TANDEM WIRE WHIP, MASTER/SLAVE BALLAST
	EXIT SIGN, SHADED SECTOR DENOTES FACE, ARROW INDICATES CHEVRON DIRECTION
F	COMBINATION CEILING FAN AND LIGHT
	TRACK LIGHTING
	SURFACE MOUNTED FIXTURE
	PENDANT FIXTURE
	RECESSED DOWN LIGHT
NL	RECESSED FLUORESCENT DOWNLIGHT FIXTURE WITH (90) MINUTE (MINIMUM) EMERGENCY BATTERY BALLAST, 1300 LUMEN OUTPUT (MINIMUM). NL = FIXTURE TO OPERATE (24) HOURS AS A NIGHT LIGHT NO DESIGNATION = LAMPS CONNECTED TO BATTERY ARE TO REMAIN SWITCHABLE, BUT OPERATE AT A LOSS OF POWER REGARDLESS OF SWITCH POSITION.
	RECESSED WALL WASH LIGHT FIXTURE
$	TOGGLE SWITCH, +48" AFF
$D	D = DIMMER SWITCH
$WP	WP = WEATHERPROOF SWITCH
$M	M = MOTOR RATED SWITCH WITH THERMAL OVERLOADS
$3	3 = 3-WAY SWITCH
$4	4 = 4-WAY SWITCH
$P	P = PILOT LIGHT SWITCH (GLOWS WHEN "ON")
$L	L = LIGHTED TOGGLE SWITCH (GLOWS WHEN "OFF")
$K	K = KEYED SWITCH
$T	T = TIMER SWITCH (0-2 HOURS, UNLESS NOTED OTHERWISE)
$abc	abc= INDICATES QUANTITY OF SWITCHES
	MAIN TELEPHONE TERMINAL BOARD 'MTTB" OR AS IDENTIFIED
J	JUNCTION BOX
J	JUNCTION BOX, CEILING MOUNTED
T	THERMOSTAT: PROVIDE 4S BOX WITH (1) GANG MUD RING, +48"AFF, WITH 3/4"C.O. STUBBED UP INTO ACCESSIBLE CEILING SPACE.
S	SPEAKER
P	POWER POLE
	CABLE TRAY OR BUS DUCT SUPPORTED FROM STRUCTURE ABOVE. SPECIFICATION AS NOTED ON PLAN
	DUPLEX RECEPTACLE: NEMA 5-15R, 125V, + 18"AFF
	DUPLEX RECEPTACLE: NEMA 5-15R, 125V, + 18"AFF, 1/2 SWITCHED
	DUPLEX GFCI RECEPTACLE: NEMA 5-15R, 125V, +18"AFF
	DUPLEX AFCI RECEPTACLE: NEMA 5-15R, 125V, +18"AFF
	QUAD RECEPTACLE: NEMA 5-15R, 125V, +18"AFF
	DEDICATED CIRCUIT DUPLEX RECEPTACLE: NEMA 5-20R, 125V, +18"AFF.
	DEDICATED CIRCUIT DUPLEX GFCI RECEPTACLE: NEMA 5-20R, 125V, +44"AFF
	ISOLATED GROUND DUPLEX RECEPTACLE: NEMA 5-20R, 125V, WITH ORANGE FACE. PROVIDE ISOLATED GROUND CONDUCTOR BACK TO PANEL. +18"AFF
	CLOCK RECEPTACLE: NEMA 5-15R, 125V, + 7'-6"AFF
	DUPLEX RECEPTACLE: NEMA 5-15R, 125V, MOUNTED IN FLUSH FLOOR BOX WITH HINGED, BRUSHED METAL COVER, OR AS SPECIFIED.
	QUAD RECEPTACLE: NEMA 5-15R, 125V, MOUNTED IN FLUSH FLOOR BOX WITH HINGED, BRUSHED METAL COVER, OR AS SPECIFIED.
	DUPLEX RECEPTACLE: NEMA 5-15R, 125V, CEILING MOUNTED
D	DEDICATED CIRCUIT DUPLEX RECEPTACLE: NEMA 5-20R, 125V, CEILING MOUNTED
	MULTI-RECEPTACLE RACEWAY
TL	RECEPTACLE: 250V, 1Ø, 20A NEMA 6-20R, +18" AFF TL = TWIST LOCK RECEPTACLE
TL	RECEPTACLE: 250V, 3Ø, 20A NEMA 15-20R, +18" AFF TL = TWIST LOCK RECEPTACLE
TL	RECEPTACLE: 125V, 1Ø, 30A NEMA 5-30R, +18"AFF TL = TWIST LOCK RECEPTACLE
TL	RECEPTACLE: 250V, 1Ø, 30A NEMA 6-30R, +18"AFF TL = TWIST LOCK RECEPTACLE
TL	RECEPTACLE: 250V, 3Ø, 30A NEMA 15-30R, +18" AFF TL = TWIST LOCK
	DRYER RECEPTACLE: 125/250V, 1Ø, 4W, 30A NEMA 14-30R, +48" AFF
	RECEPTACLE: VOLTAGE AND NEMA CONFIGURATION AS SPECIFIED IN KEYED NOTES.
	TELEPHONE OUTLET: 4SD BOX WITH 1-GANG MUD RING, +18"AFF, WITH 1" C.O. STUBBED UP INTO ACCESSIBLE CEILING SPACE.
	DATA OUTLET: 4SD BOX WITH 1-GANG MUD RING, +18"AFF, WITH 1" C.O. STUBBED UP INTO ACCESSIBLE CEILING SPACE.
	COMBINATION TELEPHONE/DATA OUTLET: 4SD BOX WITH 1-GANG MUD RING, +18"AFF, WITH 1" C.O. STUBBED UP INTO ACCESSIBLE CEILING SPACE.
	TELEPHONE, DATA OR COMBINATION OUTLET, MOUNTED IN FLUSH FLOOR BOX WITH HINGED, BRUSHED METAL COVER, OR AS SPECIFIED, WITH 3/4" (MIN.) C.O. STUBBED UP INTO ACCESSIBLE CEILING SPACE AT NEAREST WALL.
	CABLE TV OUTLET: 4SD BOX WITH 1-GANG MUD RING, +18" AFF, WITH 1"C.O. STUBBED UP INTO ACCESSIBLE CEILING SPACE.
	CABLE TV OUTLET 4SD CEILING BOX WITH 1-GANG MUD RING WITH 1"C.O. STUBBED UP INTO ACCESSIBLE CEILING SPACE.
	CEILING MOUNT OCCUPANCY SENSOR-ONE WAY
	CEILING MOUNT OCCUPANCY SENSOR-TWO WAY
	WALL MOUNTED OCCUPANCY SENSOR-ONE LEVEL SWITCHING, DUAL TECHNOLOGY
	WALL MOUNTED OCCUPANCY SENSOR-TWO LEVEL SWITCHING, DUAL TECHNOLOGY
60/2/F,NF	FUSED DISCONNECT SWITCH (60A SWITCH/ TWO POLE/F=FUSED, NF=NON-FUSED)
	MOTOR STARTER SWITCH WITH HOA SWITCH AND MOTOR OVERLOAD PROTECTION
	MOTOR, MOTOR CONNECTION
	1/2 " CONDUIT W/2#12 AWG, 1#12 GREEN GROUND WIRE
1LA-1,3	CONDUIT HOMERUN TO PANEL '1LA', CIRCUITS #1 AND 3
	#12 UNGROUNDED CIRCUIT WIRE (HOT): NUMBER OF HATCH MARKS INDICATE NUMBER OF #12 AWG CONDUCTORS. #12 GROUNDED CIRCUIT WIRE (NEUTRAL) #12 GROUND WIRE #12 ISOLATED GROUND WIRE. FOR CLARITY, I.G. MARKS ARE SHOWN ON THE HOMERUN ONLY. CONTRACTOR SHALL MAINTAIN THE ISOLATED GROUND CONDUCTOR TO THE FINAL CONNECTION OF ANY DEVICE SERVED.
	FLEX CONDUIT CONNECTION
	UNDERGROUND/UNDERFLOOR CONDUIT
T	TELEPHONE CONDUIT
P	POWER CONDUIT
F	FIRE ALARM CONDUIT
C	CABLE TV CONDUIT
G	GROUND CONDUCTOR
S	SMOKE DETECTOR
H	HEAT DETECTOR
F	FIRE ALARM PULL STATION
H	FIRE ALARM HORN
	FIRE ALARM STROBE
H	COMBINATION HORN/STROBE
S/F	SMOKE FIRE DAMPER
FACP	FIRE ALARM CONTROL PANEL
ANNUN	FIRE ALARM ANNUNCIATOR PANEL
SEC	SECURITY SYSTEM CABINET
N	NURSE CALL BUTTON
E	STAFF EMERGENCY CALL BUTTON
B	CODE BLUE BUTTON

ELECTRICAL GENERAL NOTES

1. THE ENTIRE INSTALLATION SHALL CONFORM TO THE REQUIREMENTS OF THE 2010 CEC, STATE FIRE MARSHAL REGULATIONS, AND ALL OTHER ORDINANCES HAVING JURISDICTION.
2. THE CONTRACTOR SHALL OBTAIN AND PAY FOR ALL PERMITS AND INSPECTION REQUIREMENTS.
3. ELECTRICAL CONTRACTOR SHALL PROVIDE ALL LABOR, MATERIALS, INSURANCE, EQUIPMENT, INSTALLATION, CONSTRUCTION TOOLS, TRANSPORTATION, ETC. FOR A COMPLETE INSTALLATION AND PERFORM ALL STARTUP OF EQUIPMENT AND OPERATIONS NECESSARY OR INCIDENTAL TO PROPER EXECUTION AND COMPLETION OF ALL "ELECTRICAL WORK" WHETHER SPECIFICALLY MENTIONED OR NOT. MATERIALS AND EQUIPMENT PROVIDED BY OWNER WILL BE AS SPECIFICALLY NOTED. THIS SHALL INCLUDE TEMPORARY POWER FOR CONSTRUCTION.
4. ALL MATERIALS AND EQUIPMENT SHALL BE NEW AND IN PERFECT CONDITION WHEN INSTALLED AND SHALL BE OF THE BEST GRADE AND OF THE SAME MANUFACTURER THROUGHOUT FOR EACH CLASS OR GROUP OF EQUIPMENT. MATERIALS SHALL BE LISTED AND APPROVED BY UNDERWRITERS LABORATORY AND SHALL BEAR THE INSPECTION LABEL U.L. WHERE SUBJECT TO SUCH APPROVAL. NON UL EQUIPMENT SHALL HAVE THIRD PARTY CERTIFICATION AS APPROVED BY THE BUILDING DEPARTMENT.
5. IT SHALL BE THE CONTRACTOR'S RESPONSIBILITY TO VERIFY EXISTING CONDITIONS AND DIMENSIONS. HE SHALL ISSUE A WRITTEN NOTICE OF ALL FINDINGS TO THE OWNER LISTING ALL MALFUNCTIONS, FAULTY EQUIPMENT AND DISCREPANCIES.
6. ALL WIRING SHALL BE IN METALLIC CONDUIT. RIGID GALVANIZED CONDUIT SHALL BE USED IN OR UNDER CONCRETE SLABS ON GRADE, WHERE EXPOSED TO WEATHER, AND WHERE SUBJECT TO MECHANICAL DAMAGE. PVC SCHEDULE 40 IN CONCRETE OR SLURRY MAY BE USED. E.M.T. CONDUIT SHALL BE USED FOR INTERIOR WIRING WHERE NOT SUBJECT TO MECHANICAL DAMAGE. FLEXIBLE CONDUIT SHALL BE USED WHERE THE STRUCTURAL CONDITIONS MAKE THE USE OF E.M.T. IMPRACTICABLE, AND FOR SHORT CONNECTIONS TO LIGHTING FIXTURES AND WEATHERPROOF VIBRATING EQUIPMENT. USE NEOPRENE JACKETED FLEXIBLE CONDUIT AND FITTINGS WHERE EXPOSED TO WEATHER.
7. ALL CONDUCTORS SHALL BE COPPER AND RATED 600 VOLTS. SIZES NO. 10 AWG AND LARGER SHALL BE STRANDED AND NO. 12 AWG AND SMALLER SHALL BE SOLID. USE TYPE THHN/THWN/THW.
8. ALL CONDUIT PENETRATIONS THROUGH FIRE-RATED FLOOR SLABS, SHAFTS, AND WALLS, AND ANY BOXES INSTALLED IN FIRE-RATED WALLS, SHALL BE SEALED AGAINST THE SPREAD OF FIRE OR SMOKE WITH APPROVED CABLE AND CONDUIT FIRE STOPS OR FIRE-RESISTANT SEALANT TO GIVE THE EQUIVALENT FIRE RATING BEFORE THE PENETRATION.
9. VERIFY EXACT LOCATIONS AND MOUNTING HEIGHTS OF ALL OUTLETS WITH ARCHITECT AND OWNER PRIOR TO ROUGH-IN (MINIMUM HEIGHT TO BE +15" TO CENTER LINE).
10. PROVIDE NYLON PULL WIRES IN ALL TELEPHONE AND EMPTY CONDUITS.
11. PROVIDE SEPARATE GROUND WIRE IN ALL FLEX CONDUITS AND NONMETALLIC CONDUITS. METALLIC SEALTITE WITH GROUND RATING STAMPED ON THE INSULATION MAY BE USED.
12. THE CONTRACTOR SHALL MAINTAIN THE UNIFORMITY AND CONTINUITY OF THE GROUNDING SYSTEM.
13. E.C. SHALL VERIFY UTILITY COMPANY'S REQUIREMENT ON UTILITY'S CONDUIT, CABLE, VAULTS, HANDHOLE, ROUTING, UGPS, METER AND OTHER REQUIREMENTS AND INCLUDE ALL RELATED COSTS IN THE INITIAL BID PROPOSAL.
14. ALL RECEPTACLES WITHIN 6' OF A WATER SOURCE SHALL BE GFI PROTECTED. GFI EXPOSED TO WEATHER SHALL BE WEATHERPROOF.
15. ALL FIXTURE LAMPS AND BALLAST'S SHALL BE CALIFORNIA ENERGY COMMISSION APPROVED.
16. CIRCUIT-BREAKERS FOR LIGHTING CIRCUITS SHALL BE LISTED AND MARKED FOR SWITCHING DUTY (SWD).
17. SUBMITTALS
   A. PRODUCT DATA: WITHIN 7 CALENDAR DAYS AFTER THE CONTRACTOR HAS RECEIVED THE OWNER'S NOTICE TO PROCEED, SUBMIT THE FOLLOWING:
      1. MATERIALS LIST OF ITEMS PROPOSED TO BE PROVIDED UNDER THIS SECTION WITH PER UNIT COSTS.
      2. MANUFACTURER'S SPECIFICATIONS AND OTHER DATA NEEDED TO PROVE COMPLIANCE WITH THE SPECIFIED REQUIREMENTS.
      3. MANUFACTURER'S RECOMMENDED INSTALLATION PROCEDURES WHICH, WHEN APPROVED BY THE ARCHITECT, WILL BECOME THE BASIS FOR ACCEPTING OR REJECTING ACTUAL INSTALLATION PROCEDURES USED ON THE WORK.
   B. MANUAL: UPON COMPLETION OF THIS OPERATION OF THE WORK AND AS A CONDITION OF ITS ACCEPTANCE, DELIVER TO THE ARCHITECT TWO COPIES OF AN OPERATION AND MAINTENANCE MANUAL OF ALL ELECTRICAL EQUIPMENT INSTALLED. INCLUDE WITHIN EACH MANUAL:
      1. A COPY OF THE APPROVED RECORD DOCUMENTS FOR THIS PORTION OF THE WORK.
      2. A COPY OF ALL CIRCUIT DIRECTORIES.
      3. A COPY OF ALL WARRANTIES AND GUARANTEES.
18. ALL RECEPTACLES AND SWITCHES SHALL BE DECORA STYLE BY LEVITON WITH DECORA PLUS WALL PLATES (SCREWLESS). COLOR SELECTION BY ARCHITECT.
19. LOCATE ALL SWITCHES AND SWITCHBANKS AT 48" MAX AFF.
20. THE TERM "PROVIDE" MEANS CONTRACTOR IS TO FURNISH AND INSTALL MATERIALS INDICATED.
21. ALL TELEPHONE, DATA, TELEVISION, AND COMMUNICATION HOMERUNS SHALL BE TO THE NEAREST TELEPHONE CLOSET INDICATED UNLESS OTHERWISE NOTED.
22. ALL CONDUIT, J-BOX AND PULL BOXES SHALL BE CONCEALED IN FLOORS, WALLS OR CEILINGS UNLESS OTHERWISE NOTED.
23. THE E.C. SHALL MAKE POWER CONNECTIONS TO ALL MOTORS AND EQUIPMENT FURNISHED BY OTHERS.
24. ALL FINAL CONNECTIONS SHALL BE MADE BY ELECTRICAL CONTRACTOR.
25. PROVIDE CONTROL CONDUIT AND WIRE FROM THERMOSTAT TO HVAC EQUIPMENT BEING CONTROLLED.
26. ALL EQUIPMENT, MATERIALS, AND WIRING METHODS IN HAZARDOUS AREAS SHALL BE IN ACCORDANCE WITH NEC ARTICLES 500 THROUGH 514. ANY PORTION OF ELECTRICAL WIRING OF EQUIPMENT WHICH IS BELOW THE SURFACE OF A CLASS 1 LOCATION (AS DEFINED IN N.E.C. TABLE 514.2) SHALL BE CONSIDERED TO BE IN A CLASS 1 DIVISION 1 LOCATION, WHICH SHALL EXTEND AT LEAST TO THE POINT OF EMERGENCE ABOVE GRADE.
27. ELECTRICAL DRAWINGS ARE ESSENTIALLY DIAGRAMMATIC AND ALTHOUGH THE SIZE AND LOCATION OF EQUIPMENT ARE SHOWN TO SCALE WHEREVER POSSIBLE, ALL DIMENSIONS AND CONDUIT/CONDUCTOR DATA SHALL BE VERIFIED IN THE FIELD. E.C. SHALL PROVIDE AS BUILT DRAWINGS UPON COMPLETION OF CONSTRUCTION.
28. CONTRACTOR SHALL PERFORM ALL CUTTING AND PATCHING OF WALLS, CEILINGS, FLOORS, ETC., FOR INSTALLATION OF OUTLET BOXES, CONCEALED CONDUIT, ETC. ALL PATCHING SHALL MATCH SURROUNDING MATERIAL AND FINISH.
29. ALL EQUIPMENT SHALL BE GROUNDED IN ACCORDANCE WITH N.E.C. ARTICLE 250 AND 517. ALL CONDUIT SHALL HAVE AN EQUIPMENT GROUNDING CONDUCTOR. THE GROUNDING CONDUCTOR SHALL BE BONDED TO THE METAL FRAMES OF ALL FIXED ELECTRICAL EQUIPMENT.
30. CONDUIT ROUTING SHOWN IS SUGGESTED ONLY. ALL INTERIOR BLDG. CONDUIT SHALL BE A MINIMUM 1/2" EMT UNLESS NOTED OTHERWISE. ALL CONDUIT SHALL BE INSTALLED CONCEALED IN WALLS, FLOORS, OR CEILINGS. ALL UNDERGROUND CONDUIT RUNS SHALL BE MINIMUM 3/4", EXCEPT WHERE OTHERWISE NOTED. ELECTRICAL CONDUIT INSTALLED UNDERGROUND SHALL BE RIGID NON-METALLIC PVC CONDUIT EXCEPT WHERE PROHIBITED BY LOCAL CODE OR AUTHORITIES HAVING JURISDICTION.
31. ALL UNDERGROUND CONDUITS SHALL BE LABELED WITH METAL TAGS IDENTIFYING POINTS OF ORIGIN.
32. UNDERGROUND CONDUIT RUNS SHALL BE GROUPED TOGETHER AS MUCH AS POSSIBLE AND NEATLY LAID PARALLEL IN TRENCHIES WITH NO UNNECESSARY CROSS OVERS. RUNS SHALL BE STRAIGHT EXCEPT WHERE CHANGES OF DIRECTION ARE NECESSARY.
33. VERIFY THE ELECTRICAL LOADS AND LOCATIONS WITH THE MECHANICAL, KITCHEN EQUIPMENT SUPPLIER, AND OTHER CONTRACTORS PRIOR TO BIDDING. THE ELECTRICAL CONTRACTOR SHALL PROVIDE FINAL CONNECTION, WIRING, HOOK-UP, ETC. FOR ALL EQUIPMENT AND CONTROLS REQUIRING ELECTRICAL POWER TO OPERATE. SEE THE KITCHEN AND MECHANICAL DRAWINGS FOR ADDITIONAL INFORMATION AND REQUIREMENTS.
34. THE ELECTRICAL CONTRACTOR SHALL VISIT THE SITE AND BECOME FAMILIAR WITH THE EXISTING CONDITIONS AND ALL OTHER FACTORS WHICH MAY AFFECT THE EXECUTION OF THE WORK AND INCLUDE ALL RELATED COSTS IN THE INITIAL BID PROPOSAL.
35. CONCEAL ALL ELECTRICAL WIRING AND RACEWAYS WHERE CONSTRUCTION PERMITS. EXPOSED HORIZONTAL RACEWAY RUNS ON ROOF IN EXCESS OF 5 FEET ARE NOT PERMITTED. EXPOSED RACEWAY IS PERMITTED WHERE STRUCTURE IS EXPOSED TO VIEW AND IN THESE LOCATIONS CAREFULLY INSTALL RACEWAYS PARALLEL TO WALLS, BEAMS, AND COLUMNS.
36. ALL ELECTRICAL EQUIPMENT, CONDUIT, AND LIGHTING FIXTURES SHALL BE ANCHORED OR SUPPORTED IN ACCORDANCE WITH THE LOCAL SEISMIC ZONE REQUIREMENTS.
37. VERIFY ALL NEW AND EXISTING UTILITY LOCATIONS PRIOR TO TRENCHING. COORDINATE UNDERGROUND ELECTRICAL WORK WITH ALL OTHER SITE UTILITIES PRIOR TO INSTALLATION.
38. IN THE EVENT OF A CONFLICT OR INCONSISTENCY BETWEEN ITEMS INDICATED ON THE PLANS AND/OR SPECIFICATIONS OR WITH CODE REQUIREMENTS, THE NOTE, SPECIFICATION OR CODE WHICH PRESCRIBES AND ESTABLISHES THE MORE COMPLETE JOB OR THE HIGHER STANDARD SHALL PREVAIL.
39. ALL CONDUIT AND OTHER ELECTRICAL EQUIPMENT MUST BE SUPPORTED FROM THE STRUCTURE ABOVE. ABSOLUTELY NO EQUIPMENT MAY BE SUPPORTED FROM THE CEILING. ANY OPENINGS CUT INTO THE ACOUSTICAL CEILING TILES SHALL BE CUT TO THE EXACT SIZE REQUIRED IN ORDER TO MAINTAIN ANY MATERIAL RATINGS.
40. ELECTRICAL DESIGN HAS BEEN BASED ON THE INSTALLATION OF 75 DEGREES C CONDUCTORS CONNECTED TO TERMINAL LUGS AND EQUIPMENT, U.L. LISTED FOR A MINIMUM OF 75 DEGREES C. CONDUCTORS TERMINATED ON EQUIPMENT WITH A LOWER RATING (60 DEGREES C) OR NO RATING SHOWN, SHALL HAVE CONDUCTOR SIZE INCREASED TO CONFORM TO N.E.C. TABLE 310-16 AND U.L. NO. 489 REQUIREMENTS.
41. ALL SWITCHBOARDS, PANELBOARDS, DISCONNECT SWITCHES AND CONTACTORS, SHALL BE PROVIDED WITH LUGS LABELED AND RATED FOR A MINIMUM 75 DEGREES C. SWITCHBOARDS, SPC, PANELBOARDS, DISCONNECT SWITCHES, CONTACTORS AND TRANSFORMERS ARE TO BE "LISTED" AND "IDENTIFIED" AS RATED FOR A MINIMUM OF 75 DEGREES C CONDUCTOR TERMINATION.
42. AT THE CONCLUSION OF THIS PROJECT, THE ELECTRICAL CONTRACTOR SHALL PROVIDE AN UPDATED TYPEWRITTEN DIRECTORY INSIDE EACH PANELBOARD PROPERLY IDENTIFYING EACH CIRCUIT USED AND THE SPECIFIC LOAD SERVED.
43. CONTRACTOR SHALL COORDINATE INSTALLATION OF UTILITIES ABOVE THE CEILING TO PROVIDE THE GREATEST POSSIBLE CLEARANCE FOR INSTALLATION OF AND FUTURE CHANGES TO THE MECHANICAL , PLUMBING AND FIRE SPRINKLER SYSTEMS, ETC. CONDUIT AND PIPE TO BE RUN TO MAXIMIZE USE OF CEILING SPACE FOR USE BY OTHER TRADES.
44. ALL CIRCUIT BREAKERS, FUSES AND ELECTRICAL EQUIPMENT SHALL HAVE AN INTERRUPTING RATING NOT LESS THAN THE MAXIMUM SHORT CIRCUIT CURRENT TO WHICH THEY MAY BE SUBJECTED.
45. ALL DEVICES INSTALLED OUTSIDE OR IN DAMP LOCATIONS SHALL BE APPROVED WEATHERPROOF.
46. THE E. C. SHALL NOT BORE, NOTCH OR IN ANYWAY CUT INTO ANY STRUCTURAL MEMBER WITHOUT WRITTEN APPROVAL FROM THE ARCHITECT OR STRUCTURAL ENGINEER. INSTALL CONDUITS FOR ROOF MOUNTED EQUIPMENT BELOW ROOF AND STUB-UP AT EACH PIECE OF EQUIPMENT. FLASH AND SEAL ALL PENETRATIONS.
47. THE ENTIRE WIRING SYSTEM SHALL BE TESTED FOR SHORT CIRCUITS, GROUNDS AND INSULATION RESISTENCE BETWEEN CONDUCTORS AND TO GROUND.
48. PROVIDE PERMANENT PLASTIC LAMINATE NAME PLATE FOR ALL ELECTRICAL EQUIPMENT, INCLUDING SWITCHGEAR, PANELS, SWITCHES, CONTROLS, ECT. NAME PLATE SHALL SHOW EQUIPMENT TAG, VOLTAGE, PHASE, CURRENT RATING AND FEED SOURCE.
49. PROVIDE PERMANENT PLASTIC LAMINATE NAMEPLATE AT ALL SERVICE DISCONNECT DEVICES TO INDICATE "SERVICE DISCONNECTING MEANS".
50. VERIFY EXACT LOCATIONS AND SIZE OF MECHANICAL EQUIPMENT AND POINTS OF CONNECT WITH INSTALLING CONTRACTOR PRIOR TO ROUGHING IN FOR SAME.
51. ALL CONDUIT IN EXPOSED AREAS SHALL BE ROUTED TIGHT TO THE UNDERSIDE OF THE STRUCTURE ABOVE.
52. UNLESS SPECIFICALLY SHOWN ON THESE PLANS NO STRUCTURAL MEMBER SHALL BE CUT, DRILLED NOR NOTCHED WITHOUT PRIOR WRITTEN AUTHORIZATION FROM THE STRUCTURAL ENGINEER AND THE DISTRICT STRUCTURAL ENGINEER FROM THE DIVISION OF THE STATE ARCHITECT.
53. ALL CONDUITS CROSSING OVER BUILDING EXPANSION JOINTS ARE TO BE INSTALLED WITH APPROPRIATE EXPANSION FITTINGS.

REMODEL/RENOVATION PROJECT NOTES

1. EXISTING BUILDINGS, REMODELS AND RENOVATIONS:
   A. CONTRACTOR TO VERIFY ALL CIRCUITING IN FIELD BY TRACING AND LABELING EACH CIRCUIT AT THE PANELBOARD. ALL PANELBOARDS SHALL HAVE ACCURATE AND COMPLETE PANEL SCHEDULES AT COMPLETION OF PROJECT. CIRCUITS IDENTIFIED AS SPARE (AVAILABLE) SHALL BE USED FIRST IN THIS PROJECT. CIRCUITING SHOWN ON PLANS IS BASED UPON AS-BUILT RECORDS AND NON-INTRUSIVE SURVEY.
   B. ALL LIGHTING FIXTURES INDICATED AS EXISTING TO REMAIN OR RELOCATED SHALL BE REFURBISHED TO FULL CAPACITY AND LIKE NEW CONDITION. REPLACE A MINIMUM OF ONE LAMP CLIP PER RELOCATED FIXTURE, AND ONE LENS/PARABOLIC LOUVER PER 100 FIXTURES. NEW MATERIALS SHALL MATCH THE ORIGINAL EXISTING MATERIALS IN NEW CONDITION.
2. CONTRACTOR SHALL CLEAN ALL EXISTING LIGHTING FIXTURES BY WASHING INTERIOR HOUSINGS, REFLECTIVE SURFACES, LENS AND LOUVERS.
3. COMPLETELY REMOVE ITEMS IDENTIFIED FOR DEMOLITION INCLUDING WIRE, SUPPORTS, BOXES, ENCLOSURES, AND ALL ACCESSORIES. REMOVE CIRCUIT BACK TO SOURCE OR NEAREST DEVICE TO REMAIN. MAINTAIN CONTINUITY OF CIRCUIT TO REMAIN, FIELD VERIFY. EXTEND AND REROUTE EXISTING CIRCUITS AS REQUIRED TO MAINTAIN CONTINUITY. ALL DEVICES TO REMAIN SHALL BE FULLY OPERATIONAL AT COMPLETION OF PROJECT. PATCH WALL WHERE DEVICE IS REMOVED. REMOVE ALL EXPOSED/ACCESSIBLE CONDUIT. ABANDON ANY CONDUITS CONCEALED INSIDE WALLS OR INACCESSIBLE HARDLID CEILINGS.

EQUIPMENT SUBSTITUTIONS

SUBSTITUTIONS WILL NOT BE ALLOWED UNLESS AUTHORIZED IN WRITING BY THE ARCHITECT, ENGINEER AND OWNER. THE CONTRACTOR IS COMPLETELY AND SOLELY RESPONSIBLE FOR ALL ASPECTS OF THE SUBSTITUTION INCLUDING UPDATING CONSTRUCTION DOCUMENTS, OBTAINING APPROVALS AND PERMITS FROM THE LOCAL AUTHORITY, AND COORDINATING WITH ALL TRADES TO ENSURE CHANGES TO AFFECTED BUILDING SYSTEMS ARE ACCOUNTED FOR AND ACCEPTABLE TO THE ENGINEERING TEAM. IF SUBSTITUTED EQUIPMENT REQUIRES ADDITIONAL ENGINEERING, CONTRACTOR SHALL BE RESPONSIBLE FOR PAYING FEES TO THE ENGINEERING TEAM. CONTRACTOR SHALL ENSURE SUBSTITUTED EQUIPMENT MEETS OR EXCEEDS DESIGN INTENT REGARDING RATINGS, PERFORMANCE, DIMENSIONAL CLEARANCES, PHYSICAL DIMENSIONS (MAX/MIN), WEIGHT LIMITATIONS, AND OTHER ASPECTS, PROVING SUBSTITUTION IS SUITABLE TO THE APPLICATION. ENGINEERS WILL REVIEW THE RATING AND PERFORMANCE OF SUBSTITUTED EQUIPMENT ONLY AND WILL NOT ASSUME RESPONSIBILITY FOR SUBSTITUTION AT ANY LEVEL.

IF CONTRACTOR CAN NOT MAKE SUBSTITUTED EQUIPMENT WORK IN THIS PROJECT, CONTRACTOR SHALL REVERT TO REQUIREMENTS OF PERMITTED CONSTRUCTION DOCUMENTS AT THEIR EXPENSE.

IT IS UNDERSTOOD BY ALL PARTIES THAT ANY SUBSTITUTIONS OF SPECIFIED PRODUCTS ARE DONE FOR THE PURPOSE OF COST SAVINGS TO THE OWNER. THEREFORE, ANY MATERIAL SUBSTITUTIONS OR DEVIATIONS PROPOSED BY THE CONTRACTOR SHALL BE INCLUDED WITH THE INITIAL BID AND SHALL SHOW A LINE ITEM CREDIT TO THE OWNER FOR EACH ITEM SUBSTITUTED IN LIEU OF SPECIFIED PRODUCTS.

REGISTERED PROFESSIONAL ENGINEER
JAMES A. MONTROSS
No. E12272
Exp. 9-30-14
ELECTRICAL
STATE OF CALIFORNIA

MONTROSS & ASSOCIATES, INC.
CONSULTING SERVICES
3198-D2 AIRPORT LOOP DR.
COSTA MESA, CA 92626
(949) 553-9005 fax (949) 553-9007

job no.	A9041.109-P
drawn	
submittal	
Plan Check Submittal	03.27.2012
Plan Check Re-Submittal	10.29.2012
Issue For Bid	10.29.2012
revision	
1 Client Revisions	10.23.2012

all ideas, designs and plans represented by this drawing are the exclusive property of the withee malcolm partnership, architects, and shall not be reproduced in whole or in part without the express prior written permission of said architects, any unauthorized reuse of these plans other than for the project and location shown is prohibited.

Tenant Improvements / Accessibility Upgrades for :
CITY OF TORRANCE
PERSONNEL BUILDING
3231 Torrance Boulevard, Torrance, CA 90503

OWNER : City of Torrance, Department of General Services
3350 Civic Center Drive, Torrance, CA 90503

WITHEE MALCOLM
ARCHITECTS, LLP
2251 W. 190th Street
Torrance, Ca 90504
t. 310.217.8885
f. 310.217.0425

general notes, legend, abbrev. & schedules
sheet title

E-1.0
sheet

BID SET ONLY

general single line notes

1. COMPLETE SYSTEM SHALL BE SERIES RATED FOR THE AVAILABLE FAULT CURRENT (65,000 MIN.). THE SERIES CONNECTED DEVICES SHALL HAVE BEEN INVESTIGATED BY U.L. IN COMBINATION WITH THE END USE EQUIPMENT AND THE EQUIPMENT IN WHICH THESE DEVICES ARE USED SHALL BE MARKED WITH THE SERIES CONNECTED RATING. ALL EQUIPMENT SHALL BE MARKED IN ACCORDANCE WITH N.E.C. REQUIREMENTS.
2. ALL TERMINATIONS AND ENCLOSURES SHALL BE RATED FOR USE WITH 75 DEGREE CELSIUS CONDUCTORS. ALL FEEDERS AND BUSSES SHALL BE SOLID COPPER.
3. MAIN SWITCHBOARD OVERCURRENT DEVICE AND ALL BUSSING SHALL BE RATED FOR 100% CONTINUOUS OPERATION.
4. MAINTAIN ALL CLEARANCES AS INDICATED ON ACTUAL SHOP DRAWINGS.
5. CONTRACTOR SHALL SUBMIT SWITCHBOARD SHOP DRAWINGS TO THE SERVING UTILITY FOR APPROVAL PRIOR TO FABRICATION. CONTRACTOR SHALL SECURE CONFIRMATION THAT PROPOSED SWITCHBOARD COMPLIES WITH POWER COMPANY REGULATIONS.
6. MAIN HORIZONTAL BUSSING SHALL BE FULL CAPACITY IN ALL SWITCHBOARD SECTIONS.
7. HORIZONTAL AND VERTICAL BUSSING SHALL BE FULL LENGTH. BUSSES SHALL HAVE A MINIMUM WITHSTAND RATING EQUAL TO AVAILABLE FAULT CURRENT INDICATED, BUT IN NO CASE SHALL THE RATING BE LESS THAN 65,000 AMPS SYMMETRICAL.
8. VERTICAL BUS MAY BE TAPERED, TO NOT LESS THAN 1/3 THE AMPACITY RATING OF THE MAIN HORIZONTAL BUS, AND IN NO CASE SHALL THE VERTICAL BUSS BE OF LESS CAPACITY THAN THE SUM OF THE OVERCURRENT PROTECTIVE DEVICES MOUNTED IN THE RESPECTIVE SECTIONS, INCLUDING ANY INDICATED SPARES AND SPACES.
9. ALL FEEDERS SHOWN SHALL BE INSTALLED IN METAL RACEWAYS, UNLESS OTHERWISE NOTED.
10. ALL NEW PANELS SHALL BE BY EATON "POW-R-LINE" PANELBOARDS FOR CONSISTENCY WITH COT STANDARDS.

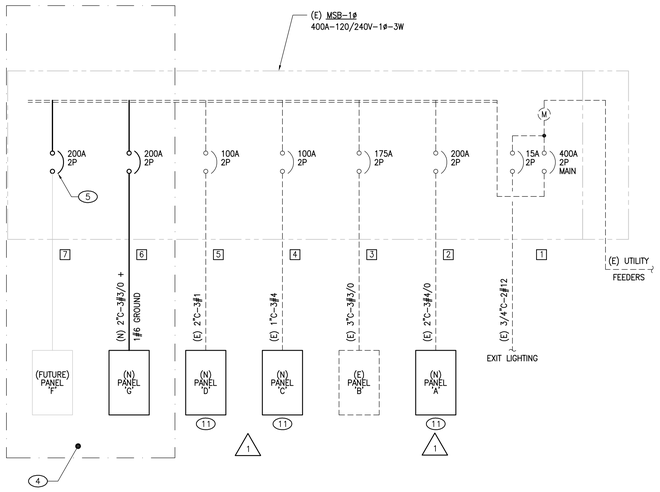

single line diagram - MSB-1ø
SCALE: none

DASHED LINES INDICATE EXISTING EQUIPMENT.
SOLID LINES INDICATE NEW EQUIPMENT.

"MSB-1Φ" LOAD SUMMARY
400A - 120/240V - 1PH - 3W

CKT.	NEW LOAD DESCRIPTION		KVA
1	EXIT LIGHTS	=	0.0
2	PANEL "A"	=	0.0
3	PANEL "B"	=	0.3
4	PANEL "C"	=	3.4
5	PANEL "D"	=	1.5
6	PANEL "E" - FUTURE LOAD	=	12.0
7	FUTURE PANEL "F" LOAD	=	25.0
SUB-TOTAL (NEW LOAD ADDED)		=	42.2
(E) PEAK DEMAND x 125% (SCE)		=	27.5
TOTAL KVA		=	69.7
1 PHASE VOLTAGE		=	240
1 PHASE AMPS		=	**290.4**

general demolition notes

1. REMOVE ALL DEVICES SHOWN DASHED.
2. REMOVE CONDUIT/WIRE BACK TO SOURCE OR TO NEAREST DEVICE TO REMAIN.
3. CONDUIT CONCEALED IN FLOOR, WALL OR CEILINGS SHALL BE ABANDONED IN PLACE.
4. AFTER DEMOLITION WORK, PATCH/REPAIR AND PAINT BUILDING SURFACE TO MATCH ADJUSTMENT SURFACE.
5. MAINTAIN CONTINUITY OF CIRCUITS TO DEVICES TO REMAIN. PROTECT ALL EXISTING EQUIPMENT, DEVICES, AND BUILDING SURFACES THAT ARE TO REMAIN DURING DEMOLITION.
6. ALL DEVICES TO REMAIN SHALL BE FULLY OPERATIONAL DURING AND AFTER REMODEL WORK. RELOCATE CONDUIT/WIRING, PROVIDE NEW CONDUIT/WIRE OR SPLICE BOXES AS REQUIRED TO MAINTAIN THIS EQUIPMENT.

keyed notes

1. COMPLETELY CLEAR SPACE OF ALL ELECTRICAL ITEMS, EQUIPMENT, WIRING/CONDUIT, LIGHTING AND DEVICES SHOWN AS DASHED LINES (REFER ALSO TO KEYED NOTE #9). REMOVE ALL FEEDERS AND BRANCH CIRCUITS BACK TO SOURCE OR TO NEAREST DEVICE TO REMAIN. CAP OFF FLUSH WITH ADJACENT SURFACE. RE-USE EXISTING BRANCH CIRCUIT TO NEAREST DEVICE THAT ARE TO REMAIN OR TO NEW DEVICES. ALL UNUSED EQUIPMENT SHALL BE OFFERED TO OWNER. DISCARD ALL REFUSED EQUIPMENT. REFER TO ARCHITECTURAL DRAWINGS.
2. DEMO ONLY AS NEEDED TO PERFORM NEW WORK. PROTECT ELECTRICAL DEVICES THAT ARE TO REMAIN DURING DEMOLITION AND CONSTRUCTION. SEE NEW PLAN.
3. DEMO EXISTING EXTERIOR WALL SCONCE AND REMOVE FEEDERS AND BRANCH CIRCUIT BACK TO SOURCE OR TO NEAREST DEVICE TO REMAIN. CAP OFF FLUSH WITH ADJACENT SURFACE.
4. PROVIDE SEPARATE LINE ITEM IN BID FOR ALL COSTS RELATED TO INSTALLATION OF NEW PANEL "G" AND FOR MAIN CIRCUIT BREAKER FOR FUTURE PANEL "F". PANEL "G" IS TO BE INSTALLED TO PROVIDE FUTURE CIRCUIT CAPACITY FOR EXISTING BUILDING AREA. MAIN CIRCUIT BREAKER FOR FUTURE PANEL "F" IS TO PROVIDE FOR FUTURE PANEL IN PROPOSED BUILDING EXPANSION AT SOUTHWEST CORNER OF BUILDING.
5. PROVIDE ADDITIONAL 200A CIRCUIT BREAKER IN MAIN SWITCHBOARD FOR FUTURE PANEL IN PROPOSED BUILDING ADDITION – REFER TO KEYED NOTE #4 ABOVE. MARK CIRCUIT BREAKER AS "FUTURE PANEL "F" – NEW BLDG. ADDITION".
6. DISCONNECT AND REMOVE DEVICE SHOWN DASHED.
7. DOOR RELEASE PUSH BUTTON AND ELECTRIC STRIKE TO BE RELOCATED IN NEW WORK.
8. DISCONNECT AND REMOVE LIGHT FIXTURE. BRANCH CIRCUIT HOMERUN TO REMAIN FOR REUSE.
9. DEVICE SHOWN SOLID LINE TO REMAIN, PROTECT IN PLACE.
10. DEMO KEYED SWITCH AT THIS LOCATION AND PROVIDE BLANK COVERPLATE. THIS SWITCH CURRENTLY PROVIDES ON/OFF CONTROL OF ALL EXIT SIGNS IN BUILDING. WIRENUT WIRES TOGETHER INSIDE SWITCHBOX SO THAT EXIT SIGNS REMAIN "ON" 24/7.
11. DISCONNECT FEEDER AND BRANCH CIRCUITS AND REMOVE OLD ANTIQUATED PANEL. PROVIDE NEW "POW-R-LINE" PANEL IN ITS PLACE. RECONNECT EXISTING FEEDER AND BRANCH CIRCUITS. MODIFY WALL FRAMING AND GWB TO ACCOMMODATE NEW PANEL.

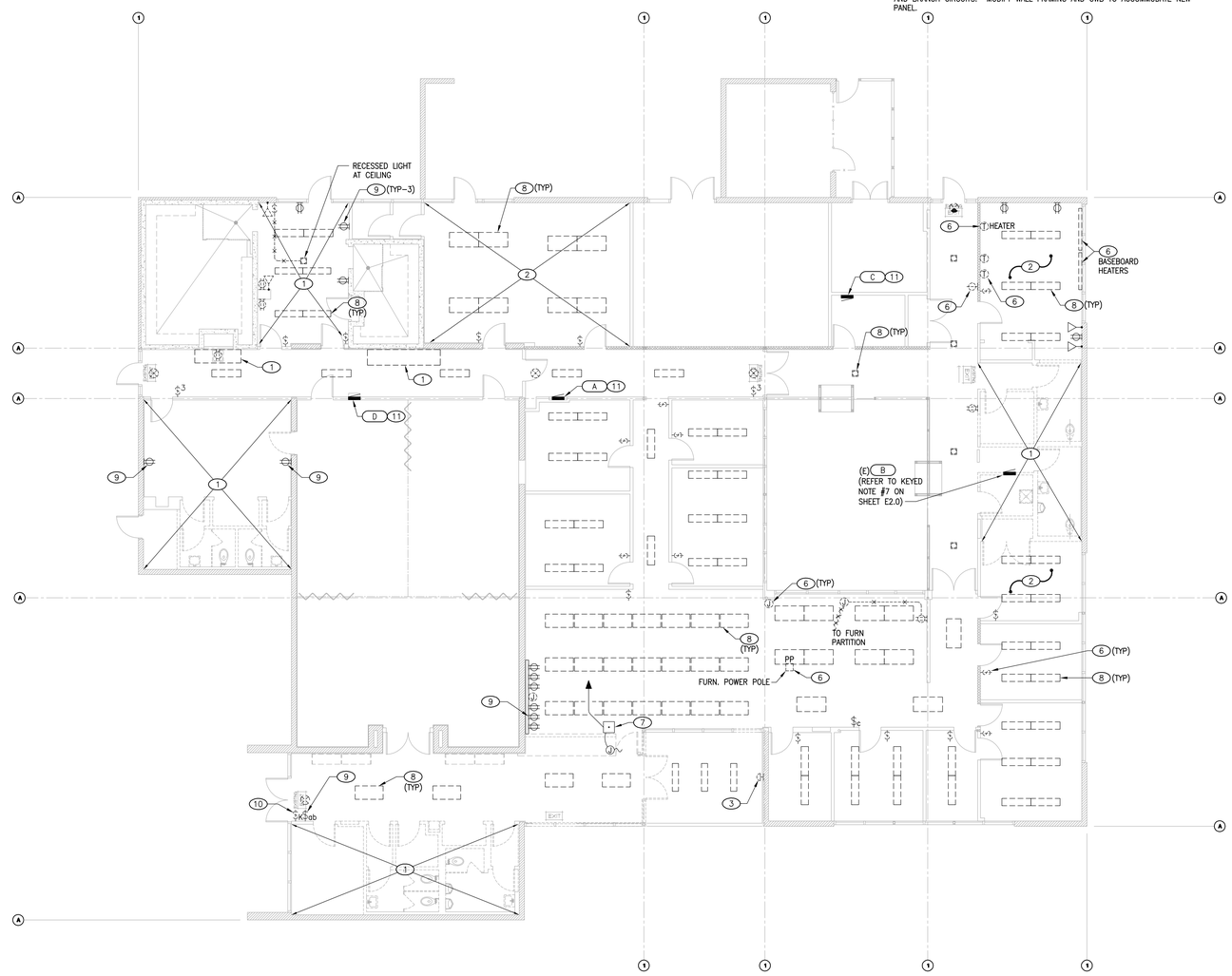

demolition plan
SCALE: 1/8"=1'-0"

scale: 1/8" = 1'-0"
0 8 16 24 32
NORTH

note:
ALL CONDITIONS INDICATED ARE EXISTING UNLESS NOTED OTHERWISE.

REGISTERED PROFESSIONAL ENGINEER
JAMES A. MONTROSE
No. E12272
Exp. 9-30-14
ELECTRICAL
STATE OF CALIFORNIA

MONTROSE & ASSOCIATES, INC.
CONSULTING SERVICES
3186-D2 AIRPORT LOOP DR.
COSTA MESA, CA 92626
(949) 553-9005 fax (949) 553-9007

job no.	A9041109-P
drawn	
submittal	
Plan Check Submittal	03.27.2012
Plan Check Re-Submittal	10.29.2012
Issue For Bid	10.29.2012
revision	
1 Client Revisions	10.23.2012

all ideas, designs and plans represented by this drawing are the exclusive property of the withee malcolm partnership, architects, and shall not be reproduced in whole or in part without the express prior written permission of said architects, any unauthorized reuse of these plans other than for the project and location shown is prohibited.

Tenant Improvements / Accessibility Upgrades for :
CITY OF TORRANCE
PERSONNEL BUILDING
3231 Torrance Boulevard, Torrance, CA 90503

OWNER : City of Torrance, Department of General Services
3350 Civic Center Drive, Torrance, CA 90503

WITHEE MALCOLM ARCHITECTS, LLP
2251 W. 190th Street
Torrance, Ca 90504
t. 310.217.8885
f. 310.217.0425

demolition plan
sheet title

E-1.1
sheet

BID SET ONLY

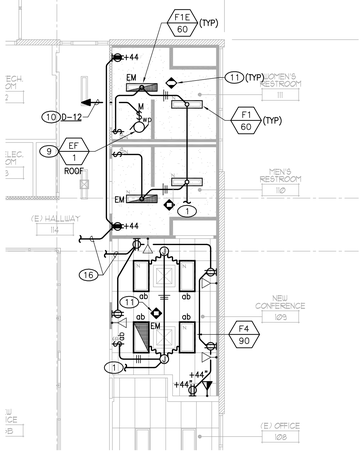

partial alternate power & lighting plan (2)
SCALE: 1/8"=1'-0"

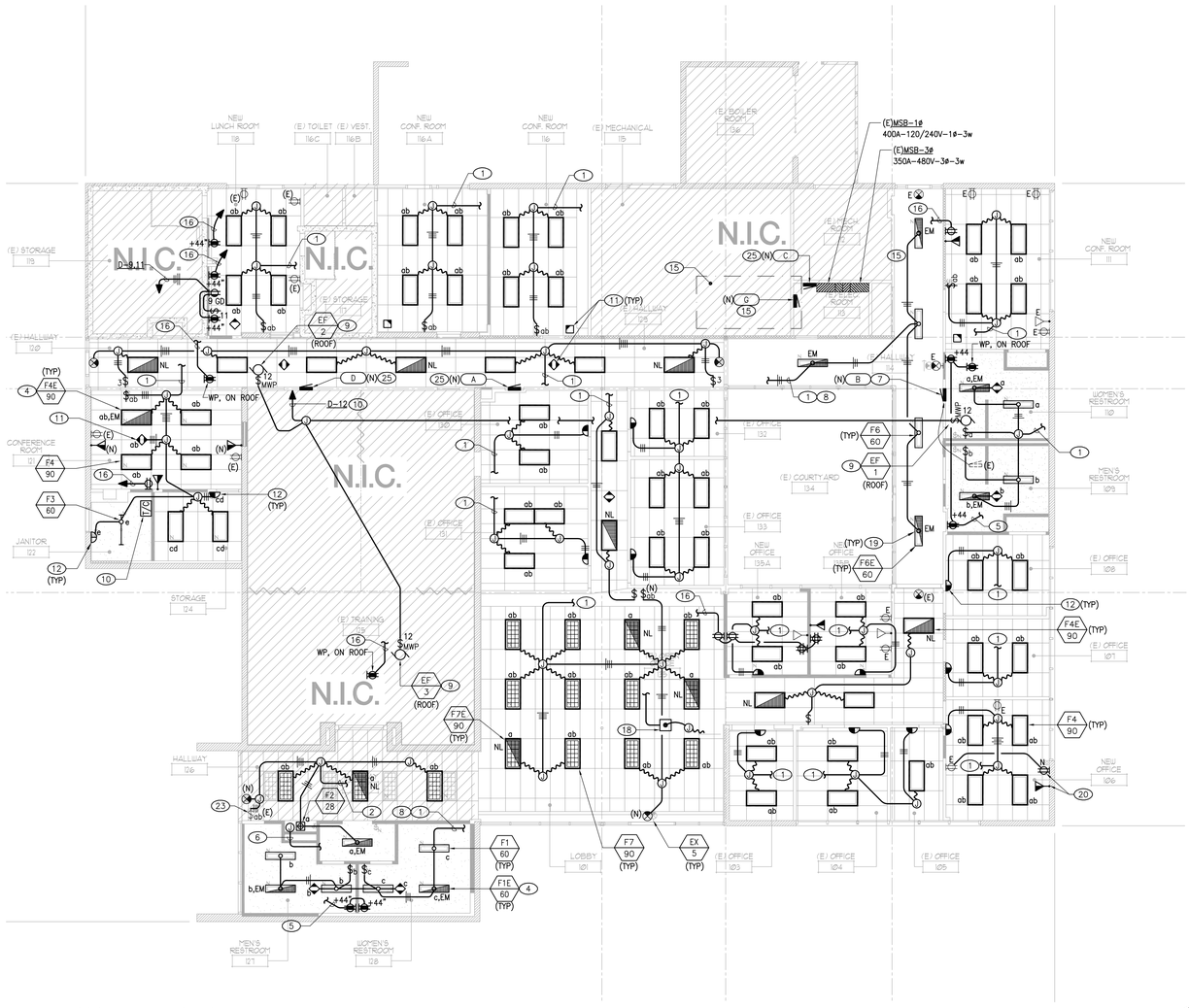

power & lighting reconstruction plan (1)
SCALE: 1/8"=1'-0"

scale: 1/8" = 1'-0"
0 8 16 24 32
NORTH

keyed notes

1. INTERCEPT AND EXTEND EXISTING LIGHTING BRANCH CIRCUIT REMAINING FROM DEMOLITION ALREADY SERVING AREA. VERIFY LOCATION IN FIELD PRIOR TO ROUGH-IN. PROVIDE ALL HARDWARE FOR A COMPLETE AND OPERABLE SYSTEM. EXISTING LIGHTING BRANCH CIRCUIT CONTINUITY SHALL REMAIN.
2. INTERCEPT EXISTING HALLWAY 120V LIGHTING CIRCUITRY AND CONNECT TO NEW HALLWAY LIGHTS, RECESSED DOWNLIGHT, RR VESTIBULE LIGHT, AND NEW EXIT SIGN. EXISTING CIRCUIT CONTINUITY AND SWITCHING SHALL REMAIN.
3. PER AS-BUILT DRAWINGS, CIRCUIT #3 FROM PANEL "B" IS AVAILABLE HERE. EXISTING LOAD ON CIRCUIT #3 IS 720W. NEW LOAD ADDED AT NEW CONFERENCE ROOM IS 270W. NEW TOTAL LOAD ON CIRCUIT #3 IS 990W=8.3AMPS @ 120V.
4. FIXTURE IS TO REMAIN SWITCHABLE (HOT WIRE TO BATTERY, SWITCHLEG TO BALLAST), BUT IN THE EVENT OF A LOSS OF UTILITY POWER TO THE BUILDING, THE FIXTURE IS TO OPERATE REGARDLESS OF THE SWITCH POSITION.
5. INTERCEPT AND EXTEND EXISTING BRANCH CIRCUIT REMAINING FROM DEMOLITION AND CONNECT TO NEW GFI RECEPTACLES AT +44"AFF AND ON TO NEW CONFERENCE ROOM RECEPTACLES AT 18" AFF. PROVIDE ALL HARDWARE FOR A COMPLETE AND OPERABLE SYSTEM.
6. INTERCEPT AND EXTEND EXISTING DRINKING FOUNTAIN BRANCH CIRCUIT TO NEW LOCATION INDICATED. PROVIDE ALL HARDWARE FOR A COMPLETE AND OPERABLE SYSTEM.
7. DEMO EXISTING PANEL. EXTEND EXISTING FEEDER AND ALL BRANCH CIRCUITS TO NEW PANEL AT NEW LOCATION INDICATED. RELOCATE AND RECONNECT TIME CLOCK AND RELAY CONTROLS (IN ENCLOSURE AT TOP OF PANEL BOARD) SAME AS EXISTING. EXISTING PANEL HAS A SPLIT BUS-(8) CIRCUITS (#21-28) ARE CONTROLLED BY TIME CLOCK/RELAY SYSTEM. PROVIDE SIMILAR PANEL, OR PROVIDE NEW (8) POLE RELAY TO CONTROL THESE (8) CIRCUITS. PANEL IS TO BE BY SQUARE D, TO PROVIDE SERIES RATED SYSTEM IN COORDINATION WITH UPSTREAM CIRCUIT BREAKERS IN MAIN SWITCHBOARD.
8. PROVIDE ADDITIONAL UNSWITCHED CONDUCTOR BYPASSING ALL LIGHTING CONTROLS FOR EMERGENCY LIGHTING.
9. PROVIDE MOTOR RATED SWITCH NEMA 3R, FOR EXHAUST FAN.
10. ROUTE HOMERUN FOR EXHAUST FANS THRU NEW TIME CLOCK MOUNTED ON WALL IN JANITOR ROOM #121. COORDINATE EXACT LOCATION OF THE TIME CLOCK IN THE FIELD. PROVIDE CONSPICUOUS LABEL AT TIMECLOCK STATING "RR EXHAUST FANS".
11. INSTALL NEW CEILING MOUNTED DUAL TECHNOLOGY MOTION SENSOR. CONNECT INTO LIGHTING CIRCUITRY FOR PRIMARY CONTROL OF LIGHTS, WITH WALL SWITCH AT DOOR PROVIDING OVERRIDE "OFF" CONTROL OF LIGHTING, PER T-24 REQUIREMENTS.
12. INSTALL NEW MOTION SENSOR SWITCH AND CONNECT TO NEW LIGHT IN ROOM. LEVITON #ODS10-ID (SINGLE CIRCUIT) OR #ODSOO-ID (TWO CIRCUIT) AS INDICATED.
13. REMOVE EXISTING 20A-2P SPARE CIRCUIT BREAKER AND INSTALL NEW CIRCUIT BREAKER IN ITS PLACE.
14. (not used) 1
15. REFER TO KEYED NOTE #4 ON SHEET E1.1. VERIFY FINAL LOCATION WITH COT.
16. INTERCEPT AND EXTEND EXISTING RECEPTACLE BRANCH CIRCUIT REMAINING FROM DEMOLITION ALREADY SERVING AREA. VERIFY LOCATION IN FIELD PRIOR TO ROUGH-IN. PROVIDE ALL HARDWARE FOR A COMPLETE AND OPERABLE SYSTEM. EXISTING RECEPTACLE BRANCH CIRCUIT CONTINUITY TO REMAIN.
17. REPLACE FIXTURE IN PLACE. CONNECT TO EXISTING LIGHTING BRANCH CIRCUIT.
18. REINSTALL DOOR RELEASE PUSH BUTTON AND ELECTRIC STRIKE TO MATCH PRIOR INSTALLATION. EXTEND NEW CIRCUIT AND CONNECT TO EXISTING.
19. PROVIDE 1400 LUMEN (MIN.) BACK-UP BATTERY BALLAST FOR LAMP OPERATION OF (90) MINUTES (MIN.).
20. PROVIDE SURFACE MOUNTED WIRE MOLD RACEWAY FOR NEW SURFACE MOUNTED DEVICES, DOWN FROM ABOVE CEILING.
21. EXISTING FIXTURES TO REMAIN. REWIRE FOR NEW SWITCHING CONFIGURATION SHOWN.
22. RE-USE EXISTING SWITCH, CURRENTLY CONNECTED TO NEW OFFICES #135A AND 135B LIGHTING (REFER TO KEYED NOTE #21), AND RECONNECT TO (3)EXISTING CORRIDOR LIGHTS. THESE (3)LIGHTS ARE CURRENTLY CONNECTED TO SWITCH "a" IN HALLWAY 126 AT WEST EXIT DOOR (REFER TO KEYED NOTE #23).
23. THESE SWITCHES CURRENTLY CONTROL HALLWAY 126 AND CORRIDOR LIGHTS OUTSIDE OFFICE 104 (SWITCH "a") AND PART OF OPEN OFFICE 135 LIGHTS (SWITCH "b"). RE-USE THESE SWITCHES AS SHOWN.
24. PROVIDE NEW CEILING MOUNTED MOTION SENSOR FOR CONTROL OF LUNCH ROOM LIGHTING.
25. 1 REPLACE EXISTING PANEL WITH NEW "POW-R-LINE" PANEL BY EATON. SEE SINGLE LINE DIAGRAM AND PANEL SCHEDULE. CHASE OUT AND VERIFY ALL BRANCH CIRCUITS AND PROVIDE ACCURATE PANEL CIRCUIT DIRECTORY. VERIFY ALL CIRCUIT BREAKER TYPES AND CAPACITY PRIOR TO PURCHASE.

job no.	A9041109-P
drawn	
submittal	
Plan Check Submittal	03.27.2012
Plan Check Re-Submittal	10.29.2012
Issue For Bid	10.29.2012
revision	
1 Client Revisions	10.23.2012

all ideas, designs and plans represented by this drawing are the exclusive property of the withee malcolm partnership, architects, and shall not be reproduced in whole or in part without the express prior written permission of said architects, any unauthorized reuse of these plans other than for the project and location shown is prohibited.

Tenant Improvements / Accessibility Upgrades for :

CITY OF TORRANCE

PERSONNEL BUILDING

3231 Torrance Boulevard, Torrance, CA 90503

OWNER : City of Torrance, Department of General Services
3350 Civic Center Drive, Torrance, CA 90503

WITHEE MALCOLM ARCHITECTS, LLP

2251 W. 190th Street
Torrance, Ca 90504
t. 310.217.8885
f. 310.217.0425

REGISTERED PROFESSIONAL ENGINEER
JAMES A. MONTROSS
No. E12272
Exp. 9-30-14
ELECTRICAL
STATE OF CALIFORNIA

MONTROSS & ASSOCIATES, INC.
CONSULTING SERVICES
3198-D2 AIRPORT LOOP DR.
COSTA MESA, CA 92626
(949) 553-9005 fax (949) 553-9007

sheet title: **power & lighting reconstruction plan**

sheet: **E-2.0**

BID SET ONLY

PANEL B (7)

(HR BLDG #09WMA03)

VOLTAGE 120/240V | LOCATION HALLWAY
PHASE 1 WIRE 3 | MAIN AMPS MLO
BUS AMPS 200 | NEW PANEL, RELOCATED CIRCUITS | MOUNTING FLUSH
OCPD AMPS 175 (PROVIDE PANEL WITH COMPARTMENT AT TOP FOR TIME CLOCK AND RELAY)

	DESCRIPTION	REC	LTG	A	B	BRKR AMP/P	CKT NO.	BUS CONN.	CKT NO.	BRKR AMP/P	A	B	REC	LTG	DESCRIPTION	
E,R	LTG - RELAY CONTROLLED			500		15/1	21		22	15/1	500				LTG - RELAY CONTROLLED	E,R
E,R	LTG - RELAY CONTROLLED				500	15/1	23		24	15/1		500			LTG - RELAY CONTROLLED	E,R
E,R	LTG - RELAY CONTROLLED			500		20/1	25		26	20/1	500				LTG - RELAY CONTROLLED	E,R
E,R	LTG - RELAY CONTROLLED				500	20/1	27		28	20/1		500			LTG - RELAY CONTROLLED	E,R
E	EXISTING LOAD			500		15/1	1		2	15/1	500				EXISTING LOAD	E
3 NR	EXISTING LOAD				990	15/1	3		4	15/1		500			EXISTING LOAD	E
E	EXISTING LOAD			500		15/1	5		6	15/1	500				EXISTING LOAD	E
E	EXISTING LOAD				500	15/1	7		8	15/1		500			EXISTING LOAD	E
E	EXISTING LOAD			500		15/1	9		10	20/1	500				EXISTING LOAD	E
E	EXISTING LOAD				500	20/1	11		12	20/1		500			EXISTING LOAD	E
E	EXISTING LOAD			500		20/1	13		14	20/1	500				EXISTING LOAD	E
E	EXISTING LOAD				500	50 / 2	15		16	20/1		500			EXISTING LOAD	E
E	EXISTING LOAD			500			17		18	20/1	500				EXISTING LOAD	E
E	EXISTING LOAD				500	20/1	19		20	20/1		500			EXISTING LOAD	E
E	EXISTING LOAD			500		15/1	29		30	15/1	500				EXISTING LOAD	E
E	EXISTING LOAD				500	15/1	31		32	20/1		500			EXISTING LOAD	E
E	EXISTING LOAD			500		20/1	33		34	20/1	500				EXISTING LOAD	E
E	EXISTING LOAD				500	20/1	35		36	20/1		500			EXISTING LOAD	E
	SPACE						37		38						SPACE	
	SPACE						39		40						SPACE	
	TOTALS			4500	4990						4500	4500				

VOLT AMPS (VA):

BUS A	9000	DEMAND FACTOR 1	x	LCL VA = 0	x 1.25	=	0
BUS B	9490	DEMAND FACTOR 1	x	NON LCL VA		=	18490
				TOTAL VA		=	18490
TOTAL	**18490**			1 PHASE VOLTAGE		=	240
				1 PHASE AMPS		=	**77.0**

PANEL G (15)

(HR BLDG #09WMA03)

VOLTAGE 120/240 | LOCATION ELECTRICAL ROOM
PHASE 1 WIRE 3 | MAIN AMPS MLO
BUS AMPS 200 | NEW | MOUNTING SURFACE
OCPD AMPS 200

DESCRIPTION	REC	LTG	A	B	BRKR AMP/P	CKT NO.	BUS CONN.	CKT NO.	BRKR AMP/P	A	B	REC	LTG	DESCRIPTION
SPARE					20/1	1		2	20/1					SPARE
SPARE					20/1	3		4	20/1					SPARE
SPARE					20/1	5		6	20/1					SPARE
SPARE					20/1	7		8	20/1					SPARE
SPARE					20/1	9		10	20/1					SPARE
SPARE					20/1	11		12	20/1					SPARE
SPACE						13		14						SPACE
SPACE						15		16						SPACE
SPACE						17		18						SPACE
SPACE						19		20						SPACE
SPACE						21		22						SPACE
SPACE						23		24						SPACE
SPACE						25		26						SPACE
SPACE						27		28						SPACE
SPACE						29		30						SPACE
SPACE						31		32						SPACE
SPACE						33		34						SPACE
SPACE						35		36						SPACE
SPACE						37		38						SPACE
SPACE						39		40						SPACE
TOTALS			0	0						0	0			

VOLT AMPS (VA):

BUS A	0	DEMAND FACTOR 1	x	LCL VA = 0	x 1.25	=	0
BUS B	0	DEMAND FACTOR 1	x	NON LCL VA		=	0
				TOTAL VA		=	0
TOTAL	**0**			1 PHASE VOLTAGE		=	240
				1 PHASE AMPS		=	**0.0**

PANEL C (NEW)

(HR BLDG #09WMA03)

VOLTAGE 120/240V | LOCATION ELECTRICAL ROOM
PHASE 1 WIRE 3 | MAIN AMPS MLO
BUS AMPS 125 | NEW PANEL, RECONNECTED CIRCUITS | MOUNTING SURFACE
OCPD AMPS 100

	DESCRIPTION	REC	LTG	A	B	BRKR AMP/P	CKT NO.	BUS CONN.	CKT NO.	BRKR AMP/P	A	B	REC	LTG	DESCRIPTION	
N	FC-1 MCA = 5A			520		20 / 2	1		2	20/1	500				A/C CONTROLS	E
13					520		3		4	20/1		500			A/C CONTROLS	E
E	TELEPHONE ROOM			360		20/1	5		6	20 / 1	1000				BOILER	E
N	SPARE					20/1	7		8	2		1000			---	E
	TOTALS			880	520						1500	1500				

VOLT AMPS (VA):

BUS A	2380	DEMAND FACTOR 1	x	LCL VA = 0	x 1.25	=	0
BUS B	2020	DEMAND FACTOR 1	x	NON LCL VA		=	4400
				TOTAL VA		=	4400
TOTAL	**4400**			1 PHASE VOLTAGE		=	240
				1 PHASE AMPS		=	**18.3**

PANEL A (NEW)

(HR BLDG #09WMA03)

VOLTAGE 120/240V | LOCATION HALLWAY
PHASE 1 WIRE 3 | MAIN AMPS MLO
BUS AMPS 200 | NEW PANEL, RECONNECTED CIRCUITS | MOUNTING FLUSH
OCPD AMPS 200

	DESCRIPTION	REC	LTG	A	B	BRKR AMP/P	CKT NO.	BUS CONN.	CKT NO.	BRKR AMP/P	A	B	REC	LTG	DESCRIPTION	
E	LTS RMS OFFICES				1000	20/1	1		2	20/1	600				LTS SO CORR. PHONE RM	E
E	LTS MEN TOILET SOUTH				1000	20/1	3		4	20/1		600			LTS LOBBY SOUTH	E
E	LTS LOBBY NORTH				100	20/1	5		6	20/1	500				LTS OFFICE	E
E	LTS OFFICE				1000	20/1	7		8	20/1		800			LTS OFFICE CENTER	E
E	LTS STORAGE, FAN #5				500	20/1	9		10	20/1	800				LTS OFFICE SO EAST	E
E	LTS OFFICE EAST				990	20/1	11		12	20/1		800			LTS OFFICE SO WEST	E
E	LTS OFFICE WEST				500	20/1	13		14	20/1	800				LTS OFFICE NORTH	E
E	LTS MENS&WMENS TOILET				500	20/1	15		16	20/1		750			LTS MEN& WMEN, FAN #2	E
E	LTS OFFICE				800	20/1	17		18	20/1	720				LTS OFFICE, TOILET	E
E	LTS OFFICE				800	20/1	19		20	20/1		900			LTS CORRIDOR	E
E	LTS OFFICE				800	20/1	21		22	20/1	500				HVAC CONTROLS, CLOCK	E
E	AIR COMPR. MECH ROOM				1200	20/1	23		24	20/1		720			RECPT OFFICE, RESTRMS	E
E	RECPT OFFICE, TOILETS				720	20/1	25		26	20/1	1080				RECPT OFFICE, CORRIDOR	E
E	LTS OFFICE, TOILETS				720	20/1	27		28	20/1		1080			RECPT OFFICE	E
E	LTS CORRIDOR				800	20/1	29		30	20/1	600				RECPT OFFICE, LOBBY	E
E	RECPT AT PANEL				360	20/1	31		32	20/1		720			RECPT OFFICE	E
E	ELECT DOOR				800	20/1	33		34	20/1	720				RECPT CORRIDOR	E
E	ELECT DOOR				800	20/1	35		36	20/1		600			LTS EXIT	E
E	FIRE ALARM PANEL				200	20/1	37		38	20/1	540				RECPT OFFICE	E
E	RECPT EAST				720	20/1	39		40	20/1		1200			RECPT COFFEE MESS	E
E	HIGH FRONT OFFICE LTS				900	20/1	41		42	20/1	1200				RECPT COFFEE MESS	E
	TOTALS				7120	8090					8060	8170				

VOLT AMPS (VA):

BUS A	15180	DEMAND FACTOR 1	x	LCL VA = 0	x 1.25	=	0
BUS B	16260	DEMAND FACTOR 1	x	NON LCL VA		=	31440
				TOTAL VA		=	31440
TOTAL	**31440**			1 PHASE VOLTAGE		=	240
				1 PHASE AMPS		=	**131.0**

PANEL D (NEW)

(HR BLDG #09WMA03)

VOLTAGE 120/240V | LOCATION HALLWAY
PHASE 1 WIRE 3 | MAIN AMPS MLO
BUS AMPS 100 | NEW PANEL, RECONNECTED CIRCUITS | MOUNTING FLUSH
OCPD AMPS 100

	DESCRIPTION	REC	LTG	A	B	BRKR AMP/P	CKT NO.	BUS CONN.	CKT NO.	BRKR AMP/P	A	B	REC	LTG	DESCRIPTION	
E	EXISTING LOAD			500		20/1	1		2	20/1	500				EXISTING LOAD	E
E	VENDING MACHINE				500	20/1	3		4	20/1		500			HOT DRINK MACHINE	E
E	VENDING MACHINE			500		20/1	5		6	20/1	500				VENDING MACHINE	E
E	COPIER				600	20/1	7		8	15/1		500			PROJ. SCREEN	E
N	LUNCH RM GARB DISPOSAL	1		500		20/1	9		10	15/1	500				EXISTING LOAD	E
N	LUNCH RM MICROWAVE	1			750	20/1	11		12	20/1		1500		*	EF-1, EF-2, EF-3	N
	TOTALS			1500	1850						1500	2500				

VOLT AMPS (VA):

BUS A	3000	DEMAND FACTOR 1	x	LCL VA = 1500	x 1.25	=	1875
BUS B	4350	DEMAND FACTOR 1	x	NON LCL VA		=	5850
				TOTAL VA		=	7725
TOTAL	**7350**			1 PHASE VOLTAGE		=	240
				1 PHASE AMPS		=	**32.2**

general panel schedule notes

1. WHERE PANEL IS INDICATED TO INCLUDE FEED THRU LUGS, THIS MEANS TO PROVIDE FEED THROUGH LUGS AT THE BOTTOM OF THE PANELBOARD FOR FEEDERS TO ANOTHER PANEL.
2. WHERE PANEL IS INDICATED TO INCLUDE DOUBLE LUGS, THIS MEANS TO PROVIDE A DOUBLE LUG KIT AT THE TOP OF THE PANELBOARD FOR FEEDERS TO ANOTHER PANEL.
3. WHERE PANEL IS INDICATED TO INCLUDE 200% NEUTRAL, THIS MEANS TO PROVIDE PANELBOARDS U.L. LISTED AS HAVING NEUTRAL BUSSES RATED TO CARRY 200 PERCENT OF THE CURRENT CARRYING CAPACITY OF THE PHASE BUSSING.
4. WHERE PANEL IS INDICATED TO INCLUDE I/G BUS, THIS MEANS TO PROVIDE PANELBOARDS WITH AN ISOLATED GROUND BUS, DRILLED AND TAPPED FOR NUMBER OF ISOLATED GROUND CONDUCTORS SHOWN, AS WELL AS FOR ALL SPARES AND SPACES SHOWN ON THE PANELBOARD.
5. WHERE PANEL CIRCUIT BREAKER RATING IS SHOWN AS SERIES RATED, THIS MEANS TO PROVIDE CIRCUIT BREAKERS IN PANELBOARD WHICH ARE SERIES RATED WITH THE UPSTREAM SYSTEM FOR THE AVAILABLE FAULT CURRENT. THE PANELBOARD SHALL BE MARKED WITH THE SERIES CONNECTED RATINGS, AS WELL AS ALL MARKING AS REQUIRED BY THE NEC, 240-83(C).
6. WHERE PANEL IS INDICATED AS RECESSED OR FLUSH MOUNTED, PROVIDE SPARE CONDUITS STUBBED UP INTO THE ACCESSIBLE CEILING SPACE. PROVIDE ONE (1) 3/4" CONDUIT ONLY FOR EACH THREE (3) SPARES OR SPACES, MINIMUM OF TWO (2). EACH CONDUIT SHALL BE TAGGED, CAPPED AND MARKED FOR FUTURE USE.
7. COORDINATE WITH APPLICABLE TRADE TO INSURE RECESSED MOUNTED PANELBOARDS WILL SEAT FLUSH IN THE WALLS PROVIDED.
8. ALL CIRCUIT BREAKERS USED AS SWITCHES SHALL BE U.L. LISTED AND LABELED "SWD" FOR SWITCHING DUTY.
9. ALL CIRCUIT BREAKERS USED TO SERVE MECHANICAL OR HEATING EQUIPMENT SHALL BE U.L. LISTED AND LABELED "HACR" FOR USE WITH THESE LOADS, WHERE REQUIRED.
10. MAINTAIN ALL CLEARANCES AS INDICATED ON ACTUAL SHOP DRAWINGS.

panel board legend

E	EXISTING LOAD, TO BE VERIFIED
LO	PROVIDE LOCK ON DEVICE
R	LIGHTING CIRCUIT CONTROLLED BY LIGHTING CONTROL SYSTEM RELAY
H	PROVIDE "HACR" LISTED CIRCUIT BREAKER
I	ISOLATED GROUND CIRCUIT
S	SWITCH RATED CIRCUIT BREAKER
N	NEW LOAD, PROVIDE CIRCUIT BREAKER
NR	NEW LOAD, REUSE EXISTING CIRCUIT BREAKER FIELD VERIFY
G	GROUND FAULT CIRCUIT INTERRUPTER CIRCUIT BREAKER

keyed notes

FOR KEYED NOTES SEE POWER PLAN SHEET E2.0.

job no.	A9041109-P
drawn	
submittal	
Plan Check Submittal	03.27.2012
Plan Check Re-Submittal	10.29.2012
Issue For Bid	10.29.2012
revision	
1 Client Revisions	10.23.2012

all ideas, designs and plans represented by this drawing are the exclusive property of the withee malcolm partnership, architects, and shall not be reproduced in whole or in part without the express prior written permission of said architects, any unauthorized reuse of these plans other than for the project and location shown is prohibited.

Tenant Improvements / Accessibility Upgrades for :
CITY OF TORRANCE
PERSONNEL BUILDING
3231 Torrance Boulevard, Torrance, CA 90503

OWNER : City of Torrance, Department of General Services
3350 Civic Center Drive, Torrance, CA 90503

WITHEE MALCOLM ARCHITECTS, LLP
2251 W. 190th Street
Torrance, Ca 90504
t. 310.217.8885
f. 310.217.0425

REGISTERED PROFESSIONAL ENGINEER
JAMES R. MONTROSS
No. E12272
Exp. 9-30-14
ELECTRICAL
STATE OF CALIFORNIA

MONTROSS & ASSOCIATES, INC.
CONSULTING SERVICES
3188-D2 AIRPORT LOOP DR.
COSTA MESA, CA 92626
(949) 553-9005 fax (949) 553-9007

panel schedules

sheet title

E-3.0

sheet

BID SET ONLY

BUILDING ENERGY ANALYSIS REPORT

PROJECT:

City of Torrance Personnel Bldg
3231 Torrance Blvd.
Torrance, CA 90503

Project Designer:

Withee Malcolm Architects, LLP
2251 West 190th Street
Torrance, CA 90504
310-217-8885

Report Prepared by:

MONTROSS & ASSOCIATES, Inc.
3198-D2 Airport Loop Drive
Costa Mesa, CA 92626
949-553-9005

Job Number:

12WMA02

Date:

10/26/2012

The EnergyPro computer program has been used to perform the calculations summarized in this compliance report. This program has approval and is authorized by the California Energy Commission for use with both the Residential and Nonresidential 2008 Building Energy Efficiency Standards.

This program developed by EnergySoft, LLC – www.energysoft.com.

TABLE OF CONTENTS

Cover Page	1
Table of Contents	2
Form LTG-1-C Certificate of Compliance	3
Form LTG-2-C Lighting Controls Credit Worksheet	9
Form LTG-3-C Indoor Lighting Power Allowance	11
Form LTG-MM Lighting Mandatory Measures	12

CERTIFICATE OF COMPLIANCE (Part 1 of 4) LTG-1C

Project Name	Date
City of Torrance Personnel Bldg	*10/26/2012*

Project Address	Climate Zone	Total Cond. Floor Area	Unconditioned Floor Area
3231 Torrance Blvd. Torrance	*6*	*7,064*	*0*

GENERAL INFORMATION

Building Type: ☑ Nonresidential ☐ High-Rise Residential ☐ Hotel/Motel Guest Room ☐ School ☐ Relocatable Public School ☑ Conditioned Spaces ☐ Unconditioned Spaces

Phase of Construction: ☐ New Construction ☐ Addition ☑ Alteration

Method of Compliance: ☐ Complete Building ☑ Area Category ☐ Tailored

Documentation Author's Declaration Statement

I certify that this Certificate of Compliance documentation is accurate and complete.

Name: JAMES MONTROSS	Signature
Company: *MONTROSS & ASSOCIATES, Inc.*	Date: *10/26/2012*
Address: *3198-D2 Airport Loop Drive*	CEA # / CEPE #
City/State/Zip: *Costa Mesa, CA 92626*	Phone: *949-553-9005*

The Principal Lighting Designer's Declaration Statement

- I am eligible under Division 3 of the California Business and Professional Code to accept responsibility for the lighting design.
- This Certificate of Compliance identifies the lighting features and performance specifications required for compliance with Title 24, Pages 1 and 6 of the California Code of Regulations.
- The design features represented on this Certificate of Compliance are consistent with the information provided to document this design on the other applicable compliance forms, worksheets, calculations, plans and specifications submitted to the enforcement agency for approval with this building permit application.

Name: *James Montross*	Signature
Company: *Montross & Associates, Inc.*	Phone: *949-553-9005*
Address: *3198-D2 Airport Loop Drive*	License # E12272
City/State/Zip: *Costa Mesa, CA 92626*	Date 10/26/2012

Lighting Mandatory Measures
Indicate location on building plans of Mandatory Measures Note Block: _____

LIGHTING COMPLIANCE FORMS & WORKSHEETS (check box if worksheets is included)

For detailed instructions on the use of this and all Energy Efficiency Standards compliance forms; please refer to the Nonresidential Manual published by the California Energy Commission.

☑	LTG-1C Pages 1 through 4	Certificate of Compliance. All Pages required on plans for all submittals.
☑	LTG-2C	Lighting Controls Credit Worksheet
☑	LTG-3C	Indoor Lighting Power Allowance
☐	LTG-4C Pages 1 through 4	Tailored Method Worksheet
☐	LTG-5C Pages 1 and 2	Line Voltage Track Lighting Worksheet

CERTIFICATE OF COMPLIANCE (Part 2 of 4) LTG-1C

Project Name	Date
City of Torrance Personnel Bldg	*10/26/2012*

INDOOR LIGHTING SCHEDULE and FIELD INSPECTION ENERGY CHECKLIST

Installation Certificate, LTG-1- INST (Retain a copy and verify form is completed and signed.) **Field Inspector** ☐

Certificate of Acceptance, LTG-2A and LTG-3A (Retain a copy and verify form is completed and signed.) **Field Inspector** ☐

A separate Lighting Schedule Must Be Filled Out for Conditioned and Unconditioned Spaces Installed Lighting Power listed on this Lighting Schedule is only for:

☑ **CONDITIONED SPACE** ☐ **UNCONDITIONED SPACE**

☑ The actual indoor lighting power listed below includes all installed permanent and portable lighting systems in accordance with §146(a).

☑ Only for offices: Up to the first 0.2 watts per square foot of portable lighting shall not be required to be included in the calculation of actual indoor lighting power density in accordance with the Exception to §146(a). All portable lighting in excess of 0.2 watts per square foot is totaled below.

A	Luminaire (Type, Lamps, Ballasts) B	C	D	E How wattage Was determined		F	G	H Field Inspector[2]	
None or Item Tag	Complete Luminaire Description[1] (i.e. 3 lamp fluorescent troffer, F32T8, one dimmable electronic ballasts)		Watts per Luminaire[1]	CEC Default From NAB	According To §130 (d or e)	Number of Luminaires	Installed Watts (D X F)	Pass	Fail
F1	*(2) 4 ft Fluorescent T8 Rapid Start Elec*		*60.0*	☑	☐	*6*	*360*	☐	☐
F1E	*(2) 4 ft Fluorescent T8 Rapid Start Elec*		*60.0*	☑	☐	*5*	*300*	☐	☐
F2	*(1) 26w Compact Fluorescent Triple 4 Pin Elec*		*28.0*	☑	☐	*1*	*28*	☐	☐
F3	*(2) 4 ft Fluorescent T8 Rapid Start Elec*		*60.0*	☑	☐	*1*	*60*	☐	☐
F4	*(3) 4 ft Fluorescent T8 Rapid Start Elec*		*90.0*	☑	☐	*55*	*4,950*	☐	☐
F4E	*(3) 4 ft Fluorescent T8 Rapid Start Elec*		*90.0*	☑	☐	*7*	*630*	☐	☐
F6	*(2) 4 ft Fluorescent T8 Rapid Start Elec*		*60.0*	☑	☐	*2*	*120*	☐	☐
F6E	*(2) 4 ft Fluorescent T8 Rapid Start Elec*		*60.0*	☑	☐	*3*	*180*	☐	☐
F7	*(3) 4 ft Fluorescent T8 Rapid Start Elec*		*90.0*	☑	☐	*11*	*990*	☐	☐
F7E	*(3) 4 ft Fluorescent T8 Rapid Start Elec*		*90.0*	☑	☐	*4*	*360*	☐	☐
				☐	☐			☐	☐
				☐	☐			☐	☐
				☐	☐			☐	☐
				☐	☐			☐	☐
				☐	☐			☐	☐
				☐	☐			☐	☐
				☐	☐			☐	☐
				☐	☐			☐	☐
				☐	☐			☐	☐
				☐	☐			☐	☐
				☐	☐			☐	☐
							Installed Watts Page Total:	*7,978*	
Building total number of pages:							Installed Watts Building Total (Sum of all pages)	*7,978*	
							Enter into LTG-1C Page 4 of 4		

1. Wattage shall be determined according to Section 130 (d and e). Wattage shall be rating of light fixture, not rating of bulb.
2. If Fail then describe on Page 2 of the Inspection Checklist Form and take appropriate action to correct. Verify building plans if necessary.

CERTIFICATE OF COMPLIANCE (Part 3 of 4) LTG-1C

Project Name	Date
City of Torrance Personnel Bldg	*10/26/2012*

INDOOR LIGHTING SCHEDULE and FIELD INSPECTION ENERGY CHECKLIST

Fill in controls for all spaces: a) area controls, b) multi-level controls, c) manual daylighting controls for daylit areas > 250 ft^2, automatic daylighting controls for daylit areas > 2,500 ft^2, d) shut-off controls, e) display lighting controls, f) tailored lighting controls – general lighting controlled separately from display, ornamental and display case lighting and g) demand responsive automatic controls for retail stores > 50,000 ft^2, in accordance with Section 131.

MANDATORY LIGHTING CONTROLS – FIELD INSPECTION ENERGY CHECKLIST

Type/ Description	Number of Units	Location in Building	Special Features	Field Inspector Pass	Fail
			☐	☐	☐
			☐	☐	☐
			☐	☐	☐
			☐	☐	☐
			☐	☐	☐
			☐	☐	☐
			☐	☐	☐
			☐	☐	☐
			☐	☐	☐
			☐	☐	☐
			☐	☐	☐
			☐	☐	☐
			☐	☐	☐
			☐	☐	☐
			☐	☐	☐
			☐	☐	☐
			☐	☐	☐
			☐	☐	☐
			☐	☐	☐
			☐	☐	☐
			☐	☐	☐

SPECIAL FEATURES INSPECTION CHECKLIST (See Page 2 of 4 of LTG-1C)

The local enforcement agency should pay special attention to the items specified in this checklist. These items require special written justification and documentation, and special verification. The local enforcement agency determines the adequacy of the justification, and may reject a building or design that otherwise complies based on the adequacy of the special justification and documentation submitted.

Field Inspector's Notes or Discrepancies:

CERTIFICATE OF COMPLIANCE (Part 4 of 4) LTG-1C

Project Name	Date
City of Torrance Personnel Bldg	*10/26/2012*

CONDITIONED AND UNCONDITIONED SPACE LIGHTING MUST NOT BE COMBINED FOR COMPLIANCE

Indoor Lighting Power for Conditioned Spaces	Watts	Indoor Lighting Power for Unconditioned Spaces	Watts
Installed Lighting (from Conditioned LTG-1C, Page 2)	*7,978*	**Installed** Lighting (from Unconditioned LTG-1C, Page 2)	*0*
Lighting Control Credit Conditioned Spaces (from LTG-2C)	- *1,166*	Lighting Control Credit Unconditioned Spaces (from LTG-2C)	- *0*
Adjusted **Installed** Lighting Power	= *6,813*	Adjusted **Installed** Lighting Power	= *0*
Complies if **Installed ≤ Allowed**	↕	Complies if **Installed ≤ Allowed**	↕
Allowed Lighting Power Conditioned Spaces (from LTG-3C or PERF-1)	*7,308*	**Allowed** Lighting Power Unconditioned Spaces (from LTG-3C)	*0*

Required Acceptance Tests

Designer:
This form is to be used by the designer and attached to the plans. Listed below is the acceptance test for the Lighting system, **LTG-2A and LTG-3A**. The designer is required to check the acceptance tests and list all control devices serving the building or space shall be certified as meeting the Acceptance Requirements for Code Compliance. If all the lighting system or control of a certain type requires a test, list the different lighting and the number of systems. The NA7 Section in the Appendix of the Nonresidential Reference Appendices Manual describes the test. Since this form will be part of the plans, completion of this section will allow the responsible party to budget for the scope of work appropriately. **Forms can be grouped by type of Luminaire controlled.**

Enforcement Agency:
Systems Acceptance. Before Occupancy Permit is granted for a newly constructed building or space or when ever new lighting system with controls is installed in the building or space shall be certified as meeting the Acceptance Requirements.
The **LTG-2A and LTG-3A** forms are not considered complete forms and are not to be accepted by the enforcement agency unless the boxes are checked and/or filled and signed. In addition, a Certificate of Acceptance forms shall be submitted to the enforcement agency that certifies plans, specifications, installation certificates, and operating and maintenance information meet the requirements of §10-103(b) of Title 24 Part 6. The field inspector must receive the properly filled out and signed forms before the building can receive final occupancy. A copy of the **LTG-2A and LTG-3A** for each different lighting luminaire control(s) must be provided to the owner of the building for their records.

Luminaires Controlled

Equipment Requiring Testing	Description	Number of Luminaires controlled	Location	LTG-2A and LTG-3A Controls and Sensors and Automatic Daylighting Controls Acceptance
Occ Sensor - Multi-Level	*(3) 4 ft Fluorescent T8 Rapid Start Elec*	*2*	*Office 103*	☑
Occ Sensor - Multi-Level	*(3) 4 ft Fluorescent T8 Rapid Start Elec*	*2*	*Office 104*	☑
Occ Sensor - Multi-Level	*(3) 4 ft Fluorescent T8 Rapid Start Elec*	*1*	*Office 105*	☑
Occ Sensor - Multi-Level	*(3) 4 ft Fluorescent T8 Rapid Start Elec*	*4*	*Office 106*	☑
Occ Sensor - Multi-Level	*(3) 4 ft Fluorescent T8 Rapid Start Elec*	*2*	*Office 107*	☑
Occ Sensor - Multi-Level	*(3) 4 ft Fluorescent T8 Rapid Start Elec*	*2*	*Office 108*	☑
Occ Sensor - Multi-Level	*(3) 4 ft Fluorescent T8 Rapid Start Elec*	*2*	*Office 130*	☑
Occ Sensor - Multi-Level	*(3) 4 ft Fluorescent T8 Rapid Start Elec*	*3*	*Office 131*	☑
Occ Sensor - Multi-Level	*(3) 4 ft Fluorescent T8 Rapid Start Elec*	*2*	*Office 132*	☑
Occ Sensor - Multi-Level	*(3) 4 ft Fluorescent T8 Rapid Start Elec*	*4*	*Office 133*	☑
Occ Sensor - Multi-Level	*(3) 4 ft Fluorescent T8 Rapid Start Elec*	*2*	*Office 135A*	☑
Occ Sensor - Multi-Level	*(3) 4 ft Fluorescent T8 Rapid Start Elec*	*2*	*Office 135B*	☑
Occ Sensor - Multi-Level	*(3) 4 ft Fluorescent T8 Rapid Start Elec*	*4*	*Conference 111*	☑
Occ Sensor - Multi-Level	*(3) 4 ft Fluorescent T8 Rapid Start Elec*	*4*	*Conference 116*	☑
Occ Sensor - Multi-Level	*(3) 4 ft Fluorescent T8 Rapid Start Elec*	*4*	*Conference 116A*	☑
				☐

CERTIFICATE OF COMPLIANCE (Part 4 of 4) LTG-1C

Project Name	Date
City of Torrance Personnel Bldg	*10/26/2012*

CONDITIONED AND UNCONDITIONED SPACE LIGHTING MUST NOT BE COMBINED FOR COMPLIANCE

Indoor Lighting Power for Conditioned Spaces	Watts	Indoor Lighting Power for Unconditioned Spaces	Watts
Installed Lighting (from Conditioned LTG-1C, Page 2)	*7,978*	**Installed** Lighting (from Unconditioned LTG-1C, Page 2)	*0*
Lighting Control Credit Conditioned Spaces (from LTG-2C)	- *1,166*	Lighting Control Credit Unconditioned Spaces (from LTG-2C)	- *0*
Adjusted **Installed** Lighting Power	= *6,813*	Adjusted **Installed** Lighting Power	= *0*
Complies if **Installed ≤ Allowed**	↕	Complies if **Installed ≤ Allowed**	↕
Allowed Lighting Power Conditioned Spaces (from LTG-3C or PERF-1)	*7,308*	**Allowed** Lighting Power Unconditioned Spaces (from LTG-3C)	*0*

Required Acceptance Tests

Designer:
This form is to be used by the designer and attached to the plans. Listed below is the acceptance test for the Lighting system, **LTG-2A and LTG-3A**. The designer is required to check the acceptance tests and list all control devices serving the building or space shall be certified as meeting the Acceptance Requirements for Code Compliance. If all the lighting system or control of a certain type requires a test, list the different lighting and the number of systems. The NA7 Section in the Appendix of the Nonresidential Reference Appendices Manual describes the test. Since this form will be part of the plans, completion of this section will allow the responsible party to budget for the scope of work appropriately. **Forms can be grouped by type of Luminaire controlled.**

Enforcement Agency:
Systems Acceptance. Before Occupancy Permit is granted for a newly constructed building or space or when ever new lighting system with controls is installed in the building or space shall be certified as meeting the Acceptance Requirements.
The **LTG-2A and LTG-3A** forms are not considered complete forms and are not to be accepted by the enforcement agency unless the boxes are checked and/or filled and signed. In addition, a Certificate of Acceptance forms shall be submitted to the enforcement agency that certifies plans, specifications, installation certificates, and operating and maintenance information meet the requirements of §10-103(b) of Title 24 Part 6. The field inspector must receive the properly filled out and signed forms before the building can receive final occupancy. A copy of the **LTG-2A and LTG-3A** for each different lighting luminaire control(s) must be provided to the owner of the building for their records.

Luminaires Controlled

Equipment Requiring Testing	Description	Number of Luminaires controlled	Location	LTG-2A and LTG-3A Controls and Sensors and Automatic Daylighting Controls Acceptance
Occ Sensor - Multi-Level	*(3) 4 ft Fluorescent T8 Rapid Start Elec*	*3*	*Conference 121*	☑
Occ Sensor - Multi-Level	*(3) 4 ft Fluorescent T8 Rapid Start Elec*	*1*	*Conference 121*	☑
Occ Sensor - Storage	*(2) 4 ft Fluorescent T8 Rapid Start Elec*	*1*	*Restroom 109*	☑
Occ Sensor - Storage	*(2) 4 ft Fluorescent T8 Rapid Start Elec*	*1*	*Restroom 109*	☑
Occ Sensor - Storage	*(2) 4 ft Fluorescent T8 Rapid Start Elec*	*1*	*Restroom 110*	☑
Occ Sensor - Storage	*(2) 4 ft Fluorescent T8 Rapid Start Elec*	*1*	*Restroom 110*	☑
Occ Sensor - Storage	*(2) 4 ft Fluorescent T8 Rapid Start Elec*	*2*	*Restroom 127*	☑
Occ Sensor - Storage	*(2) 4 ft Fluorescent T8 Rapid Start Elec*	*1*	*Restroom 127*	☑
Occ Sensor - Storage	*(2) 4 ft Fluorescent T8 Rapid Start Elec*	*2*	*Restroom 128*	☑
Occ Sensor - Storage	*(2) 4 ft Fluorescent T8 Rapid Start Elec*	*2*	*Restroom 128*	☑
Occ Sensor - Hallway	*(3) 4 ft Fluorescent T8 Rapid Start Elec*	*2*	*Hallway 120*	☑
Occ Sensor - Hallway	*(3) 4 ft Fluorescent T8 Rapid Start Elec*	*2*	*Hallway 120*	☑
Occ Sensor - Hallway	*(3) 4 ft Fluorescent T8 Rapid Start Elec*	*2*	*Hallway 129*	☑
Occ Sensor - Hallway	*(3) 4 ft Fluorescent T8 Rapid Start Elec*	*1*	*Hallway 129*	☑
Occ Sensor - Storage	*(2) 4 ft Fluorescent T8 Rapid Start Elec*	*1*	*Janitor 122*	☑
				☐

CERTIFICATE OF COMPLIANCE (Part 4 of 4) LTG-1C

Project Name	Date
City of Torrance Personnel Bldg	*10/26/2012*

CONDITIONED AND UNCONDITIONED SPACE LIGHTING MUST NOT BE COMBINED FOR COMPLIANCE

Indoor Lighting Power for Conditioned Spaces	Watts	Indoor Lighting Power for Unconditioned Spaces	Watts
Installed Lighting (from Conditioned LTG-1C, Page 2)	*7,978*	**Installed** Lighting (from Unconditioned LTG-1C, Page 2)	*0*
Lighting Control Credit Conditioned Spaces (from LTG-2C)	- *1,166*	Lighting Control Credit Unconditioned Spaces (from LTG-2C)	- *0*
Adjusted **Installed** Lighting Power	= *6,813*	Adjusted **Installed** Lighting Power	= *0*
Complies if **Installed ≤ Allowed**	↕	Complies if **Installed ≤ Allowed**	↕
Allowed Lighting Power Conditioned Spaces (from LTG-3C or PERF-1)	*7,308*	**Allowed** Lighting Power Unconditioned Spaces (from LTG-3C)	*0*

Required Acceptance Tests

Designer:
This form is to be used by the designer and attached to the plans. Listed below is the acceptance test for the Lighting system, **LTG-2A and LTG-3A**. The designer is required to check the acceptance tests and list all control devices serving the building or space shall be certified as meeting the Acceptance Requirements for Code Compliance. If all the lighting system or control of a certain type requires a test, list the different lighting and the number of systems. The NA7 Section in the Appendix of the Nonresidential Reference Appendices Manual describes the test. Since this form will be part of the plans, completion of this section will allow the responsible party to budget for the scope of work appropriately. **Forms can be grouped by type of Luminaire controlled.**

Enforcement Agency:
Systems Acceptance. Before Occupancy Permit is granted for a newly constructed building or space or when ever new lighting system with controls is installed in the building or space shall be certified as meeting the Acceptance Requirements.
The **LTG-2A and LTG-3A** forms are not considered complete forms and are not to be accepted by the enforcement agency unless the boxes are checked and/or filled and signed. In addition, a Certificate of Acceptance forms shall be submitted to the enforcement agency that certifies plans, specifications, installation certificates, and operating and maintenance information meet the requirements of §10-103(b) of Title 24 Part 6. The field inspector must receive the properly filled out and signed forms before the building can receive final occupancy. A copy of the **LTG-2A and LTG-3A** for each different lighting luminaire control(s) must be provided to the owner of the building for their records.

Luminaires Controlled

Equipment Requiring Testing	Description	Number of Luminaires controlled	Location	LTG-2A and LTG-3A Controls and Sensors and Automatic Daylighting Controls Acceptance
Occ Sensor - Multi-Level	*(3) 4 ft Fluorescent T8 Rapid Start Elec*	*2*	*Storage 124*	☑
Occ Sensor - Multi-Level	*(3) 4 ft Fluorescent T8 Rapid Start Elec*	*4*	*Lunch Room 118*	☑
				☐
				☐
				☐
				☐
				☐
				☐
				☐
				☐
				☐
				☐
				☐
				☐
				☐
				☐

all ideas, designs and plans represented by this drawing are the exclusive property of the withee malcolm partnership, architects, and shall not be reproduced in whole or in part without the express prior written permission of said architects, any unauthorized reuse of these plans other than for the project and location shown is prohibited.

job no.	A9041109-P
drawn	
submittal	
Plan Check Submittal	03.27.2012
Plan Check Re-Submittal	10.29.2012
Issue For Bid	10.29.2012
revision	
1 Client Revisions	10.23.2012

Tenant Improvements / Accessibility Upgrades for :

CITY OF TORRANCE

PERSONNEL BUILDING

3231 Torrance Boulevard, Torrance, CA 90503

OWNER : City of Torrance, Department of General Services
3350 Civic Center Drive, Torrance, CA 90503

WITHEE MALCOLM ARCHITECTS, LLP

2251 W. 190th Street
Torrance, Ca 90504
t. 310.217.8885
f. 310.217.0425

REGISTERED PROFESSIONAL ENGINEER JAMES MONTROSS No. E12272 Exp. 9-30-14 ELECTRICAL STATE OF CALIFORNIA

MONTROSS & ASSOCIATES, INC.
CONSULTING SERVICES
3198-D2 AIRPORT LOOP DR.
COSTA MESA, CA 92626
(949) 553-9005 fax (949) 553-9007

title 24 forms

sheet title

1 **E-4.0**

sheet

BID SET ONLY

LIGHTING CONTROLS CREDIT WORKSHEET (Part 1 of 2) LTG-2C

Project Name: *City of Torrance Personnel Bldg* | Date: *10/26/2012*

POWER ADJUSTMENT FACTORS (PAF) FOR NON-DAYLIGHT CONTROLS

A Separate PAF Worksheet Must Be Filled Out for Conditioned and Unconditioned Spaces. Control Credits listed on this schedule are only for:

☑ **CONDITIONED SPACES** ☐ **UNCONDITIONED SPACES**

A	B	C	D	E	F	G
Room # Zone ID Areas	Lighting Control Description[1]	Plan Reference	Room Area (ft^2)	Watts of Control Lighting	Power Adjustments Factor[2]	Control Credit Watts (E x F)
Office 103	*Occ Sensor - Multi-Level*	*F4*	*122*	*180*	*0.20*	*36*
Office 104	*Occ Sensor - Multi-Level*	*F4*	*162*	*180*	*0.20*	*36*
Office 105	*Occ Sensor - Multi-Level*	*F4*	*96*	*90*	*0.20*	*18*
Office 106	*Occ Sensor - Multi-Level*	*F4*	*232*	*360*	*0.20*	*72*
Office 107	*Occ Sensor - Multi-Level*	*F4*	*156*	*180*	*0.20*	*36*
Office 108	*Occ Sensor - Multi-Level*	*F4*	*182*	*180*	*0.20*	*36*
Office 130	*Occ Sensor - Multi-Level*	*F4*	*202*	*180*	*0.20*	*36*
Office 131	*Occ Sensor - Multi-Level*	*F4*	*232*	*270*	*0.20*	*54*
Office 132	*Occ Sensor - Multi-Level*	*F4*	*130*	*180*	*0.20*	*36*
Office 133	*Occ Sensor - Multi-Level*	*F4*	*234*	*360*	*0.20*	*72*
Office 135A	*Occ Sensor - Multi-Level*	*F4*	*140*	*180*	*0.20*	*36*
Office 135B	*Occ Sensor - Multi-Level*	*F4*	*134*	*180*	*0.20*	*36*
Conference 111	*Occ Sensor - Multi-Level*	*F4*	*322*	*360*	*0.20*	*72*
Conference 116	*Occ Sensor - Multi-Level*	*F4*	*268*	*360*	*0.20*	*72*
Conference 116A	*Occ Sensor - Multi-Level*	*F4*	*232*	*360*	*0.20*	*72*
Conference 121	*Occ Sensor - Multi-Level*	*F4*	*288*	*270*	*0.20*	*54*
Conference 121	*Occ Sensor - Multi-Level*	*F4E*	*288*	*90*	*0.20*	*18*
Restroom 109	*Occ Sensor - Storage*	*F1*	*154*	*60*	*0.15*	*9*
Restroom 109	*Occ Sensor - Storage*	*F1E*	*154*	*60*	*0.15*	*9*
Restroom 110	*Occ Sensor - Storage*	*F1*	*166*	*60*	*0.15*	*9*
Restroom 110	*Occ Sensor - Storage*	*F1E*	*166*	*60*	*0.15*	*9*
Restroom 127	*Occ Sensor - Storage*	*F1*	*156*	*120*	*0.15*	*18*
Restroom 127	*Occ Sensor - Storage*	*F1E*	*156*	*60*	*0.15*	*9*
Restroom 128	*Occ Sensor - Storage*	*F1*	*218*	*120*	*0.15*	*18*
Restroom 128	*Occ Sensor - Storage*	*F1E*	*218*	*120*	*0.15*	*18*
Hallway 120	*Occ Sensor - Hallway*	*F4*	*346*	*180*	*0.25*	*45*
Hallway 120	*Occ Sensor - Hallway*	*F4E*	*346*	*180*	*0.25*	*45*
Hallway 129	*Occ Sensor - Hallway*	*F4*	*220*	*180*	*0.25*	*45*
Hallway 129	*Occ Sensor - Hallway*	*F4E*	*220*	*90*	*0.25*	*23*
					PAGE TOTAL	*1,049*

Note: Conditioned and Unconditioned Space shall be separately totaled	Building total of non-daylight control credit watts for all pages of LTG-2C Page 1 of 2	
	Enter building total of all daylight controls credit watts from LTG-2C Page 2 of 2	*0*
	BUILDING TOTAL OF ALL CONTROL CREDIT WATTS (FOR BOTH NON-DAYLIGHT AND DAYLIGHT CONTROL CREDITS) Enter in LTG-1C; Page 4: Lighting Control Credit as appropriate for CONDITIONED or UNCONDITIONED Spaces	*1,166*

1. Description shall be consistent with Type of Control defined in Table 146-C
2. Power Adjustment Factor taken from Table 146-C

LIGHTING CONTROLS CREDIT WORKSHEET (Part 1 of 2) LTG-2C

Project Name: *City of Torrance Personnel Bldg* | Date: *10/26/2012*

POWER ADJUSTMENT FACTORS (PAF) FOR NON-DAYLIGHT CONTROLS

A Separate PAF Worksheet Must Be Filled Out for Conditioned and Unconditioned Spaces. Control Credits listed on this schedule are only for:

☑ **CONDITIONED SPACES** ☐ **UNCONDITIONED SPACES**

A	B	C	D	E	F	G
Room # Zone ID Areas	Lighting Control Description[1]	Plan Reference	Room Area (ft^2)	Watts of Control Lighting	Power Adjustments Factor[2]	Control Credit Watts (E x F)
Janitor 122	*Occ Sensor - Storage*	*F3*	*82*	*60*	*0.15*	*9*
Storage 124	*Occ Sensor - Multi-Level*	*F4*	*128*	*180*	*0.20*	*36*
Lunch Room 118	*Occ Sensor - Multi-Level*	*F4*	*236*	*360*	*0.20*	*72*
					PAGE TOTAL	*117*

Note: Conditioned and Unconditioned Space shall be separately totaled	Building total of non-daylight control credit watts for all pages of LTG-2C Page 1 of 2	
	Enter building total of all daylight controls credit watts from LTG-2C Page 2 of 2	*0*
	BUILDING TOTAL OF ALL CONTROL CREDIT WATTS (FOR BOTH NON-DAYLIGHT AND DAYLIGHT CONTROL CREDITS) Enter in LTG-1C; Page 4: Lighting Control Credit as appropriate for CONDITIONED or UNCONDITIONED Spaces	*1,166*

1. Description shall be consistent with Type of Control defined in Table 146-C
2. Power Adjustment Factor taken from Table 146-C

INDOOR LIGHTING POWER ALLOWANCE LTG-3C

Project Name: *City of Torrance Personnel Bldg* | Date: *10/26/2012*

ALLOWED LIGHTING POWER (Chose One Method)

A Separate LTG-3C must be filled out for Conditioned and Unconditioned Spaces. Indoor Lighting Power Allowances listed on this page are only for:

☑ CONDITIONED SPACES ☐ UNCONDITIONED SPACES

COMPLETE BUILDING METHOD

BUILDING CATEGORY (From §146 Table 146-E)	WATTS PER (ft^2)	X	COMPLETE BLDG. AREA	=	ALLOWED WATTS
	TOTALS				
			AREA		WATTS

AREA CATEGORY METHOD

BUILDING CATEGORY (From §146 Table 146-F)	WATTS PER (ft^2)	X	Area ft^2	=	ALLOWED WATTS
Office <= 250 sqft	*1.10*		*2,022*		*2,224*
Convention/Conference/Meeting	*1.40*		*1,110*		*1,554*
Lobby, Main Entry	*1.50*		*1,170*		*1,755*
Corridor/Restroom/Support	*0.60*		*2,316*		*1,390*
Commercial, Industrial Storage	*0.60*		*210*		*126*
Lounge, Recreation	*1.10*		*236*		*260*
	TOTALS		*7,064*		*7,308*
			AREA		WATTS

TAILORED METHOD

Total Allowed Watts using the Tailored Method taken from LTG-4C (Page 1 of 4) Row 3: *0*

The indoor lighting power allowance using the Tailored Method of compliance shall be determined using the LTG-4C set of forms. A separate set of LTG-4C forms shall be filled out for CONDITIONED and UNCONDITIONED spaces

LIGHTING MANDATORY MEASURES: NONRESIDENTIAL LTG-MM

Project Name: *City of Torrance Personnel Bldg* | Date: *10/26/2012*

Indoor Lighting Measures:

§131(d):	**Shut-off Controls**
1.	For every floor, all interior lighting systems shall be equipped with a separate automatic control to shut off the lighting. This automatic control shall meet the requirements of Section 119 and may be an occupancy sensor, automatic time switch, or other device capable of automatically shutting off the lighting.
2.	Override for Building Lighting Shut-off: The automatic building shut-off system is provided with a manual, accessible override switch in sight of the lights. The area of override is not to exceed 5,000 square feet.
§119(h):	Automatic Control Devices Certified: All automatic control devices specified are certified, all alternate equipment shall be certified and installed as directed by the manufacturer.
§111:	Fluorescent Ballast and Luminaires Certified: All fluorescent fixtures specified for the project are certified and listed in the Directory. All installed fixtures shall be certified.
§131(a):	Individual Room/Area Controls: Each room and area in this building is equipped with a separate switch or occupancy sensor device for each area with floor-to-ceiling walls.
§131(b):	Uniform Reduction for Individual Rooms: All rooms and areas greater than 100 square feet and more than 0.8 watts per square foot of lighting load shall be controlled with bi-level switching for uniform reduction of lighting within the room.
§131(c):	Daylight Area Control: All rooms with windows and skylights that are greater than 250 square feet and that allow for the effective use of daylight in the area shall have 50% of the lamps in each daylit area controlled by a separate switch; or the effective use of daylight cannot be accomplished because the windows are continuously shaded by a building on the adjacent lot. Diagram of shading during different times of the year is included on plans.
§131(c):	Display Lighting. Display lighting shall be separately switched on circuits that are 20 amps or less.6.

Outdoor Lighting Measures:

§130(c)1:	Mandatory lighting power determination for medium base sockets without permanently installed ballasts
§132(a):	All permanently installed luminaires with lamps rated over 100 Watts either have a lamp efficacy of at least 60 lumens per Watt or are controlled by a motion sensor.
§132(b):	All Luminaires with lamps rated greater than 175 Watts in hardscape area, including parking lots, building entrances, canopies, and all outdoor sales areas meet the Cutoff Requirements.
§132(c)1:	All permanently installed outdoor lighting meets the control requirements listed.
§132(c):	Building facades, parking lots, garages, canopies, and outdoor sales areas meet the Multi-Level Lighting Requirements listed.

all ideas, designs and plans represented by this drawing are the exclusive property of the withee malcolm partnership, architects, and shall not be reproduced in whole or in part without the express prior written permission of said architects, any unauthorized reuse of these plans other than for the project and location shown is prohibited.

job no. A9041.109-P

drawn

submittal

Plan Check Submittal	03.27.2012
Plan Check Re-Submittal	10.29.2012
Issue For Bid	10.29.2012

revision

△1 Client Revisions	10.23.2012

Tenant Improvements / Accessibility Upgrades for :

CITY OF TORRANCE

PERSONNEL BUILDING

3231 Torrance Boulevard, Torrance, CA 90503

OWNER : City of Torrance, Department of General Services
3350 Civic Center Drive, Torrance, CA 90503

WITHEE MALCOLM
ARCHITECTS, LLP

2251 W. 190th Street
Torrance, Ca 90504
t. 310.217.8885
f. 310.217.0425

REGISTERED PROFESSIONAL ENGINEER
JAMES A. MONTROSS
No. E12272
Exp. 9-30-14
ELECTRICAL
STATE OF CALIFORNIA

MONTROSS & ASSOCIATES, INC.
CONSULTING SERVICES
3198-D2 AIRPORT LOOP DR.
COSTA MESA, CA 92626
(949) 553-9005 fax (949) 553-9007

title 24 forms

sheet title

△1 **E-4.1**

sheet

BID SET ONLY

ABBREVIATIONS

ABBR.	DESCRIPTION	ABBR.	DESCRIPTION	ABBR.	DESCRIPTION
ABV	ABOVE	FLA	FULL LOAD AMPERAGE	OFOI	OWNER FURNISHED, OWNER INSTALLED
AD	AREA DRAIN	FLR	FLOOR		
ADA	AMERICAN DISABILITIES ACT.	FPM	FEET PER MINUTE	PC	PLUMBING CONTRACTOR
AFF	ABOVE FINISHED FLOOR	FT	FEET	PIV	POST INDICATOR VALVE
AFG	ABOVE FINISHED GRADE	FTR	FLUE THRU ROOF	POC	POINT OF CONNECTION
AP	ACCESS PANEL	FU	FIXTURE UNITS	POD	POINT OF DISCONNECTION
BEL	BELOW	FUT	FUTURE	PPM	PARTS PER MILLION
BFP	BACK FLOW PREVENTER	FW	FILTERED WATER	PRESS	PRESSURE
BTU	BRITISH THERMAL UNIT	FV	FLUSH VALVE	PRV	PRESSURE REDUCING VALVE
BTUH	BRITISH THERMAL UNIT PER HOUR	G	GAS	PSI	POUNDS PER SQUARE INCH
		GA	GAUGE	PSIG	POUNDS PER SQUARE INCH GAUGE
CAP	CAPACITY	GAL	GALLONS	PTRV	PRESSURE-TEMPERATURE RELIEF VALVE
CD	CONDENSATE	GALV	GALVANIZED	REQ'D	REQUIRED
CFCI	CONTRACTOR FURNISHED, CONTRACTOR INSTALLED	GC	GENERAL CONTRACTOR	RD	ROOF DRAIN
		GPH	GALLONS PER HOUR	RI & C	ROUGH IN & CONNECT
CFH	CUBIC FEET PER HOUR	GPM	GALLONS PER MINUTE	RO	REVERSE OSMOSIS
CFM	CUBIC FEET PER MINUTE	GPR	GAS PRESSURE REGULATOR	RP	REDUCED PRESSURE
CI	CAST IRON	HB	HOSE BIBB	RPM	REVOLUTIONS PER MINUTE
CLG	CEILING	HCP	HANDICAPPED	RVB	RECESSED VALVE BOX
CO	CLEAN-OUT	HDR	HEADER	S	SANITARY SEWER
CONC	CONCRETE	HP	HORSEPOWER	SD	STORM DRAIN
CONN	CONNECTION	HT	HEIGHT	SP	SUMP PUMP
CONT	CONTINUE OR CONTINUATION	HTG	HEATING	SHT	SHEET
		HTR	HEATER	SOV	SHUT-OFF-VALVE
COTG	CLEAN-OUT TO GRADE	HW	HOT WATER	SOV/YB	SHUT-OFF VALVE IN YARD BOX
COYB	CLEAN-OUT IN YARD BOX	HWR	HOT WATER RETURN	SPECS	SPECIFICATIONS
CP	CONDENSATE PUMP	IE	INVERT ELEVATION	SP	STATIC PRESSURE
CW	COLD WATER	IN	INCH	SPKR	SPRINKLER
D	DRAIN	IRR	IRRIGATION	SQ FT	SQUARE FEET
DCW	DOMESTIC COLD WATER	IW	INDIRECT WASTE	SS	STAINLESS STEEL
DF	DRINKING FOUNTAIN	KW	KILOWATT	STL	STEEL
DIA	DIAMETER	LAV	LAVATORY	SLP	SLOPE
DIM	DIMENSIONS	LBS	POUNDS	TDH	TOTAL DYNAMIC HEAD
DN	DOWN	MAX	MAXIMUM	TEMP	TEMPERATURE
DS	DOWN SPOUT	MBH	THOUSAND BTU PER HOUR	TMV	THERMOSTATIC MIXING VALVE
DWG	DRAWING	MECH	MECHANICAL	TP	TRAP PRIMER
EF	EXHAUST FAN	MIN	MINIMUM	TYP	TYPICAL
EL/ELEV	ELEVATION	MH	MANHOLE	UON	UNLESS OTHERWISE NOTED
ELEC	ELECTRICAL	MPG	MEDIUM PRESSURE GAS	UR	URINAL
EQPT	EQUIPMENT	MTD	MOUNTED	UTR	UP THROUGH ROOF
ET	EXPANSION TANK	MUA	MAKE-UP AIR	V	VENT
(E)/EXIST	EXISTING	NC	NORMALLY CLOSED	VB	VACUUM BREAKER
EWC	ELECTRIC WATER COOLER	NIC	NOT IN CONTRACT	VBF	VENT BELOW FLOOR
°F	DEGREES FAHRENHEIT	NO	NORMALLY OPEN	VCP	VERIFIED CLAY PIPE
F	FIRE	NTS	NOT TO SCALE	VTR	VENT THROUGH ROOF
FCO	FLOOR CLEAN OUT	OD	OVERFLOW STORM DRAIN	W	WASTE
FCU	FAN COIL UNIT	OFD	OVERFLOW DRAIN	W/	WITH
FDC	FIRE DEPARTMENT CONNECTION	OFCI	OWNER FURNISHED, CONTRACTOR INSTALLED	WC	WATER CLOSET
FL	FLOW LINE			WHA	WATER HAMMER ARRESTOR

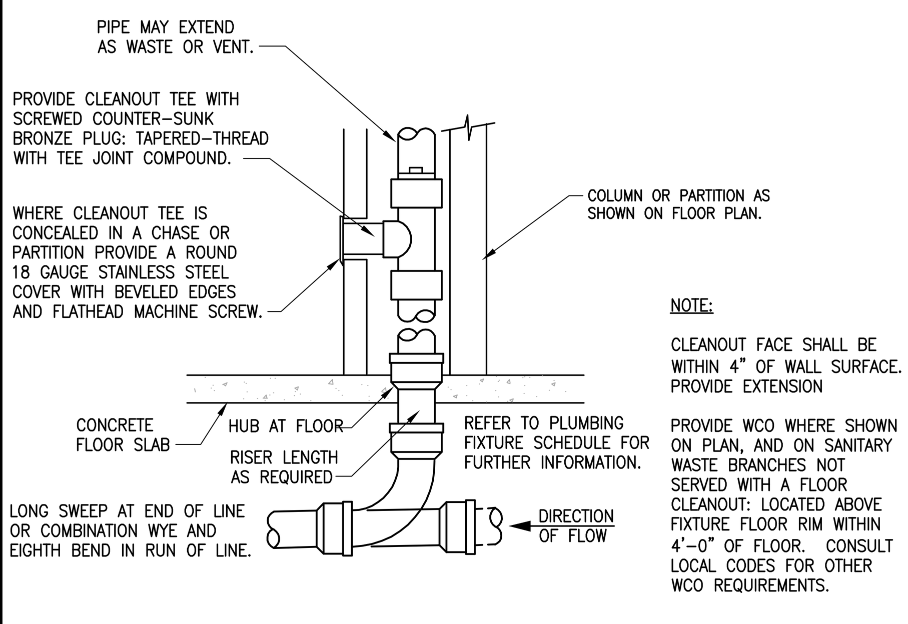

NOTE:

CLEANOUT FACE SHALL BE WITHIN 4" OF WALL SURFACE. PROVIDE EXTENSION

PROVIDE WCO WHERE SHOWN ON PLAN, AND ON SANITARY WASTE BRANCHES NOT SERVED WITH A FLOOR CLEANOUT: LOCATED ABOVE FIXTURE FLOOR RIM WITHIN 4'-0" OF FLOOR. CONSULT LOCAL CODES FOR OTHER WCO REQUIREMENTS.

WALL CLEANOUT
SCALE: NONE — 2 / P1.0

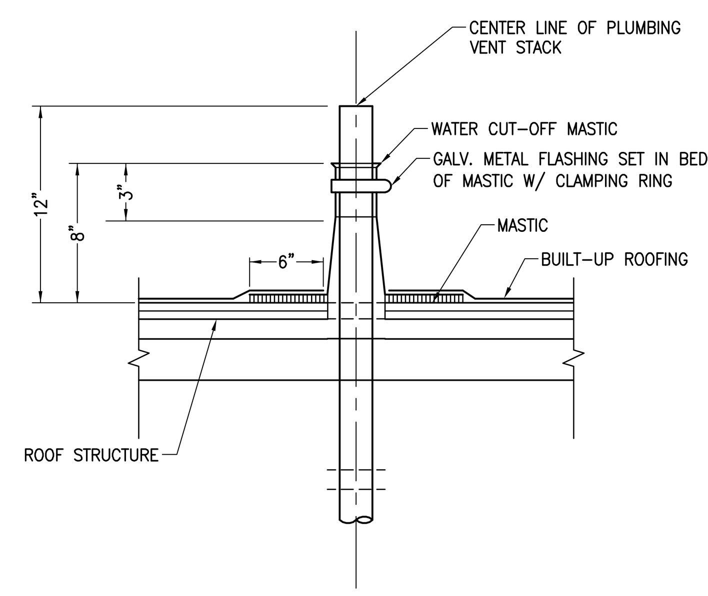

PLUMBING VENT THRU ROOF
SCALE: NONE — 1 / P1.0

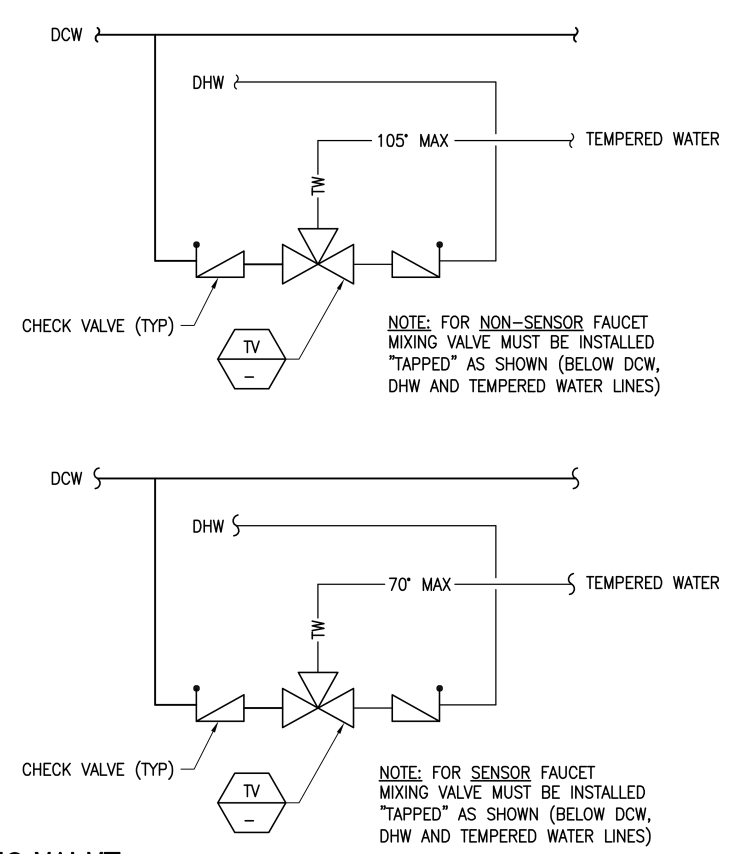

TEMPERING VALVE
SCALE: NONE — 3 / P1.0

FIXTURES SCHEDULE

MARK	FIXTURE	ROUGH-IN-SIZE S/W	V	TRAP	CW	HW	DESCRIPTION/REMARKS
WC 1	WATER CLOSET (ADA)	4"	2"	INT	1-1/2"	–	AMERICAN STANDARD "MADERA" MODEL NO. 2305.100, FLOOR MOUNTED, FLUSH VALVE WATER CLOSET, WITH OLSONITE MODEL NO. 95SSCT OPEN FRONT SEAT LESS COVER. SLOAN "REGAL OPTIMA" MODEL 111-SMO FLUSHOMETER BATTERY POWER. 1.6 GAL/FLUSH.
WC 2	WATER CLOSET	4"	2"	INT	1-1/2"	–	AMERICAN STANDARD "MADERA" MODEL NO. 2234.015, FLOOR MOUNTED, FLUSH VALVE WATER CLOSET, WITH OLSONITE MODEL NO. 95SSCT OPEN FRONT SEAT LESS COVER. SLOAN "REGAL OPTIMA" MODEL 111-SMO FLUSHOMETER BATTERY POWER. 1.6 GAL/FLUSH.
UR 1	URINAL (ADA)	2"	1-1/2"	INT	1"	–	AMERICAN STANDARD "WASHBROOK" MODEL NO. 6590.125, VITREOUS CHINA, WALL MOUNTED URINAL. SLOAN "OPTIMA SMO" MODEL WEUS 1000.1402-0.13 SMO, BATTERY POWERED, 0.13 GAL/FLUSH. ZURN ZR-1222 WALL HANGER; STAINLESS STEEL STRAINER
L 1	LAVATORY (ADA)	2"	1-1/2"	1-1/2"	1/2"	1/2"	AMERICAN STANDARD "AQUALYN" MODEL NO. 0475 COUNTERTOP SINK, VITREOUS CHINA, FRONT OVERFLOW. SLOAN "OPTIMA PLUS" MODEL EBF-85-4-BDM BATTERY POWER DECK MOUNTED FAUCET. CHICAGO NO. 327-X GRID STRAINER. CHICAGO NO. 1017 ANGLE STOP FITTING WITH SUPPLY TUBE; P-TRAP
KS 1	KITCHEN SINK W/ DISPOSER (ADA)	2"	1-1/2"	1-1/2"	1/2"	1/2"	ELKAY NO. LRAD2922 "LUSTERTONE" DOUBLE BOWL SINK, STAINLESS STEEL, SELF-RIMMING, 29"L x 22"W, OFF-CENTERED. ELKAY NO. LK230 CONCEALED MOUNT MIXING FAUCET W/ CAST SWING SPOUT AND AERATOR; ELKAY NO. LK35 DUO STRAINER; P-TRAP; MAYTAG WASTE DISPOSER NO. DFC1500A, ACTIVATE W/ WALL SWITCH 120V, 1/2HP
DF 1	DRINKING FOUNTAIN (ADA)	2"	1-1/2"	1-1/2"	1/2"	–	HAWS MODEL H1119.8 "HI-LO" WALL MOUNTED ELECTRIC WATER COOLER, BARRIER-FREE, 100% LEAD-FREE WATERWAYS. 115V, 60HZ 1PH, 5 FLA
FD 1	FLOOR DRAIN	2"	1-1/2"	1-1/2"	–	–	ZURN NO. ZN-415-S-P, CAST IRON BODY, COMPLETE WITH SQUARE HEEL-PROOF NICKEL-BRONZE TOP, CLAMPING COLLAR, TRAP PRIMER CONNECTION AND P-TRAP
MS 1	MOP SINK	3"	2"	3"	3/4"	3/4"	AMERICAN STANDARD "FLORWELL" MODEL NO. 7745.811 28"x28" ENAMELED CAST IRON, CHICAGO MODEL # 540-LD897SWXFCP WALL MOUNTED SERVICE SINK FAUCET WITH 2-3/8" METAL LEVER HANDLES, VACUUM BREAKER SPOUT, PAIL HOOK, WALL BRACE, 3/4" HOSE THREAD, GRID STRAINER; P-TRAP
TP 1	TRAP PRIMER	–	–	–	1/2"	–	P.P.P. TRAP PRIMER VALVE, BRASS BODY, ADJUSTABLE, COMPLETE W/ 1/2" COPPER TYPE "L" PIPE TO RECEPTOR. INSTALL PER MANUFACTURER'S RECOMMENDATIONS AND COMPLETE BEHIND ACCESS PANEL
WHA 1	WATER HAMMER ARRESTOR	–	–	–	–	–	ZURN Z-1700 SERIES "HYDROTROL" WATER HAMMER ARRESTOR COMPLETE BEHIND ACCESS PANEL. INSTALL PER MANUFACTURER'S RECOMMENDATION
TV 1	TEMPERING VALVE	–	–	–	–	–	WATTS 1/2" NO. LFMMV SERIES. INSTALL PER MANUFACTURER'S REQUIREMENTS.

THESE DRAWINGS ARE ESSENTIALLY DIAGRAMMATIC, DEPICTING FUNCTION AND PLACEMENT. PROVIDE OFFSETS IN PIPING AND CHANGES IN FIXTURE LOCATIONS AS NECESSARY TO CONFORM TO STRUCTURAL AND ARCHITECTURAL REQUIREMENTS AND TO AVOID OBSTRUCTIONS. CHANGES TO ACCOMMODATE INSTALLATION OF THIS WORK WITH OTHER WORK, IN ORDER TO MEET ARCHITECTURAL OR STRUCTURAL CONDITIONS, SHALL BE MADE WITHOUT ADDITIONAL COST TO OWNER.

EQUIPMENT SUBSTITUTIONS

SUBSTITUTIONS WILL NOT BE ALLOWED UNLESS AUTHORIZED IN WRITING BY THE ARCHITECT, ENGINEER AND OWNER. THE CONTRACTOR IS COMPLETELY AND SOLELY RESPONSIBLE FOR ALL ASPECTS OF THE SUBSTITUTION INCLUDING UPDATING CONSTRUCTION DOCUMENTS, OBTAINING APPROVALS AND PERMITS FROM THE LOCAL AUTHORITY, AND COORDINATING WITH ALL TRADES TO ENSURE CHANGES TO AFFECTED BUILDING SYSTEMS ARE ACCOUNTED FOR AND ACCEPTABLE TO THE ENGINEERING TEAM. IF SUBSTITUTED EQUIPMENT REQUIRES ADDITIONAL ENGINEERING, CONTRACTOR SHALL BE RESPONSIBLE FOR PAYING FEES TO THE ENGINEERING TEAM. CONTRACTOR SHALL ENSURE SUBSTITUTED EQUIPMENT MEETS OR EXCEEDS DESIGN INTENT REGARDING RATINGS, PERFORMANCE, DIMENSIONAL CLEARANCES, PHYSICAL DIMENSIONS (MAX/MIN), WEIGHT LIMITATIONS, AND OTHER ASPECTS, PROVING SUBSTITUTION IS SUITABLE TO THE APPLICATION. ENGINEERS WILL REVIEW THE RATING AND PERFORMANCE OF SUBSTITUTED EQUIPMENT ONLY AND WILL NOT ASSUME RESPONSIBILITY FOR SUBSTITUTION AT ANY LEVEL.

IF CONTRACTOR CAN NOT MAKE SUBSTITUTED EQUIPMENT WORK IN THIS PROJECT, CONTRACTOR SHALL REVERT TO REQUIREMENTS OF PERMITTED CONSTRUCTION DOCUMENTS AT THEIR EXPENSE.

IT IS UNDERSTOOD BY ALL PARTIES THAT ANY SUBSTITUTIONS OF SPECIFIED PRODUCTS ARE DONE FOR THE PURPOSE OF COST SAVINGS TO THE OWNER. THEREFORE, ANY MATERIAL SUBSTITUTIONS OR DEVIATIONS PROPOSED BY THE CONTRACTOR SHALL BE INCLUDED WITH THE INITIAL BID AND SHALL SHOW A LINE ITEM CREDIT TO THE OWNER FOR EACH ITEM SUBSTITUTED IN LIEU OF SPECIFIED PRODUCTS.

VERIFY FIELD CONNECTIONS

THESE DESIGN DRAWINGS ARE SCHEMATIC. CONTRACTOR SHALL VISIT THE SITE PRIOR TO BIDDING OR AWARD OF CONTRACT TO INSPECT EXISTING FIELD CONDITIONS. CONTRACTOR SHALL INCLUDE ALL LABOR AND MATERIALS NECESSARY FOR FIELD MODIFICATIONS DUE TO EXISTING CONDITIONS NOT INDICATED ON THESE PLANS.

CONTRACTOR SHALL CONTACT THE ARCHITECT, ENGINEER OR OWNER PRIOR TO BIDDING FOR INTERPRETATIONS AND CLARIFICATIONS OF THE DESIGN AND INCLUDE IN THE BID ALL COSTS TO MEET THE DESIGN INTENT OF THESE PLANS. CLARIFICATIONS MADE BY THE ARCHITECT, ENGINEER OR OWNER AFTER BIDDING WILL BE FINAL AND SHALL BE IMPLEMENTED AT CONTRACTOR'S COST.

BIDDING CONTRACTORS SHALL HAVE A WORKING KNOWLEDGE OF LOCAL CODES AND ORDINANCES AND SHALL INCLUDE IN THE BID THE COSTS FOR ALL WORK INSTALLED IN STRICT ACCORDANCE WITH THE GOVERNING CODES, THE PLANS AND SPECIFICATIONS NOT WITHSTANDING. CONTRACTOR SHALL ALERT THE ARCHITECT, ENGINEER OR OWNER OF ANY APPARENT DISCREPANCIES BETWEEN GOVERNING CODES AND DESIGN INTENT.

CONTRACTOR SHALL CONTACT WATER, GAS & SEWAGE COMPANY IMMEDIATELY UPON RECEIVING CONTRACT TO COORDINATE GAS, WATER METER SERVICE INSTALLATION AND SEWAGE CONNECTION POINT.

DOMESTIC PIPING MATERIALS SCHEDULE

SERVICE		TYPE "K" COPPER WROUGHT COPPER FITTINGS	TYPE "L" COPPER WROUGHT COPPER FITTINGS	TYPE "M" COPPER WROUGHT COPPER FITTINGS	BLACK STEEL SCH 80 PIPE & FITTINGS	SCH 40 BLACK STEEL MALLEABLE IRON FITTINGS	SCH 40 GALVANIZED STEEL SCREWED FITTINGS	*CAST IRON "NO HUB" PIPE & FITTINGS "HUSKY" SS COUPLINGS (1)	VITRIFIED CLAY COMPRESSION JOINTS	SCH 40 PVC DWV (APPROVED BY LOCAL AUTHORITY)	ABS PIPE & FITTINGS (APPROVED BY LOCAL AUTHORITY)	PE PIPE & FITTINGS (APPROVED BY LOCAL AUTHORITY)	PVDF, PP OR FUSEAL (IF PERMITTED BY LOCAL CODE)	REMARKS
WATER	ABV. GRADE		●											
	BEL. GRADE	●												INSULATED AND WRAPPED BELOW GRADE. SEE NOTE #3.
SANITARY DRAINAGE	ABV. GRADE							●						
	BEL. GRADE							●		●				COATED & WRAPPED BELOW GRADE IF CAST. SEE NOTE #3.
SANITARY VENT	ABV. GRADE							●						
	BEL. GRADE							●		●				COATED & WRAPPED BELOW GRADE IF CAST. SEE NOTE #3.
INDIRECT WASTE/ CONDENSATE	ABV. GRADE			●										
	BEL. GRADE			●										INSULATED AND WRAPPED BELOW GRADE. SEE NOTE #3.

(1) ALL BELOW OR ABOVE GRADE WASTE, VENT, SEWER AND STORM LINES SHALL BE OF CAST IRON SOIL PIPE AND FITTINGS AND SHALL CONFORM TO THE REQUIREMENTS OF CISPI STANDARD 301, ASTM A888 OR ASTM A74 FOR ALL PIPE AND FITTINGS. PIPE AND FITTINGS SHALL BE MARKED WITH THE COLLECTIVE TRADEMARK OF THE CAST IRON SOIL PIPE INSTITUTE AND MANUFACTURED BY AB&I, CHARLOTTE OR TYLER OR RECEIVE PRIOR APPROVAL OF THE ENGINEER. JOINTS FOR HUBLESS PIPE AND FITTINGS SHALL CONFORM TO THE MANUFACTURER'S INSTALLATION INSTRUCTIONS, THE CISPI STANDARD 310 AND LOCAL CODE REQUIREMENTS. HUBLESS COUPLING GASKETS SHALL CONFORM TO ASTM STANDARD C-564. JOINTS FOR HUB AND SPIGOT PIPE SHALL BE INSTALLED WITH COMPRESSION GASKETS CONFORMING TO THE REQUIREMENTS OF ASTM STANDARD C-564 OR SHALL BE INSTALLED WITH LEAD AND OAKUM.

(2) USE PVC IF SOIL IS CORROSIVE WITH THE APPROVAL BY THE OWNER/ENGINEER/ARCHITECT AND LOCAL AUTHORITY.

(3) ALL NON-PLASTIC PIPING SHALL BE AT 18" MINIMUM BELOW GRADE. ALL PLASTIC PIPING SHALL BE 24" MINIMUM BELOW GRADE. VERIFY DEPTH REQUIREMENTS WITH LOCAL AUTHORITY.

GENERAL NOTES

1 THE PLUMBING SYSTEM DESIGN, INSTALLATION AND MATERIALS SHALL CONFORM TO THE CURRENT EDITION OF THE CALIFORNIA PLUMBING CODE 2010, UNIFORM PLUMBING CODE 2009 AND ALL APPLICABLE FEDERAL, STATE, AND LOCAL CODES AND ALL AUTHORITIES HAVING JURISDICTION.

2 WORKMANSHIP: THE WORK SHALL BE ACCOMPLISHED IN A THOROUGH & WORKMANLIKE MANNER SATISFACTORY TO AND MEETING THE APPROVAL OF THE ARCHITECT'S & OWNER'S REPRESENTATIVE.

3 MATERIALS: PLUMBING QUALITY AND WEIGHTS OF MATERIALS, ALTERNATE METHODS OF CONSTRUCTION SHALL CONFORM TO CHAPTER 2 OF THE CURRENT EDITION OF THE PLUMBING CODE. ALL MATERIAL AND FIXTURES SHALL BE NEW FIRST QUALITY, UNLESS OTHERWISE NOTED, AND OF THE BEST GRADE OF THE RESPECTIVE KIND AND FREE FROM ALL DEFECTS. MATERIALS FOR SIMILAR USE SHALL BE OF THE SAME TYPE AND MANUFACTURER UNLESS OTHERWISE SPECIFIED.

4 SITE INSPECTION: CONTRACTOR SHALL VISIT THE SITE OF WORK PRIOR TO SUBMISSION OF HIS BID AND THOROUGHLY FAMILIARIZE HIMSELF WITH THE WORKING CONDITIONS AND EXACT NATURE OF THE WORK. SUBMISSION OF A BID ACKNOWLEDGES FULL RESPONSIBILITY FOR FURNISHING A COMPLETE & FUNCTIONAL SYSTEM. NO CHANGES IN CONTRACT WILL BE MADE TO ACCOMMODATE OR ALLOW EXTRA FUNDING FOR ANY OMISSIONS WHICH RESULTS FROM A FAILURE TO THOROUGHLY MAKE THE EXAMINATION.

5 CODES AND PERMITS: ALL EQUIPMENT, FIXTURES, INSTALLATION, ETC. SHALL CONFORM TO ALL APPLICABLE CODES AND ORDINANCES, INCLUDING CALIFORNIA TITLE 24. CONTRACTOR SHALL OBTAIN AND PAY FOR ALL PERMITS AND INSPECTIONS.

6 AS-BUILT: CONTRACTOR SHALL PROVIDE A COMPLETE SET OF AS-BUILT TRANSPARENCIES WITH ALL CHANGES NOTED THEREON AT THE COMPLETION OF THE PROJECT.

7 GUARANTEE: CONTRACTOR SHALL UNCONDITIONALLY GUARANTEE ALL LABOR AND MATERIAL ON ALL WORK AGAINST DEFECTS IN WORKMANSHIP & MATERIALS FOR A PERIOD OF 1 YEAR FROM ACCEPTANCE OF WORK BY OWNER.

8 SUBMITTALS: CATALOG INFORMATION & CUTS OF ALL EQUIPMENT FIXTURES AND DEVICES SHALL BE SUBMITTED FOR REVIEW (SIX COPIES OF EACH).

9 COORDINATION: THE DRAWINGS ARE DIAGRAMMATIC & INTENDED TO SHOW SCOPE. CONTRACTOR SHALL COORDINATE HIS WORK WITH OTHER TRADES TO PROVIDE THE BEST ARRANGEMENT OF ALL DUCT, PIPES, CONDUIT, STRUCTURE, ETC.

10 CUTTING AND PATCHING: ALL CUTTING & PATCHING OF THE EXISTING STRUCTURE SHALL BE PROVIDED UNDER OTHER SECTIONS OF THE WORK. PROVIDE ALL NECESSARY REQUIREMENTS TO THE PROJECT SUPERINTENDENT.

11 CLEANUP: UPON COMPLETION OF THE WORK, THE CONTRACTOR SHALL REMOVE ALL SURPLUS MATERIALS, EQUIPMENT & DEBRIS INCIDENTAL TO THIS WORK AND LEAVE THE PREMISES CLEAN AND ORDERLY.

12 ALL BELOW OR ABOVE GRADE WASTE, VENT, SEWER AND STORM LINES SHALL BE OF CAST IRON SOIL PIPE AND FITTINGS AND SHALL CONFORM TO THE REQUIREMENTS OF CISPI STANDARD 301, ASTM A888 OR ASTM A74 FOR ALL PIPE AND FITTINGS. PIPE AND FITTINGS SHALL BE MARKED WITH THE COLLECTIVE TRADEMARK OF THE CAST IRON SOIL PIPE INSTITUTE AND MANUFACTURED BY AB&I, CHARLOTTE OR TYLER OR RECEIVE PRIOR APPROVAL OF THE ENGINEER. JOINTS FOR HUBLESS PIPE AND FITTINGS SHALL CONFORM TO THE MANUFACTURER'S INSTALLATION INSTRUCTIONS, THE CISPI STANDARD 310 AND LOCAL CODE REQUIREMENTS. HUBLESS COUPLING GASKETS SHALL CONFORM TO ASTM STANDARD C-564. JOINTS FOR HUB AND SPIGOT PIPE SHALL BE INSTALLED WITH COMPRESSION GASKETS CONFORMING TO THE REQUIREMENTS OF ASTM STANDARD C-564 OR SHALL BE INSTALLED WITH LEAD AND OAKUM.

13 SLOPE ALL CONDENSATE DRAIN LINES AT 1%.

14 SLOPE ALL SANITARY SEWER AND VENT PIPING MINIMUM 2% UNLESS APPROVED OTHERWISE.

15 SLOPE ALL STORM DRAIN PIPING MINIMUM 2% UNLESS APPROVED OTHERWISE.

16 THE GAS SERVICE SEISMIC SHUT OFF SHALL BE MOUNTED RIGIDLY TO THE EXTERIOR OF THE BUILDING OR STRUCTURE CONTAINING THE FUEL GAS PIPING.

17 PROVIDE WATERTIGHT FLASHING WHERE EVER PIPES PASS THRU EXTERIOR WALLS, ROOF AND FLOORS.

18 PROVIDE FELT WITH METAL BACKING, VIBRATION ISOLATION SLEEVES OR PADS AT ALL PIPE HANGERS OR SUPPORTS AND ALL POINTS WHERE PIPING COMES IN CONTACT WITH ANY PORTION OF THE STRUCTURE. APPLIES TO ALL PIPING.

19 LOCATIONS OF EXISTING UTILITIES SHOWN ARE APPROXIMATE. CONTRACTOR SHALL VERIFY EXACT LOCATIONS AND DEPTHS OF EXISTING UTILITIES PRIOR TO STARTING WORK. MAKE REQUIRED ADJUSTMENTS TO CONNECT TO EXISTING UTILITIES. IF INDICATED POINTS OF CONNECTION CANNOT BE MADE TO EXISTING UTILITIES AS FOUND, THE CONTRACTOR SHALL, BEFORE CONTINUING, NOTIFY THE ARCHITECT'S & OWNER'S REPRESENTATIVE PRIOR TO INSTALLING ANY WORK WHICH MAY BE AFFECTED.

20 NO HOLES, NOTCHES, BLOCK OUTS, ETC. ARE ALLOWED IN STRUCTURAL ELEMENTS UNLESS DETAILED ON THE STRUCTURAL DRAWINGS OR APPROVED BY THE STRUCTURAL ENGINEER.

21 ALL PLUMBING FIXTURE LOCATIONS AND LINE ROUTING ARE DIAGRAMMATIC. ROUTING INDICATED AVOIDS MAJOR KNOWN OBSTRUCTIONS. ALL NEW PIPING WORK SHOULD BE REROUTED AND/OR OFFSET TO AVOID INTERFERENCES. CONTRACTOR SHALL REFER TO ARCHITECTURAL DRAWINGS FOR EXACT LOCATIONS, MOUNTING HEIGHTS, AND COLORS.

22 ANY DEVIATIONS FROM THE DRAWINGS OR SPECIFICATIONS SHALL BE BROUGHT TO THE ATTENTION OF THE ARCHITECT AND ENGINEER PRIOR TO INSTALLATION. CONTRACTOR SHALL OBTAIN WRITTEN APPROVAL OF ANY AND ALL CHANGES FROM ARCHITECT AND ENGINEER PRIOR TO PROCUREMENT.

23 THESE DRAWINGS DO NOT INCLUDE ALL NECESSARY SAFETY REQUIREMENTS. CONTRACTOR TO COMPLY TO SAFETY REQUIREMENTS SET FORTH BY THE LOCAL AUTHORITIES HAVING JURISDICTION.

24 CONTRACTOR SHALL ASSUME RESPONSIBILITY FOR LOCATION OF POINTS OF CONNECTION WITHIN A FIFTEEN (15) FOOT RADIUS FROM THOSE SHOWN ON PLANS. THE PLUMBING CONTRACTOR SHALL VERIFY THE EXACT LOCATION, SIZE AND ELEVATION OF ALL EXISTING LINES, WYES, ETC., BEFORE STARTING ANY WORK, AND SHALL NOTIFY THE GENERAL CONTRACTOR IF SAID LOCATIONS ARE NOT IN THE LOCATIONS SHOWN ON THE PLANS OR ARE NOT OF SUFFICIENT SIZE OR DEPTH TO MAKE CONNECTION IN COMPLIANCE WITH THE PLANS.

25 CONTRACTOR TO REFER TO PLUMBING FIXTURE SCHEDULE FOR INDIVIDUAL WASTE, VENT & WATER ROUGH-IN CONNECTIONS AT EACH PLUMBING FIXTURE.

26 ALL HOT WATER AND CONDENSATE PIPING SHALL BE INSULATED WITH GLASS FIBER PIPE INSULATION WITH FACTORY APPLIED WHITE JACKET J-M MICRO-LOK 650AP. INSULATE FITTINGS AND VALVES WITH PREFORMED INSULATION WITH PVC PREMOLDED ONE PIECE FITTING.

PIPE SIZE	INSULATION THICKNESS	INSULATION VALUE
1/2" - 1"	1"	R = 4.0
1 1/4" - 4"	1 1/2"	R = 4.0

27 TEST SYSTEM(S) IN ACCORDANCE WITH REQUIREMENTS OF THE GOVERNING AUTHORITIES.

28 STEEL PLATE SUPPORTS FOR ALL WALL FIXTURES: SUPPORT WITH 3/8" THICK x 8" HIGH STEEL PLATES RECESSED AND BOLTED TO STUDS AND TAPPED FOR FIXTURE BOLTS. LENGTH OF PLATE SHALL BE AT LEAST ONE STUD BEYOND EACH SIDE OF FIXTURE.

29 ALL PLUMBING WORK SHALL BE INSTALLED SO AS TO AVOID INTERFERENCE WITH ELECTRICAL AND MECHANICAL EQUIPMENT AND STRUCTURAL FRAMING.

30 COORDINATE THE LOCATION OF ALL CEILING OR WALL ACCESS PANELS WITH THE ARCHITECTURAL PLANS AND THE ELECTRICAL LIGHTING LAYOUT.

31 CLEANOUTS SHALL BE PROVIDED FOR EACH 100 FEET OF DRAINAGE PIPE WITH ADDITIONAL CLEANOUTS PROVIDED FOR EACH AGGREGATE CHANGE OF DIRECTION EXCEEDING 135°" PER CODE. ALL CLEANOUTS SHALL BE INSTALLED WHERE READILY ACCESSIBLE. THE CONTRACTOR SHALL COORDINATE ALL CLEANOUT LOCATIONS WITH EQUIPMENT, CABINETS, ETC., AND THE ARCHITECT PRIOR TO ANY INSTALLATION.

32 ALL VALVES, UNIONS, ETC. TO BE LINE SIZE UNLESS OTHERWISE INDICATED ON DRAWINGS.

33 UNIONS SHALL BE PROVIDED AND INSTALLED AFTER EACH THREADED TYPE VALVE AND PRIOR TO EQUIPMENT CONNECTIONS.

34 ALL PLUMBING FIXTURES, AND FAUCETS SHALL BE CERTIFIED BY THE STATE OF CALIFORNIA ENERGY COMMISSION.

35 THE PLUMBING CONTRACTOR SHALL COORDINATE ALL REQUIREMENTS FOR ALL POINTS OF CONNECTION WITH THE GENERAL CONTRACTOR AND OTHER TRADES PRIOR TO BID.

36 VERIFY EXACT LOCATION AND SIZE OF ALL EXISTING UTILITIES TO WHICH CONNECTIONS ARE REQUIRED PRIOR TO ROUTING ANY PIPE.

37 PLUMBING CONTRACTOR SHALL PATCH AND REPAIR ALL SURFACE AREAS DAMAGED BY OPERATION.

38 FIRE SAFE ALL PIPE PENETRATIONS THROUGH FIRE RATED WALLS AND FLOORS WITH U.L. LISTED FIRE RATING APPROVED BY THE GOVERNING JURISDICTION. INSTALL IN ACCORDANCE WITH THE PRODUCTS LISTING AND MANUFACTURERS REQUIREMENTS.

39 FIXTURE MOUNTING HEIGHTS FOR THE PHYSICALLY DISABLED SHALL CONFORM TO THE ADA ACCESSIBILITY STANDARDS. SEE ARCHITECTS DRAWINGS.

40 CONTRACTOR SHALL HAVE A COMPLETE SET OF RECORD DRAWINGS ON THE SITE PRIOR TO START OF CONSTRUCTION AND SHALL BE RESPONSIBLE FOR COORDINATION OF NEW WORK WITH EXISTING CONDITIONS.

41 ALL EXPOSED PIPING BELOW LAVATORIES (INCLUDING P-TRAPS) SHALL BE INSULATED TO CONFORM TO THE FEDERAL AND LOCAL ADA ACCESSABILITY STANDARDS. PROVIDE TRUEBRO LAVGUARD2 OR EQUAL.

42 CONTRACTOR TO VERIFY TERMINATION POINTS OF ALL PLUMBING VENTS AND MECHANICAL EQUIPMENT AND ROUTE VENTS AS REQUIRED SO THAT NO PLUMBING VENT SHALL TERMINATE LESS THAN 3'-0" ABOVE ANY FRESH AIR INTAKE LOCATED WITHIN 10'-0" OR LESS THAN 4'-0" FROM ANY PROPERTY LINE EXCEPT A PUBLIC WAY.

43 ALL BUILDING WATER SUPPLY SYSTEMS IN WHICH QUICK CLOSING VALVES ARE INSTALLED SHALL BE PROVIDED WITH DEVICES TO ABSORB HIGH PRESSURES RESULTING FROM THE QUICK CLOSING OF THESE VALVES. CONTRACTOR SHALL INSTALL ALL NECESSARY WATER HAMMER ARRESTORS WHETHER SHOWN ON THE PLANS OR NOT. COORDINATE ACCESS DOOR INSTALLATION WITH GC IF REQUIRED.

44 PROVIDE DI-ELECTRIC UNIONS FOR ALL DISSIMILAR METAL CONNECTIONS.

45 PROVIDE GAS PRESSURE IDENTIFICATION METAL TAG AT REGULATOR AND PIPES. LABEL "WARNING: 1/2 TO 5 POUNDS NATURAL GAS PRESSURE. DO NOT REMOVE".

46 ALL REQUIRED CLEANOUTS SHALL BE INSTALLED AS PER SEC. 707.0 & 719.0 OF THE PLUMBING CODE.

47 EACH PLUMBING VENT SHALL BE TERMINATED NOT LESS THAN TEN (10) FEET FROM OR AT LEAST THREE (3) FEET ABOVE ANY WINDOW, DOOR, OPENING, AIR INTAKE OR VENT SHAFT.

48 PIPING TESTING AND STERILIZATION TO BE IN ACCORDANCE WITH THE PLUMBING CODE. CONTRACTOR TO PROVIDE STERILIZATION CERTIFICATE.

PIPE LEGEND

LINE LABEL	DESCRIPTION
F	FIRE PROTECTION WATER SUPPLY
ICW	INDUSTRIAL COLD WATER
IHW	INDUSTRIAL HOT WATER
IHWR	INDUSTRIAL HOT WATER RETURN
	DOMESTIC COLD WATER ABOVE FLOOR OR GRADE (DCW)
	DOMESTIC COLD WATER BELOW FLOOR OR GRADE (DCW)
	DOMESTIC HOT WATER ABOVE FLOOR OR GRADE (DHW)
	DOMESTIC HOT WATER BELOW FLOOR OR GRADE (DHW)
	DOMESTIC HOT WATER RETURN ABOVE FLOOR OR GRADE (HWR)
	DOMESTIC HOT WATER RETURN BELOW FLOOR OR GRADE (HWR)
TW	TEMPERED WATER (110°F)
TWR	TEMPERED WATER RETURN
CWS	COLD WATER SOFT
CWF	COLD WATER FILTER
RO	REVERSE OSMOSIS
RCW	RECLAIMED WATER
	SOIL OR WASTE ABOVE FLOOR OR GRADE (S OR W)
	SOIL OR WASTE BELOW FLOOR OR GRADE (S OR W)
	VENT (V) ABOVE GRADE
	VENT (V) BELOW GRADE
GW	GREASE WASTE ABOVE FLOOR OR GRADE (GW)
GW	GREASE WASTE BELOW FLOOR OR GRADE (GW)
CWV	COMBINATION WASTE & VENT ABOVE FLOOR OR GRADE (CWV)
CWV	COMBINATION WASTE & VENT BELOW FLOOR OR GRADE (CWV)
CD	CONDENSATE DRAIN PIPE (CD)
PD	PUMP DISCHARGE LINE (PD)
ED	EMERGENCY DRAIN (ED)
ID	INDIRECT DRAIN (ID)
OD	OVERFLOW DRAIN ABOVE GRADE (SD)
OD	OVERFLOW DRAIN BELOW GRADE (SD)
SD	STORM DRAIN ABOVE GRADE (SD)
SD	STORM DRAIN BELOW GRADE (SD)
G	LOW PRESSURE GAS ABOVE GRADE (G)
G	LOW PRESSURE GAS BELOW GRADE (G)
MPG	MEDIUM PRESSURE GAS ABOVE GRADE (MPG)
MPG	MEDIUM PRESSURE GAS BELOW GRADE (MPG)
HPG	HIGH PRESSURE GAS ABOVE GRADE (HPG)
HPG	HIGH PRESSURE GAS BELOW GRADE (HPG)
LPG	LIQUIFIED PETROLEUM GAS - PROPANE
ECW	EXISTING COLD WATER
EHW	EXISTING HOT WATER
EG	EXISTING GAS
ES/W	EXISTING SOIL/WASTE
	PLUMBING TO BE REMOVED

SYMBOL LEGEND

SYMBOL	DESCRIPTION
	VALVE IN RISER
	BRANCH - TOP CONNECTION
	BRANCH - BOTTOM CONNECTION
	SHUT-OFF VALVE (S.O.V.) OR GATE VALVE
	GAS PRESS. REGULATOR (G.P.R.)
	GAS COCK
	UNION
	PRESSURE GUAGE WITH GUAGE COCK
	DROP
	DROP
	RISE
	CAP
	FLOOR CLEAN OUT (FCO) OR CLEANOUT TO GRADE (COTG)
	WALL CLEAN OUT (WCO)
	CLEAN OUT IN YARD BOX
	P-TRAP
	SLOPE IN DIRECTION OF FLOW
	TRAP PRIMER
	WATER HAMMER ARRESTOR (WHA)
	CHECK VALVE
	SOLENOID VALVE
	TEMPERATURE-PRESSURE RELIEF VALVE (TPV)
	HOSE BIBB (HB)
	REDUCED PRESSURE BACKFLOW PREVENTER (RPBP)
	POINT OF CONNECTION/ POINT OF DISCONNECTION
B/S	BELOW SLAB
(E)	EXISTING EQUIPMENT, PIPING, STRUCTURE, ETC.
AFF	ABOVE FINISHED FLOOR
(N)	NEW EQUIPMENT, PIPING, STRUCTURE, ETC.
U/G	UNDERGROUND
X	REFERENCES KITCHEN EQUIPMENT SCHEDULE
X	REFERENCES PLAN NOTES
X / XX	REFERENCES PLUMBING FIXTURE SCHEDULE

all ideas, designs and plans represented by this drawing are the exclusive property of the withee malcolm partnership, architects, and shall not be reproduced in whole or in part without the express prior written permission of said architects, any unauthorized reuse of these plans other than for the project and location shown is prohibited.

job no.	A9041.109-P
drawn	
submittal	
Plan Check Submittal	03.27.2012
Plan Check Re-Submittal	10.29.2012
Issue For Bid	10.29.2012
revision	
1 Client Revisions	10.23.2012

Tenant Improvements / Accessibility Upgrades for :
CITY OF TORRANCE
PERSONNEL BUILDING
3231 Torrance Boulevard, Torrance, CA 90503

OWNER : City of Torrance, Department of General Services
3350 Civic Center Drive, Torrance, CA 90503

WITHEE MALCOLM ARCHITECTS, LLP
2251 W. 190th Street
Torrance, Ca 90504
t. 310.217.8885
f. 310.217.0425

REGISTERED PROFESSIONAL ENGINEER DAVID E. FUSCO M 029332 EXP. 06/30/14 MECHANICAL STATE OF CALIFORNIA

MONTROSS & ASSOCIATES, INC.
CONSULTING SERVICES
3198-D2 AIRPORT LOOP DR.
COSTA MESA, CA 92626
(949) 553-9005 fax (949) 553-9007

general notes, legend, abbreviations & schedules
sheet title

P-1.0
sheet

BID SET ONLY

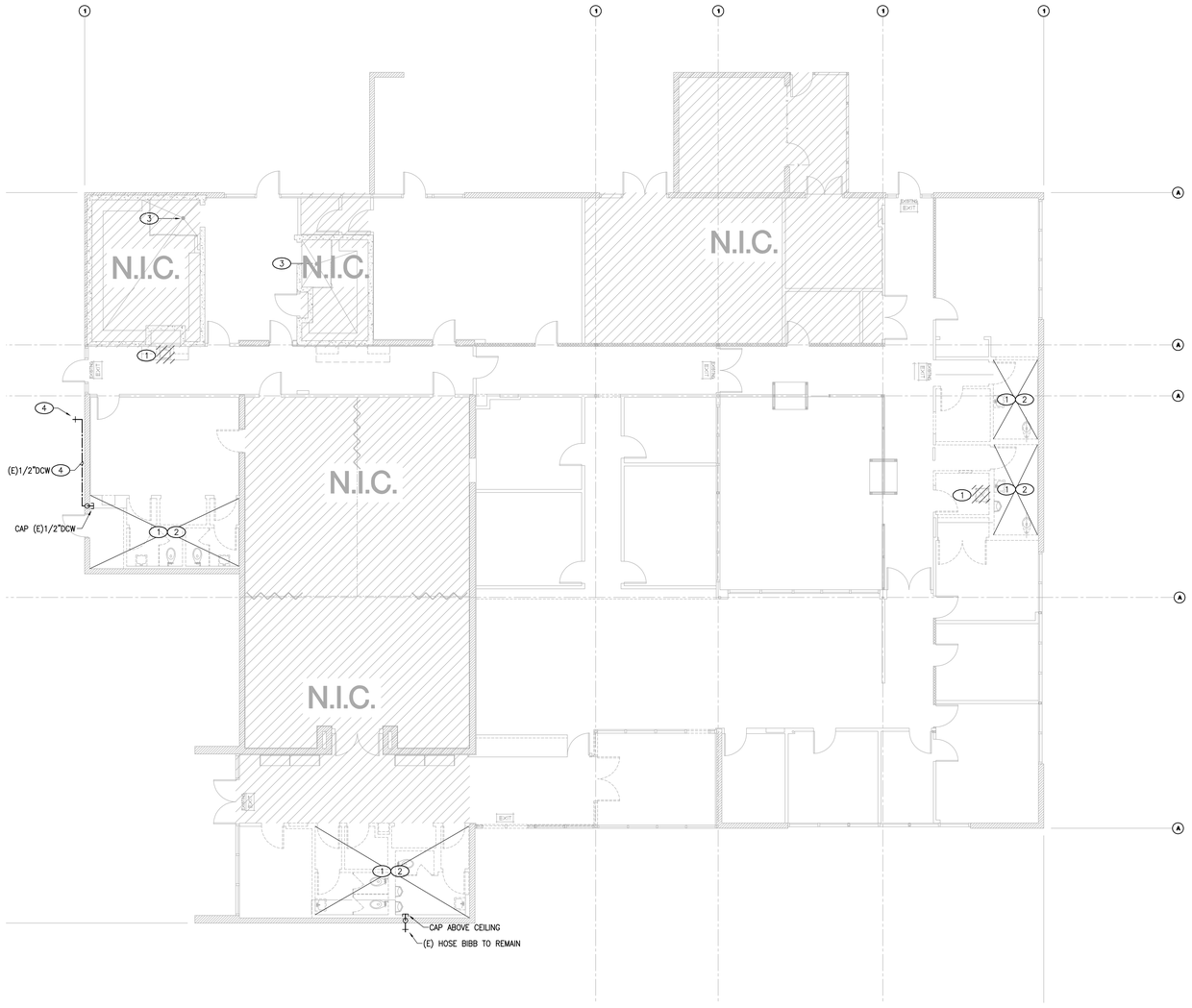

plumbing plan
SCALE: 1/8"=1'-0"

scale: 1/8" = 1'-0"
0 8 16 24 32

NORTH

KEYED NOTES

1. COMPLETELY DEMO AND CLEAR SPACE OF ALL PLUMBING FIXTURES. REMOVE ALL ASSOCIATED WASTE, WATER, VENT, PIPING, ETC. CAP ALL WASTE BELOW FLOOR, WATER, GAS AND VENT ABOVE CEILING. ALL PLUMBING FIXTURES SHALL BE OFFERED TO OWNER. PATCH AND REPAIR WALLS, CEILING AND ROOF TO MATCH EXISTING. ALL ABOVE PIPING NOT TO BE RE-USED OR TO BE ABANDONED SHALL BE REMOVED, VERIFY IN FIELD.
2. EXISTING MAIN COLD WATER, HOT WATER, WASTE & VENT PIPING SHALL REMAIN AND BE REUSED. FIELD VERIFY FOR EXACT LOCATION.
3. EXISTING PLUMBING FIXTURE SHALL REMAIN.
4. EXISTING 1/2"DCW TO VENDING MACHINE SHALL REMAIN.

job no.	A9041109-P
drawn	
submittal	
Plan Check Submittal	03.27.2012
Plan Check Re-Submittal	10.29.2012
Issue For Bid	10.29.2012
revision	
1 Client Revisions	10.23.2012

all ideas, designs and plans represented by this drawing are the exclusive property of the withee malcolm partnership, architects, and shall not be reproduced in whole or in part without the express prior written permission of said architects, any unauthorized reuse of these plans other than for the project and location shown is prohibited.

Tenant Improvements / Accessibility Upgrades for :

CITY OF TORRANCE

PERSONNEL BUILDING

3231 Torrance Boulevard, Torrance, CA 90503

OWNER : City of Torrance, Department of General Services
3350 Civic Center Drive, Torrance, CA 90503

WITHEE MALCOLM
ARCHITECTS, LLP

2251 W. 190th Street
Torrance, Ca 90504
t. 310.217.8885
f. 310.217.0425

REGISTERED PROFESSIONAL ENGINEER
DAVID E. MONTROSE
M 029332
EXP: 06/30/14
MECHANICAL
STATE OF CALIFORNIA

MONTROSE & ASSOCIATES, INC.
CONSULTING SERVICES
3186-D2 AIRPORT LOOP DR.
COSTA MESA, CA 92626
(949) 553-9005 fax (949) 553-9007

sheet title: **demolition plan**

sheet: **P-1.1**

BID SET ONLY

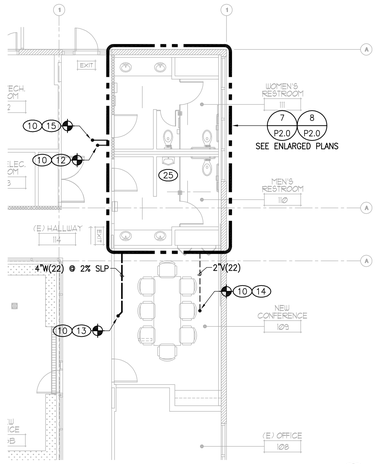

partial alternative reconstruction plan — 2
SCALE: 1/8"=1'-0"

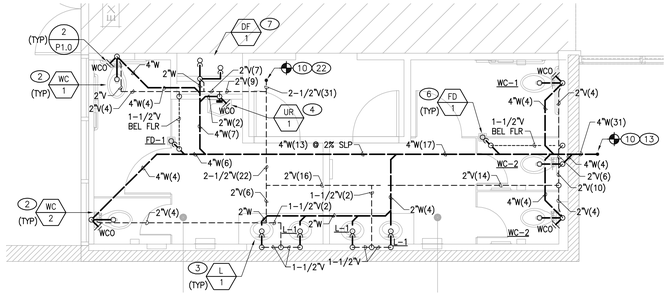

enlarged waste & vent plan — 3
SCALE: 1/4"=1'-0"

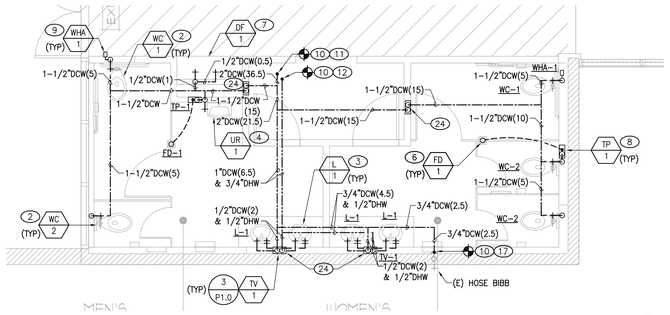

enlarged water supply plan — 4
SCALE: 1/4"=1'-0"

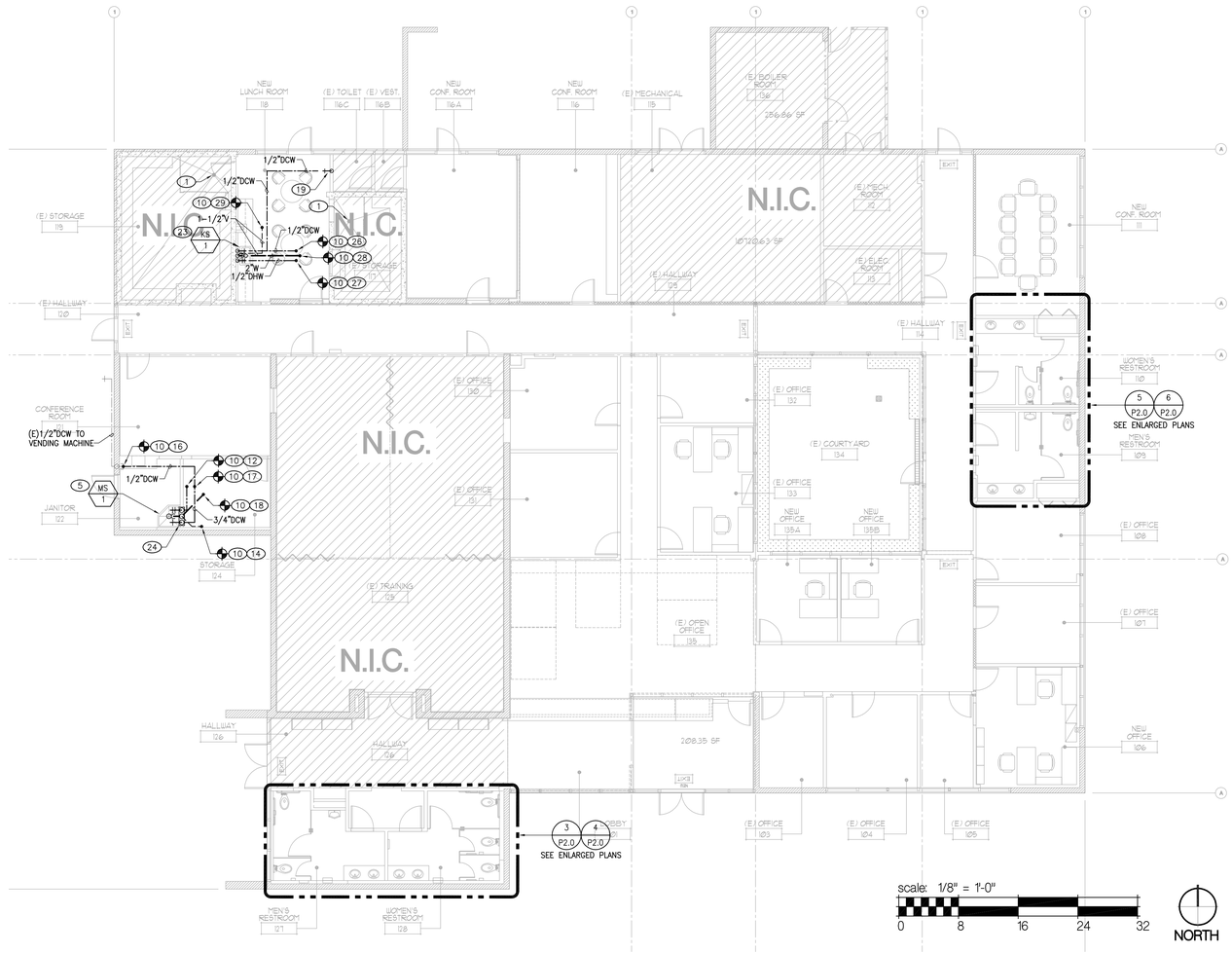

reconstruction plan — 1
SCALE: 1/8"=1'-0"

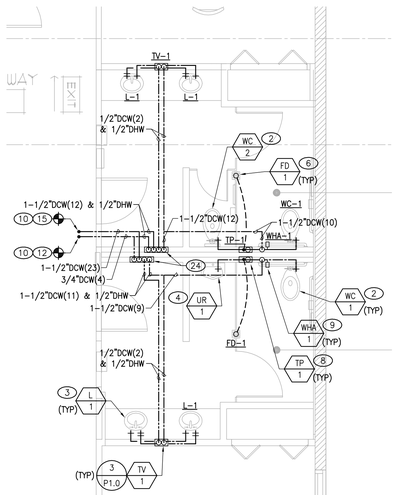

enlarged water supply plan — 6
SCALE: 1/4"=1'-0"

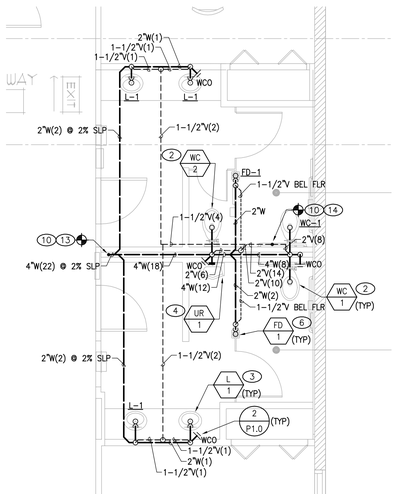

enlarged waste & vent plan — 5
SCALE: 1/4"=1'-0"

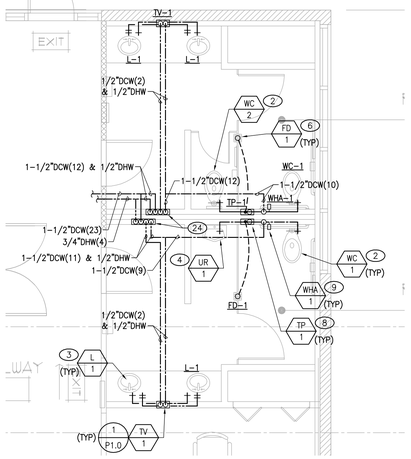

partial alternative enlarged water supply plan — 8
SCALE: 1/4"=1'-0"

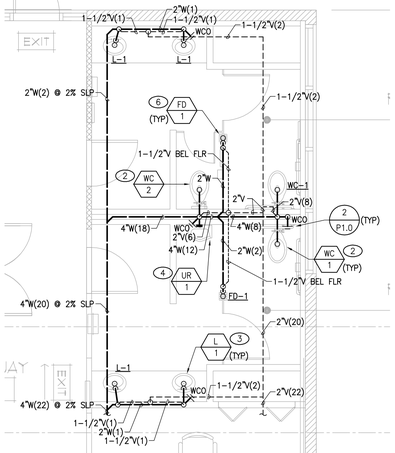

partial alternative enlarged waste & vent plan — 7
SCALE: 1/4"=1'-0"

KEYED NOTES

1. EXISTING PLUMBING FIXTURE TO REMAIN.
2. 1-1/2"DCW, 2"V AND 4"W TO WC-1 & WC-2.
3. 1/2"DCW & 1/2"DHW, 1-1/2"V AND 2"W TO L-1. TEMPERATURE CONTROL FOR PUBLIC LAVATORIES SHALL LIMIT THE OUTLET TEMPERATURE TO 110°F MAX PER CEC.
4. 1"DCW, 1-1/2"V AND 2"W TO UR-1.
5. 3/4"DCW & 3/4"DHW, 2"V AND 3"W TO MS-1.
6. 1/2"DCW, 1-1/2"V AND 2"W TO FD-1. PROVIDE ACCESS PANEL FOR T.P.
7. 1/2"DCW TO DF-1.
8. 1/2"DCW TO TP-1 W/ ACCESS PANEL. TRAP PRIMER VALVE WITH INTEGRAL BACKFLOW PREVENTER AND VACUUM BREAKER PORT.
9. DO NOT PROVIDE AIR CHAMBERS. PROVIDE WATER HAMMER ARRESTERS BY SIOUX CHIEF, PRECISION PLUMBING PRODUCTS, WATTS OR APPROVED EQUIVALENT WITH PISTON AND O-RING CONSTRUCTION, HAVING PDI #WH-201, ASSE #1010 AND ANSI #A112.26.1M CERTIFICATION. INSTALL IN HORIZONTAL OR VERTICAL POSITION, BUT NEVER UPSIDE DOWN. INSTALL IN LINE WITH WATER FLOW IF POSSIBLE. PROVIDE ACCESSIBILITY TO "WHA" WHERE REQUIRED BY LOCAL CODE. INSTALL PER MANUFACTURER'S RECOMMENDATION.
10. CONTRACTOR SHALL ASSUME RESPONSIBILITY FOR LOCATION OF WASTE, WATER, VENT & POINTS OF CONNECTION WITHIN A FIFTEEN (15) FOOT RADIUS FROM THOSE SHOWN ON PLANS. THE PLUMBING CONTRACTOR SHALL VERIFY THE EXACT LOCATION, SIZE AND ELEVATION OF ALL EXISTING LINES, WYES, ETC., BEFORE STARTING ANY WORK, AND SHALL NOTIFY THE GENERAL CONTRACTOR, ARCHITECT & ENGINEER IF SAID LOCATIONS ARE NOT IN THE LOCATIONS SHOWN ON THE PLANS OR ARE NOT OF SUFFICIENT SIZE OR DEPTH TO MAKE CONNECTION IN COMPLIANCE WITH THE PLANS. ALL CHANGES SHALL BE MADE WITHOUT ADDITIONAL COST TO OWNER.
11. 2"DCW POC TO EXISTING. CONTRACTOR SHALL VERIFY EXACT POINT OF CONNECTION.
12. 3/4"DHW POC TO EXISTING. CONTRACTOR SHALL VERIFY EXACT POINT OF CONNECTION.
13. 4"W POC TO EXISTING. CONTRACTOR SHALL VERIFY EXACT POINT OF CONNECTION.
14. 2"V POC TO EXISTING. CONTRACTOR SHALL VERIFY EXACT POINT OF CONNECTION.
15. 1-1/2"DCW POC TO EXISTING. CONTRACTOR SHALL VERIFY EXACT POINT OF CONNECTION.
16. 1/2"DCW POC TO EXISTING. CONTRACTOR SHALL VERIFY EXACT POINT OF CONNECTION.
17. 3/4"DCW POC TO EXISTING. CONTRACTOR SHALL VERIFY EXACT POINT OF CONNECTION.
18. 3"W POC TO EXISTING. CONTRACTOR SHALL VERIFY EXACT POINT OF CONNECTION.
19. 1/2"DCW TO REFRIGERATOR.
20. (not used)
21. (not used)
22. 2-1/2"V POC TO EXISTING. CONTRACTOR SHALL VERIFY EXACT POINT OF CONNECTION.
23. 1/2"DCW & 1/2"DHW, 1-1/2"V AND 2"W TO KS-1.
24. PROVIDE SHUT-OFF VALVES IN WALL WITH ACCESS PANEL.
25. PROVIDE SEPARATE BID AMOUNT FOR ALTERNATE LAYOUT.
26. 1/2"DCW POC TO EXISTING. CONTRACTOR SHALL VERIFY EXACT POINT OF CONNECTION.
27. 1/2"DHW POC TO EXISTING. CONTRACTOR SHALL VERIFY EXACT POINT OF CONNECTION.
28. 2"W POC TO EXISTING. CONTRACTOR SHALL VERIFY EXACT POINT OF CONNECTION.
29. 1-1/2"V POC TO EXISTING. CONTRACTOR SHALL VERIFY EXACT POINT OF CONNECTION.
30. PROVIDE TRAP PRIMER TO ALL FLOOR DRAINS.
31. PROVIDE WALL CLEANOUT ABOVE TOILET.

MONTROSS & ASSOCIATES, INC.
CONSULTING SERVICES
3198-D2 AIRPORT LOOP DR.
COSTA MESA, CA 92626
(949) 553-9005 fax (949) 553-9007

REGISTERED PROFESSIONAL ENGINEER — DAVID E. MONTROSS — M 029332 — EXP. 06/30/14 — MECHANICAL — STATE OF CALIFORNIA

job no.	A9041109-P
drawn	
submittal	
Plan Check Submittal	03.27.2012
Plan Check Re-Submittal	10.29.2012
Issue For Bid	10.29.2012
revision	
1 Client Revisions	10.23.2012

all ideas, designs and plans represented by this drawing are the exclusive property of the withee malcolm partnership, architects, and shall not be reproduced in whole or in part without the express prior written permission of said architects, any unauthorized reuse of these plans other than for the project and location shown is prohibited.

Tenant Improvements / Accessibility Upgrades for :

CITY OF TORRANCE

PERSONNEL BUILDING

3231 Torrance Boulevard, Torrance, CA 90503

OWNER : City of Torrance, Department of General Services
3350 Civic Center Drive, Torrance, CA 90503

WITHEE MALCOLM ARCHITECTS, LLP
2251 W. 190th Street
Torrance, Ca 90504
t. 310.217.8885
f. 310.217.0425

reconstruction plan

sheet title

P-2.0

sheet

BID SET ONLY