Fire Station # 1

Bristolite® Skylights

401 E. Goetz Ave., P.O. Box 2515
Santa Ana, CA 92707
714.540.8950 • 800/854.8618•Fax 714.540.5415

A = Inside Curb Opening
B = Outside Curb
C= Inside Skylight Frame

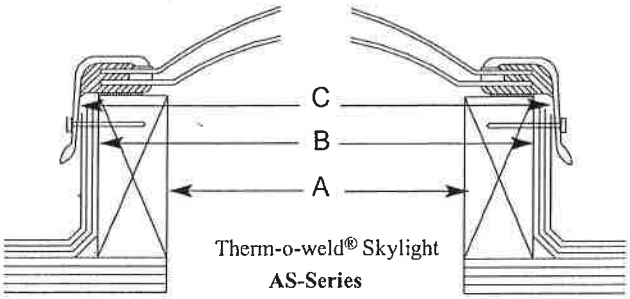

Therm-o-weld® Skylight
AS-Series

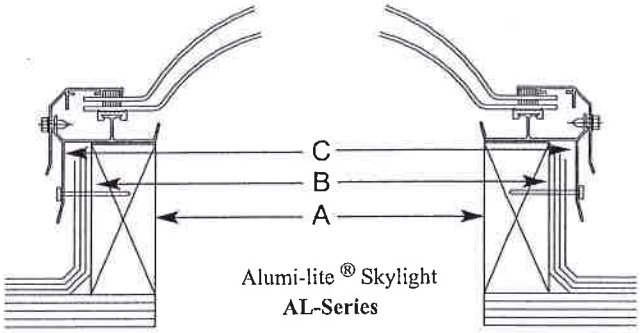

Alumi-lite ® Skylight
AL-Series

Standard Sizes | Wood Curb Mounting | Framing Dimensions*

(14) PCS

(1) PC

	Model Size	A Curb Opening	B Outside Curb	C Inside Skylight Frame	Approx. Alumi-Lite Outside Skylight Frame +/- 1/4"
Square	1414	14¼" x 14¼"	17¼" x 17¼"	18½" x 18½"	19¼ x 19¼
	1919	19 " x 19"	22" x 22"	23¼" x 23¼"	24 x 24
	2222	22¼" x 22¼"	25¼" x 25¼"	26½" x 26½"	27¼ x 27¼
	3030	30¼" x 30¼"	33¼" x 33¼"	34½" x 34½"	35¼ x 35¼
	3737	37" x 37"	40" x 40"	41¼" x 41¼"	42 x 42
	4242	42" x 42"	45" x 45"	46¼" x 46¼"	47 x 47
	4646	46¼" x 46¼"	49¼" x 49¼"	50½" x 50½"	51¼ x 51¼
	4848	48" x 48"	51" x 51"	52¼" x 52¼"	53 x 53
	5555	55" x 55"	58" x 58"	59¼" x 59¼"	60 x 60
	7070	70¼" x 70¼"	73¼" x 73¼"	74½" x 74½"	75¼ x 75¼
¼	7575	75" x 75"	78" x 78"	79¼" x 79¼"	80 x 80
	8484	84 " x 84"	87" x 87"	88¼" x 88¼"	89 x 89
	9292	92½" x 92½"	95½" x 95½"	96¾" x 96¾"	97½ x 97½
Rectangle	1422	14¼" x 22¼"	17¼" x 25¼"	18½" x 26½"	19¼ x 27¼
	1446	14¼" x 46¼"	17¼" x 49¼"	18½" x 50½"	19¼ x 51¼
	2230	22¼" x 30¼"	25¼" x 33¼"	26½" x 34½"	27¼ x 35¼
	2237	22¼" x 37"	25¼" x 40"	26½" x 41¼"	27¼ x 42
	2246	22¼" x 46¼"	25¼" x 49¼"	26½" x 50½"	27¼ x 51¼
	2272	22¼" x 72"	25¼" x 75"	26½" x 76¼"	27¼ x 77
	2296	22¼" x 96"	25¼" x 99"	26½" x 100¼"	27¼ x 101
	3037	30¼" x 37"	33¼" x 40"	34½" x 41¼"	35¼ x 42
	3046	30¼" x 46¼"	33¼" x 49¼"	34½" x 50½"	35¼ x 51¼
	3069	30¼" x 69½"	33¼" x 72½"	34½" x 73¾"	35¼ x 74½
	3096	30¼" x 96"	33¼" x 99"	34½" x 100¼"	35¼ x 101
	3496	34" x 96"	37" x 99"	38¼" x 100¼"	39 x 101
	36120	36" x 120"	39" x 123"	40¼" x 124¼"	41 x 125
	3746	37" x 46¼"	40" x 49¼"	41¼" x 50½"	42 x 51¼
	3775	37" x 75"	40" x 78"	41¼" x 79¼"	42 x 80
	3859	38" x 59"	41" x 62"	42¼" x 63¼"	43 x 64
	4669	46¼" x 69½"	49¼" x 72½"	50½" x 73¾"	51¼ x 74½
	4689	46¼" x 89½"	49¼" x 92½"	50½" x 93¾"	51¼ x 94½
	4896	48" x 96"	51" x 99"	52¼" x 100¼"	53 x 101
	48120	48" x 120"	51" x 123"	52¼" x 124¼"	53 x 125
	5460	54" x 60"	57" x 63"	58¼" x 64¼"	59 x 65
	6096	60" x 96"	63" x 99"	64¼" x 100¼"	65 x 101

Dimensions on Custom Sizes Upon Request

Note**: Dimensions in columns **C** may vary slightly due to manufacturering process.(**"AS" Series only)

ALUMILITE ACRYLIC CURB MOUNTED SKYVENT

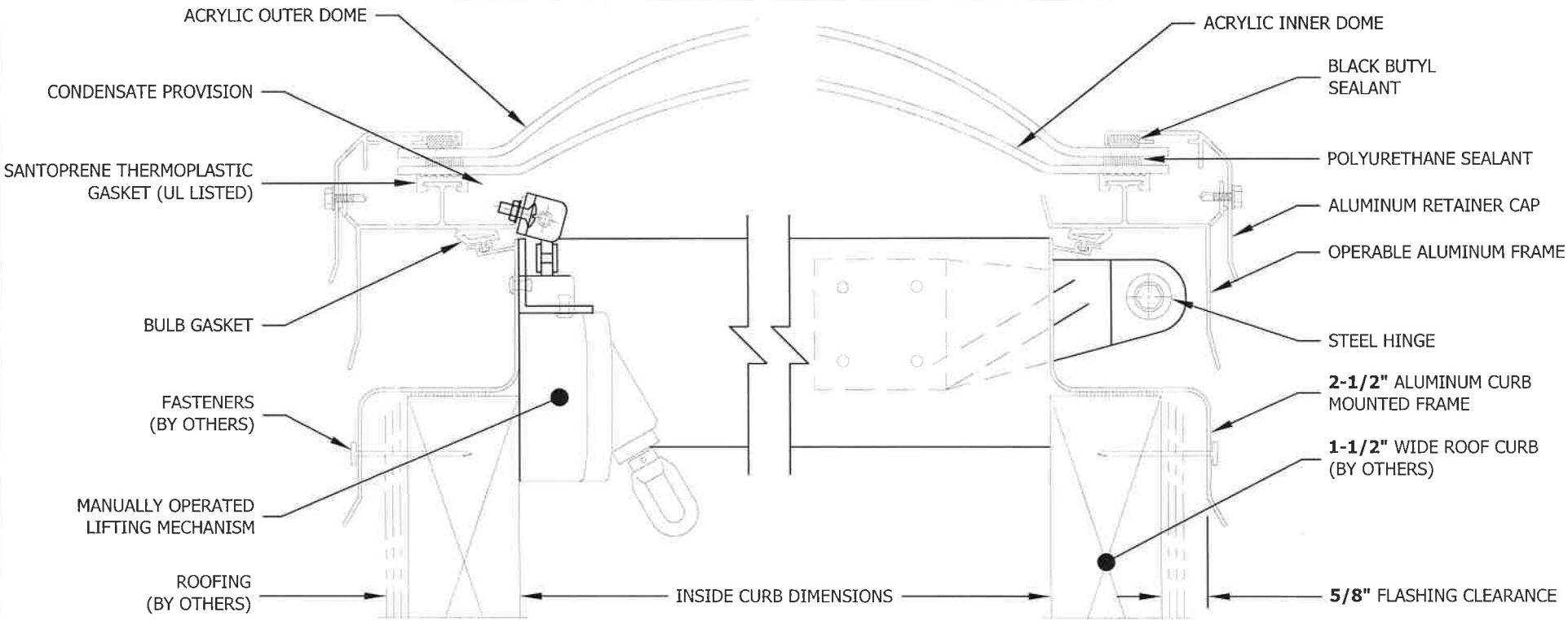

MODEL: AL-SD-CM-2
(NOT TO SCALE)

Outside Dimension
27" x 27"

OUTER ACRYLIC COLOR
- ○ BRONZE (BT)
- ○ CLEAR (CC)
- ○ GREY (GT)
- ☒ WHITE (WTM)
- ○ OTHER:

INNER ACRYLIC COLOR
- ○ BRONZE (BT)
- ☒ CLEAR (CC)
- ○ GREY (GT)
- ○ WHITE (WTM)
- ○ OTHER:

FRAME FINISH
- ○ BRONZE ANODIZED (BA)
- ○ CLEAR ANODIZED (CA)
- ☒ MILL FINISH (MF)
- ○ WHITE PAINT (WP)
- ○ OTHER:

SPECIFICATIONS
VLT: SHGC:
U FACTOR:

MODEL NUMBER	INSIDE CURB DIMENSIONS	QTY
SQUARE		
1414-AL-SD	14 1/4" x 14 1/4"	
1919-AL-SD	19" x 19"	
2222-AL-SD	22 1/4" x 22 1/4"	X
3030-AL-SD	30 1/4" x 30 1/4"	
3737-AL-SD	37" x 37"	
4242-AL-SD	42" x 42"	
4646-AL-SD	46 1/4" x 46 1/4"	
4848-AL-SD	48" x 48"	
CALL FOR ADDITIONAL SIZES		

MODEL NUMBER	INSIDE CURB DIMENSIONS	QTY
RECTANGLE		
1422-AL-SD	14 1/4" x 22 1/4"	
1446-AL-SD	14 1/4" x 46 1/4"	
2230-AL-SD	22 1/4" x 30 1/4"	
2237-AL-SD	22 1/4" x 37"	
2246-AL-SD	22 1/4" x 46 1/4"	
2272-AL-SD	22 1/4" x 72"	
2296-AL-SD	22 1/4" x 96"	
2448-AL-SD	24 1/4" x 48 1/4"	
2496-AL-SD	24 1/4" x 96"	
3037-AL-SD	30 1/4" x 37"	
3046-AL-SD	30 1/4" x 46 1/4"	
3069-AL-SD	30 1/4" x 69 1/2"	
3096-AL-SD	30 1/4" x 96"	
3496-AL-SD	34" x 96"	
CALL FOR ADDITIONAL SIZES		

MODEL NUMBER	INSIDE CURB DIMENSIONS	QTY
RECTANGLE - (cont.)		
3696-AL-SD	36" x 96"	
3746-AL-SD	37" x 46 1/4"	
3775-AL-SD	37" x 75"	
3859-AL-SD	38" x 59"	
4669-AL-SD	46 1/4" x 69 1/2"	
REVERSE HINGED		
2214-AL-SD	22 1/4" x 14 1/4"	
3022-AL-SD	30 1/4" x 22 1/4"	
3722-AL-SD	37" x 22 1/4"	
3730-AL-SD	37" x 30 1/4"	
4614-AL-SD	46 1/4" x 14 1/4"	
4622-AL-SD	46 1/4" x 22 1/4"	
4630-AL-SD	46 1/4" x 30 1/4"	
4637-AL-SD	46 1/4" x 37"	
CALL FOR ADDITIONAL SIZES		

Bristolite® Daylighting Systems
401 East Goetz Avenue, Santa Ana, CA. 92707
TEL 714.540.8950 / FAX 714.540.5415

CUSTOMER:

PROJECT: Fire Station #1

PREPARED BY:

JOB No.:

SUBMITTAL DATE:

SHEET NO.:

DWG. LOCATION: X:\ASHARED\ENGR\DEPT\ACAD DRAWINGS\Submitt\Bristol\Resident\AL-SD\Angle Drive - Current\AL-SD-CM-2.DWG

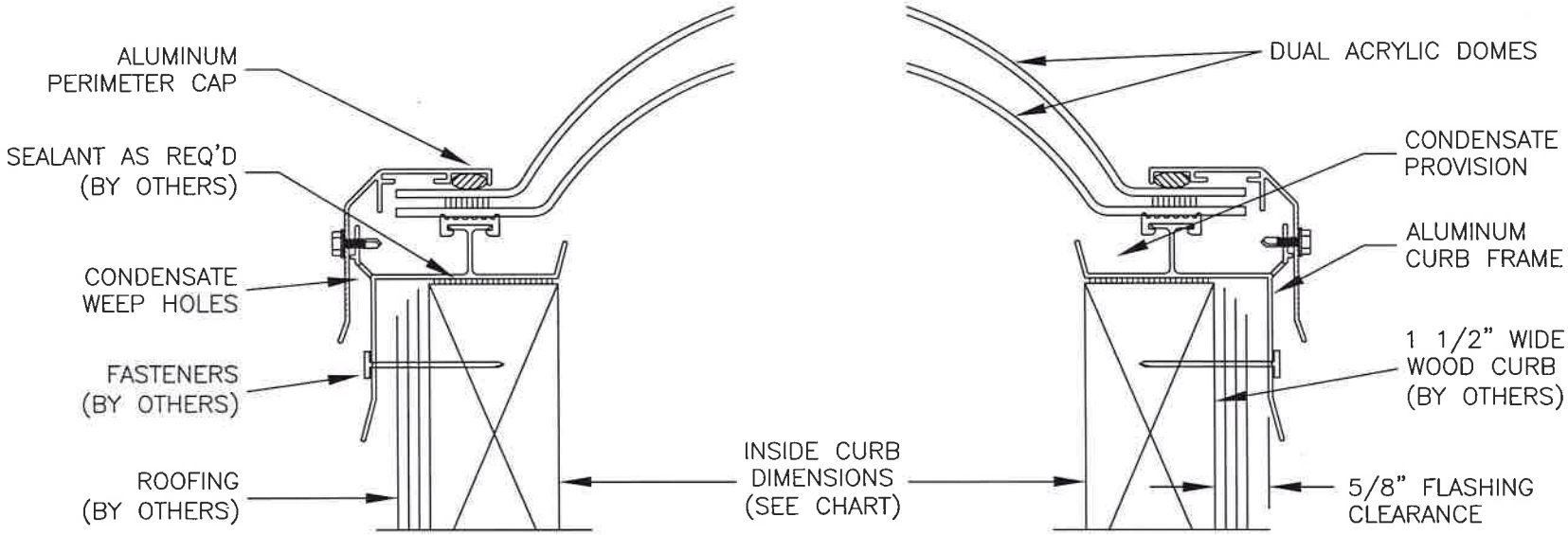

ALUMILITE CURB MOUNT SKYLIGHT

MODEL: AL-CM-2

Outside Dimension 51 1/4" x 51 1/4"

NOT TO SCALE

ACRYLIC GLAZING

TRANSLUCENT WHITE:
- CLEAR (CC) ○
- BRONZE (BT) ○
- GREY (GT) ○
- OTHER: _____ ○

MEDIUM (WTM) ⊗

FRAME FINISH

- MILL FINISH (MF) ⊗
- BRONZE ANODIZED (BA) ○
- WHITE PAINT (WP) ○
- OTHER: _____ ○

MODEL NUMBER	INSIDE CURB DIMENSIONS	QTY
SQUARE		
1414 AL-CM	14 1/4" x 14 1/4"	
1919 AL-CM	19" x 19"	
2222 AL-CM	22 1/4" x 22 1/4"	
3030 AL-CM	30 1/4" x 30 1/4"	
3737 AL-CM	37" x 37"	
4242 AL-CM	42" x 42"	
4646 AL-CM	46 1/4" x 46 1/4"	X
4848 AL-CM	48" x 48"	
5555 AL-CM	55" x 55"	

MODEL NUMBER	INSIDE CURB DIMENSIONS	QTY
RECTANGULAR		
1422 AL-CM	14 1/4" x 22 1/4"	
1446 AL-CM	14 1/4" x 46 1/4"	
2230 AL-CM	22 1/4" x 30 1/4"	
2237 AL-CM	22 1/4" x 37"	
2246 AL-CM	22 1/4" x 46 1/4"	
2272 AL-CM	22 1/4" x 72"	
2296 AL-CM	22 1/4" x 96"	
3037 AL-CM	30 1/4" x 37"	
3046 AL-CM	30 1/4" x 46 1/4"	
3069 AL-CM	30 1/4" x 69 1/2"	

MODEL NUMBER	INSIDE CURB DIMENSIONS	QTY
RECTANGULAR – CONTINUED		
3746 AL-CM	37" x 46 1/4"	
3775 AL-CM	37" x 75"	
3859 AL-CM	38" x 59"	
4669 AL-CM	46 1/4" x 69 1/2"	
4689 AL-CM	46 1/4" x 89 1/2"	
4896 AL-CM	48" x 96"	
5460 AL-CM	54" x 60"	
6072 AL-CM	60" x 72"	

Bristolite® Daylighting Systems

401 East Goetz Avenue, Santa Ana, CA. 92707
TEL 714.540.8950 / FAX 714.540.5415

CUSTOMER :	PREPARED BY :	JOB NO :
PROJECT : Fire Station #1	SUBMITTAL DATE :	SHEET NO.:

DWG. LOCATION: X:\ASHARED\ENGR\DEPT\ACAD DRAWINGS\Submitt\Bristol\Resident\AL\AL-CM-2 / July 6, 2011