PROPOSAL, SPECIFICATIONS, BOND AND AFFIDAVIT FOR THE CONSTRUCTION OF

Del Amo Boulevard Extension, T-30 – Phase 1
Reroute of Two Water & Two Sewer Pipelines
B2009-37

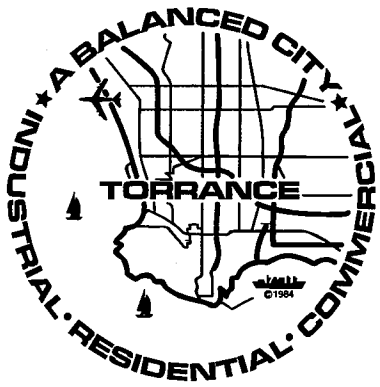

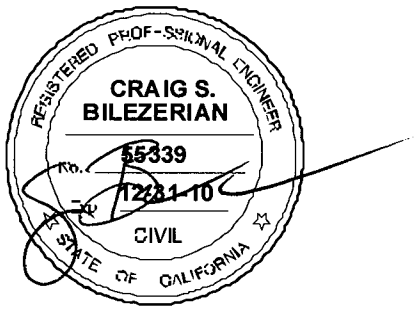

CRAIG S. BILEZERIAN
Engineering Manager

September 2009

TABLE OF CONTENTS

SECTION A - NOTICE INVITING BIDS

NOTICE INVITING BIDS A-1

SECTION B

INSTRUCTIONS TO BIDDERS B-1

SECTION C - BID DOCUMENTS

BIDDER'S PROPOSAL C-1

ACKNOWLEDGMENT OF ADDENDA RECEIVED C-5

CONTRACTOR'S AFFIDAVIT C-6

BID BOND C-8

LIST OF SUBCONTRACTORS C-9

REFERENCES C-10

VIOLATIONS OF FEDERAL, STATE OR LOCAL LAWS C-12

DISQUALIFICATION OR DEBARMENT C-13

SECTION D - DOCUMENTS TO BE COMPLETED AND DELIVERED TO CITY PRIOR TO AWARD OF CONTRACT

PERFORMANCE BOND D-1

LABOR AND MATERIAL BOND D-3

PUBLIC WORKS AGREEMENT D-6

CONSTRUCTION OR SERVICE CONTRACT ENDORSEMENT D-16

WORKERS' COMPENSATION INSURANCE CERTIFICATION D-18

SECTION E - SPECIAL PROVISIONS

APPENDICES

APPENDIX I - CITY OF TORRANCE BUSINESS LICENSE

APPENDIX II - CITY OF TORRANCE STANDARD PLANS

APPENDIX III - SPPWC STANDARD PLANS

APPENDIX IV- STORM WATER GENERAL PERMIT & NOTICE OF INTENT/TERMINATION

APPENDIX V- CALIFORNIA DIVISION OF OCCUPATIONAL SAFETY & HEALTH, ACTIVITY FORM FOR BUILDINGS/STRUCTURES, SCAFFOLDING/ FALSEWORK, DEMOLITION, TRENCHES/EXCAVATIONS

APPENDIX VI - (*OMITTED)*

APPENDIX VII - *(OMITTED)*

APPENDIX VIII - COUNTY SANITATION DISTRICTS OF LOS ANGELES COUNTY AMENDMENTS TO THE STANDARD SPECIFICATIONS FOR PUBLIC WORKS CONSTRUCTION

APPENDIX IX - COUNTY SANITATION DISTRICTS OF LOS ANGELES COUNTY STANDARD PLANS

APPENDIX X - BURLINGTON NORTHERN AND SANTA FE RAILWAY
- *LICENSE AGREEMENT FOR 24" CITY WATER*
- *LICENSE AGREEMENT FOR 10" CITY SEWER*

APPENDIX XI - BURLINGTON NORTHERN AND SANTA FE RAILWAY & LA COUNTY METROPOLITAN TRANSPORTATION AUTHORITY
- *OVERPASS AGREEMENT*

APPENDIX XII - CALIFORNIA WATER SERVICE COMPANY
- *WATER PIPELINE RELOCATION AGREEMENT*

APPENDIX XIII - COUNTY SANITATION DISTRICTS OF LOS ANGELES COUNTY
- *SEWER RELOCATION AGREEMENT*
- *AMENDMENT TO SEWER RELOCATION AGREEMENT*
- *APRIL 29, 2009 LETTER*

APPENDIX XIV - DOW CHEMICAL COMPANY
- *PURCHASE & SALE AGREEMENT*

APPENDIX XV- EXXONMOBIL OIL CORPORATION
- *1999 AGREEMENT*

APPENDIX XVI- EXXONMOBIL OIL CORPORATION
- *AMENDMENT NO. 1 TO THE 1999 AGREEMENT*

APPENDIX XVII- EXXONMOBIL OIL CORPORATION
- *RIGHT OF ENTRY AGREEMENT*

APPENDIX XVIII - MCImetro ACCESS TRANSMISSION SERVICES LLC
- *REIMBURSEMENT AGREEMENT*

APPENDIX XIX - TMT SOUTH BAY BUSINESS PARK
- *AGREEMENT FOR CONVEYANCE OF PROPERTY*

APPENDIX XX - CALIFORNIA DIVISION OF OCCUPATIONAL SAFETY & HEALTH, MINING & TUNNELING UNIT UNDERGROUND CLASSIFICATION

APPENDIX XXI- SOIL MANAGEMENT PLAN

SECTION A

NOTICE INVITING BIDS

CITY OF TORRANCE, CALIFORNIA

NOTICE INVITING BIDS

Notice is hereby given that sealed bids for performing the following described work will be received at the Office of the City Clerk of the City of Torrance, California, **until 2:00 p.m. on Thursday, October 8, 2009,** after which time they will be publicly opened and read at 2:15 p.m. in the Council Chambers of said City:

CONSTRUCTION OF
DEL AMO BOULEVARD EXTENSION, T-30 – Phase 1
REROUTE OF TWO WATER & TWO SEWER PIPELINES
B2009-37

Plans, Bid Schedule and Specifications are available for viewing and printing by prospective bidders and subcontractors on the City's website at http://www.torranceca.gov/9980.htm

An official and required form of Proposal may be obtained at the Office of the City Clerk (310) 618-2870, City Hall, 3031 Torrance Boulevard, Torrance, California, at no cost if picked up at City Hall, or payment of $5 if requested by mail. The amount includes tax and is not refundable. A prospective bidder must provide the firm's name, address, telephone and fax numbers, a contact person and a valid email address. Addenda will be issued only by email and only to those that provide the required information to the City Clerk. Receipt of any Addendum must be acknowledged by a bidder in its submitted form of Proposal.

Full-size 24" x 36" Plans and a bound Specifications booklet may also be obtained at the Office of the City Clerk (310) 618-2870, City Hall, 3031 Torrance Boulevard, Torrance, California upon payment of $115 if picked up at City Hall, or payment of $125 if requested by mail. Both amounts include tax. Neither amount is refundable.

If requesting any item(s) by mail, please send check to the following:

CITY OF TORRANCE
OFFICE OF THE CITY CLERK
3031 TORRANCE BLVD
TORRANCE, CA 90509
ATTN: B2009-37

The Engineer's estimate of the contract total is between $1,800,000 and $1,900,000. All work shall be completed within 180 working days from the date of the Notice to Proceed (NTP).

Per Division 2, Chapter 2 of the Torrance Municipal Code, the Torrance City Council may reject any and all bids, waive any informality or irregularity in such bids, and determine the lowest responsible bidder. No facsimile bids shall be accepted by the City.

Substitution of securities for withheld funds is permitted per Section 22300 of the Public Contract Code.

The City has determined that either a Class **A** or **C34** Contractor's license is necessary to bid this project, but reserves the right to accept another Class at the sole discretion of either the Public Works Director or Engineer.

By order of the City Council of the City of Torrance, California.

For further information, contact either Craig Bilezerian, Engineering Manager at (310) 618-3054 or Beth Overstreet, Engineering Manager at (310) 618-3074 in the Public Works Department.

SECTION B

INSTRUCTIONS TO BIDDERS

CITY OF TORRANCE, CALIFORNIA

INSTRUCTIONS TO BIDDERS

A. QUALIFICATION OF BIDDERS

1. Competency of Bidders

The Bidder shall be thoroughly competent and capable of satisfactorily performing the Work covered by the Bid. As specified in the Bid Documents, the Bidder shall furnish statements of previous experience on similar work. When requested, the Bidder shall also furnish the plan of procedure proposed; the organization, machinery, plant and other equipment available for the Work; evidence of its financial condition and resources; and any other such documentation as may be required by the City to determine if the Bidder is responsible.

2. Contractor's License

At the time of submitting the Bid, the Bidder shall be licensed as a contractor in accordance with the provisions of Chapter 9, Division 3, of the California Business and Professions Code. The required prime contractor license class for the Work is shown in the project Notice Inviting Bids. However, the City reserves the right to award the Contract to a contractor with another class if the City determines that the license is proper for the work.

B. BIDDER RESPONSIBILITY

A responsible Bidder is a Bidder who has demonstrated the attribute of trustworthiness, as well as ability, fitness, capacity and experience to satisfactorily perform the work.

Bidders are notified that, in accordance with Division 2, Chapter 2 of the Torrance Municipal Code, the City Council may determine whether the Bidder is responsible based on a review of the Bidder's performance on other contracts.

If, based on the provision and criteria in Division 2, Chapter 2 of the Torrance Municipal Code, the Engineering Director proposes not to recommend the award of contract to the apparent low bidder, the Director shall notify the Bidder in writing of its intention to recommend to the City Council that the Council award the contract to the 2nd lowest responsible bidder. If the Bidder presents evidence in rebuttal to the recommendation, the Director shall evaluate the merits of such evidence, and based on that evaluation, make a recommendation to the City Council.

C. ADDENDA TO THE CONTRACT DOCUMENTS

The City may issue Addenda to the Contract Documents during the period of advertising for any reason. The Bidder shall acknowledge the receipt of the Addenda in their Bid. Failure of the Bidder to do so may result in the rejection of the Bid as non-responsive.

D. PREPARATION OF THE BID

1. Examination of Site, Plans and Specifications

Prior to submitting a Bid, the Bidder shall examine the Plans and the Work site, carefully read the Specifications, and satisfy itself that it has the abilities and resources to complete the Work. The Bidder agrees that if it is awarded the Contract, no claim will be made against the City based on ignorance or misunderstanding of the provisions of the Contract Documents, the nature and amount of the work, and the physical and climatic conditions of the work site.

2. Estimated Quantities

The quantities shown in the Bid are approximate only. The Contractor will be paid for the actual quantities of work based on field measurements as provided for in these Specifications. The City reserves the right to increase or decrease the amount of any item or portion of work to be performed or materials furnished, or to delete any item, in accordance with the Specifications.

3. Bid Instructions and Submissions

The Bid shall be submitted on the Bid Proposal forms included with the Specifications. All Bid Documents must be completed, executed and submitted with the Bid by the Bidder.

Required eight (8) Submittal Documents:

1) Bidder's Proposal
2) Acknowledgment Of Addenda Received
3) Contractor's Affidavit
4) Bid Bond (10%)
5) List of Subcontractors
6) References (2 pages)
7) Violations of Federal or State Law
8) Disqualification or Debarment

All prices submitted will be considered as including any and all sales or use taxes. In the case of discrepancy between unit bid price and total bid, the unit price shall prevail.

E. BID BOND

The Bid must be accompanied by either cash, a certified or cashier's check or a surety bond (bid bond) payable to the City of Torrance. Bids must be submitted on the proposal forms furnished by the Public Works Department. The Bid Guaranty shall be in an amount equivalent to at least 10% of the Total Contract Bid Price.

F. NONRESPONSIVE BIDS AND BID REJECTION

1. A Bid in which any one (1) of the required eight (8) Bid proposal documents are not completed, executed and submitted may be considered non-responsive and be rejected.

2. A Bid in which the Contract Unit Prices are unbalanced, which is incomplete or which shows alteration of form or irregularities of any kind, or which contains any additions or conditional or alternate Bids that are not called for, may be considered non-responsive and be rejected.

G. AWARD OF CONTRACT

In accordance with Division 2, Chapter 2 of the Torrance Municipal Code, the City Council reserves the right to reject any and all bids received, to take all bids under advisement for a period not-to-exceed sixty (60) days after date of opening thereof, to waive any informality or irregularity in the Bid, and to be the sole judge of the merits of material included in the respective bids received.

H. EXECUTION OF CONTRACT

After the Contract is awarded, the awarded shall execute the following nine (9) documents:

1) Bond (100% of Bid)
2) Labor and Material Bond (100% of Bid)
3) Contract - Public Works Agreement
4) Verification of Insurance Coverage (Certificates and Endorsements)
5) Construction or Service Contract Endorsement
6) Workers' Compensation Insurance Certificate
7) Construction Permit Application Form
8) Business License Application Form
9) Agreement Between LOS ANGELES COUNTY METROPOLITAN TRANSPORTATION AUTHORITY and the CONTRACTOR per Appendix XI, Exhibit “I-1”

I. APPRENTICESHIP EMPLOYMENT STANDARDS

The Contractor is directed to the provisions in Sections 1776, 1777.5 and 1777.6 of the California Labor Code concerning the employment of apprentices by the contractor or any subcontractor under them.

J. PERMITS, LICENSES AND PUBLIC WORKS AGREEMENT

The Contractor shall procure and execute all permits, licenses, pay all charges and fees, and give all notices necessary and incidental to the completion of the Work. The Contractor shall execute a Public Works Agreement. The Contractor shall obtain a City of Torrance Business License.

K. INSURANCE

The Contractor shall maintain Insurance as specified in:

- the Public Works Agreement included in Section D of these Specifications; and
- the BNSF Railway Company License Agreement, Section 21, as included in Appendix X; and
- the California Water Service Company Water Pipeline Relocation Agreement, Section V.8., as include in Appendix XII; and
- the County Sanitation Districts of Los Angeles County Sewer Relocation Agreement, Section 7, and Amendments to the Standard Specifications for Public Works Construction, Section 7-3, as shown in Appendices XIII and VIII, respectively; and
- the ExxonMobil Oil Corporation Right of Entry Agreement, Section 4, as included in Appendix XVII; and
- the BNSF Railway Company and Los Angeles County Metropolitan Transportation Authority Overpass Agreement, Exhibit "I-1," as included in Appendix XI.

L. PRE-BID INQUIRIES

A Bidder with a Pre-Bid Inquiry must submit its question(s) in writing to the Torrance Public Works Department. Any and all questions must be emailed to both Mr. Craig Bilezerian, Engineering Manager at cbilezerian@torranceCA.gov and to Ms. Beth Overstreet, Engineering Manager at eoverstreet@torranceCA.gov. Please list "**Del Amo Blvd – Phase 1 RFI – (*question topic*)**" in the subject line of the email.

All questions must be received no later than 5:00 p.m. on the Monday prior to the date for opening the bids. Questions received after this date may not be considered. For questions of a general nature, a bidder may call Mr. Craig Bilezerian directly at (310) 618-3054 or Ms. Beth Overstreet directly at (310) 618-3074.

SECTION C

BID DOCUMENTS

BIDDER'S PROPOSAL

Company: _____

Total Bid: _____(LIST NUMBERS)

PROPOSAL, SPECIFICATIONS, BOND AND AFFIDAVIT
FOR THE CONSTRUCTION OF
Del Amo Boulevard Extension, T-30 – Phase 1
Reroute of Two Water and Two Sewer Pipelines
B2009-37

Honorable Mayor and Members
of the Torrance City Council
Torrance, California

Members of the Council:

In accordance with the Notice Inviting Bids pertaining to the receiving of sealed proposals by the City Clerk of the City of Torrance for the above titled improvement, the undersigned hereby proposes to furnish all Work to be performed in accordance with the Plans, Specifications, Standard Drawings, and the Contract Documents, for the unit price or lump sum set forth in the following schedule.

BID SCHEDULE

ITEM NO.	ITEM DESCRIPTION	SPEC	QTY.	UNIT OF MEASURE	UNIT PRICE	TOTAL BID
	SECTION 1 - GENERAL REQUIREMENTS					
1	MOBILIZATION (5% MAX)	9-3.4.1	1	LS	$	$
2	CONSTRUCTION SCHEDULE	6-1.5	9	EA	$	$
3	NPDES COMPLIANCE	7-7.6.1	1	LS	$	$
4	STORMWATER POLLUTION PREVENTION	7-8.6.3	1	LS	$	$
5	HEALTH & SAFETY PLAN	7-10.4.5	1	LS	$	$
6	SURVEY/POTHOLING	2-9.3	1	LS	$	$
7	SOIL CONTAMINATION	3-4.1	1	ALW	$ 25,000.00	$ 25,000.00
8	REMOVALS/CLEARING & GRUBBING	300-1.4	1	LS	$	$
9	FURNISH & PLANT 24" BOX CREPE MYRTLE TREE (on TMT PROPERTY)	212-1, 308-4	1	EA	$	$

ITEM NO.	ITEM DESCRIPTION	SPEC	QTY.	UNIT OF MEASURE	UNIT PRICE	TOTAL BID
	SECTION 5a - UTILITIES - Water					
10	24" Water Pipeline (CITY)	306-1.2, 306-1.6.3	1,435	LF	$	$
11	18" Water Pipeline (CAL WATER)	306-1.2, 306-1.6.3, per plan	1,522	LF	$	$
12	36" Steel Casing (FOR 24" CITY LINE)	306-2	165	LF	$	$
13	30" Steel Casing (18" CAL WTR.) (LOC. 1)	306-2, per plan	157	LF	$	$
14	30" Steel Casing (18" CAL WTR.) (LOC 2)	306-2, per plan	85	LF	$	$
15	ABANDON WATERLINES (SLURRY FILL) (CITY)	306-5.1	1345	LF	$	$
16	ABANDON WATERLINES (SLURRY FILL) (CAL WATER)	306-5.1, per plan	1405	LF	$	$
17	*(OMITTED)*	–	–	–	$ –	$ –
18	24" BUTTERFLY VALVES (CITY)	215-1.3, 313-2	8	EA	$	$
19	18" BUTTERFLY VALVES (CAL WATER)	313-2, per plan	4	EA	$	$
20	AIR & VACUUM RELEASE VALVES (CITY)	313-3	1	EA	$	$
21	ABANDON AIR & VACUUM RELEASE VALVES (CITY)	306-5.3, 306-5.5	3	EA	$	$
22	ABANDON VALVES (CITY)	306-5.2, 306-5.5	3	EA	$	$
23	ABANDON VALVES (CAL WATER)	306-5.2, per plan	2	EA	$	$

ITEM NO.	ITEM DESCRIPTION	SPEC	QTY.	UNIT OF MEASURE	UNIT PRICE	TOTAL BID
	SECTION 5b - UTILITIES – Fire					
24	Valves at location of Proposed Elevated Hydrant (Structure) (City)	215-2, 313-4	3	EA	$	$
25	Hydrants (Roadway) (City)	215-2, 313-4	4	EA	$	$
26	6" Fire Line (City)	215-6.3	110	LF	$	$
27	Abandon Fire Hydrants (CalWater)	306-5.3, per plan	2	EA	$	$
28	Relocate Fire Hydrant(City)	5-4	2	EA	$	$
	SECTION 5d - UTILITIES - Sewer					
29	24" Sewer Pipeline (LACSD)	LACSD 5-4, 306-1 306-1.6	620	LF	$	$
30	12" Sewer Pipeline (City)	5-4, 306-1 306-1.6	88	LF	$	$
31	10" Sewer Pipeline (City)	5-4, 306-1 306-1.6	142	LF	$	$
32	4" Sewer Pipeline (City)	5-4, 306-1 306-1.6	38	LF	$	$
33	24" Steel Casing (for 10" City Sewer)	306-2	121	LF	$	$
34	Abandon 24" Sewer Pipeline (LACSD)	LACSD 306-5	630	LF	$	$
35	Abandon 12" Sewer Pipeline (City) (Including 2 Sack Cement Slurry)	306-5	106	LF	$	$
36	Abandon 10" Sewer Pipeline (City) (Including 2 Sack Cement Slurry)	306-5	65	LF	$	$
37	Abandon Manhole (LACSD)	LACSD 306-5	3	EA	$	$
38	Sewer Manhole (5') (LACSD)	LACSD 302-5.8	3	EA	$	$
39	Sewer Manhole (7') (LACSD)	LACSD 302-5.8	1	EA	$	$
40	Sewer Manhole (8') (LACSD)	LACSD 302-5.8	1	EA	$	$
41	Sewer Manhole (5') (City)	306-1.2.17	2	EA	$	$
42	PERMITS and FEES	7-5.3	1	ALW	$ 5,000.00	$ 5,000.00

BIDDER'S PROPOSAL (Continued) B2009-37

TOTAL BID PRICE $_____
(Figures)*

TOTAL BID PRICE: _____
(Words)*

_____

<u>*BID MAY BE REJECTED IF TOTAL IS NOT SHOWN IN FIGURES AND WORDS.</u>

The undersigned furthermore agrees to enter into and execute a contract, with necessary bonds, at the unit prices set forth herein and in case of default in executing such contract, with necessary bonds, the check or bond accompanying this bid and the money payable thereon shall be forfeited thereby to and remain the property of the City of Torrance.

The above unit prices include all work appurtenant to the various items as outlined in the Specifications and all work or expense required for the satisfactory completion of said items. In case of discrepancies between unit prices and totals, the unit prices shall govern.

The undersigned declares that it has carefully examined the Plans, Specifications, and Contract Documents, and has investigated the site of the work and is familiar with the conditions thereon.

Contractor:_____

Date: _____ By: _____

Contractor's State License No. _____ Class_____

Address:_____

Phone: _____

Fax: _____

ACKNOWLEDGMENT OF ADDENDA RECEIVED – B2009-37

The Bidder shall acknowledge the receipt of addenda by placing an "X" by each addendum received.

Addendum No. 1 ____

Addendum No. 2 ____

Addendum No. 3 ____

Addendum No. 4 ____

Addendum No. 5 ____

Addendum No. 6 ____

Addendum No. 7 ____

If an addendum or addenda have been issued by the City and not noted above as being received by the Bidder, the Bid Proposal may be rejected.

_____ _____

Bidder's Signature Date

CONTRACTOR'S AFFIDAVIT - B2009-37

STATE OF CALIFORNIA }
}
COUNTY OF _____}

_____, being first duly sworn, deposes and says:

1. That he is the

_____
Title

of _____
(Name of Partnership, Corporation, or Sole Proprietorship)

hereinafter called "Contractor," who has submitted to the City of Torrance a proposal for the Construction of Del Amo Boulevard Extension, T-30 – Phase 1; REROUTE OF TWO WATER & TWO SEWER PIPELINES, B2009-37;

2. That said proposal is genuine; that the same is not sham; that all statement of facts therein are true;

3. That such proposal was not made in the interest or behalf of any person, partnership, company, association, organization or corporation not named or disclosed;

4. That the Contractor did not, directly or indirectly, induce, solicit or agree with anyone else to submit a false or sham bid, to refrain from bidding, or to withdraw the bid, to raise or fix the bid price of the Contractor or anyone else, or to raise or fix any overhead, profit or cost element of the Contractor's price or the price of anyone else; and did not attempt to induce action prejudicial to the interest of the City of Torrance, or of any other bidder, or anyone else interested in the proposed contract;

5. That the Contractor has not in any manner sought by collusion to secure for itself an advantage over any other bidder or to induce action prejudicial to the interests of the City of Torrance, or of any other bidder or of anyone else interested in the proposed contract;

6. That the Contractor has not accepted any bid from any subcontractor or materialman through any bid depository, the bylaws, rules or regulations of which prohibit or prevent the Contractor from considering any bid from any subcontractor or materialman, which is not processed through said bid depository, or which prevent any subcontractor or materialman from bidding to any contractor who does not use the facilities of or accept bids from or through such bid depository;

CONTRACTOR'S AFFIDAVIT (CONTINUED)

7. That the Contractor did not, directly or indirectly, submit the Contractor's bid price or any breakdown thereof, or the contents thereof, or divulge information or data relative thereto, to any corporation, partnership, company, association, organization, bid depository, or to any member or agent thereof, or to any individual or group of Individuals, except to the City of Torrance, or to any person or persons who have a partnership or other financial interest with said Contractor in its business.

Dated this _____ day of _____, 20___.

Subscribed and Sworn to
before me this _____ day
of _____, 20___.

_____
(Contractor)

_____
(Title)

_____
Notary Public in and for said
County and State.
(Seal)

BID BOND (10%)

B2009-37

KNOW ALL MEN BY THESE PRESENTS: That we, _____

_____

as principal, and _____

as sureties, are held and firmly bound unto the City of Torrance, State of California, in the penal sum of _____ dollars ($_____), for the payment whereof we hereby bind ourselves, our successors, heirs, executors or administrators jointly and severally, firmly by these presents.

The condition of this obligation is such that, whereas the above bounded principal is about to file with and submit to the City of Torrance a bid or proposal for the performance of certain work as required in the City of Torrance, Project No. B2009-37 said work being: the Construction of Del Amo Boulevard Extension, T-30 – Phase 1, REROUTE OF TWO WATER & TWO SEWER PIPELINES and in compliance with the Specifications therefore under an invitation of said City contained in a notice or advertisement for bids or proposals; now if the bid or proposal of the said principal shall be accepted and if the said work be thereupon awarded to the principal by said City and if the said principal shall enter into a contract with the said City in accordance with said bid or proposal, or if the bid or proposal of the said principal is rejected, then this bond shall be void and of no effect and otherwise in full force and effect.

WITNESS our hands this _____ day of _____, 20___.

_____
Principal

_____
Surety/Attorney-in-Fact

_____
Signature

Name: _____
Local Address: _____
_____
Phone No.: _____
Fax No.: _____

LIST OF SUBCONTRACTORS
B2009-37

The Bidder is required to fill in the following blanks in accordance with the provisions of the Subletting and Subcontracting Fair Practices Act (Chapter 2 of Division 5, Title 1 of the Government Code of the State of California). The contractor, sub recipient or subcontractor shall not discriminate on the basis of race, color, national origin, or sex in the performance of this contract. The contractor shall carry out applicable requirements of Title 49 CFR (Code of Federal Regulations) part 26 in the award and administration of US DOT assisted contracts. Failure by the contractor to carry out these requirements is a material breach of this contract, which may result in the termination of this contract or such other remedy, as the recipient deems appropriate. Each subcontract signed by the bidder must include this assurance.

Failure of the bidder to fulfill the requirements of the Special Provisions for submittals required to be furnished after bid opening, including but not limited to escrowed bid documents, where applicable, may subject the bidder to a determination of the bidder's responsibility in the event it is the apparent low bidder on a future public works contracts.

Name Under Which Subcontractor is Licensed:_____

Subcontractor's Address: _____

Specific Description of Sub-Contract:_____

License Number: _____ CA License Classification/Type: _____

Name Under Which Subcontractor is Licensed:_____

Subcontractor's Address: _____

Specific Description of Sub-Contract:_____

License Number: _____ CA License Classification/Type: _____

Name Under Which Subcontractor is Licensed:_____

Subcontractor's Address: _____

Specific Description of Sub-Contract:_____

License Number: _____ CA License Classification/Type: _____

Subcontractors listed must be properly licensed under the laws of the State of California for the type of work which they are to perform. Do not list alternate subcontractors for the same work.

REFERENCES (PAGE 1 OF 2)
B2009-37

(Work similar in magnitude and degree of difficulty completed by Contractor within the past three [3] years.)

1. Name (Firm/Agency): _____
   Address: _____
   Contact Person: _____ Telephone No.: _____
   Title of Project: _____
   Project Location: _____
   Date of Completion: _____ Contract Amount: $ _____

2. Name (Firm/Agency): _____
   Address: _____
   Contact Person: _____ Telephone No.: _____
   Title of Project: _____
   Project Location: _____
   Date of Completion: _____ Contract Amount: $ _____

3. Name (Firm/Agency): _____
   Address: _____
   Contact Person: _____ Telephone No.: _____
   Title of Project: _____
   Project Location: _____
   Date of Completion: _____ Contract Amount: $ _____

4. Name (Firm/Agency): _____
   Address: _____
   Contact Person: _____ Telephone No.: _____
   Title of Project: _____
   Project Location: _____
   Date of Completion: _____ Contract Amount: $ _____

If Contractor has not performed work for the City of Torrance within the last five (5) years, list all work done within said five years (attach additional sheets if necessary). Note if work was done as subcontractor [include only subcontract amount]:

Work Description & Contract Amount	Agency	Date Completed

Contractor's License No.: _____ Class: _____

a. Date first obtained: _____ Expiration _____

b. Has License ever been suspended or revoked? _____

If yes, describe when and why: _____

c. Any current claims against License or Bond? _____

If yes, describe claims: _____

Principals in Company (List all – attach additional sheets if necessary):

NAME	TITLE	LICENSE NO. (If Applicable)

VIOLATIONS OF FEDERAL, STATE OR LOCAL LAWS

1. Has your firm or its officers been assessed any penalties by an agency for noncompliance or violations of Federal, State or Local labor laws and/or business or licensing regulations within the past five (5) years relating to your construction projects?

   Yes/No: _____ Federal/State:_____

   If "yes," identify and describe, (including agency and status): _____

   _____

   _____

   _____

   Have the penalties been paid? Yes/No: _____

2. Does your firm or its officers have any ongoing investigations by any public agency regarding violations of the State Labor Code, California Business and Professions Code or State Licensing Laws?

   Yes/No: _____ Code/Laws: _____ Section/Article: _____

   If "yes," identify and describe, (including agency and status): _____

   _____

   _____

   _____

DISQUALIFICATION OR DEBARMENT

Has your firm, any officer of your firm, or any employee who has a proprietary interest in your firm ever been disqualified, removed, or otherwise prevented from bidding on, performing work on, or completing a federal, state or local project because of a violation of law or a safety regulation? Yes/No: _____. If yes, provide the following information (if more than once, use separate sheets):

Date: _____ Entity: _____

Location: _____

Reason: _____

_____

_____

_____

_____

Provide Status and any Supplemental Statement: _____

_____

_____

_____

_____

Has your firm been reinstated by this entity? Yes/No: _____

SECTION D

DOCUMENTS TO BE COMPLETED AND DELIVERED TO CITY PRIOR TO AWARD OF CONTRACT

PERFORMANCE BOND
B2009-37

KNOW ALL MEN BY THESE PRESENTS:

That we, _____as Principal(s) and _____a corporation, incorporated, organized, and existing under the laws of the State of _____, and authorized to execute bonds and undertakings and to do a general surety business in the State of California, as Surety, are jointly and severally held and firmly bound unto the City of Torrance, a municipal corporation, located in the County of Los Angeles, State of California, in the full and just sum of: _____ Dollars ($_____), lawful money of the United States of America, for the payment of which sum, well and truly to be made, we bind ourselves and our respective heirs, executors, administrators, representative, successors and assigns, jointly and severally, firmly by these presents.

THE CONDITION OF THIS OBLIGATION IS SUCH, that: **WHEREAS,** said Principal(s) have/has entered into, or are/is about to enter into, a certain written contract or agreement, dated as of the _____ day of _____, 20____, with the said City of Torrance for the Construction of **Del Amo Boulevard Extension, T-30 – Phase 1; Reroute of Two Water and Two Sewer Pipelines, B2009-37**,, all as is more specifically set forth in said contract or agreement, a full, true and correct copy of which is hereunto attached, and hereby referred to and by this reference incorporated herein and made a part hereof;

NOW, THEREFORE, if the said Principal(s) shall faithfully and well and truly do, perform and complete, or cause to be done, performed and complete, each and all of the covenants, terms, conditions, requirements, obligations, acts and things, to be met, done or performed by said Principal(s), including any guarantee period as set forth in, or required by, said contract or agreement, all at and within the time or times, and in the manner as therein specified and contemplated, then this bond and obligation shall be null and void; otherwise it shall be and remain in full force, virtue and effect.

The said Surety, for value received, hereby stipulates and agrees that no amendment, change, extension of time, alteration or addition to said contract or agreement, or of any feature or item or items of performance required therein or thereunder, shall in any manner affect its obligations on or under this bond; and said Surety does hereby waive notice of any such amendment, change, extension of time, alteration, or addition to said contract or agreement, and of any feature or item or items of performance required therein or thereunder.

PERFORMANCE BOND (CONTINUED) - B2009-37

In the event any suit, action or proceedings is instituted to recover on this bond or obligation, said Surety will pay, and does hereby agree to pay, as attorney's fees for said City, such sum as the Court in any such suit, action or proceeding may adjudge reasonable.

EXECUTED, SEALED AND DATED this _____ day of _____, 20____.

CORPORATE SEAL PRINCIPAL(S):

BY _____

BY _____

CORPORATE SEAL SURETY:

BY _____

LABOR AND MATERIAL BOND
B2009-37

KNOW ALL MEN BY THESE PRESENTS:

That we, _____
As Principal(s) and
_____ a corporation,
incorporated, organized, and existing under the laws of the State of _____,
and authorized to execute bonds and undertakings and to do a general surety business in the State of California, as Surety, are jointly and severally held and firmly bound unto:

(a) The State of California for the use and benefit of the State Treasurer, as ex-officio Treasurer and custodian of the Unemployment Fund of said State; and

(b) The City of Torrance, California; and

(c) Any and all persons who do or perform or who did or performed work or labor upon or in connection with the work or improvement referred to in the contract or agreement hereinafter mentioned; and

(d) Any and all materialmen, persons, companies, firms, association, or corporations, supplying or furnishing any materials, provisions, provender, transportation, appliances or power, or other supplies used in, upon, for or about or in connection with the performance of the work or improvement contracted to be executed, done, made or performed under said contract or agreement; and

(e) Any and all persons, companies, firms, associations, or corporations furnishing, renting, or hiring teams, equipment, implements or machinery for, in connection with, or contributing to, said work to be done or improvement to be made under said contract or agreement; and

(f) Any and all persons, companies, firms, associations, or corporations who supply both work and materials;

and whose claim has not been paid by said Principal(s), in full and just sum of _____ Dollars ($_____), lawful money of the United States of America, for the payment of which will and truly to be made, said Principal(s) and said Surety do hereby bind themselves and their respective heirs, executors, administrators, representatives, successors and assigns, jointly and severally, firmly by these presents.

LABOR AND MATERIAL BOND (CONTINUED)

THE CONDITION OF THE FOREGOING OBLIGATION IS SUCH, THAT: WHEREAS, said Principal(s) have/has entered into or are/is about to enter into a certain written contract or agreement, dated as of the _____ day of _____20 ___, with the City of Torrance for the Construction of **Del Amo Boulevard Extension, T-30 – Phase 1, Reroute of Two Water and Two Sewer Pipelines, B2009-37**, all as is more specifically set forth in said contract or agreement, a full, true and correct copy of which is hereunto attached, and hereby referred to and by this reference incorporated herein and made a part hereof;

NOW, THEREFORE, if the said Principal(s) (or any of his/her, its, or their subcontractors) under said contract or agreement fails or fail to pay:

(1) For any materials, provisions, provender, transportation, appliances, or power, or other supplies; or

(2) For the hire of any teams, equipment, implements, or machinery; or

(3) For any work or labor; supplies, furnished, provided, used, done or performed in, upon, for or about or in connection with the said work or improvement; or

(4) For amounts due under the Unemployment Insurance Act of the State of California with respect to such work or improvement;

the Surety on this bond will pay the same in an amount not exceeding the sum hereinabove specified in this bond; and, also, in case suit is brought upon this bond, said Surety will (and does hereby agree to) pay a reasonable attorney's fee, to be fixed and taxed as costs, and included in the judgment therein rendered.

This bond shall (and it is hereby made to) insure to the benefit of any and all persons entitled to file claims under Section 1192.1 of the Code of Civil Procedure of the State of California, so as to give a right of action to them or their assigns in any suit brought upon this bond, all as contemplated under the provisions of Section 4205 of the Government Code, and of Chapter 1 of Title 4 of Part 3 of the Code of Civil Procedure, of the State of California.

This bond is executed and filed in connection with said contract or agreement hereunto attached to comply with each and all of the provisions of the laws of the State of California above mentioned or referred to, and of all amendments thereto, and the obligors so intend and do hereby bind themselves accordingly.

LABOR AND MATERIAL BOND (CONTINUED)

The said Surety, for value received, hereby stipulates and agrees that no amendment, change, extension of time, alteration, or addition to said contract or agreement, or of any feature or item or items of performance required therein or thereunder, shall in any manner affect its obligations on or under this bond; and said Surety does hereby waive notice of any such amendment, change, extension of time, alteration, or addition to said contract or agreement, and of any feature or item or items of performance required therein or thereunder.

EXECUTED, SEALED AND DATED this _____ day of _____, 2009

CORPORATE SEAL

PRINCIPAL:

BY_____

CORPORATE SEAL

SURETY:

BY_____

PUBLIC WORKS AGREEMENT

This PUBLIC WORKS AGREEMENT ("Agreement") is made and entered into as of _____, 20___ (the "Effective Date"), by and between the CITY OF TORRANCE, a municipal corporation ("CITY"), and _____ ("CONTRACTOR").

RECITALS:

A. The CITY wishes to retain the services of an experienced and qualified CONTRACTOR to construct the Del Amo Boulevard Extension, T-30 – Phase 1, Reroute of Two Water and Two Sewer Pipelines B2009-37;

B. In order to obtain the desired services, The CITY has circulated a Notice Inviting Bids for the construction of the **Del Amo Boulevard Extension, T-30 – Phase 1, Reroute of Two Water and Two Sewer Pipelines, Notice Inviting Bids No. B2009-37** (the "NIB"); and

C. CONTRACTOR has submitted a Bid (the "Bid") in response to the NIB. CONTRACTOR represents that it is qualified to perform those services requested in the Plans and Specifications. Based upon its review of all Bids submitted in response to the NIB, The CITY is willing to award the contract to CONTRACTOR.

AGREEMENT:

1. <u>SERVICES TO BE PERFORMED BY CONTRACTOR</u>

CONTRACTOR will provide the services and install those materials listed in the Plans and Specifications, which are on file in the Engineering Department. The NIB and the Plans and Specifications are made a part of this Agreement. A copy of the Bid is attached as Exhibit A.

2. <u>TERM</u>

Unless earlier terminated in accordance with Paragraph 4 below, this Agreement will continue in full force and effect for two years from the Effective Date.

3. <u>COMPENSATION</u>

A. CONTRACTOR's Fee.

For services rendered pursuant to this Agreement, CONTRACTOR will be paid in accordance with CONTRACTOR's Bid; provided, however, that in no event will the total amount of money paid the CONTRACTOR, for services initially contemplated by this Agreement, exceed the sum of $_____ ("Agreement Sum"), unless otherwise first approved in writing by the CITY.

B. Schedule of Payment.

Provided that the CONTRACTOR is not in default under the terms of this Agreement, upon presentation of an invoice, CONTRACTOR will be paid monthly, within 30 days after the date of the monthly invoice.

4. TERMINATION OF AGREEMENT

A. Termination by CITY for Convenience.

1. CITY may, at any time, terminate the Agreement for CITY's convenience and without cause.

2. Upon receipt of written notice from CITY of such termination for CITY's convenience, CONTRACTOR will:

   a) cease operations as directed by CITY in the notice;
   b) take actions necessary, or that CITY may direct, for the protection preservation of the work; and
   c) except for work directed to be performed prior to the effective date of termination stated in the notice, terminate all existing subcontracts and purchase orders and enter into no further subcontracts and purchase orders.

3. In case of such termination for CITY's convenience, CONTRACTOR will be entitled to receive payment for work executed; and costs incurred by reason of such termination, along with reasonable overhead and profit on the work not executed.

B. Termination for Cause.

1. If either party fails to perform any term, covenant or condition in this Agreement and that failure continues for 15 calendar days after the nondefaulting party gives the defaulting party notice of the failure to perform, this Agreement may be terminated for cause; provided, however, that if during the notice period the defaulting party has promptly commenced and continues diligent efforts to remedy the default, the defaulting party will have such additional time as is reasonably necessary to remedy the default.

2. In the event this Agreement is terminated for cause by the default of the CONTRACTOR, the CITY may, at the expense of the CONTRACTOR and its surety, complete this Agreement or cause it to be completed. Any check or bond delivered to the CITY in connection with this Agreement, and the money payable thereon, will be forfeited to and remain the property of the CITY. All moneys due the CONTRACTOR under the terms of this Agreement will be retained by the CITY, but the retention will not release the CONTRACTOR and its surety from liability for the default. Under these circumstances, however, the CONTRACTOR and its surety will be credited with the amount of money retained, toward any amount by which the cost of completion exceeds the Agreement Sum and any amount authorized for extra services.

3. Termination for cause will not affect or terminate any of the rights of the CITY as against the CONTRACTOR or its surety then existing, or which may thereafter accrue because of the default; this provision is in addition to all other rights and remedies available to the CITY under law.

C. Termination for Breach of Law.

In the event the CONTRACTOR or any of its officers, directors, shareholders, employees, agents, subsidiaries or affiliates is convicted (i) of a criminal offense as an

incident to obtaining or attempting to obtain a public or private contract or subcontract, or in the performance of a contract or subcontract; (ii) under state or federal statutes of embezzlement, theft, forgery, bribery, falsification or destruction of records, receiving stolen property, or any other offense indicating a lack of business integrity or business honesty which currently, seriously, and directly affects responsibility as a public consultant or contractor; (iii) under state or federal antitrust statutes arising out of the submission of bids or proposals; or (iv) of violation of Paragraph 19 of this Agreement; or for any other cause the CITY determines to be so serious and compelling as to affect CONTRACTOR's responsibility as a public consultant or contractor, including but not limited to, debarment by another governmental agency, then the CITY reserves the unilateral right to terminate this Agreement or to impose such other sanctions (which may include financial sanctions, temporary suspensions or any other condition deemed appropriate short of termination) as it deems proper. The CITY will not take action until CONTRACTOR has been given notice and an opportunity to present evidence in mitigation.

5. FORCE MAJEURE

If any party fails to perform its obligations because of strikes, lockouts, labor disputes, embargoes, acts of God, inability to obtain labor or materials or reasonable substitutes for labor or materials, governmental restrictions, governmental regulations, governmental controls, judicial orders, enemy or hostile governmental action, civil commotion, fire or other casualty, or other causes beyond the reasonable control of the party obligated to perform, then that party's performance shall be excused for a period equal to the period of such cause for failure to perform.

6. RETENTION OF FUNDS

CONTRACTOR authorizes the CITY to deduct from any amount payable to CONTRACTOR (whether or not arising out of this Agreement) any amounts the payment of which may be in dispute or that are necessary to compensate the CITY for any losses, costs, liabilities, or damages suffered by the CITY, and all amounts for which the CITY may be liable to third parties, by reason of CONTRACTOR's negligent acts or omissions or willful misconduct in performing or failing to perform CONTRACTOR's obligations under this Agreement. In the event that any claim is made by a third party, the amount or validity of which is disputed by CONTRACTOR, or any indebtedness exists that appears to be the basis for a claim of lien, the CITY may withhold from any payment due, without liability for interest because of the withholding, an amount sufficient to cover the claim. The failure of the CITY to exercise the right to deduct or to withhold will not, however, affect the obligations of CONTRACTOR to insure, indemnify, and protect the CITY as elsewhere provided in this Agreement.

7. THE CITY'S REPRESENTATIVE

The Public Works Director is designated as the "City Representative," authorized to act in its behalf with respect to the work and services specified in this Agreement and to make all decisions in connection with this Agreement. Whenever approval, directions, or other actions are required by the CITY under this Agreement, those actions will be taken by the City Representative, unless otherwise stated. The City Manager has the right to designate another City Representative at any time, by providing notice to CONTRACTOR.

8. CONTRACTOR REPRESENTATIVE(S)

The following principal(s) of CONTRACTOR are designated as being the principal(s) and representative(s) of CONTRACTOR authorized to act in its behalf with respect to the work specified in this Agreement and make all decisions in connection with this Agreement:

_____

_____

_____

9. INDEPENDENT CONTRACTOR

The CONTRACTOR is, and at all times will remain as to the CITY, a wholly independent contractor. Neither the CITY nor any of its agents will have control over the conduct of the CONTRACTOR or any of the CONTRACTOR's employees, except as otherwise set forth in this Agreement. The CONTRACTOR may not, at any time or in any manner, represent that it or any of its agents or employees are in any manner agents or employees of the CITY.

10. BUSINESS LICENSE

The CONTRACTOR must obtain a City business license prior to the start of work under this Agreement, unless CONTRACTOR is qualified for an exemption.

11. OTHER LICENSES AND PERMITS

CONTRACTOR warrants that it has all professional, contracting and other permits and licenses required to undertake the work contemplated by this Agreement.

12. FAMILIARITY WITH WORK

By executing this Agreement, CONTRACTOR warrants that CONTRACTOR (a) has thoroughly investigated and considered the scope of services to be performed, (b) has carefully considered how the services should be performed, and (c) fully understands the facilities, difficulties and restrictions attending performance of the services under this Agreement. If the services involve work upon any site, CONTRACTOR warrants that CONTRACTOR has or will investigate the site and is or will be fully acquainted with the conditions there existing, prior to commencement of services set forth in this Agreement. Should CONTRACTOR discover any latent or unknown conditions that will materially affect the performance of the services set forth in this Agreement, CONTRACTOR must immediately inform the CITY of that fact and may not
proceed except at CONTRACTOR's risk until written instructions are received from the CITY.

13. CARE OF WORK

CONTRACTOR must adopt reasonable methods during the life of the Agreement to furnish continuous protection to the work, and the equipment, materials, papers, documents, plans, studies and other components to prevent losses or damages, and will be responsible for all damages, to persons or property, until acceptance of the work by the CITY, except those losses or damages as may be caused by the CITY's own negligence.

14. CONTRACTOR'S ACCOUNTING RECORDS; OTHER PROJECT RECORDS

Records of the CONTRACTOR's time pertaining to the project, and records of accounts between the CITY and the CONTRACTOR, will be kept on a generally recognized accounting basis. CONTRACTOR will also maintain all other records, including without limitation specifications, drawings, progress reports and the like, relating to the project. All records will be available to the CITY during normal working hours. CONTRACTOR will maintain these records for three years after final payment.

15. INDEMNIFICATION

CONTRACTOR will indemnify, defend, and hold harmless CITY, the City Council, each member thereof, present and future, its officers, agents and employees from and against any and all liability, expenses, including defense costs and legal fees, and claims for damages whatsoever, including, but not limited to, those arising from breach of contract, bodily injury, death, personal injury, property damage, loss of use, or property loss however the same may be caused and regardless of the responsibility for negligence. The obligation to indemnify, defend and hold harmless includes, but is not limited to, any liability or expense, including defense costs and legal fees, arising from the negligent acts or omissions, or willful misconduct of CONTRACTOR, its officers, employees, agents, subcontractors or vendors. It is further agreed, CONTRACTOR's obligations to indemnify, defend and hold harmless will apply even in the event of concurrent negligence on the part of CITY, the City Council, each member thereof, present and future, or its officers, agents and employees, except for liability resulting solely from the negligence or willful misconduct of CITY, its officers, employees or agents. Payment by CITY is not a condition precedent to enforcement of this indemnity. In the event of any dispute between CONTRACTOR and CITY, as to whether liability arises from the sole negligence of the CITY or its officers, employees, agents, subcontractors or vendors, CONTRACTOR will be obligated to pay for CITY's defense until such time as a final judgment has been entered adjudicating the CITY as solely negligent. CONTRACTOR will not be entitled in the event of such a determination to any reimbursement of defense costs including but not limited to attorney's fees, expert fees and costs of litigation.

16. NON-LIABILITY OF THE CITY'S OFFICERS AND EMPLOYEES

No officer or employee of the CITY will be personally liable to CONTRACTOR, in the event of any default or breach by the CITY or for any amount that may become due to CONTRACTOR.

17. INSURANCE

A. CONTRACTOR must maintain at its sole expense the following insurance, which will be full coverage not subject to self insurance provisions:

1. Automobile Liability, including owned, non-owned and hired vehicles, with at least the following limits of liability:

   a. Combined single limits of $2,000,000 per occurrence.

2. General Liability including coverage for premises, products and completed operations, independent contractors, personal injury and contractual obligations with combined single limits of coverage of at least $3,000,000 per occurrence, with an annual aggregate of no less than $5,000,000.

3. Workers' Compensation with limits as required by the State of California and Employers Liability with limits of at least $1,000,000.

B. The insurance provided by CONTRACTOR will be primary and non-contributory.

C. The CITY of Torrance, the City Council and each member thereof, members of boards and commissions, every officer, agent, official, employee and volunteer must be named as additional insureds under the automobile and general liability policies.

D. CONTRACTOR must provide certificates of insurance and/or endorsements to the City Clerk of the City of Torrance before the commencement of work.

E. Each insurance policy required by this Paragraph must contain a provision that no termination, cancellation or change of coverage can be made without thirty days notice to the CITY.

F. CONTRACTOR must include all subcontractors as insureds under its policies or must furnish separate certificates and endorsements for each subcontractor. All coverage for subcontractors will be subject to all of the requirements of this Paragraph 17.

18. SUFFICIENCY OF INSURERS

Insurance required by this Agreement will be satisfactory only if issued by companies admitted to do business in California, rated "B+" or better in the most recent edition of Best's Key Rating Guide, and only if they are of a financial category Class VII or better, unless these requirements are waived by the Risk Manager of the CITY ("Risk Manager") due to unique circumstances. In the event the Risk Manager determines that the work or services to be performed under this Agreement creates an increased or decreased risk of loss to the CITY, the CONTRACTOR agrees that the minimum limits of any insurance policies and/or the performance bond required by this Agreement may be changed accordingly upon receipt of written notice from the Risk Manager; provided that CONTRACTOR will have the right to appeal a determination of increased coverage by the Risk Manager to the City Council of the CITY within 10 days of receipt of notice from the Risk Manager.

19. CONFLICT OF INTEREST

A. No officer or employee of the CITY may have any financial interest, direct or indirect, in this Agreement, nor may any officer or employee participate in any decision relating to the Agreement that effects the officer or employee's financial interest or the financial interest of any corporation, partnership or association in which the officer or employee is, directly or indirectly interested, in violation of any law, rule or regulation.

B. No person may offer, give, or agree to give any officer or employee or former officer or employee, nor may any officer or employee solicit, demand, accept, or agree to accept from another person, a gratuity or an offer of employment in connection with any decision, approval, disapproval, recommendation, preparation or any part of a program requirement or a purchase request, influencing the

content of any specification or procurement standard, rendering of advice, investigation, auditing, or in any other advisory capacity in any way pertaining to any program requirement, contract or subcontract, or to any solicitation or proposal.

20. NOTICE

A. All notices, requests, demands, or other communications under this Agreement will be in writing. Notice will be sufficiently given for all purposes as follows:

1. Personal delivery. When personally delivered to the recipient: notice is effective on delivery.

2. First Class mail. When mailed first class to the last address of the recipient known to the party giving notice: notice is effective three mail delivery days after deposit in an United States Postal Service office or mailbox.

3. Certified mail. When mailed certified mail, return receipt requested: notice is effective on receipt, if delivery is confirmed by a return receipt.

4. Overnight delivery. When delivered by an overnight delivery service, charges prepaid or charged to the sender's account: notice is effective on delivery, if delivery is confirmed by the delivery service.

5. Facsimile transmission. When sent by fax to the last fax number of the recipient known to the party giving notice: notice is effective on receipt. Any notice given by fax will be deemed received on the next business day if it is received after 5:00 p.m. (recipient's time) or on a non-business day.

7. Addresses for purpose of giving notice are as follows:

CONTRACTOR: _____
_____
_____
_____
Fax: _____

CITY: City Clerk
City of Torrance
3031 Torrance Boulevard
Torrance, CA 90509-2970
Fax: (310) 618-2931

B. Any correctly addressed notice that is refused, unclaimed, or undeliverable because of an act or omission of the party to be notified, will be deemed effective as of the first date the notice was refused, unclaimed or deemed undeliverable by the postal authorities, messenger or overnight delivery service.

C. Either party may change its address or fax number by giving the other party notice of the change in any manner permitted by this Agreement.

21. PROHIBITION AGAINST ASSIGNMENT AND SUBCONTRACTING

This Agreement and all exhibits are binding on the heirs, successors, and assigns of the parties. The Agreement may not be assigned or subcontracted by either the CITY or CONTRACTOR without the prior written consent of the other.

22. INTEGRATION; AMENDMENT

This Agreement represents the entire understanding of the CITY and CONTRACTOR as to those matters contained in it. No prior oral or written understanding will be of any force or effect with respect to the terms of this Agreement. The Agreement may not be modified or altered except in writing signed by both parties.

23. INTERPRETATION

The terms of this Agreement should be construed in accordance with the meaning of the language used and should not be construed for or against either party by reason of the authorship of this Agreement or any other rule of construction that might otherwise apply.

24. SEVERABILITY

If any part of this Agreement is found to be in conflict with applicable laws, that part will be inoperative, null and void insofar as it is in conflict with any applicable laws, but the remainder of the Agreement will remain in full force and effect.

25. TIME OF ESSENCE

Time is of the essence in the performance of this Agreement.

26. GOVERNING LAW; JURISDICTION

This Agreement will be administered and interpreted under the laws of the State of California. Jurisdiction of any litigation arising from the Agreement will be in Los Angeles County, California.

27. COMPLIANCE WITH STATUTES AND REGULATIONS

CONTRACTOR will be knowledgeable of and will comply with all applicable federal, state, county and city statutes, rules, regulations, ordinances and orders.

28. WAIVER OF BREACH

No delay or omission in the exercise of any right or remedy by a nondefaulting party on any default will impair the right or remedy or be construed as a waiver. A party's consent or approval of any act by the other party requiring the party's consent or approval will not be deemed to waive or render unnecessary the other party's consent to or approval of any subsequent act. Any waiver by either party of any default must be in writing and will not be a waiver of any other default concerning the same or any other provision of this Agreement.

29. ATTORNEY'S FEES

Except as provided for in Paragraph 15, in any dispute, litigation, arbitration, or other proceeding by which one party either seeks to enforce its rights under this Agreement (whether in contract, tort or both) or seeks a declaration of any rights or obligations under this Agreement, the prevailing party will be awarded reasonable attorney's fees, together with any costs and expenses, to resolve the dispute and to enforce any judgment.

30. EXHIBITS

All exhibits identified in this Agreement are incorporated into the Agreement by this reference.

31. CONTRACTOR'S AUTHORITY TO EXECUTE

The persons executing this Agreement on behalf of the CONTRACTOR warrant that (i) the CONTRACTOR is duly organized and existing; (ii) they are duly authorized to execute this Agreement on behalf of the CONTRACTOR; (iii) by so executing this Agreement, the CONTRACTOR is formally bound to the provisions of this Agreement; and (iv) the entering into this Agreement does not violate any provision of any other Agreement to which the CONTRACTOR is bound.

CITY OF TORRANCE,
a Municipal Corporation

_____

_____

_____
Frank Scotto, Mayor

By: _____

ATTEST:

_____
Sue Herbers, City Clerk

APPROVED AS TO FORM:

JOHN L. FELLOWS III
City Attorney

By: _____

Deputy City Attorney

Attachments: Exhibit A: Bid

EXHIBIT A

Bid

[To be attached]

CITY OF TORRANCE
CONSTRUCTION OR SERVICE CONTRACT ENDORSEMENT

To be attached to and made a part of all policies insuring the liability of any person, form or corporation performing services under contract for the City of Torrance.

Not withstanding any inconsistent expression in the policy to which this endorsement is attached, or in any other endorsement now or hereafter attached thereto, or made a part thereof, the protection afforded by said policy shall:

1. Include the City of Torrance as an additional insured. (To include the elected officials, appointed officials, and employees.)

2. Indemnify and save harmless the City of Torrance against any and all claims resulting from the undertaking specified in the contract known as:

PROPOSAL, SPECIFICATIONS, BOND AND AFFIDAVIT
FOR THE CONSTRUCTION OF
Del Amo Boulevard Extension, T-30 – Phase 1
Reroute of Two Water and Two Sewer Pipelines
B2009-37

This hold harmless assumption on the part of the underwriters shall include all costs of investigation and defense, including claims based on damage to substructures not shown, not located on the plans, or shown incorrectly.

3. Not be cancelled except by notice to the City Attorney of the City of Torrance at least thirty (30) days prior to the date of cancellation.

4. Provide single limit for Bodily Injury Liability and Property Damage Liability combined, $1,000,000 each Occurrence, and $1,000,000 Aggregate.

5. Limited classifications, restricting endorsements, exclusions or other special provisions contained in the policy shall not act to limit the benefits of coverage as they shall apply to the City of Torrance as enumerated in this endorsement. However, nothing herein contained shall affect any rights of the insurer against the insured.

6. It is further expressly agreed by and between the parties hereto that the following two provisions, (a) and (b), are a part of this contract:

   (a) That the Contractor specifically agrees to comply with applicable provisions of Section 1777.5 of the Labor Code relating to the employment by contractor or subcontractor under it, of journeyman or apprentices, or workmen, in any apprenticeable craft or trade.

(b) By my signature hereunder, as Contractor, I certify that I am aware of the provisions of Section 3700 of the Labor Code which requires every employer to be insured against liability for Workers' Compensation or to undertake self-insurance in accordance with the provisions of that code, and I will comply with such provisions before commencing the performance of the work of this contract.

The limits of liability as stated in this endorsement apply to the insurance afforded by this endorsement notwithstanding that the policy may have lower limits of liability applying elsewhere in the policy.

_____
Duly Authorized Agent

Attached to and forming part of
Policy No._____
of the _____

Date: _____
Expiration Date:_____

WORKERS' COMPENSATION INSURANCE CERTIFICATION
B2009-37

In compliance with Section 7-4 of the Standard Specifications, the Contractor shall complete and submit the following certification with a Certificate of Insurance before execution of the contract.

I am aware of, and will comply with, Section 3700 of the Labor Code, requiring every employer to be insured against liability for Workers' Compensation or to undertake self-insurance before commencing any of the work.

_____
CONTRACTOR

By: _____

Title:_____

SECTION E

SPECIAL PROVISIONS

The following Special Provisions supplement and amend the Standard Specifications for Public Works Construction (2003) and the Standard Specifications of the State of California Department of Transportation (Caltrans) 2006, as noted herein. These Special Provisions have been arranged into a format that parallels the Standard Specifications for Public Works Construction.

SECTION E - SPECIAL PROVISIONS

TABLE OF CONTENTS

Page

PART 1 - GENERAL PROVISIONS 4

SECTION 1 - TERMS, DEFINITIONS, ABBREVIATIONS, UNITS OF MEASURE, AND SYMBOLS 4

1-2 DEFINITIONS 4
1-3 ABBREVIATIONS 4

SECTION 2 - SCOPE AND CONTROL OF THE WORK 5

2-1 AWARD AND EXECUTION OF CONTRACT 5
2-4 CONTRACT BONDS 5
2-5 PLANS AND SPECIFICATIONS. 5
2-6 WORK TO BE DONE 8
2-8 RIGHT-OF-WAY 9
2-9 SURVEYING 9
2-10 AUTHORITY OF BOARD AND ENGINEER 10
2.11 INSPECTION 10
2-13 GEOTECHNICAL REPORT 11

SECTION 3 – CHANGES IN WORK 12

3-3 EXTRA WORK 12
3-4 CHANGED CONDITIONS 13

SECTION 4 – CONTROL OF MATERIALS 13

4-1 MATERIAL AND WORKMANSHIP 13

SECTION 5 – UTILITIES 14

5-1 LOCATION 14
5-2 PROTECTION 14
5-3 REMOVAL 17
5-4 RELOCATION 17
5-5 DELAYS 17

SECTION 6 - PROSECUTION, PROGRESS AND ACCEPTANCE OF THE WORK 18

6-1 CONSTRUCTION SCHEDULE AND COMMENCEMENT OF WORK 18
6-7 TIME OF COMPLETION 19
6-8 COMPLETION, ACCEPTANCE AND WARRANTY 20
6-9 LIQUIDATED DAMAGES 20
6-11 SEQUENCE OF CONSTRUCTION 20

SECTION 7 - RESPONSIBILITIES OF THE CONTRACTOR 21

7-2 LABOR 21
7-3 LIABILITY INSURANCE 21
7-4 WORKER'S COMPENSATION INSURANCE 21
7-5 PERMITS 21
7-6 THE CONTRACTOR'S REPRESENTATIVE 22
7-8 PROJECT SITE MAINTENANCE. 22
7-9 PROTECTION AND RESTORATION OF EXISTING IMPROVEMENTS 24

7-10 PUBLIC CONVENIENCE AND SAFETY 25
7-16 RAILWAY RIGHTS-OF-WAY 27

SECTION 9 - MEASUREMENT AND PAYMENT 28

9-1 MEASUREMENT OF QUANTITIES FOR UNIT PRICE WORK 28
9-2 LUMP SUM WORK 28
9-3 PAYMENT 29
9-4 CLAIMS 30

PART 2 - CONSTRUCTION MATERIALS 31

SECTION 200 – ROCK MATERIALS 31

200-2 UNTREATED BASE MATERIALS 31

SECTION 203 – BITUMINOUS MATERIALS 31

203-6 ASPHALT CONCRETE 31

SECTION 207 – PIPE 31

207-1 NON REINFORCED CONCRETE PIPE 31
207-9 IRON PIPE AND FITTINGS 31

SECTION 210 – PAINT AND PROTECTIVE COATINGS 33

210-1 PAINT 33

SECTION 212 – LANDSCAPE AND IRRIGATION MATERIALS 34

212-1 LANDSCAPE MATERIALS 34

SECTION 215 – MISCELLANEOUS POTABLE WATER DISTRIBUTION SYSTEM MATERIALS 34

215-1 VALVES 34
215-2 FIRE HYDRANTS 36
215-3 BLOW-OFF HYDRANTS 36
215-4 INSULATING COUPLINGS, BUSHINGS AND UNIONS 37
215-5 SERVICE LATERALS 37
215-7 WATER METER BOX 39
215-8 FLEXIBLE COUPLINGS 39
215-9 PRECAST CONCRETE MANHOLES 40

PART 3 - CONSTRUCTION METHODS 40

SECTION 300 – EARTHWORK 40

300-1 CLEARING AND GRUBBING 40
300-2 UNCLASSIFIED EXCAVATION 42

SECTION 301 – TREATED SOIL, SUBGRADE PREPARATION, AND PLACEMENT OF BASE MATERIALS 42

301-2 UNTREATED BASE 42

SECTION 302 – ROADWAY SURFACING 42

302-5 ASPHALT CONCRETE PAVEMENT 42

SECTION 303 – CONCRETE AND MASONRY CONSTRUCTION 43

303-5 CONCRETE CURBS, WALKS, GUTTERS, CROSS GUTTERS, ALLEY INTERSECTIONS, ACCESS RAMPS, AND DRIVEWAYS. 43

SECTION 306 – UNDERGROUND CONDUIT CONSTRUCTION 44

306-1 OPEN TRENCH OPERATIONS 44
306-2 JACKING OPERATIONS 53
306-3 TUNNELING OPERATIONS 54
306-5 ABANDONMENT OF CONDUITS AND STRUCTURES 54
306-9 SEWER BYPASS 56

SECTION 310 – PAINTING 57

310-5 PAINTING VARIOUS SURFACES 57

SECTION 313 – INSTALLATION OF MISCELLANEOUS POTABLE WATER DISTRIBUTION SYSTEM MATERIALS 59

313-1 CONNECTIONS TO EXISTING POTABLE WATER MAINS 59
313-2 INSTALLATION OF VALVES 60
313-3 INSTALLATION OF AIR AND VACUUM RELEASE VALVES 60
313-4 FIRE HYDRANTS 60
313-5 BLOW-OFF ASSEMBLIES 61

PART 1 - GENERAL PROVISIONS

SECTION 1: TERMS, DEFINITIONS, ABBREVIATIONS, UNITS OF MEASURE, AND SYMBOLS

1-2 DEFINITIONS

Add or redefine the following:

AGENCY – THE CITY OF TORRANCE, HEREIN REFERRED TO AS CITY.

Board – The City Council of the City of Torrance, herein referred to as City Council.

Caltrans – The State of California, Department of Transportation Standard Specifications, May 2003

Engineer – Engineer of the City of Torrance, acting either directly or through properly authorized agents, such agents acting within the scope of the particular duties entrusted to them.

Claim – A separate demand by the Contractor for (A) a time extension, (B) payment of money or damages arising from work done by or on behalf of the Contractor pursuant to the Contract and payment of which is not otherwise expressly provided for or the claimant is not otherwise entitled to, or (C) an amount the payment of which is disputed by the Agency.

1-3 ABBREVIATIONS

1-3.2 Common Usage:

Add the following abbreviations:

Approx	Approximate
APWA	American Public Works Association
BNSF	Burlington Northern Santa Fe Railway Company
CA	City Arborist
CalWater	California Water Service Company
City	City of Torrance
Exist.	Existing
HASP	Health & Safety Plan
LACMTA	Los Angeles County Metropolitan Transit Authority
LACSD	County Sanitation Districts of Los Angeles County
Med.	Median
M.L.	Main Line
OH	Overhead
Ped.	Pedestrian
Reconst.	Reconstruct
SPPWC	Standard Plans for Public Works Construction
SWPPP	Storm Water Pollution Prevention Plan
Temp.	Temporary
Theo.	Theoretical
WM	Wire mesh or water meter

SECTION 2 - SCOPE AND CONTROL OF THE WORK

2-1 AWARD AND EXECUTION OF CONTRACT

Replace the entire subsection with the following:

Within ten (10) working days after the date of the CITY'S award of contract, the Contractor shall execute and return all Contract Documents required by the CITY. The CITY reserves the right to terminate the award if the above requirement is not met. Such termination will result in the forfeiture of the Proposal Guaranty.

The Contract shall not be considered binding upon the CITY until executed by the authorized CITY officials.

2-4 CONTRACT BONDS

Revise the second sentence of the fourth paragraph to read as follows:

The "Performance Bond" shall remain in effect for one year following the date specified in the Notice of Completion or, if no Notice of Completion is recorded, for one year following the date of final acceptance by the Engineer.

2-5 PLANS AND SPECIFICATIONS.

2-5.1 General. Add the following sentence to the first paragraph to read as follows:

The Contractor shall maintain a control set of Plans and Specifications on the Work site at all times. All final locations determined in the field, and any deviations from the Plans and Specifications, shall be marked in red on this control set to show as-built conditions. Upon completion of the Work, the Contractor shall submit the control set to the Engineer for approval. Final payment will not be made until this requirement is met.

Add the following subsections:

2-5.1.1 Plans. Included as part of the Contract Documents are the following, which show the location, character, dimensions or details of the Work:

1) Project Plans

   The existing utility information data provided with the Contract Documents are based on existing plans and documents. The data provided for information only. The Owner does not guarantee their accuracy and correctness. If the Bidder in preparing the Bid Proposal uses this information, the Bidder assumes all risks resulting from conditions differing from the information shown. The Bidder, in consideration for the information being provided, hereby releases the Owner and Consulting Engineer from any responsibility of obligation as to the accuracy of such information or for any additional compensation for work performed due to assumptions based on the use of such information.

2) Standard Plans

   a. City of Torrance Standard Plans, latest edition

b. Standard Plans for Public Works Construction, 2003, promulgated by Public Works Standards, Inc.

c. Standard Plans of the State of California Department of Transportation (Caltrans), 2006

d. Standard Plans of the Los Angeles County Department of Public Works, latest edition

Applicable Standard Plans for this project are included in the Appendices of these Specifications.

2-5.1.2 Specifications. The Work shall be performed or executed in accordance with these Special Provisions and the following:

1) Standard Specifications for Public Works Construction, 2003 and supplements thereto, hereinafter referred to as the Standard Specifications, as written and promulgated by Public Works Standards, Inc. The Standard Specifications are published by BNi Building News, Inc., 1612 South Clementine Street, Anaheim, CA 92802, Phone: (800) 873-6397.

2) When referenced in these Special Provisions, the State of California Department of Transportation (Caltrans) Standard Specifications, (2006 or latest edition).

3) American Water Works Association Standards, latest edition.

4) For county sewer lines, the County Sanitation Districts of Los Angeles County, Amendments to the Standard Specifications for Public Works Construction, 2003 edition, as referenced in Appendix VIII.

2-5.2 Precedence of Contract Documents. Replace the entire subsection with the following:

If there is a conflict between any of the Contract Documents, the document highest in precedence shall control. The order of precedence shall be as follows:

1) Permits issued by other agencies.
2) Change Orders (including Plans and Specifications attached thereto).
3) Public Works Agreement
4) Addenda
5) For Cal Water 18" Water Pipeline – Plans
6) For LACSD 24" Sewer Pipeline - County Sanitation Districts of Los Angeles County Amendments to the Standard Specifications for Public Works Construction
7) Special and General Provisions
8) Plans (For City of Torrance Water and Sewer)
9) City Standard Plans
10) Other Standard Plans
11) Standard Specifications for Public Works Construction
12) Reference Specifications

With reference to the Plans/Drawings, the order of precedence is as follows:

1) Change Order plans govern over Addenda and Contract plans
2) Addenda plans govern over Contract plans

3) Contract plans govern over standard plans
4) Detail plans govern over general plans
5) Figures govern over scaled dimensions

Within the Proposal, Specifications, Bond and Affidavit the order of precedence is as follows:

1) Change Orders

2) Permits from other agencies/Supplemental Agreements, including:

- For construction on Burlington Northern & Santa Fe Railway Company's (BNSF) property – Pipeline Licenses & Overpass Agreement
- For Construction on Los Angeles County Metropolitan Transportation Authority's (LACMTA) Property – Overpass Agreement
- For construction of the California Water Service Company's (Cal Water) 18" water pipeline – Water Pipeline Relocation Agreement
- For construction of the County Sanitation Districts of Los Angeles County (LACSD) 24" sewer pipeline – Sewer Relocation Agreement & Amendment to the Sewer Relocation Agreement
- DOW Chemical Company – Purchase & Sale Agreement
- For work on ExxonMobil Oil Corporation's (ExxonMobil) property – 1999 Agreement, Amendment No 1 to 1999 Agreement, & Right of Entry Agreement
- For work on or near MCImetro Access Transmission Services, LLC facilities – Reimbursement Agreement
- For work on TMT South Bay Business Park, Inc's (TMT) property – Agreement for Conveyance of Property

NOTE: Contractor shall be incompliance with the requirements of the above agreements for the work as they are applicable. See Appendices for agreements.

3) Special Provisions
4) Instruction to Bidders
5) Referenced Standard Plans
6) Referenced Standard Specifications

If the Contractor, during the Work, becomes aware of any claimed errors or omissions in the Contract Documents or in the CITY's fieldwork, the Contractor shall immediately inform the Engineer. The Engineer shall promptly review the matter, and if the Engineer finds an error or omission has been made, the Engineer shall determine the corrective action and advise the Contractor accordingly. If the corrective work associated with an error or omission increases or decreases the amount of work called for in the Contract, the CITY shall issue an appropriate Change Order in accordance with 3-3. After discovery of an error or omission by the Contractor, any related work performed by the Contractor shall be done at the Contractor's risk unless authorized by the Engineer.

2-5.3 Submittals

2-5.3.2 Working Drawings. Add the following:
In addition to the shop drawings required per Table 2-5.3.2 (A), the following shop drawings

are required:

Item	Subsection Number	Title	Subject
18	7-8.6.2	Storm Water Pollution Prevention Plan (SWPPP)	SWPPP
19	7-10.4.5	Health and Safety Plan (HASP)	HASP
20	306-9	Sewer Bypass Plan	Sewer Bypassing

Revise the fourth paragraph of the Standard Specifications to add the following:

For the County Sanitation District's sewer, Contractor shall submit all engineering submittals to the District's Sewer Design Section in accordance with the April 29, 2009 Letter in Appendix XIII. The Contractor shall provide a duplicate of all engineering submittals to the City.

2-5.3.4 Supporting Information. Add the following to the second paragraph:

9) Ductile iron pipe (or CL&C), fittings and appurtenances

10) Sewer pipe, joints, connections, manhole and related material specifications

11) Proposed haul routes material disposal and delivery

11) Water main construction sequence

12) Water main appurtenances

13) Disinfection Plan

14) Crushed miscellaneous base mix design/properties

15) Asphalt Concrete mix designs from one or more suppliers

16) Fire hydrant appurtenances

In addition to the above, submittals may be required for any product, manufactured item, or system not specifically listed above.

2-6 WORK TO BE DONE

Add the following:

The Work consists of the rerouting of an existing 24" City of Torrance water pipeline, 18" California Water Service Company (Dominguez Water Company) water pipeline, 24" Los Angeles County Sewer Pipeline and a 10" & 12" City of Torrance Sewer Pipeline to accommodate the future extension of Del Amo Boulevard between Crenshaw Boulevard and Maple Avenue. It includes the jacking and boring of pipelines underneath the Burlington Northern Santa Fe mainline and spur line rails.

2-8 RIGHT-OF-WAY

Add the following:

Rights-of-way, easements, or rights-of entry for the Work, as shown on the plans, will be provided by the Agency with the exception of Railway rights-of-way which is described in Section 7-16 herein.

2-9 SURVEYING

2-9.2 Survey Service. Replace the first two paragraphs with the following:

All construction surveying necessary to complete the Work shown on the Plans and provided in these Contract Documents shall be accomplished by or under the direction of a Registered Land Surveyor or Registered Civil Engineer authorized to practice land surveying in the State of California, retained or provided by the Contractor. The CITY reserves the right to direct additional construction survey work to be performed at no additional cost when the City determines it is required to adequately construct the Work.

The Contractor shall notify the Engineer in writing at least 2 working days prior to the actual survey. The Contractor shall provide any required the traffic control necessary for construction surveying.

Stakes shall be set and stationed by the Contractor for curbs, curbs and gutters, gutters, headers, sewers, water lines, spandrels, catch basins, rough grade, and other items as necessary. A corresponding cut or fill to finished grade (or flow line) shall be indicated on a grade sheet. A copy of each grade sheet shall be furnished to the Engineer. If any construction survey stakes are lost or disturbed and need to be replaced, such replacement shall be by the Contractor at its expense.

Construction stakes shall consist of the following:

a. Offset line and grade stakes for gravity sewer at 50-foot intervals with grade sheets indicating cut to the pipe invert.

b. One set of control stakes for manholes and jacking pits.

c. Pipe heading checks for line and grade at each manhole.

The Contractor shall submit to the City within 2 days after completion of each respective survey, setting of each stake and heading check a copy of the survey notes and calculations certified by the licensed Land Surveyor for the following:

a. Level and horizontal control circuit for survey control.
b. Grade sheets for pipeline stakes.
c. Pipe heading checks.

2-9.5 Payment.

Payment for SURVEYING/POTHOLING shall be on a Lump Sum basis per the Contract unit price. All costs for construction survey staking and potholing including construction staking, professional services, office calculations, furnishing all labor, materials, equipment, tools and incidentals, and for doing all work involved shall be considered as included.

2-10 AUTHORITY OF BOARD AND ENGINEER

Add the following:

Failure of the Contractor to comply with the requirements of the Contract Documents, or to follow the directions of the Engineer, and/or to immediately remedy such noncompliance or to follow directions, may, upon notice from the Engineer, result in the suspension of the Contract monthly progress payments. Any monthly progress payments so suspended may remain in suspension until the Contractor is in compliance with the Contract Documents and the directions of the Engineer, as determined by the Engineer.

2.11 INSPECTION

Replace the entire subsection with the following:

The Work is subject to inspection and approval by the Engineer, California Water Service Company (1 water pipeline only) and Los Angeles County Sanitation District (1 sewer pipeline only). The Contractor shall notify the Engineer a minimum of 48 hours in advance of the required inspection.

Additionally, requests for inspection related to the California Water Service Company water pipeline shall be made two (2) weeks in advance of commencement of construction and to Charles Leonard at (310)257-1400 ext. 71427 or (310) 420-8549. Access shall be made available to California Water Service Company's inspector at all times.

Additionally, requests for inspection related to the Los Angeles County Sanitation District sewer pipeline (at the manufacturer's facility and at the job site) shall be made in accordance with section 10 of the Sewer Relocation Agreement as listed in Appendix XIII and per general note #4 of drawing SS-102.

The Engineer will make, or have made, such inspections and tests as he deems necessary to see that the Work is in conformance with the Contract Documents. In the event such inspections or tests reveal noncompliance with the Contract Documents, the Contractor shall bear the cost of such corrective measures as deemed necessary by the Engineer, as well as the cost of subsequent re-inspection and re-testing.

Work done in the absence of inspection by the Engineer may be required to be removed and replaced under the inspection of the Engineer, and the entire cost of removal and replacement, including the cost of all materials which may be furnished by the CITY and used in the work thus removed, shall be borne by the Contractor, regardless of whether the work removed is found to be defective or not. Work covered without the approval of the Engineer shall, if so directed by the Engineer, be uncovered to the extent required by the Engineer, and the Contractor shall similarly bear the entire cost of performing all the work and furnishing all the materials necessary for the removal of the covering and its subsequent replacement, including all costs for additional inspection.

The Engineer and any authorized representatives shall at all times have access to the Work during its construction at shops and yards as well as the Work site. The Contractor shall provide every reasonable facility for ascertaining that the materials and workmanship are in accordance with the Contract Documents.

Inspection of the Work shall not relieve the Contractor of the obligation to fulfill all conditions of the Contract.

Add the following subsections:

2-11.1 Special Inspection Fees. If the Contractor elects to work under this Contract more than 8 hours/day or more than 40 hours/week, Saturday, Sunday, or CITY holidays, the Contractor shall arrange with the Engineer for the required inspection service and pay the Special Inspection Fees which will be charged at the following rates:

Mondays through Fridays	-	$100.00 per hour
Saturdays, Sundays, Holidays	-	$1,000.00 per day

Fees may be deducted from payments due to the Contractor at the discretion of the Engineer.

If the Contractor works under this contract at times other than within the allowed working hours <u>without permission from or prior arrangement with the Engineer</u>, the Contractor will be charged a lump sum amount of $2,000.00 for each occurrence, in addition to the above fees. The amount will be deducted from a Progress Payment.

2-11.2.1 General Requirements. The Contractor shall comply with the following requirements:

1) Unused or abandoned potable water lines are to be severed as close to water mains as practical, capped, and a 10-foot section of abandoned line removed and cemented under CIty and Cal Water supervision.

2-11.2.3 Inspections During Construction. During the construction, the Contractor shall make the Work site available for periodic inspections by any associated regulatory agency. These agencies may include: Los Angeles County Department of Health Services, Los Angeles Regional Water Quality Control Board, the State of California Department of Health Services Drinking Water Field Operations Branch, and CITY Water Department.

2-11.3 Material Inspection/Testing and other City Expenses.

(a) If a City subcontractor hired to perform material inspection and/or testing is required to work additional time to perform inspection and testing as a result of an action or delay caused by the Contractor, except for specific work allowed by the Engineer, the subcontractor may charge the City an additional fee. The Engineer may deduct the additional fee for said inspection and testing from a Progress Payment to the Contractor. The Engineer also may deduct the cost to perform additional testing when an initial test fails to meet the requirements of this Contract. The typical rates for material testing and inspection are available upon request from the Public Works Department.

(b) If the Contractor does not comply with a requirement of these Special Provisions or if it does not respond, after being informed, to a request by the Engineer to amend a site condition that jeopardizes the public health, safety or welfare, the Engineer may direct City crews to perform the work. For each occurrence, the City may charge the Contractor a base charge in the amount of $750 in addition to all costs incurred by City crews for labor, equipment and materials. The standard rates for City crews are available upon request from the Public Works Department.

2-13 GEOTECHNICAL REPORT

Add a subsection as follows:

The geotechnical report for the project area is available for viewing at the City of Torrance,

Public Works Department, 20500 Madrona Ave, Torrance, California 90503. Bidders may contact Beth Overstreet, (310) 618-3074 during normal business hours and schedule an appointment to review the geotechnical report.

SECTION 3 – CHANGES IN WORK

3.3 EXTRA WORK

3-3.1 General. Add the following:

Payment for additional work and all expenditures in excess of the Contract price must be authorized in writing by the Engineer. Such authorization shall be obtained by the Contractor prior to engaging in additional work. It shall be the Contractor's sole responsibility to obtain written approval from the Engineer for any change(s) in material or in the work proposed by suppliers or subcontractors. No payment shall be made to the Contractor for additional work which has not been approved in writing, and the Contractor hereby agrees that it shall have no right to additional compensation for any work not so authorized.

The Contractor shall be responsible to provide all data and to obtain all approvals required by the Specifications, including submittal of Daily Extra Work Reports. No claims or extras shall be approved by the Engineer unless all work was done under the direction of and subject to the approval of the Engineer. Disputed work claims shall comply with 3-3 as modified herein.

3-3.2.2 Basis for Establishing Costs. Replace the second paragraph of part (c) with the following:

The Contractor will be paid for the use of equipment at the lower of the actual rental rates paid by the Contractor or the rental rates listed for such equipment in either the "Rental Rate Blue Book" published by Dataquest, Inc., 1290 Ridder Park Drive, San Jose, California 95131; telephone (408) 971-9000 or the California Department of Transportation publication entitled "Labor Surcharge and Equipment Rates" available at the Caltrans web site, www.dot.ca.gov/hq/eqsc/inforesources.htm , which is in effect on the date upon which the work is accomplished, and that hereby is made a part of the Contract, regardless of ownership or any rental or other agreement, if such may exist, for the use of such equipment entered into by the Contractor. If it is deemed necessary by the Engineer to use equipment not listed in the said publication, a suitable rental rate will be established by the Engineer. The Contractor may furnish any cost data that might assist the Engineer in the establishment of such rental rate.

3-3.2.3 Markup. Replace the entire subsection with the following:

The markups mentioned hereinafter shall include, but are not limited to, all costs for the services of superintendents, project managers, timekeepers and other personnel not working directly on the change order, and pickup or yard trucks used by the above personnel. These costs shall not be reported as labor or equipment elsewhere except when actually performing work directly on the change order and then shall only be reported at the labor classification of the work performed.

(a) Work by Contractor. The following percentages shall be added to the Contractor's costs and shall constitute the mark-up for all overhead and profit, which shall be deemed to include all items of expense not specifically designated as cost or equipment rental in Subsections 3-3.2.2(a), 3-3.2.2(b), and 3-3.2.2(c).

Labor	20
Materials	15
Equipment Rental	15
Other Expenditures	15

To the sum of the costs and markups provided for in this subsection, one (1) percent shall be added as compensation for bonding.

(b) Work by Subcontractor. When any part of the extra work is performed by a subcontractor, the markup established in 3-3.2.3(a) shall be applied to the subcontractor's actual cost of such work. A markup of ten (10) percent on the first $5,000 of the subcontracted portion of the extra work and a mark-up of 5 percent on work added in excess of $5,000 of the subcontracted portion of the extra work may be added by the Contractor.

The markups specified in parts (a) and (b) above shall be considered as including, but not limited to, the Contractor's labor costs for personnel not working directly on the extra work, including the cost of any tools and equipment that they may use. Such costs shall not be reported as labor or equipment costs elsewhere except when they are actually used in the performance of the extra work. Labor costs shall in that case be reported for the labor classification corresponding to the type and nature of extra work performed.

3-4 CHANGED CONDITIONS. Add the following:

This subsection does not apply to utilities.

3-4.1 Payment

An allowance is included in the bid contract price for SOIL CONTAMINATION. If, in the event contaminated soil is encountered, Contractor will be paid for approved work performed, on a negotiated time and material basis to remove and dispose of material.

SECTION 4 – CONTROL OF MATERIALS

4-1 MATERIAL AND WORKMANSHIP

4-1.1 General. Add the following paragraph after the second paragraph:

If the work, or any portion thereof, shall be damaged in any way, or if any defective materials or faulty workmanship shall be discovered at any time prior to the final payment, the Contractor shall forthwith, at its own cost and expense, repair said damage, or replace such defective materials, or remedy such faulty workmanship in a manner satisfactory tot he Engineer.

4-1.2 Protection of Work and Materials. Add the following:

The Contractor shall assume all risks and expense of interference and delay in his operations, and the protection from or the repair of damage to improvements being built under the contract, as may be caused by water of whatever quantity from floods, storms, industrial waste, irrigation, underground or other sources. However, the Contractor shall be entitled to an extension of time in accordance with the provisions of Subsection 6-6. The Contractor shall also assume full responsibility and expense of protecting, or removing and returning to the site of Work, all equipment or materials under his care endangered by any action of the elements.

Furthermore, the Contractor shall indemnify and hold the City harmless from all claims or suits for damages arising from his operations in dewatering the Work and control of water.

SECTION 5 – UTILITIES

5-1 LOCATION

Add the following:

The Contractor shall provide coordination with all the utility companies involved and shall provide protection from damage to their facilities. The Contractor shall be responsible for repair or replacement to said facilities made necessary by its failure to provide required protection. The Contractor is required to include utility requirements in the Construction Schedule per Section 6-1.

The Contractor shall be solely responsible to check all utility record maps, books, and/or other data in the possession of the CITY, other agencies, and/or all utility companies, and no allowance shall be made for any failure to have done so.

The Contractor shall utilize the services of "Underground Service Alert-Southern California" for utility locating in all public right-of-ways by calling 1-800-227-2600 at least 48 hours prior to any excavation.

The new piping shall go over or under the existing utilities as indicated on the plans. Where not indicated, the Contractor shall assume that the new piping will cross <u>under</u> the existing utility. The Contractor shall pothole existing utilities which may interfere with construction as shown on the plans, as directed by the Engineer or as deemed necessary by the Contractor. The cost of potholing herein specified shall be included in the prices paid for other items of work and no additional compensation will be allowed.

Where water lines exist, at each angle point, cross connection and “T” connection, the Contractor, for bidding purposes, shall assume the existence of a concrete thrust block located such as to resolve thrust loads. Any and all costs resulting from the existence of a thrust block, including costs for its removal and restoration if required, shall be deemed as being included in the prices bid for the various items of work.

Underground lines that are potentially hazardous such as oil company lines, natural gas mains, and electrical conduits will be carefully located by the owner as provided in the Standard Specifications. The Contractor shall take special precautions in determining the precise location and depth of these structures to insure that they will not be damaged by its operations.

Substitute the following for the last paragraph:

Prior to starting construction, the Contractor shall be responsible to determine the location and depth of all utilities which have been marked by the respective owners and which may affect or be affected by its operations. The Contractor also shall determine the location and depth of each service connection, whether or not marked. Full compensation for such work shall be considered as included in the prices bid for other items or work. If a utility which was marked or a service connection is found to interfere with the work after construction has commenced, the Contractor shall be solely responsible for all costs of any delay and for any costs which could have been avoided if the Contractor had located the utility prior to start of construction.

5-2 PROTECTION

Add the following:

If, in the course of construction, the Contractor damages a sewer lateral or water lateral, the

Contractor shall be responsible to completely expose said lateral from the main line to the point of connection at private property to verify integrity of all joints to the satisfaction of the Engineer. This shall not be considered to be extra work and no extra costs shall be allowed therefor.

Sewers, including lateral repairs, shall be constructed of Vitrified Clay Pipe, unless otherwise approved in writing by the Engineer.

Add the following after the final paragraph:

As noted in subsections 5-2.1, 5-2.2 and 5-2.3 utilities are classified and are to be handled in one of three ways by the Contractor in the course of performing the contract.

5-2.1 Noninterfering Utilities

Utilities that are not abandoned by the owner and do not physically interfere with the permanent work in its final location shall be supported, protected and maintained in place by the Contractor, and the Contractor shall be solely responsible for any damage, loss or injury, or death resulting from his/her failure to do so and the Contractor shall indemnify and hold harmless the City from any and all such consequences. Noninterfering utilities may, with the permission of the owner and the Engineer, be relocated still farther from the permanent work in its final locations, but the Contractor shall not so consider, in submitting his bid, unless the relocation is shown on the plans.

5-2.2 Abandoned Utilities

Abandoned utilities are those portions of any utility which are no longer needed or desired by the owner and whose destruction is consented to by the owner and/or is permitted by notation on the plans. Abandoned utilities which physically interfere with the permanent work or with the construction thereof shall be removed by the Contractor and the Contractor shall be solely responsible for any damage, loss or injury, or death resulting from the removal and the Contractor shall indemnify and hold harmless the City from any and all such consequences.

5-2.3 Interfering Utilities

Any utility shall be deemed an interfering utility (1) which physically occupies any part of the space to be occupied by the permanent work in its final locations, or (2) whose length within the theoretical width of excavation for the permanent work exceeds five times the width of said theoretical excavation whether or not the utility physically interferes with the permanent work. Interfering utilities that are not abandoned by the owner shall be relocated so as not to interfere with the permanent work in its final location. Such relocation will be performed by the owner or the City unless otherwise shown on the plans.

The Contractor shall exercise caution to prevent damage to or movement of the utilities while constructing the permanent work along and adjacent to the utilities.

Should a manhole extend within a trench excavation, the Contractor shall choose one of the following methods of construction and shall assume all responsibilities thereof:

(1) Support and maintain the manholes in place during the construction of the permanent work in open cut.

(2) Remove the shaft and maintain the base of the manhole in place until the backfill is placed and compacted; then reconstruct the manhole shaft.

(3) Use another method of construction which has been submitted to and approved by the Engineer. All costs for the work pertaining to the manholes that might be found to extend partially within the excavation limits or any protective measures required due to the proximity of the manholes and the permanent work at these locations shall be absorbed in the prices bid for the various items of work.

5-2.2 Protection of Underground Hazardous Utilities. This Subsection shall apply to projects where there are underground utilities within the Work area which may be potentially hazardous if damaged. A hazardous substance shall be defined as one having the potential for an immediate disaster such as, but not limited to, gasoline, electricity, fuel oil, butane, propane, natural gas, chlorine or other chemicals.

Abandoned or inoperative utilities designed to carry hazardous substances and unidentified or unknown utilities shall be considered hazardous until determined otherwise. Whenever the Contractor is directed by the Engineer to tap these lines, the Contractor shall provide personnel specialized in this work and payment therefore will be considered as extra work per 3-3 of these Special Provisions.

The Contractor shall comply with the following requirements when working around underground hazardous utilities:

1) The Contractor shall not trench or excavate within the area where a utility known to carry a hazardous substance exists until its location has been determined by excavation or other proven methods acceptable to the Engineer. The intervals between exploratory excavations or location points shall be sufficient to determine the exact location of the line. Unless otherwise directed by the Engineer, excavation for underground hazardous utilities shall be performed by the Contractor and paid for as specified per 5-1 of these Special Provisions.

2) If it is determined that the horizontal or vertical clearance between the utility known to carry hazardous substances and the construction limit is less than 300 mm (12 inches) (450mm (18 inches) if scarifying), the Contractor shall confer with its owner. Unless the owner elects to relocate the line or take it out of service, the Contractor shall not excavate until the line has been completely exposed within the limits of construction.

3) Once the physical location of the utility known to carry hazardous substances has been determined, the Contractor, in cooperation with and with the concurrence of the utility owner, shall determine how to protect and/or support the utility from damage before proceeding with the Work.

4) During all excavation and trenching operations, the Contractor shall exercise extreme caution and protect the utilities from damage.

5) The Contractor shall notify the Engineer, the public agency maintaining records for the jurisdiction in which the Project is located and the owner, if known, whenever previously unidentified or unknown underground utilities are encountered so that the location can be accurately established and made a part of permanent substructure records.

Full compensation for protecting underground hazardous utilities as specified or noted on the Plans shall be considered as included in the prices bid for the various items of work.

5-3 REMOVAL

Add the following:

It shall be the Contractor's responsibility irrespective of the notations on the plans to confirm or determine that a utility is to be abandoned before treating the same as an abandoned utility and shall assume all risks in so determining.

5-4 RELOCATION

Add the following:

Fire hydrants shall be relocated by Contractor per City of Torrance Standard Plan T706 as directed by the Engineer.

Water valves shall be relocated by the Contractor per City of Torrance Standard Plan T712.

Substitute the following for the last paragraph:

For the purpose of these specifications, service connections shall be construed to mean all, or any portion of, the pipe, conduit, cable, or duct which connects a utility main distribution line to the meter of an individual user, and further, shall include the meter and such portions of said pipe, conduit, cable or duct on the user's side of the meter which affect the contract work or its prosecution.

The City will arrange for the alteration or permanent relocation of only such service connections, except sewer house connections and water laterals, that interfere with the permanent work in its final location and such alteration or permanent relocation will be performed by others at no expense to the Contractor. The Contractor shall be responsible for the alteration or permanent relocation of sewer connections and water laterals, unless otherwise approved by the Engineer.

In instances where the alteration or permanent relocation of interfering service connections can be avoided by encasing same in the slabs or walls of poured-in place concrete structures the Contractor shall, when directed by the Engineer, so encase such service connections, and any costs for such work shall be absorbed in the unit prices or included in the lump sum amounts bid for the various items of work.

Service connections which do not interfere with the project structures shall be maintained in place by the Contractor. The cost of such work shall be absorbed in the unit prices or included in the lump sum amounts bid for the various items of work.

5-5 DELAYS

Substitute the following:

The Contractor is responsible for notifying the City in time to prevent delays attributable to utility relocations or alterations. The Contractor shall not be entitled to damage or additional payment, nor shall it be entitled to standby time for men or equipment if such delay does occur. The Engineer will determine the extent of the delay attributable to such interferences, the affect of the delay on the project as a whole, and any commensurate extension of time.

Any failure of the City and/or utility company to accomplish relocations in a reasonable manner in light of the Contractor's operations (to the extent such operations would otherwise be feasible and in accordance with the contract and as disclosed to the City prior to the Contractor

encountering any such utility) shall entitle the Contractor to an extension of contract time to the extent that, in the judgment of the Engineer, the Contractor's completion of the overall contract work has been delayed; however, the Contractor shall be entitled to no other remedy and, in submitting its bid, thereby waives such other remedies, if any, unless the relocation delay is the result of arbitrary, capricious or malicious conduct by the City.

SECTION 6 - PROSECUTION, PROGRESS AND ACCEPTANCE OF THE WORK

6-1 CONSTRUCTION SCHEDULE AND COMMENCEMENT OF WORK

Replace the entire subsection with the following:

6-1.1 General. Within ten (10) working days after the date of the CITY's execution of the Contract, the Contractor shall submit a proposed construction schedule to the Engineer for approval. The schedule shall be in accordance with 6-1.2 and 6-1.3 and shall be in sufficient detail to show chronological relationship of all activities of the Work. These include, but are not limited to: submittal of shop drawings to the Engineer for approval, procurement of materials and scheduling of equipment; and estimated starting and completion dates of various activities.

Prior to issuing the Notice to Proceed, the Engineer will schedule a Pre-Construction Meeting with the Contractor to review the proposed construction schedule and delivery dates, arrange utility coordination and clarify inspection procedures.

An Administrative Notice to Proceed may be given, at the City's option, to allow the contractor to begin some of the contract work. Contractor access to the site may or may not be given with the Administrative Notice to Proceed. The duration of time between the Administrative Notice to Proceed and Full Notice to Proceed shall not be included in the required contract duration.

Notwithstanding any other provisions of the Contract, the Contractor shall not be obligated to perform any work and the CITY shall not be obligated to accept or pay for any work performed by the Contractor prior to delivery of a Notice to Proceed. The CITY's knowledge of work being performed prior to delivery of the Notice to Proceed shall not obligate the CITY to accept or pay for such work. The Contractor shall provide all required Contract bonds and evidences of insurance prior to commencing work at the site.

6-1.2 Criteria. The construction schedule shall conform to the following criteria:

1) The schedule shall be prepared using the latest version of Primavera or Microsoft Project or approved equal.

2) Work activities shall be based on the items of work per 2-6, and the following:

   a) Contract unit price items shall be subdivided into those portions to be constructed during each stage or phase of construction.

   b) Lump sum items shall be subdivided into those portions to be constructed during each stage or phase of construction.

3) Utility relocations by Contractor and "By Others" shall be considered as activities.

4) Required submittals and shop drawings shall be included as activities.

5) The procurement of construction materials and equipment with long lead times for deliveries shall be included as activities.

6) Work to be performed by subcontractors shall be identified and shown as work activities.

7) Start and completion dates of each activity shall be illustrated.

8) Completion of all Work under the Contract shall be within the time specified in 6-7 of these Special Provisions and in accordance with the Plans and Specifications.

6-1.3 Requirements. In preparing the construction schedule, the following items shall be considered:

Sequence of Construction - The Contractor shall sequence the Work in a manner to expeditiously complete the project with a minimum of inconvenience to the adjacent properties and to conform to the following:

1) Clearing and Grubbing

2) Subsection 307-1.3 regarding the ordering of materials.

3) All Work shall only be performed between the hours of 7:00 a.m. and 5:00 p.m., unless otherwise approved by the Engineer.

4) A move-in period of 10 calendar days will be allowed starting on the date in the Notice to Proceed.

5) Weekly job site meetings, which include the ENGINEER or designate, inspectors and Contractor foreman and/or superintendent. Meetings will be approximately 1 hour.

6-1.4 Updates. The Contractor shall submit 3 paper copies of the updated construction schedule to the Engineer on the first working day of each month.

If the Contractor decides to make a major change in the method of operations after commencing construction, or if the schedule fails to reflect the actual progress, the Contractor shall submit to the Engineer a revised construction schedule in advance of beginning revised operations.

6-1.5 Payment

Full compensation for complying with all requirements of Section 6-1.4 will be per the Contract unit price for CONSTRUCTION SCHEDULE. If the Contractor fails to submit an updated Construction Schedule to the Engineer on the first working day of each month, the CITY will deduct one-fifth the amount of the Contract unit price for each work day after the due date, up to five working days, thereafter. After the fifth subsequent working day, the Contractor will not be compensated for the updated schedule for that month, regardless of whether it submits an updated schedule.

6-7 TIME OF COMPLETION

6-7.1 General. Replace the first sentence with the following:

The Contractor shall complete the work within 180 working days from the start date specified in the Notice to Proceed.

6-8 COMPLETION, ACCEPTANCE AND WARRANTY

Replace the second paragraph with the following:

If, in the Engineer's judgment, the Work, or portion of the entire Work, has been completed and is ready for acceptance, the Engineer will so certify and will determine the date when the Work was completed. This will be the date when the Contractor is relieved from responsibility to protect the Work. The Engineer may cause a Notice of Completion to be filed and recorded with the Los Angeles County Recorder's Office. At the Engineer's option, the Engineer may certify acceptance to the City Council who may then cause a Notice of Completion to be filed and recorded with the Los Angeles County Recorder's Office.

Add the following subsection:

6-8.1 Manufacturer's Warranties. Manufacturer's warranties shall not relieve the Contractor of liability under these Specifications. Such warranties only shall supplement the Contractor's responsibility.

The Engineer may, at his option, require a manufacturer's warranty on any product offered for use.

6-9 LIQUIDATED DAMAGES

Replace the entire section with the following paragraphs:

The contractor shall complete any and all work related to the installation of the 2 water pipelines, shown within the temporary and permanent easements granted to the City from TMT South Bay Business Park (see AGREEMENT FOR CONVEYANCE OF PROPERTY), no later than 75 calendar days subsequent to the Commencement date. Should the Contractor not complete any and all work on or before the 75th day, it will be assessed a penalty of $750 for each consecutive calendar day.

The Contractor shall complete any and all work related to the installation of casings and/or pipelines crossing under BNSF railways (mainline and spur) on or before Wednesday, April 28, 2010. Should the Contractor not complete any and all work on or before April 28, 2010, it will be assessed a penalty of $10,000.

The City will deduct any penalty from payments due to the Contractor.

6-11 SEQUENCE OF CONSTRUCTION

1. Contractor shall notify BNSF Roadmaster of commencement of construction on BNSF property in accordance with Section 11(a) of the BNSF Railway Pipeline License,
2. <u>LACSD Sewer & City Sewer</u>
    a. Refer to plan sheet SS-102 for construction sequence of sewers
    b. Contractor shall coordinate with the Engineer and ExxonMobil for the relocation of private oil pipelines.
3. <u>California Water Service Co, & City of Torrance Water Pipelines</u>
    a. Contractor shall notify TMT South Bay Business Park of commencement of construction on TMT property in accordance with Section 3.2B of the Agreement for <u>Conveyance of Property</u>,
    b. <u>Contractor shall notify Don Beckermann with</u> MCImetro Access Transmission Services at <u>(626) 666-3526</u> two (2) weeks prior to commencement of construction across <u>BNSF Railway property.</u>

SECTION 7 - RESPONSIBILITIES OF THE CONTRACTOR

7-2 LABOR

Add the following subsections:

7-2.3 Payrolls and Payroll Records

Any payroll and payroll records required for this project shall be submitted, for each week in which any contract work is performed, to the Engineer. A retention of $5,000 per report per pay period will be withheld from a progress payment for a late or missing report. A report shall be deemed as late or missing when not submitted to the Engineer within 10 calendar days from the close of the pay period for which the report applies. In addition, a non-refundable deduction of $100 per report per day will be deducted from payments due the Contractor for each late or missing report. The $100 non-refundable deduction per day will be incurred beginning on the first day the report is late or missing.

7-3 LIABILITY INSURANCE

Delete the entire section and refer to Section K: Insurance on page B-4 of these Specifications. The cost of Insurance shall be included in the Bid.

Add the following:

The Contractor must include all subcontractors as insureds under its policies or must furnish separate certificates and endorsements for each subcontractor.

7-4 WORKER'S COMPENSATION INSURANCE

Add the following after the first sentence of the second paragraph:

Worker's Compensation Insurance shall be with limits as required by the State of California and Employer's Liability with limits of $1,000,000 per accident.

7-5 PERMITS

Delete the second paragraph

Add the following subsections:

7-5.1 The City has obtained tunnel classifications and applicable permits for the casing installment at the railroad crossings from the California Division of Occupational Safety and Health (DOSH), Mining and Tunneling Unit. Refer to Appendix XX for Underground Classification.

7-5.2 Section 6500, 6501 and 6502 of the California Labor Code require that certain activities, which by their nature involve substantial risk of injury, may not be performed without a permit issued by Department of Occupational Safety and Health. The Contractor shall complete and fax the Activity Form for Buildings/Structures, Scaffolding/Falsework, Demolition, Trenches/ Excavations to the nearest Department of Occupational Safety and Health, Cal/OSHA Enforcement District Office in accordance with Title 8 of the California Code of Regulations, Section 341.1.(h). Refer to Appendix V for Activity Form.

7-5.3 Payment

An Allowance is included in the Bid Contract price for non-standard or additional PERMITS AND FEES. Contractor will be paid for obtaining Permits for specific activities. The amount that shall

be paid to the Contractor shall be the actual permit and inspection fees paid with no mark-up or extra costs, except the Contractor shall be solely responsible for any fee charged to re-inspect rejected or incomplete work.

7-6 THE CONTRACTOR'S REPRESENTATIVE

Add a third paragraph to the section stating the following:

The Contractor's Representative shall be approved by the CITY prior to the start of the Work. If the designated representative is rejected, the Contractor shall immediately designate another representative in writing and submit to the City for consideration. The CITY shall have the authority to require the Contractor to remove its representative and/or alternate representative at any time and at no cost to the CITY.

7-8 PROJECT SITE MAINTENANCE.

7-8.5 Temporary Light, Power, and Water. Add the following:

The Contractor shall obtain a construction water meter from the CITY by calling Torrance Customer Service Operations ("CSO") at (310) 921-6449. A $1,000 deposit is required and refundable upon return of the meter in good working condition. The Contractor shall pay for the water used, at the CITY's current water rates.

Some water mains in Torrance are owned/operated by California Water Service. For rental of a hydrant meter the contractor shall call California Water Service at (310) 257-1400.

7-8.6 Water Pollution Control. Add the following subsections:

7-8.6.1 NPDES General Permit, Notice of Intent (NOI) and Notice of Termination (NOT). Construction activities including clearing, grading and excavating that result in land disturbances of equal to or greater than one acre are covered by the National Pollutant Discharge Elimination System General Permit No CAS000002 (General Permit).

Construction activities for Small Linear Underground Projects (Small LUP) including clearing, grading and excavating that result in land disturbances greater than once acre and less than five acres are covered by the National Pollutant Discharge Elimination System General Permit No. CAS000005. Small LUP have been categorized into Tier I and Tier II. Tier I Small LUP typically do not have a high potential to impact storm water quality because they are constructed over a short period of time and not typically during a rain event. Tier II Small LUP have a higher potential to impact storm water quality because they (a) occur outside urban areas; (b) have larger areas of soil disturbance that are not closed by the end of day; (c) have on-site stockpiles of soil; (d) they occur in close proximity to sensitive resources which may include steep topography and/or waterbodies; and (e) have larger areas of disturbed soils exposed for longer time before final clean up.

A copy of the General Permit and Notice of Intent are included in Appendix IV of these Specifications/Special Provisions.

This General Permit regulates pollutants in discharges of storm water associated with construction activity. To obtain authorization for proposed storm water discharges, pursuant to this General Permit, the Contractor must prepare a Notice of Intent (NOI) with a vicinity map and appropriate fee for submittal by the City to the State Regional Water Quality Control Board (SWQCB). The City shall sign the NOI, and the Contractor shall provide the check for the fee. Coverage under the General Permit shall not occur until the Contractor develops a Storm Water

Pollution Prevention Plan (SWPPP), the SWPPP is approved by the City, and the NOI with map and fee are submitted to the SWQCB. The Contractor shall terminate coverage under the General Permit for a complete project by preparing a Notice of Termination (NOT) for the City to sign and submit to the Regional Water Quality Control Board (RWQCB) and when post construction storm water Best Management Practices (BMPs) are in place.

Full compensation for preparation of the NOI, NOT, vicinity map, required fees, construction, and post construction BMPs, sampling and analysis as required by the RWQCB and all other related costs shall be considered as included in the bid for NPDES COMPLIANCE.

7-8.6.2 Storm Water Pollution Prevention Plan (SWPPP).

Construction activities covered by the General Permit require submittal by the Contractor of a Storm Water Pollution Prevention Plan (SWPPP) prior to the start of any clearing, demolition, grading or excavation. A Storm Water Pollution Prevention Plan (SWPPP) shall be defined as a report that includes site map(s), identification of construction and contractor activities that could pollute storm water, and a description of measures and practices to control the potential pollutants. The preparation and implementation of the SWPPP is intended to ensure that the Contractor will make every reasonable effort to prevent the pollution of water resources during the period of construction. The size and nature of this Contract place it under the regulations of the National Pollutant Discharge Elimination System (NPDES) General Permit for Storm Water Discharge Associated with Construction Activity. In the State of California, these regulations are adopted by the State Water Resources Control Board. These regulations require a SWPPP for any work where clearing, grading, and excavation result in a land disturbance of one or more acres. As a result, the Contractor shall prepare, submit to the CITY for review and approval, and implement a SWPPP for this Contract in compliance with these regulations.

The handbooks specified in 7-8.6.3 shall be followed and adhered to in preparing the SWPPP. The SWPPP shall be prepared under the supervision of, and signed by, a Civil Engineer registered by the State of California. The SWPPP shall include and incorporate BMPs that address contractor activities, erosion, and sedimentation control. The SWPPP shall also include and incorporate appropriate BMPs for run-off generated by construction activities and other non-storm water sources. During all periods of construction, excavated soils which are stored on-site shall be completely covered with waterproof material and sand (or gravel) bagged or bermed in order that, in the event of a storm, no soil becomes mixed with or transported by storm water run-off.

If, during construction operations, field conditions change in a manner which, in the opinion of the Engineer, significantly deviates from how the SWPPP, as approved by the CITY, addressed the current construction operation, the Engineer may direct the Contractor to revise the current construction operation and/or the SWPPP. Such directions will be made in writing and will specify the items of work for which the SWPPP is inadequate. No further work on these items will be permitted until the Contractor revises the construction operations to the satisfaction of the Engineer and/or until the Contractor submits a revised SWPPP and receives CITY approval. The Engineer will notify the Contractor of the acceptance or rejection of the revised SWPPP within seven (7) working days from the date of submittal.

The SWPPP shall be submitted to the CITY for review and approval a minimum of fifteen (15) working days prior to the commencement of construction operations in accordance with 6-1 of these Special Provisions. The SWPPP shall remain on the construction site while site is under construction, during working hours, commencing with the initial construction activity and ending with Notice of Termination.

Full compensation for preparation of the SWPPP, revisions to the SWPPP, and all other related costs shall be considered as included in the lump sum bid price for STORM WATER POLLUTION PREVENTION.

7-8.6.3 Best Management Practices. Best Management Practices (BMPs) shall be defined as any program, technology, process, siting criteria, operating method, measure, or device which controls, prevents, removes, or reduces pollution. The Contractor shall obtain and refer to the California Storm Water Best Management Practice Handbooks, Volume 3 Construction BMP Handbook and the Los Angeles County Department of Public Works Best Management Practices Handbook for Construction Activities. These publications are available from:

Los Angeles County
Department of Public Works
Cashier's Office
900 S. Fremont Avenue
Alhambra, CA 91803
Telephone (626) 458-6959

The Contractor shall have a minimum of two (2) readily accessible copies of each publication on the Work site at all times.

The CITY, as a Permitee, is subject to enforcement actions by the State Water Resources Control Board, the Environmental Protection Agency and private citizens.

The CITY may assess the Contractor a penalty of $1,000 for each calendar day that the Contractor has not fully implemented the appropriate BMPs and/or is otherwise in noncompliance with these provisions. In addition, the CITY will deduct, from the final payment due the Contractor, the total amount of any fines levied on the CITY, plus legal and staff costs, as a result of the Contractor's lack of compliance with these provisions and/or less than complete implementation of the appropriate BMPs.

Full compensation for the implementation of BMPs, including the construction, removal, and the furnishing of all necessary labor, equipment, and materials, shall be considered as included in the price bid for the various items of work.

7-8.6.4 Payment Full compensation for implementation and maintenance of BMPs, including the construction, removal, and the furnishing of all necessary labor, equipment, and materials, shall be considered as included in the lump sum price bid for the STORM WATER POLLUTION PREVENTION.

7-8.8 Contractor's Storage Yard. The Contractor shall be responsible for obtaining a storage yard for the duration of the work. If the proposed location of the yard is located within the boundaries of the CITY, the Contractor shall obtain prior approval from the Engineer.

7-9 PROTECTION AND RESTORATION OF EXISTING IMPROVEMENTS

Add the following paragraph:

The Contractor shall be responsible to protect all new concrete work from being etched, scratched or otherwise marked or having wet slough material deposited thereon. If new concrete work is marked, the Contractor shall replace it at its expense in accordance with 303-5.7 of these special provisions.

Add the following subsections:

7-9.1 Replacement of Plantings. The Contractor shall be responsible to replace any lawn or plant damaged by Contractor's operations, at its expense, to the satisfaction of the Engineer.

7-9.2 Replacement of Sprinkler Systems. Damaged sprinklers shall be replaced so that the area watered by the original system is watered by the reconstructed system without undue waste of water. Any additional material or work required to obtain said adequate coverage shall be furnished by the Contractor, at its expense.

7-9.3 Trees. The Contractor shall exercise all necessary precautions so as not to damage or destroy any trees or shrubs not designated for removal and shall not trim or remove any trees unless such trees have been approved for trimming or removal by the Engineer. Tree trimming and replacement shall be accomplished in accordance with the following requirements

(a) Trimming. Symmetry of the tree shall be preserved; no stubs, splits torn branches or torn roots left; clean cuts to be made close to trunk or large branch. Spikes shall not be used for climbing live trees. All cuts over one and one-half inches in diameter shall be coated with a suitable tree wound paint as approved by the Engineer.

(b) Replacement. The Contractor shall immediately notify the Engineer if any tree not designated for removal is damaged by its operations. If, in the opinion of the Engineer, the damage is such that replacement is necessary, the Contractor shall replace the tree at its own expense. The tree shall be of a like variety as the tree damaged, subject to the approval of the Engineer. The size of the tree shall be minimum 24" box size.

7-10 PUBLIC CONVENIENCE AND SAFETY

7-10.1 Traffic and Access. Add the following before the last paragraph:

The Contractor shall provide the necessary measures to prevent public access to private property during removal and replacement of fences.

Replace the fourth paragraph with the following:

Vehicular access to driveways shall be maintained to the properties. Add the following before the last paragraph:

Unless the Contractor makes other arrangements satisfactory to the owners, the Contractor shall provide vehicular access to all establishments requiring such access for receiving or delivering materials or supplies.

At least (3) days prior to starting work at any location, the Contractor shall distribute written notices to businesses that will be impacted by the work. The City will provide the notice.

Should any change in these requirements be necessitated by extraordinary occurrences or requirements during the execution of the work, the Contractor shall obtain prior written approval of the Engineer.

Add the following subsections:

7-10.1.3 Temporary Pavement Markings. When permanent pavement markings that are deemed by the Engineer as needed and can not be permanently restored by the end of the work

shift in which they were obliterated, the Contractor shall provide temporary markings prior to leaving the Work site. All temporary pavement markings and signs shall be maintained, or replaced as necessary by the Contractor, until permanent pavement markings are restored.

The Contractor shall permanently restore, in-kind, at the completion of work in the affected areas all striping and markings for parking spaces on the TMT South Bay Business Park and DOW Chemical properties.

7-10.1.5 Temporary "No Parking" Signs. The Contractor is responsible to post "Temporary No Parking" signs at least forty-eight (48) hours (two work days) in advance of the first date of enforcement. Each sign must include the beginning and end dates and the hours in effect (if not 24 hours/day), if applicable "Tow-Away" and "City of Torrance" must be written on the sign face.

7-10.1.6 Payment

1. All costs associated with traffic and access shall be included in the Contract unit prices for the associated items of work for which traffic control is needed.

2. Full compensation for furnishing, placing, maintaining, and removing the temporary pavement markings/delineation shall be considered as included in the Contract unit prices for the associated items of work for which it is needed.

3. Full compensation for furnishing, placing, maintaining and removing temporary signs shall be considered as included in the Contract unit prices for the associated items of work for which it is needed.

7-10.3 Street Closures, Detours, Barricades.

Add the following paragraph after the first paragraph:

In addition to the requirements of this subsection, the Contractor shall conform to the requirements for barricades as stipulated in the Special Provisions. However, deviations from the requirements stipulated in the Special Provisions may be permitted upon approval of the Engineer.

Add the following:

The Contractor shall install, maintain, and remove all temporary delineators, barricades, fencing, lights, warning signs and other devices necessary to control traffic as specified in the project plans and these specifications. Materials for a temporary facility may be provided from new or used materials. If used materials are provided, they shall be sound, in good condition and otherwise meet the requirements of new materials. All traffic control devices shall be free of graffiti, and the Contractor shall be responsible to immediately clean and/or replace any device to the satisfaction of the Engineer.

7-10.3.1 Payment

Full compensation for furnishing, installing, maintaining and removing the above traffic control devices shall be considered as included in the Contract unit prices for the associated items of work for which it is needed.

Revise the final sentence of the third paragraph to include:

Except as modified hereinafter or within the Special Provisions.

Add the following paragraph after the third paragraph:

The Contractor shall conform to Section 74.6.8 of the Torrance Municipal Code. In addition, the Contractor shall comply with directions from the Engineer to provide protection at excavations,

trenches and/or other potentially hazardous construction areas. The Contractor shall be required to erect temporary six-foot high chain link fences, or equivalent protection, to completely enclose all open excavations over three feet (3') in depth. Fencing shall be approved by the Engineer, and provide adequate security. Fencing may be removed during working hours to the extent necessary to provide access and working room, in which case the Contractor shall provide equivalent security, to the satisfaction of the Engineer, during said periods. Any excavation not secured to the satisfaction of the Engineer shall be completely backfilled prior to the end of each day's construction activities. The Engineer may require additional security devices, lighting or other protection in addition to said fencing. Full compensation for furnishing, placing and removing temporary protection shall be considered as included in the price for the linear foot of pipeline and steel casing as referenced in Sections 306-1.6.3 and 306-2.6 of these Special Provisions.

Add the following subsection:

7-10.4.5 Health & Safety Plan

See Sections 4 to 9 of the Soil Management Plan in Appendix XXI for requirements for the Health and Safety Plan (HASP). The HASP shall include a Sampling and Analysis Plan (SAP) section and a Community Health and Safety Plan (CHSP) section, see Soil Management Plan for requirements.

In compliance with Section 8(b) of BNSF Railway's Pipeline License, Contractor shall complete the safety-training program at the following Internet Website http://www.contractororientation.com

The Health & Safety Plan, including SAP & CHSP, shall be submitted to the CITY and ExxonMobil for review and approval a minimum of twenty (20) working days prior to the commencement of construction operations in accordance with 6-1 of these Special Provisions.

Full compensation for the completion of the safety-training program, preparation of the HASP (including SAP & CHSP), and implementation of HASP shall be considered as included in the lump sum price bid for the HEALTH & SAFETY PLAN.

Add the following subsection:

7-16 RAILWAY RIGHTS-OF-WAY

7-16.1 Railroad Operations

Railroad tracks within and adjacent to the Harbor Subdivision rights-of-way (ROW), including the Aluminum Spur are active and will be in use during construction of this project, unless otherwise indicated. The ROW is jointly owned by the BNSF Railway Company (BNSF) and the Los Angeles County Metropolitan Transportation Authority (LACMTA) and operated by BNSF. References in this section are included in Appendices X and XI.

1. Contractor shall coordinate its activities with BNSF. Work involving tracks or work adjacent to any of these tracks will be governed by the rules of BNSF and other regulatory Agencies, in compliance with the terms and conditions or Exhibit C "Contractor Requirements California" and the Pipeline Licenses.

2. Contractor shall submit work plans and procedures for all work within the vicinity of operational tracks that may impact rail operations, in accordance with Exhibits C and the Pipeline Licenses.

Railroad traffic and operations are continuously occurring throughout the day and night on these tracks. The Contractor shall coordinate and schedule Work so the construction activities do not interfere with Railroad operations, in accordance with Exhibits C and the Pipeline Licenses.

The Contractor shall be responsible for becoming familiar with the train activity on these tracks in order to plan and perform the work.

7-16.2 Payment

There shall be no extra payment for coordination with BNSF or LACMTA. Full compensation for coordination shall be considered as included in the Contract unit prices for the associated items of work for which it is needed.

SECTION 9 - MEASUREMENT AND PAYMENT

9-1 MEASUREMENT OF QUANTITIES FOR UNIT PRICE WORK

Add the following sections:

9-1.2.1 Payment for Labor and Materials.

The Contractor shall pay and cause the subcontractors to pay any and all accounts for labor, including Worker's Compensation premiums, State Unemployment and Federal Social Security payments and all other wage and salary deductions required by law. The Contractor also shall pay and cause the subcontractors to pay any and all accounts for services, equipment and materials used by it and the subcontractors during the performance of work under this contract. All such accounts shall be paid as they become due and payable. If requested by the Engineer, the Contractor shall immediately furnish the City with proof of payment of such accounts.

9-1.2.2 Measurement and Payment

Payment of each item will include full compensation for furnishing all labor, materials, tools, equipment and backup equipment; transportation and technical competence for performing all work necessary to complete each item as indicated on the plans and as specified in these Contract Documents, including but not limited to obtaining all applicable certifications necessary for specialty personnel and major equipment in conformance with Subsection 7-5, and all other applicable permits; securing a storage yard to store all equipment and materials to be used on the job, disposal of waste materials, restoration of the site, etc. The storage yard may also to be used as a temporary storage for excavated materials, and traffic control items. Costs for mobilization/demobilization shall be included in the unit prices bid for each work item.

9-2 LUMP SUM WORK

Replace the second paragraph with the following:

The Contractor shall, within five (5) working days of receipt of a request from the Engineer, submit a complete breakdown of lump sum bid prices showing the value assigned to each part of the work, including an allowance for profit and overhead. In submitting the breakdown, the Contractor certifies that it is not unbalanced and that the value assigned to each part of the work represents its estimate of the actual cost, including profit and overhead, of performing that part of the work. The breakdown shall be sufficiently detailed to permit its use by the Engineer as one of the bases for evaluating requests for payment. No extra costs shall be allowed for providing these breakdowns.

9-3 PAYMENT

9-3.2 Partial and Final Payment. Replace the third paragraph with the following:

For each progress estimate, 10 percent will be deducted and retained by the CITY, and the remainder less the amount of all previous payments will be paid. In addition 125% of the amount of outstanding "Stop Notices" shall be withheld.

Add the following:

The Contractor shall submit all requests for payment on a Progress Payment Invoice.

Prior to submittal of said invoice, all items for which payment is requested shall be checked and approved in writing by the Engineer. No payments will be made unless all back-up data is submitted with the payment request and the Progress Payment Invoice is signed by both Contractor and Engineer.

9-3.4 Mobilization. Replace the entire subsection with the following:

Mobilization shall include the provisions of the Construction Schedule, Emergency Response Plan; site review; obtaining all permits, insurance, and bonds; moving onto the site all plant and equipment; furnishing and erecting plants, temporary buildings, and other construction facilities, and removal of same at completion of the Work; and other work, all as required for the proper performance and completion of the Work.

Mobilization shall include, but not be limited to, the following items:

(a) Submittal and modification, as required, of the Construction Schedule.

(b) Moving on to the site of all Contractor's plant and equipment required for the first month's operations.

(c) Installing temporary construction power and wiring.

(d) Establishing fire protection system.

(e) Developing construction water supply.

(f) Providing on-site sanitary facilities and portable water facilities, as required.

(g) Arranging for and erection of Contractor's work and storage yard.

(h) Submittal of all required insurance certificates and bonds, including subcontractors.

(i) Obtaining all Contractor required permits.

(j) Posting all OSHA required notices and establishment of safety programs.

(k) Potholing and other research and review as necessary to verify site conditions and utility locations

(l) Having the Contractor's Superintendent present at the job site full-time.

(m) Removal, cleanup, and restoration

9-3.4.1 Payment

Payment for MOBILIZATION will be made on a lump sum basis.

9-3.5 Noncompliance with Plans and Specifications. Add the following section:

Failure of the Contractor to comply with any requirement of the Plans and Specifications, and/or to immediately remedy any such noncompliance upon notice from the Engineer, may result in suspension of Contract Progress Payments. Any Progress Payments so suspended shall remain in suspension until the Contractor's operations and/or submittals are brought into compliance to the satisfaction of the Engineer. No additional compensation shall be allowed as a result of suspension of Progress Payments due to noncompliance with the plans or specifications. The Contractor shall not be permitted to stop work due to said suspension of Progress Payments.

9-4 CLAIMS

The Contractor shall not be entitled to the payment of any additional compensation for any cause, including any act, or failure to act, by the CITY, or the happening of any event, thing or occurrence, unless the Contractor shall have given the CITY due written notice of potential claim as hereinafter specified.

The written notice of potential claim shall set forth the reasons for which the Contractor believes additional compensation will or may be due, the nature of the costs involved, and, insofar as possible, the amount of the potential claim. Said notice shall be submitted on a form approved by the CITY at least forty-eight (48) hours (two working days) in advance of performing said work, unless the work is of an emergency nature, in which case the Contractor shall notify and obtain approval from the Engineer prior to commencing the work. The Engineer may require the Contractor to delay construction involving the claim, but no other work shall be delayed, and the Contractor shall not be allowed additional costs for any said delay but may be allowed an extension of time if the Engineer agrees that the work delayed is a controlling element of the Construction Schedule. The Contractor shall be required to submit any supporting data (or a detailed written explanation justifying further delay) within five (5) work days of a request from the Engineer and shall be responsible for all costs associated with any delays resulting from late and/or incomplete submittals. By submitting a Bid, the Contractor hereby agrees that this subsection shall supersede 6-6.3 and 6-6.4 of the Standard Specifications.

It is the intention of this subsection that differences between the parties arising under and by virtue of the Contract be brought to the attention of the Engineer at the earliest possible time in order that such matters may be settled, if possible, or other appropriate action promptly taken. The Contractor hereby agrees that it shall have no right to additional compensation for any claim that may be based on any such act, failure to act, event, thing or occurrence for which no written notice of potential claim as herein required was timely filed.

PART 2 - CONSTRUCTION MATERIALS

SECTION 200 – ROCK MATERIALS

200-2 UNTREATED BASE MATERIALS

200-2.1 General. Replace the entire subsection with the following:

Untreated base for pavement, curb, gutter, cross gutters, hardscape and other improvements shall be crushed miscellaneous base conforming to 200-2.4.

SECTION 203 – BITUMINOUS MATERIALS

203-6 ASPHALT CONCRETE

203-6.1 General. Add the following:

Asphalt concrete shall be Type Class B-PG-64-10 for base courses and C2-PG-64-10 for surface courses.

SECTION 207 – PIPE

207-1 NONREINFORCED CONCRETE PIPE.

207-1.1 General. Add the following as the last paragraph:

Where non-reinforced concrete pipe is specified on the Plans, the Contractor shall have the option of using reinforced concrete pipe with an equivalent D-load at no extra charge. The Contractor shall have the option of using either bell and spigot or tongue and groove pipe.

207-9 IRON PIPE AND FITTINGS

207-9.2 Ductile Iron Pipe for Water and Other Liquids.

207-9.2.1 General. Replace the last paragraph with the following:

Ductile iron pipe (DIP) shall comply with AWWA C150 and C151. Unless otherwise specified on the Plans or Specifications, the minimum pipe wall thickness shall be equal to Pressure Class 350.

207-9.2.2 Pipe Joints. Replace the entire subsection with the following:

Unless otherwise specified on the Plans or Specifications, all pipe joints shall be ductile iron and shall comply with the requirements of Table 207-9.2.2 (A) of these Special Provisions. Pipe joints shall be rated for a working pressure of 350 psig.

TABLE 207-9.2.2 (A)

Type of Joint	Specifications
Rubber Gasket Push-on Joint	AWWA C111
Mechanical Joint	AWWA C111
Flanged Joint	AWWA C153 or C110
Flanged Joint (Threaded Flanges)	AWWA C115
Restrained Joint	ANSI / AWWA CIII / A21.11

Gaskets shall be 1/8-inch thick and made of styrene butadiene rubber (SBR). Gaskets shall conform to AWWA C111 and 208-1.2. Flange gaskets shall be full-face, with bolt holes pre-punched and rated for 350 psi working pressure.

Flange assembly bolts shall be square head machine bolts conforming to ANSI/ASME B18.2.1 with heavy hexagon nuts conforming to ANSI/ASME B18.2.2. Bolts and nuts shall be threaded according to ANSI/ASME B1.1, course thread series, Class 2 fit. Bolt length shall be such that after joints are made up, the bolts shall protrude through the nut by no more than ½-inch. Bolts for use in buried installations shall be stainless steel Type 316. Bolts for use in submerged installations shall be stainless steel Type 304.

207-9.2.2.1 Restrained Joints. Add the following subsection:

Restrained joints for piping 6 inches and larger shall be American Cast Iron Pipe Company "MJ Coupled Joint," "Lok-Ring" or "Flex-Ring," U.S. Pipe "TR-Flex," or equal. All weldments for restrained joints shall be tested by the liquid penetrant method per ASTM E 165. The CalWater 18" line shall use restrained joint U.S. Pipe "Field-Lok" gaskets at fittings and tie-ins, when indicated on drawings, and be installed per manufacturer's recommendations. Use of restrained joints shall be used on the pipe runs on both sides of the fittings per the DIPRA Thrust Restraint Design recommendations.

Alternatively, restrained joints in 12-inch diameter and smaller buried piping shall be American Cast Iron Pipe Company "Fast-Grip," U.S. Pipe "Field-lok" gasket within Tyton joint pipe and fittings, or equal. Joint restraint shall be certified to four times rated pressure of 200 psi by Factory Mutual.

207-9.2.3 Fittings. Replace the entire subsection with the following:

Unless otherwise specified on the Plans and Specifications, all fittings shall be ductile iron and manufactured in accordance with AWWA C153 or C110. Fittings shall be furnished with restrained joints or thrust blocked and anchored in accordance with City of Torrance Standard Plan No. T713-1. Fittings shall have a minimum pressure rating of 350 psig working pressure. Restrained joint fittings shall be used on the 24" City of Torrance line where noted. The 18" CalWater line shall use restraint joint fittings.

Sleeve-type couplings shall be MJ x MJ, 12-inches minimum length and rated 350 psig working pressure. Romac type sleeves may be used where approved by the Engineer.

Special fittings are not allowed without the prior written approval from the Engineer.

Rubber gaskets, bolts and nuts shall conform to 207-9.2.2 of these Special Provisions.

207-9.2.4 Lining and Coating. Add the following:

Cement for mortar lining shall be Type II or V. Fly ash or pozzolan shall not be used as a cement replacement.

Fittings lined and/or coated in the field will not be accepted as conforming to AWWA C104, C151, or C153.

The exterior surfaces of ductile iron pipe, fittings, valves and appurtenances that will be exposed to the atmosphere inside structure or above ground shall be thoroughly cleaned and painted with a rust-inhibitive primer conforming to the requirements of 210-1.8 of these Special Provisions.

207-9.2.6 Polyethylene Encasement for External Corrosion Protection. Replace the entire subsection with the following:

All ductile iron pipes, fittings, valves and appurtenances shall be wrapped with 8 mil. polyethylene film. The polyethylene film shall be pulled snugly around the pipes, fittings, valves and appurtenances and held in place with a 2-inch wide polyethylene adhesive tape in accordance with AWWA C105 Method A.

SECTION 210 – PAINT AND PROTECTIVE COATINGS

210-1 PAINT

Add the following subsections:

210-1.8. Paint for Exterior Surfaces of Ductile Iron Pipe. The exterior surfaces of ductile iron pipe, fittings, valves and appurtenances that will be exposed to the atmosphere inside structure or above ground shall be painted with three coats of “Rustoleum No. 7773” or approved equal. The final coat color shall be selected by Engineer or identified on plans. Total thickness of coating shall be 6 mils.

210-1.9 Coating for Valves. Except as otherwise provided, all ferrous surfaces (excluding non-corrosive surfaces) in water passages of all valves 4-inches and larger shall be fuse coated with an epoxy coating in accordance with the "Standard for Protective Epoxy Interior Coatings for Valves and Hydrants" (AWWA C550).

210-1.12 Concrete Vaults and Manholes. The interior and exterior of concrete vaults and manholes shall be coated with crystalline waterproofing. Crystalline waterproofing shall be cementitious coating containing components that will diffuse into the concrete by water, react with lime, and create an impervious, waterproof, calcified barrier in the substrate. Technical requirements are as follows:

1) Permeability at 2.6×10^{-8} cm/sec (2 coats) minimum per Army (COE CRD-C 48-55 or CRD-6 48-73.

2) Compatibility; shall produce no degradation of substrate.

SECTION 212 – LANDSCAPE AND IRRIGATION MATERIALS

212-1 LANDSCAPE MATERIALS

Add the following:

Plant materials specified in this section shall conform to the applicable requirements of ANSI Standard Z60.1-1980, " Nursery Stock," and to the rules and grading provisions adopted by the American Association of Nurserymen, Inc.

212-1.4 Plants.

212-1.4.2 Trees. Add the following:

Tree shall be a 24" box crepe myrtle. There shall be one tree installed for this project and on the TMT South Bay Business Property.

212-1.5 Headers, Stakes, and Ties.

212-1.5.3 Tree Stakes. Replace the first paragraph with the following:

Tree stakes shall be either 2-inch diameter lodge pole pine, treated with copper nanthanate or pressure treated with chromated copper arsenate, City of Torrance Standard Plan No. T401.

Add the following:

Tree ties shall be a commercially manufactured tie, split plastic hose with a minimum length of twenty inches (20"). Split plastic hose ties shall be "Cinch-tie" by V.I.T. or approved equal.

Add the following section:

SECTION 215 – MISCELLANEOUS POTABLE WATER DISTRIBUTION SYSTEM MATERIALS

215-1 VALVES

215-1.1 General. All valves and gates shall be new and of recent manufacture. The flanges shall be plain faced and shall conform in dimensions and drilling to ANSI B16.1 Class 125 or ANSI/AWWA C153. Each valve body shall be tested to a pressure equal to twice its design water working pressure, except that gate valves shall be tested in accordance with the requirements of AWWA C500.

All interior parts of valves manufactured of bronze or brass except valve stems, shall conform to the requirements of ASTM B62. Gate valve stems shall be of bronze, containing not more than 5 percent of zinc, not more than 2 percent of aluminum, and having a minimum tensile strength of 60,000 psi, a yield strength of 40,000 psi, and elongation of at least 10 percent in two inches, as determined from a test coupon poured from the same ladle from which the valve stems to be furnished are poured.

Except as otherwise provided, all ferrous surfaces (excluding non-corrosive surfaces) in the water passages of all valves, 4 inch and larger, shall be fuse coated with an epoxy coating in accordance with AWWA C550. All buried valves shall be provided with an exterior protective coating.

Unless otherwise shown on the Plans, all in-line valves shall be furnished with mechanical ends.

215-1.2 Resilient-Seated Gate Valves. Gate valves, size 3 inches through 12 inches, shall be resilient seat, solid wedge, non-rising stem type equipped with "O" ring seals and conforming to AWWA C509. Gate valves shall be rated for 250 psi working pressure.

Valves shall have a 2-inch square operating nut or hand wheel, as shown on the Plans, and shall open with a counter-clockwise rotation of the operator.

Gate valves shall be Mueller A-2360 to match pipe size with flanged or mechanical ends.

215-1.3 Butterfly Valves. Butterfly valves, size 16-inches or larger, shall conform to the requirements of AWWA C504. Butterfly valves shall be rated for 250 psi working pressure and flanged end. Flange valves may be either short-bodied or long-bodied. Shaft seals shall be designed for use with standard split-V type packing.

Valves shall be protectively coated. Exterior surfaces shall be coated for buried service in accordance with Section 4.2 of AWWA C504. All interior ferrous surfaces, including contiguous flange faces shall be protectively coated in accordance with 210-1.10 of these Special Provisions.

Valves shall have a 2-inch square operating nut or hand wheel, as shown on the Plans, and shall be provided with water tight gear housing. The operating torque rating shall conform to Table 4 of the above referenced AWWA Standard for the pressure classification shown or specified.

All buried butterfly valves shall have, inserted in the valve can on top of the operating nut or extension stem, a butterfly valve Indicator Post and Tag, with a stainless steel data plate listing the following information: Valve manufacturer, size, date (month & year) installed, direction, and number of turns to open.

The following named valves are acceptable when manufactured in accordance with these Special Provisions:

"Mueller Company", "Clow Corporation", or approved equal.

215-1.4 Tapping Sleeves and Valves. Tapping sleeves shall be of ductile iron pipe or stainless steel specifically designed to withstand the strains and vibrations of the tapping machine. The tapping sleeve shall have gaskets at each end of the sleeve. Sleeves with only an O-ring around the tapped hole are not approved. Tapping sleeves shall be Mueller and shall be rated for 200 psi working pressure.

Tapping valves shall meet all of the requirements of 215-1.2 of these Special Provisions, with the exception of items such as oversized seat rings to allow entry of the tapping machine cutter.

215-1.7 Pressure Relief Control Valves. Pressure Relief Control Valves shall be designed to provide protection for the system against high-pressure surges when pumps are shut down. Pressure Relief Control Valves relieve the excess pressure. Closing speed shall be adjustable to help eliminate surges.

Pressure Relief Control Valves shall be hydraulically operated, diaphragm actuated in globe or angle pattern. Valves shall maintain a constant upstream pressure to close tolerances. The main valve body and cover shall be made from 300 series stainless steel. It shall contain a resilient synthetic rubber disc having a rectangular cross section, contained on three and one-half sides by a disc retainer. The seat ring shall be held in place by threads or bolts and not pressed into the body. The diaphragm assembly shall be guided at both ends by a bearing in the valve cover and

an integral bearing in the valve seat. The diaphragm assembly shall be the only moving part. The diaphragm shall consist of a nylon fabric reinforced BUNA-N rubber and shall not be used as a seating surface. All necessary repairs shall be possible without removing the valve from the line.

All main valve interior components shall be manufactured from non-corrosive materials.

The pilot valve shall be adjustable, bronze bodied, direct acting, spring loaded and normally closed. The relief pilot shall be supplied with a stainless steel seat ring.

Pressure Relief Control Valves shall maintain a constant inlet pressure by relieving excess pressure downstream. When in a relief application, the valve shall be located on a tee off the main line. The valve will open when the line pressure exceeds the set point of the pilot. When in a sustaining application, the valve shall be located on the main line. The valve will open when the main line pressure exceeds the pilot set point. The pilot will cause the main valve to modulate toward the closed position as the line pressure approaches the pilot set point.

When a check feature is added and a pressure reversal occurs, the downstream pressure is directed to the main valve cover chamber closing the valve to prevent return flow.

The valve shall be as manufactured by "AMES Company, Inc.," or approved equal.

215-1.8 Miscellaneous Small Valves. Miscellaneous small valves shall be as specified in the Plans or Specifications. Where not specifically labeled, valves smaller than 3-inch shall be lever-operated ball valves, as manufactured by The James Jones Company or approved equal.

215-1.9 Air and Vacuum Release Valves. Air and vacuum release valves shall be cast-iron body valves with bronze trim and stainless steel float. They shall be APCO No. 144 Air and Vacuum Release Valves as manufactured by Valve and Primer Corporation, Chicago, Illinois, or approved equal. Air and vacuum release valve assembly shall include the service line, ball valve and other appurtenances to comply with City of Torrance Standard Plan No. T708-2.

215-1.10 Corporation Stop. The bronze corporation stops and accessories shall be as manufactured by The James Jones Company and as shown on City of Torrance Standard Plan No. T702-1.

215-1.11 Valve Boxes. Valve boxes shall be in accordance with City of Torrance Standard Plan No. T712.

215-2 FIRE HYDRANTS

Fire hydrants shall be as manufactured by The James Jones Company, Model J-3700 or J-3765 as shown on the Plans and shall conform to the requirements of AWWA C503. Each fire hydrant shall be assembled with a gray-iron 6-inch nominal diameter hydrant extension with break-away grooves and flanged ends, and a gray-iron 6-inch nominal diameter hydrant bury with top end flanged and bottom end having a mechanical joint connection. Flanges shall be 6-hole pattern. The hydrant flange shall be connected to the extension by means of breakaway bolts in accordance with AWWA C110.

215-3 BLOW-OFF HYDRANTS

Blow-off hydrants shall be as manufactured by The John C. Kupferle Foundry Company, St. Louis, Missouri, Model Eclipse No. TF550 with 2-inch female iron pipe inlet. The Blow-off assembly shall include the 2" service line, 2" ball valve, and other appurtenances as indicated in City of Torrance Standard Plan No. T707-2 or on Cal Water Plan.

215-4 INSULATING COUPLINGS, BUSHINGS AND UNIONS

Insulating couplings, bushings and unions shall be furnished to provide dielectric protection from electrolytic corrosion at all points where piping and fittings of dissimilar metals are joined, as manufactured by Smith Blair; Corrosion Control Products, Co.; or approved equal. Couplings, bushings, and unions shall be lined with an inert, non-conductive, linen impregnated material and threaded to NPS standards, with sufficient separation between pipe ends to prevent bridging.

215-4.1 Insulating Flange Kits. Kits shall be furnished as shown on the Plans and shall consist of a dielectric gasket, insulating sleeves and washers.

a) Gaskets. Gaskets shall be Type "E" neoprene faced phenolic material for operation between 20 and 150 degrees Fahrenheit per ANSI B16.21.
b) Insulating Sleeves. Insulating sleeves shall be 1/32-inch thick, full length, CE phenolic tubing for operation between 20 and 150 degrees Fahrenheit. For installation at threaded valve flanges, the sleeves shall be half-length.
c) Insulating Washers. Insulating washers shall be laminated CE phenolic for operation at ambient temperatures to be placed directly adjacent to the flange face.

Moisture, soil, or other foreign matter must be carefully prevented from contacting any portion of the mating surfaces prior to installing insulator gasket. If moisture, soil, or other foreign matter contacts any portion of the surfaces, the entire joint shall be disassembled, cleaned with a suitable solvent, and dried prior to re-assembly.

215-5 SERVICE LATERALS

New service laterals shall be Type K soft copper and shall conform to City of Torrance Standard Plan Nos. T702-1. Sizes of service laterals to be installed are as shown on the Plans.

No joints shall be made in service lateral runs without the Engineer's approval. All joints so allowed shall be silver-solder joints.

215-6.3 Fire Service Meter Assembly. The fire service meter assembly shall measure both domestic and fire service water usage through a single water line and shall conform to the requirements of AWWA C703 modified as follows:

1) Type. Fire Service Meter assembly shall consist of a combination of an AWWA Class II in-line horizontal axis turbine for measuring high rates of flow and a positive displacement bypass meter for measuring low rates of flow. An automatic valve shall direct the flow from the bypass meter to the mainline meter as the flow rates increase and back to the bypass meter as the flow rate decreases. All components of the meter assembly shall be both UL (Underwriter's Laboratory) Listed and FM (Factory Mutual) Approved for fire service use.

2) Capacity. The capacity of the meters in terms of maximum rate for continuous use, normal operating range, maximum loss of head, and extended low flow capability is as follows:

Size	Max. Continuous Rate (gpm)	Use	Normal Operating Range (gpm)	Max Loss of Head @ Max Rate (psi)	Extended Low Flow (gpm)
6"	2,500		1-1/2 - 2,500	10.5	1
8"	4000		2 - 4,000	10.5	1

3) Size. The size of the meter shall be determined by the normal size (in inches) of the opening in the inlet and outlet flanges. Overall lengths of the meters shall be as follows:

Meter Size	Laying Length
6"	45"
8"	53"

4) The meter body, strainer body, and valve body shall be fabricated of ASTM A-570, Grade 36 steel with a coating of fusion-bonded epoxy both internally and externally. The meter body shall be welded to the valve body effecting a uni-body construction with the valve. The strainer outlet and meter inlet shall be connected by a Style 77 Victualic or other UL Listed/FM Approved grooved coupling with a Grade E EPDM gasket. The meter assembly shall have a rated working pressure of 175 psi.

   The meter cover shall be cast of water works bronze containing not less than 75% copper. The size, model, arrows indicating direction of flow, and "AWWA Class II" shall be cast in raised characteristics on the cover. The cover shall have a rated working pressure of 175 psi. The cover shall contain a calibration vane for the purpose of calibrating the Class II turbine meter in the mainline.

   A test plug shall be located in the maincase or the cover for the purpose of field testing the meter. The size of the test plug shall provide for sufficient flow for high flow test.

5) External Bolts. Meter cover bolts shall be made to Type 316 stainless steel.

6) Connections. Inlet and outlet flanges shall be round flanged per Table 4, AWWA C702, Class D.

7) Registers. Registers shall be permanently roll-sealed, straight reading in cubic feet. Registers shall include a center-sweep test, hand and low flow indicator. Registers shall be removable for replacement without interruption of the service line.

8) Register Box. Register boxes and covers shall be of bronze composition. The name of the manufacturer and the meter serial number shall be clearly identifiable and located on the register box cover.

9) Register Box Sealing. The register shall be affixed to the maincase by means of a tamperproof seal pin that must be destroyed in order to remove the register.

10) Meter Serial Number. The meter serial number shall be imprinted on the meter flange or cover as well as the register box cover.

11) Measuring Chambers. The turbine measuring element shall be a self-contained unit attached to the cover for easy removal from the meter body. As a unit, the turbine measuring element, cover, and register shall be calibrated and replaceable by any other like-calibrated unitized measuring element.

12) Intermediate Gear Train. The intermediate gear train shall be directly coupled to the turbine spindle and magnetically coupled to the register through the meter cover. The gear train shall be enclosed within the turbine measuring chamber. All moving parts of the gear train shall be made of self-lubricating polymer or 316 stainless steel for operation in water.

13) Bypass Meter. The bypass meter shall be of a positive displacement, nutating disc type. The bypass meter shall conform to AWWA C700 standards in the following sizes:

6" Mainline	1- 1/2" Bypass Meter
8" Mainline	2" Bypass Meter

14) Automatic Valve. The automatic valve shall be of a spring loaded, knuckle-joint type. All internal linkage parts shall be stainless steel. A vulcanized rubber disc on a stainless steel clapper plate shall seal against a bronze seat. The springs shall be type 18-8 stainless steel.

15) Strainer. A stainless steel basket-type strainer shall be provided. It shall prevent debris from passing through the meter and blocking flows downstream as well as protecting the turbine element. The strainer shall be provided with a flushing port to permit easy removal of sediment from the bottom of the strainer.

16) Performance. Registration accuracy over the normal operating range shall be 98.5% to 101.5%. Registration at the crossover shall not be less than 90%. Extended low flow registration shall not be less than 95%.

Remote Registration.

a) Type A - All meters shall be equipped with digital encoder remote registers per AWWA C707 and shall include all required hardware for installation and account number insertion. Three-wide cable is not to be included in quoted meter prices.

b) Type B - All meters shall be equipped with generator remotes per AWWA C706 and shall include all required hardware for installation. Two-wire cable is not to be included in quoted meter prices.

17) Manufacturers. The fire service meter assembly shall be Neptune HP Protectus III by Schlumberger Industries or approved equal.

215-7 WATER METER BOX

The Contractor shall furnish water meter boxes as follows:

3/4", 1" Meters	Brooks Products Model Nos. 33S (non-traffic areas), 33T (traffic areas) or approved equal.
1-1/2", 2" Disc or Turbine Meters	Brooks Products Model Nos. 66S (non-traffic areas), 66TR (traffic areas) or approved equal.
1-1/2", 2" Compound Meters	Brooks Products Model Nos. 67S (non-traffic areas), 67TR (traffic areas) or approved equal.

215-8 FLEXIBLE COUPLINGS

Unless otherwise specified, flexible couplings shall conform to the following:

1) Each coupling shall consist of one steel middle ring, two steel followers, gaskets, and sufficient numbers of Type 316 stainless steel bolts to compress the gasket without distorting the followers.

2) The thickness of the middle ring shall be such that the stress in the steel shall not exceed 50 percent of the yield point when subjected to the hydrostatic test pressure of the pipeline. The pressure rating shall be no less than the indicated design pressure. The middle ring thickness shall not be less than the thickness of the pipe jointed.

3) Middle rings shall be cold expanded a minimum of one-percent increase in diameter to test the weld and the size of the proper dimension.

4) The middle rings shall be coated with Keysite 740 or approved coating to a minimum dry film thickness of 10 mils. Follower rings shall be coated with a compatible shop coat for field coating.

5) Bolts shall be 5/8-inch diameter carriage bolts with hexagon nuts. The steel shall have minimum yield strength of 40,000 psi.

6) Buried coupling shall be coated with fusion bonded epoxy and provided with Type 316 stainless steel bolts and nuts.

7) Provide thrust ties where shown and where required to restrain the force developed by 1-1/2 times the operating pressures specified. Attach thrust ties to ductile iron pipe with socket clamps against a grooved joint coupling or flange.

8) Flexible couplings shall be by one of the following manufacturers or approved equal:

   1) Baker
   2) Dresser
   3) Rockwell
   4) Ford

215-9 PRECAST CONCRETE MANHOLES

Precast concrete manholes shall be Jensen Model No. 466 as manufactured by Jensen Precast Company, Fontana, California or approved equal.

PART 3 - CONSTRUCTION METHODS

SECTION 300 – EARTHWORK

300-1 CLEARING AND GRUBBING

300-1.3 Removal and Disposal of Materials.

300-1.3.1 General. Replace the entire subsection with the following:

Unless otherwise stated on the Plans or Specifications, all material removed from the Work shall become the property of the Contractor and shall be disposed of in a lawful manner. Removals shall include, but not limited to, all excess excavation material, trees and plants, debris, interfering portions of curb, gutters, asphalt and PCC concrete pavements and sidewalks (including base, where applicable), and miscellaneous items such as playground equipment, two trees, sign & posts, bollards. The Contractor shall conform to the following requirements:

(a) The Contractor shall not start any removal work unless it is prepared to perform reconstruction work within 24 hours of the time removals were begun, unless otherwise approved by the Engineer.

(b) Concrete and asphalt removal - All concrete and asphalt removed shall be hauled off the Work site no later than the calendar day following the day that the removal is performed.

(c) The Contractor shall complete forming and pouring of PCC construction within three (3) working days following the completion of all required water pipeline work.

All concrete removed shall be hauled off the Work site no later than the calendar day following the day that the removal is performed.

300-1.3.2 Requirements. Revise as follows:

(a) **Bituminous Pavement.** Replace the first and second sentences with the following:

Bituminous pavement shall be removed to neatly sawed edges.

Add subparagraphs (d) and (e):

(b) **Trees.** The City maintains a tree conservation policy. Unless otherwise shown on drawings, all trees are to be protected in place. Demolition and destruction of trees and tree parts, including trunks, branches and foliage, shall be limited to tree removals as shown on the Plans. Root pruning and removals shall be limited to the minimum required to construct new improvements where trees are to be conserved.

The Contractor shall remove only trees that have been approved by the Engineer for removal. Trees shall be removed in a workmanlike manner so as not to injure other standing trees, plants, and improvements which are to be preserved.

Stumps shall be ground down three feet (3') below ground surface within five (5) feet of the center of the stump. All surface roots shall be removed within the parkway.

The Contractor shall conform to the following requirements:

1) The cutting down or removal of trees is prohibited after the prescribed working hours unless permission is granted by the Engineer.

2) All debris from pruning or removing a tree shall be cleaned up and hauled away from the Work site on the same day that the tree is cut or pruned.

3) All holes created from removal of tree stumps shall be backfilled and graded to finish level by the end of the workday.

4) Sprinkler systems disrupted by the Contractor shall be capped or restored by the end of the workday.

(c) **Miscellaneous Removals and Relocations.** This work shall include all removals not specifically listed in the Proposal or otherwise covered by these Specifications, and all necessary relocations and restorations of walls, fences, plants, hardscape, signs and other items, whether shown on the Plans or not, and as necessary to complete the improvements.

300-1.4 Payment. Replace the entire subsection with the following:

Payment for CLEARING & GRUBBING will be made at the lump sum price bid and shall include full compensation for clearing and grubbing, removals, disposals or salvage of facilities identified on plans as well as pavement sawcutting and removal, and misc. items that interfere

with construction activities. Payment also includes the removal of playground equipment, the removal of two trees, sign & post, and three bollards.

300-2 UNCLASSIFIED EXCAVATION

300-2.2 Unsuitable Material.

300-2.2.1 General. Replace the first paragraph with the following:

If unsuitable material is found, the Contractor shall remove said material to the limits to be determined by the Engineer and shall replace said material with select fill or base material, as to be determined by the Engineer. Payment for removal and replacement shall be made as Extra Work or Force Account Work.

Payment for unsuitable material excavation and backfill shall be measured and paid for as Unclassified Excavation and Crushed Miscellaneous Base, respectively.

300-2.9 Payment.

Payment for Unclassified Excavation shall be included in the bid price for the installation of the pipe and no additional compensation will be allowed therefore..

SECTION 301 – TREATED SOIL, SUBGRADE PREPARATION, AND PLACEMENT OF BASE MATERIALS

301-2 UNTREATED BASE

301-2.1 General. Add the following:

Base is required under all PCC and AC improvements. Additional base may be required after review of work areas following removals. Prior to constructing PCC and AC improvements, the Contractor shall verify with the Engineer that the base sections as shown on the Standard Plans (including areas where no base is called for) are adequate. Payment for any changes shall be made pursuant to Section 3.

A minimum of 8-inches CMB shall be placed under curbs, curbs and gutters, AC pavement and cross gutters. A minimum of 6-inches CMB shall be placed under driveways (includes portion to right-of way/property line), local depressions, and AC or PCC pavement on private property as part of driveway reconstruction.

301-2.4. Measurement and Payment. Delete the second paragraph and add the following:
Payment for construction of Untreated Base under AC pavement, curb, curb and gutter, driveways, local depressions, sidewalks and cross gutters shall be considered as restoration of private property and included in the unit price bid for 24" WATER PIPELINE (CITY) and no additional compensation will be allowed therefore.

SECTION 302 – ROADWAY SURFACING

302-5 ASPHALT CONCRETE PAVEMENT

302-4.5 Distribution and Spreading. Delete the fourth paragraph and substitute the following:

Asphalt concrete shall not be placed until the atmospheric temperature is a minimum of 10ºC (50ºF) and rising, and the surface temperature of the underlying material is a minimum of 4ºC (40ºF). Asphalt concrete shall also not be placed during unsuitable weather.

Fully automatic screeds will be required on this Project. A fully automatic screed shall have a sled, 9.1m (30 feet) in length, on the side of the machine which will receive the next mat of material. A joint maker, ski, etc., placed on the side of the machine to ride on the existing or previously constructed surface or mat of asphalt concrete material may be required as directed by the Engineer.

Delete Table 302-5.5(A) and substitute the following:

TABLE 302-5.5(A)

Specified Total Thickness of Pavement		Required Number of Courses	Class Of Mixture
Greater Than mm(Inches)	But Not More Than mm(Inches)		
38(1-1/2)	75(3)	1	C2
75(3)	100(4)	2	Base Course - B

302-5.9 Measurement and Payment (Asphalt Concrete Type A). Payment for Asphalt concrete pavement shall be considered as restoration of property and included in the bid price for 24" WATER PIPELINE (CITY). The work shall include subgrade and base preparation, base course, leveling course, tack coat, header paving or temporary pavement and all work necessary to install complete in place.

SECTION 303 – CONCRETE AND MASONRY CONSTRUCTION

303-5 CONCRETE CURBS, WALKS, GUTTERS, CROSS GUTTERS, ALLEY INTERSECTIONS, ACCESS RAMPS, AND DRIVEWAYS.

303-5.1 Requirements

303-5.1.1 General. Replace the first sentence of the first paragraph with the following:

Concrete curbs, gutters, curb and gutters, sidewalks and cross gutters shall be constructed of Portland cement concrete of the class, compressive strength and other requirements prescribed in 201-1

Replace the first sentence of the second paragraph with the following:

Unless otherwise specified on the Plans, and except as otherwise prescribed in 303-5.1.3 under the heading "Driveway Entrances," the minimum thickness of walks shall be 3-1/2 inches.

303-5.5. Finishing

303-5.5.2 Curb Add the following:

Unless otherwise approved by the Engineer, the entire affected concrete curb and curb and gutter shall be removed by sawcutting the adjacent AC pavement one (1) foot from the edge of the affected area to be removed. Where applicable, the contractor shall reconstruct this 1-foot

wide section with a 3-1/2 inch thick section of AC pavement (C2-PG-64-10) over a 4-inch thick section of AC Pavement (B-PG-64-10) on an 8-inch thick section of CMB. If the affected curb and gutter is located in a spandrel, the spandrel shall be sawcut 6 inches minimum from the flow line of the gutter and the spandrel reconstructed to match the existing spandrel portion to remain and be on 8 inches of untreated Base.

303-5.9 Measurement and Payment. Replace the entire subsection with the following:

The Contractor shall be responsible to protect all new concrete work from being etched, scratched or otherwise marked following replacement thereof. If new concrete work is marked, the Contractor shall replace it at its expense and no extra costs will be allowed.

Payment for concrete curb and curb and gutter (excluding integral curb and curb/gutter associated with driveways, and cross-gutters) shall include all joints and keyways, Base, adjacent AC pavement reconstruction, protection of existing trees, and will be considered as restoration of property due to open trench installation of water and sewer pipelines and therefore included in the bid price for the 24" WATER PIPELINE (CITY) and no additional compensation will be allowed therefore.

Payment for cross-gutters and spandrels, shall include all joints as shown in standard plans and construction details, reconstruction of adjacent 1' wide AC pavement and will be considered as restoration of property due to open trench installation of pipe and therefore included in the bid price for the 24" WATER PIPELINE (CITY) and no additional compensation will be allowed therefore.

SECTION 306 – UNDERGROUND CONDUIT CONSTRUCTION

306-1 OPEN TRENCH OPERATIONS

306-1.1 Trench Excavation

306-1.1.1 General. Add the following:

All trenches shall be sawcut to the bottom of the existing concrete or asphalt section to minimize damage to adjacent pavement. The bottom of the trench shall be excavated uniformly to the grade of the bottom of the pipe and shall be given a final trim using a string line for establishing grade, such that each pipe section when first laid will be continually in contact with the ground along the extreme bottom of the pipe.

306-1.1.2 Maximum Length of Open Trench. Replace the first paragraph with the following:

The maximum length of open trench shall be 700 feet, or the distance necessary to accommodate the amount of pipe installed within the permitted work hours, whichever is greater. The distance is the collective length at any location, including open excavation, pipe laying and appurtenant construction and backfill which has not been temporarily resurfaced.

The Contractor shall either place backfill or steel plate or place temporary or base pavement at the end of each work day. The last twenty (20) feet of each trench may be open provided that this length is covered with traffic rated plating. Steel plates shall be non-skid and shall be tacked down or spiked and placed flush with the surrounding pavement. The Contractor shall be required to place temporary AC at the edges of the steel plates.

The above requirements for backfilling or use of steel plates will be waived in cases where the trench is located further than 100 feet from any traveled roadway or occupied structure. In such

cases, however, barricades, fencing and warning lights satisfactory to the Engineer shall be provided and maintained.

306-1.1.3 Maximum and Minimum Width of Trench. Add the following:

For sewers and potable water pipelines the bottom of the trench shall have a minimum width equal to the outside diameter of the pipe plus 12 inches and a maximum width equal to the outside diameter of the pipe plus 16 inches, unless otherwise shown on the Plans or approved by Engineer.

Add the following subsections:

306-1.1.7 Trench Over-Excavation. Trenches shall be over-excavated beyond the depth shown when ordered by the Engineer. Such over-excavation shall be to the depth ordered. The trench shall be refilled to the grade of the bottom of the pipe with either selected granular material obtained from the excavation, sand or crushed rock, at the option of the Engineer. When crushed rock is ordered, the material shall be a well-graded material of 1-1/2 inch maximum size. Bedding material shall be placed in layers brought to optimum moisture content, and compacted to 95 percent of maximum density where the pipeline trench passes under structures and 90 percent elsewhere. All work specified in this subsection shall be performed by the Contractor and paid in accordance with 3-3 of these Special Provisions.

Any over-excavation carried below the specified grade and not ordered by the Engineer, specified or shown on the Plans, shall be refilled to the required grade with suitable selected granular material. Such material shall be moistened as required and compacted to 95 percent of maximum density under structures and 90 percent elsewhere. Such work shall be performed by the Contractor at its own expense.

306-1.1.8 Excavation in Lawn Areas. Where pipeline excavation occurs in lawn areas, the sod shall be carefully removed and stockpiled to preserve it for replacement. Excavated material from the trench may be placed on the lawn provided a drop cloth or other suitable method is employed to protect the lawn from damage. The lawn shall not remain covered for more than seventy-two (72) hours. Immediately after completion of backfilling and testing of the pipeline, the sod shall be replaced in a manner so as to restore the lawn as near possible to its original condition.

Except where trees are shown on the Plans to be removed, trees shall be protected from injury during construction operations. No tree roots over 2 inches in diameter shall be cut without express permission of the Engineer. Trees shall be supported during excavation as may be directed by the Engineer.

306-1.2 INSTALLATION OF PIPE

306-1.2.1 Bedding.

(A) General. Replace the second sentence of the third paragraph with the following:

There shall be 4 inches minimum of bedding below the pipe barrel of sewer and storm drain pipes and 6 inches minimum of bedding below the pipe barrel of water pipes.

Add the following to the fifth paragraph:

Bedding material for ductile iron water lines shall be sand conforming to the requirements of 200-1.5.3 (minimum SE of 70) and 200-1.5.5 and shall be compacted to 95 percent of maximum density where the trench is located under structures, and 90 percent of maximum density elsewhere. Bedding shall be in accordance with City of Torrance Standard Plan No. T701-1.

Bedding material for reclaimed water pipelines shall have a minimum SE of 30. Bedding shall be imported sand with 100 percent passing a 3/8-inch sieve and not more than 20 percent passing a 200-mesh sieve.

Bedding for sewer pipes shall conform to City of Torrance Standard Plan No. T204-2.

306-1.2.2 Pipe Laying. Add the following:

Unless otherwise shown on the Plans or directed by the Engineer, minimum pipe cover for water pipes shall be 42 inches below proposed grade. Installation of ductile iron water mains and appurtenances shall conform to the requirements of AWWA C600. Installation of PVC pipes shall conform to the requirements of AWWA C900 and C905. The Contractor shall install pipe closure sections, fittings, valves and appurtenances shown, including pipe supports, bolts, nuts, gaskets and joining materials necessary for a complete installation.

At all times when the work of installing water mains and sewers is not in progress, all openings into the pipe and the ends of the pipe in the trenches or structure shall be kept tightly closed to prevent entrance of animals and foreign materials. The Contractor shall take all necessary precautions to prevent the pipe from floating due to water entering the trench from any source, shall assume full responsibility for any damage due to this cause and shall, at no cost to the CITY, restore and replace the pipe to its specified condition and grade if it is displaced due to floating. The Contractor shall maintain the inside of the pipe free from foreign materials and in a clean and sanitary condition until its acceptance by the Engineer.

Unless otherwise shown on the Plans or directed by the Engineer, concrete thrust blocks shall be constructed at all changes in direction. Thrust blocks shall be constructed against undisturbed earth. Each thrust block shall be placed so that valves and fittings are accessible for repair. Thrust blocks shall be as shown on City of Torrance Standard Plan No. T713-1 or as directed by the Engineer.

The Contractor shall furnish and place a blue tape, marked “Caution Water” every 36-inches or less, on top of the bedding and prior to placing concrete slurry or densified backfill along the length of the potable pipelines. The Contractor shall furnish and place an identification tape marked "CAUTION-WATER LINE BELOW."

All water lines shall be installed with a two (2) feet clearance from existing utility lines. A minimum of 1-foot clearance shall be provided when crossing utility lines unless directed otherwise by the Engineer. Separation of water mains from sewer and storm drain lines shall conform to the requirements of City of Torrance Standard Plan No. T714-1.

All exposed piping shall be adequately supported with devices of appropriate design. Where details are shown on the Plans, the supports shall conform thereto and shall be placed as indicated; provided that the support for all piping shall be complete and adequate regardless of whether or not supporting devices are specifically called for on the Plans.

306-1.2.13 Installation of Plastic Pipe and Fittings. Add "or these Special Provisions," to the end of the first sentence of the first paragraph.

Replace the first sentence of the third paragraph with the following:

The bedding zone shall extend down to not less than 4 inches below the pipe or bell, whichever is lower in elevation.

Add the following:

PVC pipe construction shall conform to AWWA Manual No. M23, "PVC Pipe - Design and Installation," and the manufacturer's installation guide. Combined deflections at PVC pipe joints with factory-assembled bell couplings shall not exceed 2 degrees or 75 percent of that recommended by the manufacturer, if smaller. All fittings and valves shall be supported so that the pipe is not subjected to the weight of those appurtenances.

Add the following subsections:

306-1.2.14 Flexible Couplings. Flexible couplings shall be installed according to the following requirements:

1) Clean each pipe end for a distance of 6 to 8 inches. Remove oil, dirt, loose scale, and rust so that the gaskets will seat on the pipe barrel to provide a positive seal. Wire brushes or non-oily rags may be used, depending on the condition of pipe ends.

2) Slip the follower rings over the pipe ends and slide them back over the cleaned area.

3) Wipe the gaskets clean, immerse them in soapy water or approved gasket lubricant, and slide them over the pipe ends.

4) Clean the coupling middle ring, paying particular attention to flare on the ends where the gasket will seat. Slip the middle ring entirely over the end of the pipe.

5) Position the end of the pipe to be joined to the other pipe such that a 1/2-inch gap is maintained between pipes. Center the coupling middle ring over the gap.

6) Lubricate the pipe and the flares of the middle ring with soapy water or gasket lubricant. Slide the gaskets and followers into place making sure the gaskets are pushed under the middle ring flare all the way around.

7) Insert the bolts. Nuts should be run on with the rounded or chamfered edge toward the follower ring.

8) Wrenching should be done progressively, drawing up the bolts on opposite sides a little at a time and returning to retighten until all bolts have a uniform tightness. During wrenching it is advisable to strike the follower rings with a hammer occasionally to make sure they are seating properly.

9) Torque application shall be in accordance with the manufacturer's recommendations.

306-1.2.15 Service Laterals for the Potable Water Distribution System. Installation of new service laterals for the potable water distribution system shall conform to AWWA C600 and City of Torrance Standard Plan Nos. T702. In addition, new services shall conform to the following requirements:

1) Material shall be Type K soft copper.

2) No joints shall be made in service lateral runs without the Engineer's permission. All joints so allowed shall be silver-solder joints.

3) The Contractor shall cut and disconnect, at the meter boxes and at the main, all existing service laterals which are connected to the existing mains to be abandoned in place, and connect new service laterals to the existing meters and new water mains.

4) Minimum separation between service lateral connections to the main shall be 18 inches.

5) All service laterals shall be installed before new mains are pressurized and chlorinated.

6) All service laterals are to be installed, chlorinated, pressure tested and flushed before connection is made to meters.

7) Excavation pits for service laterals shall be backfilled at the end of each work day.

8) If borings are used instead of open trench for service laterals, one service lateral per bore shall be installed.

9) The Contractor shall replace existing damaged water meter boxes as directed by the Engineer. The CITY will furnish the meter boxes to be replaced. The existing cast iron meter box lids shall be returned by the Contractor to the CITY yard. Any meter boxes damaged by the Contractor's operation shall be immediately replaced at its expense.

306-1.2.17 Sanitary Sewer Manholes. Add the following section:

FOR LACSD SEWER MANHOLES: See plan sheets SS-101 through SS-103.

FOR CITY SEWER MANHOLES:

1) Manhole Materials. Sewer manhole materials shall be in accordance with APWA standard plan 200-2, and Standard Specifications, as follows:

Concrete	201 (ASTM C478)
Gray Iron Castings	206-3

2) Manhole Construction

   a) Soil foundations for manhole base shall be compacted to a density of 95 percent of the maximum density per ASTM D 1557. Compaction limits shall be 12-inches beyond the perimeter of the concrete base and shall be a minimum of 12-inches in depth.

   b) Manholes shall be constructed in accordance with standard plan 200-2.

   c) Invert elevation of the pipes entering or exiting the manhole and interior inverts shall not vary more than 0.05 foot from the elevations of the existing sewers.

   d) All concrete used for poured foundations, mortar, fillet, grout, and pipe supports shall be class 560-C-3250 per the Standard Specifications.

   e) Depending on the size of the pipe, connections to existing manholes shall be made by core drilling through the manhole base.

3) Precast Concrete Manholes

   a) The vertical sections of the manhole may be of different heights in order that manholes of various depths can be readily assembled.

   b) Vertical sections of the manhole shall conform to the requirements of ASTM C 478.

   c) The Contractor shall submit shop drawings of the precast sections and eccentric cone to the Engineer for review and approval.

d) Circular precast manhole sections shall be provided with mastic gasket to seal joints between sections, such as RAM-NEK, KENT SEAL, or approved equal.

e) All lifting holes, except in manhole covers, and gaps at joints shall be filled with a nonshrink grout.

4) Manhole Steps

a) Manhole steps will be polypropylene-molded over 3/8-inch steel reinforcing rod, Model No. PS-2PFS. M.A. Industries, Inc., or approved equals.

b) Steps will be spaced uniformly in each manhole. Spacing may be between 12 inches to 16 inches on center. Lower step will be 12 inches above manhole shelf or top of main. The upper step shall be 6 inches below the top portion of the eccentric cone or 6 inches below the bottom of the flat cover. Also the steps shall be aligned vertically with the opening of the cone or cover.

c) Steps shall protrude from the manhole interior surface 5 inches.

d) Holes shall be drilled or precast per manufacturer's recommended size, or of sufficient size to allow for step insert into the wall. If the hole has been drilled too large, then the step shall be secured in place by using epoxy grout for the full depth of the drilled hole.

5) Manhole Frame And Cover. The manhole frame and cover shall conform to the Standard Specifications Section 206-3 and APWA Standard Plan 200-2 "Torrance Sewer" shall be cast into the cover.

6) Testing Of Sewer Manholes

a) All sanitary sewer manholes shall be tested for leakage by plugging the inlet and outlet sewer pipes with tight plugs, filling the manhole with water to a depth of four feet above the top of the pipe or two feet above the existing ground water level, whichever is greater, and allowing one hour for saturation of the manhole material. After the one-hour saturation period, the manhole shall be refilled to the original level. Two hours after the refilling, the difference in water surface elevation from original to final level shall be measured and converted into gallons per hour lost through manhole leakage.

b) The allowable leakage for manholes shall be 0.75 gallon per hour per foot diameter of the manhole.

Payment. New sanitary sewer manholes (LACSD & CITY) shall be paid at the unit Bid price each, accepted in place. Bid price shall include all the manhole subbase, base, sections, frame and cover, and incidental items to complete the work. Note: Due to proximity of existing oil pipelines near LACSD Manhole 1 at STA 9+91.83, it is recommended that LACSD Manhole 1 be completely constructed subsequent to the relocation of oil pipelines. The contractor is not prevented from constructing the base portion of said manhole prior to the relocation of oil pipelines; however, there shall be no additional compensation paid to the contractor should there be a delay between its ability to construct the base portion from the remainder of the manhole

306-1.3. Backfill and Densification.

306-1.3.1 General. Delete the seventh through the eleventh paragraphs and replace with the following:

Where trench is less than two feet wide, the trench shall be backfilled, per City of Torrance Standard Plan No. T116-2, with trench slurry backfill per 201-1 or CLSM per 201-6 to 1 inch below the existing pavement thickness, unless otherwise approved by the Engineer.

Where trench is greater than or equal to two feet wide, the trench shall be backfilled per City of Torrance Standard Plan No. T116-2, with suitable imported material, having a sand equivalent value of not less than 30, and shall be select granular material free from organic matter. Imported backfill shall be in accordance with 306-1.3.7. Backfill material shall be moistened to optimum moisture content and compacted to 95 percent of maximum density in the upper 3 feet and 90 percent below the upper 3 feet.

306-1.3.4 Backfilling Narrow Trenches. Replace the first paragraph with the following:

Backfill for narrow trenches shall be per City of Torrance Standard Plan No. T116-2, with trench slurry backfill per 201-1 or CLSM per 201-6 to 1 inch below the existing pavement thickness, unless otherwise approved by the Engineer.

306-1.3.5 Jetted Bedding and Backfill Compaction Requirements. Replace the entire subsection with the following:

Trench bedding and backfill densified through jetting shall be densified to a minimum relative compaction of 95 percent in the upper 3 feet of backfill and 90 percent below the upper 3 feet.

306-1.3.6 Mechanical Compaction Requirements. Replace the entire subsection with the following:

Mechanically compacted trench backfill shall be densified to a minimum relative compaction of 95 percent in the upper 3 feet of backfill and 90 percent below the upper 3 feet.

Add the following subsection:

306-1.3.9 Compaction Tests. Tests to determine soil compaction shall be made by a representative of the CITY, at the CITY's expense, except that all tests which fail to meet the requirements of these Special Provisions shall be paid for by the Contractor. Maximum density shall be determined in accordance with ASTM D1557 method, modified to use five layers. Field density tests shall be performed in accordance with the test procedure specified in ASTM D1556.

306-1.4 Testing Pipelines.

306-1.4.1 General. Modify subparagraph 6) as follows:

6) Water Pipelines – Testing and disinfection of the CITY's potable water mains shall be in accordance with 306-1.4.7 of these Special Provisions. Testing and disinfection of CALIFORNIA WATER SERVICE CO.'s potable water mains shall in accordance with the Plans for the Relocation of 18" Transmission Water Pipeline.

Add the following subsections:

306-1.4.7 Pressure Testing of Potable Water Mains. The Contractor shall furnish all equipment, tools, labor and materials necessary for testing the piping. Equipment shall include all pipes, fittings, valves and blow-off assemblies necessary to complete the test. In case fire hydrants are not available or cannot be used for flushing purposes, blow-off assemblies and other accessories shall be furnished by the Contractor at no cost to the CITY. Water for pressure testing will be furnished by the CITY without charge to the Contractor. The Contractor shall pressure test each phase of new waterline before proceeding to the next phase.

The Contractor shall test the piping after backfilling operations are completed. Pressure testing shall be performed on no more than 1,500 lineal feet of piping at one time. The test shall be made by closing valves when available, or by placing a temporary bulkhead in the pipe and filling the lines slowly with water. Care shall be used to see that air is permitted to escape during filling. After the line has been completely filled, it shall be allowed to stand under slight pressure for a sufficient length of time to allow the mortar lining to absorb what it will and to allow the escape of air from any air pockets, but for not less than 24 hours. During this period, bulkheads, valves, and connections shall be examined for leaks. If any are found, the leak shall be stopped, or in case of leakage through valves in the main line or through bulkheads, provision shall be made for measuring such leakage during the test. The test shall consist of holding the test pressure on each section of the line for a period of four (4) hours. The test pressure at the lowest point in the line shall be 150 psi. In areas designated as high pressure zone, the test pressure shall be 225 psi. The water necessary to maintain this pressure shall be measured through a meter or by other means satisfactory to the Engineer. The leakage shall be considered the amount of the water entering the pipeline during the test, less the measured leakage through valves and bulkheads. The leakage shall not exceed 25 gallons per inch of diameter per mile per 24 hours. Any noticeable leaks shall be repaired with new pipe or new fittings until a leakage is reduced to permissible limits.

306-1.4.8 Disinfection of Potable Water Mains. Upon completion of pressure testing, all new water mains shall be disinfected before they are placed in service. The Contractor shall furnish all equipment, tools, labor and materials necessary for disinfecting the water mains. Disinfection shall be accomplished by chlorination in accordance with AWWA C651. All chlorinating and testing operations shall be done in the presence of the Engineer. Disinfection shall be performed on no more than 1,500 lineal feet of piping at one time. No separate cost will be paid for these items.

Disinfection shall conform to the following requirements:

1) The Contractor shall prepare and submit for approval a written disinfection plan for each section of pipe to be tested a minimum of two weeks prior to its implementation.

2) The disinfection methods and procedures shall be in accordance with AWWA C651 and approved by the Engineer.

3) The CITY will collect water samples for analysis prior to placing the new facilities in service. Should any sample fail to meet the requirements of the State Health Department, the chlorination procedures shall be repeated. The Contractor shall be responsible for any costs associated with resampling.

4) The Engineer shall be notified 72 hours in advance of any disinfection, flushing, tapping, or connections to the existing system.

5) Any new water main, hydrant, valve, service, and accessories that has a chlorine residual of more than 150 ppm, will be flushed to system residual and rechlorinated to less than 150 ppm.

6) Where connections are to be made to an existing potable water system, the point of connection shall be disinfected in accordance with AWWA C651.

306-1.4.10 Payment. There shall be no separate payment for testing and disinfection.

306-1.5 Trench Resurfacing.

306-1.5.1 Temporary Resurfacing. Delete the last two paragraphs and replace with the following:

For concrete slurry backfill, a minimum of 24 hours shall elapse before temporary resurfacing will be allowed to be placed on the backfill. All temporary resurfacing shall be flush to adjacent surfaces. The Contractor shall be responsible to immediately repair or replace any damaged or settled resurfacing. The temporary resurfacing shall be replaced with permanent resurfacing not more than 15 calendar days after placement of temporary resurfacing.

There shall be no separate payment for temporary resurfacing. Full compensation for furnishing, placing, maintaining, removing, and disposing temporary resurfacing materials shall be included in the Contract unit price.

306-1.5.2 Permanent Resurfacing. Add the following:

Pavement removed or damaged in connection with performing the Work required under the Contract shall be replaced by the Contractor in accordance with these Special Provisions and City of Torrance Standard Plans. If a strip of existing pavement less than 5 feet is left between a trench and a gutter or edge of pavement, it shall be removed and new pavement placed in its stead. In cutting or breaking up street surfacing, the Contractor shall not use equipment which will damage the adjacent pavement. If the adjacent pavement is damaged, the Contractor shall be responsible for replacing the pavement with the same kind or better at its expense.

306-1.6 Basis of Payment for Open Trench Installations. Add the following as first sentence of the first paragraph:

This subsection shall apply to payment of installed sewer pipelines.

Revise the second paragraph to read:

The price per linear foot for pipeline and conduit in place shall be considered full compensation for furnishing and installing pipe, all wyes, tees, bends and specials shown on the Plans; the removal of interfering portions of existing sewers, storm drains, and improvements; the closing or removing of abandoned conduit and structures; the excavations of the trench; the control of ground and surface waters; the preparation of subgrade; placing and joining pipe; connecting to existing systems; beddings; backfilling the trench; permanent resurfacing; construction survey; shoring; temporary protection; and all other work necessary to install the pipe or conduit, complete in place.

Add the following subsections:

306-1.6.3 Basis of Payment for Open Trench Installations of Potable Water Mains.

Payment for open trench installation of potable water mains shall be per the Contract unit price per linear foot and shall include full compensation for furnishing and installing pipe, fittings, flange kits, elbows, thrust blocks, removing interfering portions of existing pipes, connection to existing pipelines, shoring, bedding, backfill, compaction, temporary and permanent trench resurfacing, temporary protection, pressure testing and disinfection, temporary and manual blow-off valves, construction survey and all appurtenances required for a complete system. Payment will also include the restoring in-kind of property damaged and/or removed during construction. (Property shall include, but is not limited to fences, landscaping, irrigation systems, curbs, gutters, asphalt concrete, pavement markings, striping, etc. on the TMT South Bay Business Park property and Dow Chemical property.)

- Payment for the 24" Water pipeline (City) will be made per linear foot.
- Payment for the 18" Water pipeline (Cal Water) will be made per linear foot.

NOTE: **A CAL WATER APPROVED CONTRACTOR SHALL PERFORM CONNECTION OF THE 18" CAL WATER PIPELINE TO THE EXISTING CAL WATER PIPELINE SYSTEM.**

306-2 JACKING OPERATIONS

306-2.6 Add the Following:

- Payment for the 36" Steel Casing (24" City Water) will be made per linear foot and shall include full compensation for materials, labor, pits, shoring, jacking and boring, temporary protection, removing interfering portions of existing pipes, and misc. items needed for the installation of the casing complete in place under the Harbor Mainline Tracks.

- Payment for the 30" Steel Casing (18" Cal Wtr.)(Loc 1) will be made per linear foot and shall include full compensation for materials, labor, pits, shoring, jacking and boring, temporary protection, removing interfering portions of existing pipes, and misc. items needed for the installation of the casing complete in place under the Harbor Mainline Tracks.

- Payment for the 30" Steel Casing (18" Cal Wtr.)(Loc 2) will be made per linear foot and shall include full compensation for materials, labor, pits, shoring, jacking and boring, temporary protection, removing interfering portions of existing pipes, and misc. items needed for the installation of the casing complete in place under the BNSF Aluminum Spur Track.

- Payment for the 24" Steel Casing (10" City Sewer) will be made per linear foot and shall include full compensation for materials, labor, pits, shoring, jacking and boring, temporary protection, removing interfering portions of existing pipes, and misc. items needed for the installation of the casing complete and in place, under the BNSF Aluminum Spur Track and on ExxonMobil property. Contractor shall have the option to construct the 24" Casing (10" City Sewer) that is greater than 30 linear feet from the centerline of BNSF railroad tracks using open trench installation, however, there will be no additional payment for this method.

- Payment of the pipe to be installed in each casing will be included in the bid price for the installation of the respective pipe.

306-3 TUNNELING OPERATIONS

Add the following subsections:

Tunneling shall be performed under existing railroad tracks, curb, gutter and cross-gutter as shown on the Plans. The Contractor shall exercise caution and care to prevent any damage in tunneling under these structures. There shall be no additional payment for this tunneling work. Payment for this work shall be included in the Contract unit price for the installation of the applicable steel casing.

306-5 ABANDONMENT OF CONDUITS AND STRUCTURES

Add the following subsections:

306-5.1 Abandoning Existing Water Mains.

The Contractor shall remove existing water mains and appurtenances from service at the locations shown on the Plans or as directed by the Engineer. Water mains specified to be abandoned in place, 12 inches in diameter and larger shall be filled with cement grout and have their ends plugged. Water mains specified to be abandoned in place, 10 inches in diameter and smaller shall have their ends plugged and left intact.

306-5.2 Abandoning Existing Water Valves.

The Contractor shall abandon existing water valves at the locations shown on the Plans and in accordance with the following requirements:

1) Where the valves are located in the parkway, the valves shall be abandoned by closing the valves, removing the valve cans, filling the hole with satisfactory material, and compacting it to 95% of maximum density and restore area to match adjacent.

2) Where the valves are located in concrete, the valve shall be abandoned by closing the valves, sawcutting the concrete, removing the valve cans, and filling the hole with concrete.

3) Where the valves are located in the curb, the valve shall be abandoned by closing the valves, sawcutting the concrete, removing the valve cans and repairing the curb with concrete epoxy to the satisfaction of the Engineer.

4) Where the valves are located in asphalt, the valves shall be abandoned by closing the valves, sawcutting the asphalt, removing the valve cans, filling the hole with slurry to the bottom of the asphalt section, and providing an asphalt cap on slurry.

5) All valve can removals shall be done in the presence of the Engineer.

306-5.3 Abandoning Fire Hydrants, Air & Vacuum Release Valves, and Blow-off Valves.

The Contractor shall abandon fire hydrants, air & vacuum release valves, and blow-off valves at the locations as shown on the Plans and in accordance with the following requirements:

1) All fire hydrants to be abandoned shall be removed to the bottom of the bury and the service line capped. Abandon valves per 306-5.2 of the Special Provisions.

2) The Contractor shall deliver the removed hydrant heads to the CITY Yard.

3) The Contractor shall place a yellow bag on any out of service fire hydrant. The Contractor shall advise the Engineer to notify the City of Torrance Fire Department of the location of the fire hydrants that are out of service.

4) The Contractor shall abandon blow-off valves by sawcutting the AC, shutting off the ball valve, removing the valve box assembly, backfilling the resulting cavity with slurry to the bottom of the AC, and capping the slurry with AC. The Contractor shall also remove the blow-off hydrant, backfill the cavity and restore the surface to match the surroundings.

5) All air & vacuum release valves to be abandoned shall be removed to the elbow and the pipe capped. Abandon valves per 306-5.2 of the Special Provisions.

306-5.4 Abandoning Water Services.

The Contractor shall abandon water services at the locations as shown on the Plans and in accordance with the following requirements:

1) The Contractor shall cut and disconnect, at the meter boxes and at the mains, all existing service lines, which are connected to the existing water mains to be abandoned in place.

2) All existing corporation stops shall be turned off, service lines disconnected and corporation stops capped.

3) All existing waterlines to be abandoned shall be removed or filled with soil cement per 301-3.1

306-5.5 Payment. Payment for abandoning existing water mains shall be per linear foot.

Payment abandoning valves shall be per the Contract Unit Price and shall include all appurtenant work.

Payment for abandoning blow-off valves shall be per the Contract Unit Price and shall include all appurtenant work, associated piping and valves.

Payment for abandoning air & vacuum release valves shall be per the Contract Unit Price and shall include all appurtenant work, associated piping and valves.

Payment for abandoning fire hydrants shall be per the Contract Unit Price and shall include all appurtenant work, associated piping and valves.

Payment for abandoning existing water services shall be per the Contract Unit Price and shall include all appurtenant work, associated piping and valves.

306-9 SEWER BYPASS Add the following section:

1) Submittals

a) The Contractor shall submit for the Owner's approval, a written by-pass plan at least ten (10) working days prior to the beginning of any individual construction process where by-pass is utilized in order to complete the work per the construction sequence. Should a by-pass pump be required, the plan shall contain a contingency plan in the event of pump(s) failure, the sequence of construction and a list of all piping, pumps, plugs, etc. required for each site.

b) The Contractor shall submit to the Sanitation Districts of Los Angeles County, Sewer Design Section for their approval, a written by-pass plan at least ten (10) working days prior to the beginning of the construction process where by-pass utilized in order to complete the work per the construction sequence. Should a by-pass pump be required, the plan shall contain a contingency plan in the event of pump(s) failure, the sequence of construction and a list of all piping, pumps, plugs, etc. required for that particular site.

c) Should a by-pass pump be required, the Contractor shall submit a list of all the equipment to be used in by-pass pumping process including the capacity of pumps to be used.

2) General

a) When by-pass pumping is required, the Contractor shall supply the pumps, conduits, and other equipment to divert the flow of sewage around the pipe section from manhole to manhole in which work is to be performed. The by-pass system shall be of sufficient capacity to handle existing flow plus additional flow that may occur during a rainstorm. The Contractor shall have on-site backup pumps capable of pumping 150% of the existing flow.

b) All pump(s) drives shall have noise suppresser exhaust systems to mitigate the noise levels to less than 50db or 10db above ambient noise levels when measured at the property lines closest to the noise source.

c) The sewage flow from the house laterals shall be maintained during construction and handled in a manner so as not to create a public nuisance or health hazard during the execution of the work to be performed under this Contract. In the event that sewage backup occurs and enters dwellings or other structures the Contractor shall be responsible for cleanup, repair, property damage costs and all claims arising there from. All spill shall be contained and returned to the sewer system.

d) The Contractor will be responsible for furnishing the necessary labor and supervision to set up and operate the pumping and bypassing system.

e) The Contractor shall provide reliable sewer service to the users of the sanitary sewer at all times, so as to prevent backup and/or overflow into adjacent streets, ditches, storm sewers, and waterways during rehabilitation of the sewer pipes to allow for manhole construction, rehabilitation, and CCTV inspection.

f) Payment for sewer bypass shall be included in the item per linear foot of pipe for the sewer pipelilne.

SECTION 310 – PAINTING

310-5 PAINTING VARIOUS SURFACES

Add the following subsections:

310-5.7 Exterior Coatings for Exposed Water Pipes and Appurtenances

310-5.7.1 General. The exterior surfaces of water pipes and appurtenances that will be exposed to the atmosphere inside structure or above ground shall be thoroughly cleaned and then given a shop coat of rust-inhibitive primer conforming to 210-1.8 of these Special Provisions.

Where practicable, each succeeding coat of paint shall be of a different color. Colors as specified shall be maintained unless found to be no longer available from the manufacturer. If an alternative paint system is selected and approved by the Engineer, the Engineer will select the colors to be utilized from the color samples presented.

Each coat shall produce a minimum film thickness as specified herein. In areas where this thickness is not developed, sufficient additional coats shall be applied to produce it. All coating thicknesses specified herein refer to minimum dry film thickness.

Manufacturer's instructions shall be strictly followed in the application of proprietary coatings and materials.

310-5.7.2 Ungalvanized Ferrous Metals. Prior to coating, surfaces shall be sandblasted in accordance with SSPC-SP-6 (Commercial Blast Cleaning), except that where, in the Engineer's opinion, sandblasting is inappropriate because of the size, location or nature of the surface, or because of the difficulty in protecting adjacent work, such surfaces shall be either power tool cleaned in accordance with SSPC-SP-3 (Power Tool Cleaning) or hand tool cleaned in accordance with SSPC-SP-2 (Hand Tool Cleaning).

All paint shall be brush applied unless an alternate method is approved in advance by the Engineer. Surfaces shall be primed or spot primed as required. Prime coat shall be 2 mils. followed by two succeeding coats of 2 mils. each. Total thickness of the completed coating system shall be 6 mils.

310-5.7.3 Galvanized Ferrous Metals. Prior to coating, surfaces shall be cleaned in accordance with SSPC-SP-7 (brush-off blast cleaning).

All paint shall be brush applied unless an alternate method is approved in advance by the Engineer. Surfaces shall be primed or spot primed as required. Prime coat shall be 2 mils. followed by two succeeding coats of 2 mils. each. Total thickness of the completed coating system shall be 6 mils.

310-5.7.4 Payment. There shall be no separate payment for painting and coating. This cost shall be included in the work to which it is appurtenant.

310-5.8 Painting of Reclaimed Water Piping and Appurtenances

310-5.8.1 General. The Contractor shall furnish all material, labor, and equipment necessary to line and coat all piping, valves, fittings, pipe hangers, and other ferrous metal surfaces not shop lined and coated in accordance with the following schedule:

Item	Color	No. of Coats

Valve Box Covers	Purple	2
Air Valve Blow-off Valves	Purple	2
Vault Covers (Top)	Zinc Chromate Primer	1
	Aluminum	2
Vault Covers (Underside)	Koppers No. 50 Bitumastic	2
Piping and Valves (In Vault)	Tenman 66	2
Guard Posts	Safety Yellow	2
Aboveground or Exposed Pipe	See Section 310-5.8.3	---

310-5.8.2 Surface Preparation. All ferrous surfaces to receive protective coatings shall be sandblasted to commercial standards per 310-2.5 prior to the application of coatings. All surface irregularities such as weld spatter, sharp corners, rough welds, etc., shall be ground smooth. All surfaces shall be completely free of grease, oil, and other foreign material.

310-5.8.3.2 Coating System. The coating system shall be a 3-coat system as follows:

Primer: Tnemec; Series 90-97, "TnemeZinc," Zinc Rich Urethane Primer - 3 mils.

Intermediate: Tnemec; Series 66, "Hi-Build Epoxoline," Epoxy - Polyamide Coating - 4 mils.

Finish: Tnemec; Series 75 "Endura-Shield," Hi-Build Acrylic Polyurethane Enamel - 4 mils.

310-5.8.3.3 Inspection. Inspection shall be as follows:

Shop primed or factory finished items shall be inspected at the job site before further painting or coating. Areas of chipped, peeled, or abraded coating shall be in accordance with these requirements.

Contractor shall provide scaffolding and testing equipment to permit inspection.

Color shall be selected by the Engineer from submitted paint samples of the manufacturer's standard colors.

310-5.8.4 Payment. There shall be no separate payment for painting and coating. This cost shall be included in the work to which it is appurtenant.

310-5.9 Waterproofing (Concrete)

310-5.9.1 General. The Contractor shall furnish all material, labor and equipment necessary to waterproof the interior and exterior of all manholes and vaults.

310-5.9.2 Surface Preparation

1) Do not treat concrete surfaces with chemical hardeners or curing agents prior to the application of waterproofing.

2) Examine surfaces to be waterproofed for form tie holes and structural defects, such as honeycombing, rock pockets, faulty construction joints, cracks, etc. Repair these areas in accordance with Section 303.

3) Concrete surfaces shall have an open capillary system to provide tooth and suction and shall be clean, free from scale, form oil, latency, curing compounds, and any other foreign matter. Lightly sandblast, water blast, or acid etch with muriatic acid (15% to 20%) to provide a clean absorbent surface. Saturate surfaces to be acid etched with water prior to application of acid. Vertical surfaces may have a sacked finish. Do not apply a slurry coat of water materials to horizontal concrete deck surfaces that are less than 20 hours old.

4) Use light sandblasting or etching to remove the surface glaze of dense or steel troweled concrete.

5) Abrasive clean and wash construction joints.

310-5.9.3 Application

1) After completing repairs, apply a top-coat system to the concrete surfaces to be treated, apply after curing and finishes are complete. Application of waterproofing and any point top coatings shall conform to the manufacturers recommended application procedures.

2) The Contractor shall have the manufacturer's representative advise and/or supervise the waterproofing application in person.

3) Apply crystalline waterproofing material to concrete, which has been thoroughly saturated with clean water. Moisten surfaces to be treated prior to application. Remove free water prior to application of waterproofing material.

4) Apply crystalline waterproofing to:

   (a) Interior walls and roof of concrete vaults and manholes. Exterior walls of concrete vaults and manholes.
   (b) Joints of precast concrete manholes as shown on the Plans.
   (c) The interior surfaces shall have a white color and the exterior a gray color.

5) Apply second coat when the first coat has reached an initial set. Use light water spray on surfaces to be coated if rapid drying occurs.

310-5.9.4 Payment. There shall be no separate payment for waterproofing. This cost shall be included in the work to which it is appurtenant.

Add the following Section 313 in its entirety.

SECTION 313 – INSTALLATION OF MISCELLANEOUS POTABLE WATER DISTRIBUTION SYSTEM MATERIALS

313-1 CONNECTIONS TO EXISTING POTABLE WATER MAINS

Connections to the existing water mains shall be made within ten (10) working days of passing disinfection test and shall be as shown on the Plans and in accordance with City of Torrance Standard Plan No. T-723-2 for ductile iron pipe. If the Contractor fails to complete the connections within this time period, the Contractor shall be required to flush the new line weekly through a construction meter per the direction of the Engineer and pay all additional costs of water required for flushing.

In the event that a planned shut down of an existing water main is found necessary, the Contractor shall request approval four (4) days in advance from the Engineer for the time, date,

duration and location of proposed shut down. Preparation and distribution of shut down notices shall be the responsibility of the Contractor. Shut down notices shall be reviewed by the Engineer and shall be in the form of a door hanger. These shut down notices shall indicate the time/date/duration/reasons for the shut down. Distribution of shut down notices shall be accomplished by placing said shut down notice on the main entry door of each dwelling unit, businesses, etc. effected by the shut down. All shut down notices shall be distributed (48 hours) 2 days in advance of the shut down.

The limits of this area for distribution of the shut down notice shall be approved the Engineer prior to beginning the distribution process. Sample of the approved shut down notice will be available at the pre-construction meeting.

Shut down of any existing water mains may have to be performed during off-hours when the water demand is low. The Engineer shall determine the time of day when the shutdown is to be performed.

313-1.1 Payment. There shall be no separate payment for connection to the existing water main. Full compensation for furnishing labor, materials and equipment necessary to complete the connection shall be included in the Contract unit price per linear foot of pipe installed.

313-2 INSTALLATION OF VALVES

The size of valves to be installed shall be as shown on the Plans. All buried valves shall have the operating nuts in a vertical position except as otherwise noted. Valve boxes where called for, shall be centered over the operation nuts and shall be set plumb and conform to City of Torrance Standard Plan No. T712.

313-2.1 Payment. Payment for valves shall be per the Contract unit price and shall include connection to main and all related appurtenant work.

313-3 INSTALLATION OF AIR AND VACUUM RELEASE VALVES

Air and vacuum release valves shall be installed where shown on the Plans and in accordance with City of Torrance Standard Plan No. T708-2.

313-3.1 Payment. Payment for air and vacuum release valves shall be per the Contract unit price and shall include connection to main and all related appurtenant work, associated piping and valves.

313-4 FIRE HYDRANTS

The Fire hydrant assembly shall include the hydrant extension, bury, thrust blocks, 6" service line, 6" valve, and other appurtenances as indicated in City of Torrance Standard Plan No. T706-3. Hydrant extension and bury shall be cement-mortar lined per AWWA C 104.

All fire hydrants shall be painted yellow after receiving a prime coat, as described in Section 210 of these Special Provisions.

The plan layout of proposed hydrants are diagrammatic only. Actual locations of new hydrants shall be laid out in the field in the presence of the Engineer.

When the location of a proposed fire hydrant is in conflict with the existing water main, the Contractor shall install the fire hydrant in phases and protect the existing water main in place until the new water main has been put into service.

For elevated road fire hydrants, the Contractor shall install the tie-in to the relocated main and 6" valve with a blind flange on the hydrant side at the tie-in only. No vertical risers shall be constructed with this contract.

313-4.1 Payment. Payment for fire hydrant assemblies shall be per the Contract unit price and shall include connection to main and all related appurtenant work.

Payment for the valves at the proposed elevated fire hydrant locations shall be per the Contract unit price and shall include connection to main and all related appurtenant work.

313-5 BLOW-OFF ASSEMBLIES

The Contractor shall install the blow-off assembly, including the 2-inch service line, 2-inch ball valve, and other appurtenances at the locations shown on the Plans and in accordance with City of Torrance Standard Plan No. T707-2.

313-5.1 Payment. There shall be no separate payment for temporary and manual blow-off valve assemblies required for construction, testing, and disinfection only.

APPENDIX I

CITY OF TORRANCE BUSINESS LICENSE

Please call the Business License Office at 310-618-5923 for fee amounts. Payment must be submitted with your application.

FOR OFFICIAL USE ONLY

1. LICENSE NO. | 2. CATEGORY NO.

HOME OCCUPATION | HEALTH PERMIT | N.A.I.C.S. CODE

City of Torrance, Revenue Division
Business License Application

3031 Torrance Boulevard, Torrance, California 90503 • 310/618-5828

PART I. APPLICANT TO ANSWER ALL QUESTIONS IN THIS SECTION (print or type)

3. BUSINESS NAME OR DBA		4. CORPORATE NAME (IF DIFFERENT FROM ABOVE)		
5. BUSINESS ADDRESS	SUITE #	CITY	STATE	ZIP
6. MAILING ADDRESS	SUITE #	CITY	STATE	ZIP
7. NATURE OF BUSINESS (state type of business being conducted at this location)		8. NO. OF PERSONS WORKING AT LOCATION	9. BUSINESS PHONE	
10. NAME OF PERSON MAKING APPLICATION (must be an owner, partner or corporate officer)		11. TITLE	12. HOME PHONE	
13. RESIDENCE ADDRESS	CITY / STATE / ZIP	14. DRIVER'S LICENSE NO.	15. STATE SALES TAX NO.	
16. STATE CONTRACTOR'S LICENSE NO.	17. SQUARE FOOTAGE	18. SOCIAL SECURITY NO.	19. FED TAX ID#	20. STATE TAX ID#

21. OWNERSHIP INFORMATION

☐ PARTNERSHIP ☐ CORPORATION ☐ SOLE OWNERSHIP

NAMES OF OWNER, PARTNERS, OR PRINCIPAL OFFICERS	TITLE	HOME ADDRESS	HOME PHONE

I declare that I am the owner, partner, corporate officer or person with the power of attorney, and i understand if all the information provided above is not the true the business license being applied for may be revoked as outlined in section 31.9.10 of the Torrance Municipal Code.

I am duly authorized to make this application. All of the information provided in this application is true and correct. The business will not provide any service, good or product which is illegal under Federal, State, or Local Laws. I declare under penalty of perjury that the foregoing is true and correct.

SIGNATURE _____ DATE _____

PART II. FOR OFFICIAL USE ONLY

BASIC FEE	APPLICATION SENT FOR ZONING? ☐ YES ☐ NO	PROCESSING FEE	FIRE INSP. FEE	OTHER	
PER PERSON FEE	OTHER (cont'd)				
PENALTY FEE	HOLD ☐ YES ☐ NO	ENT. FEE	DANCE/PIANO FEE		
RECEIVED BY	DATE	CHECK NO.	BANK NO.	CASH	TOTAL AMOUNT $

APPENDIX II

CITY OF TORRANCE STANDARD PLANS

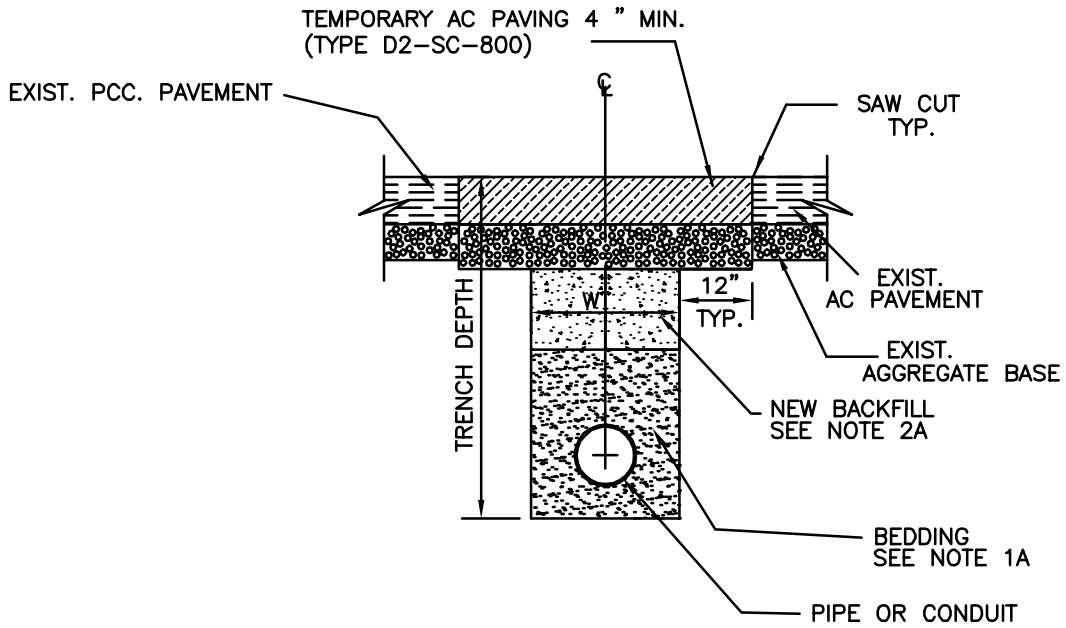

TEMPORARY ASPHALT REPAIR

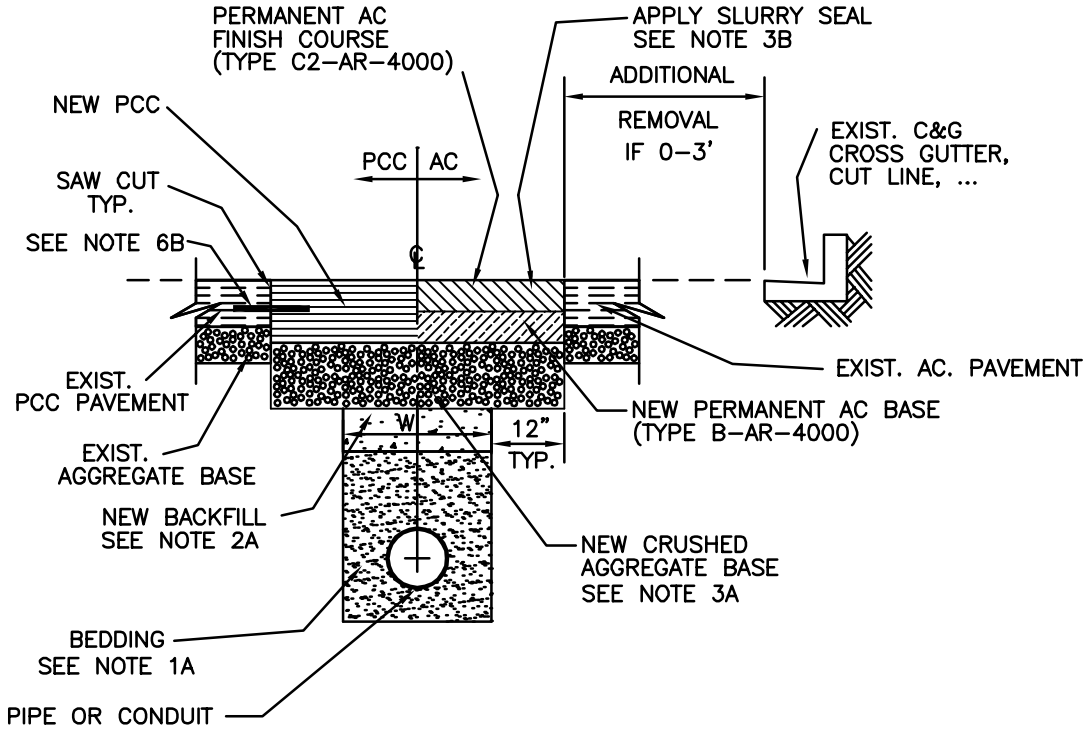

PERMANENT TRENCH REPAIR

TYPICAL TRENCH SECTION WITHIN ROADWAY
(SEE NOTE 8C FOR EXCEPTION)

CITY OF TORRANCE - ENGINEERING DEPARTMENT

DATE ISSUED	TRENCH BACKFILL & PAVEMENT REPAIRS	STANDARD NO.
10 SEP 2002	RICHARD W. BURTT ENGINEERING DIRECTOR R.C.E. NO. 32862 R.T.E. NO. 1538	T116-2
		SHEET 1 OF 4

TT\T116-2

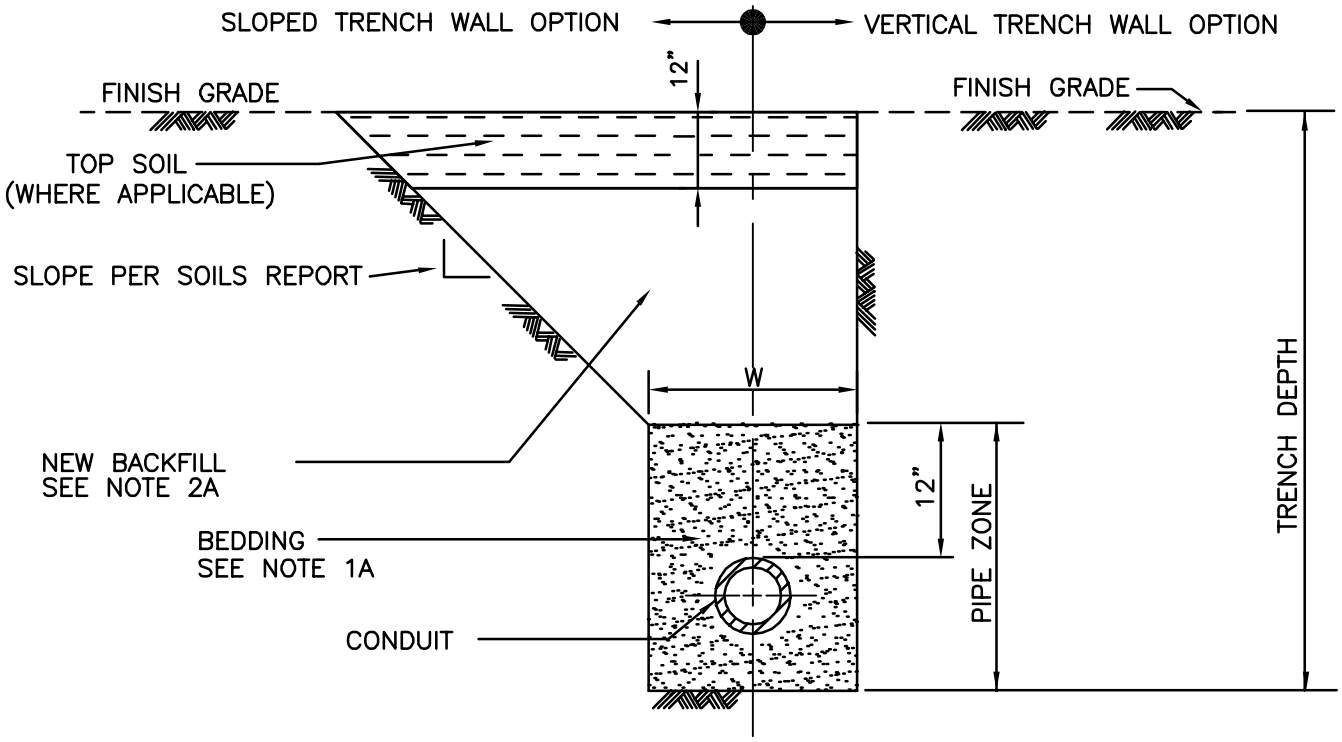

TYPICAL TRENCH SECTION OUTSIDE ROADWAY

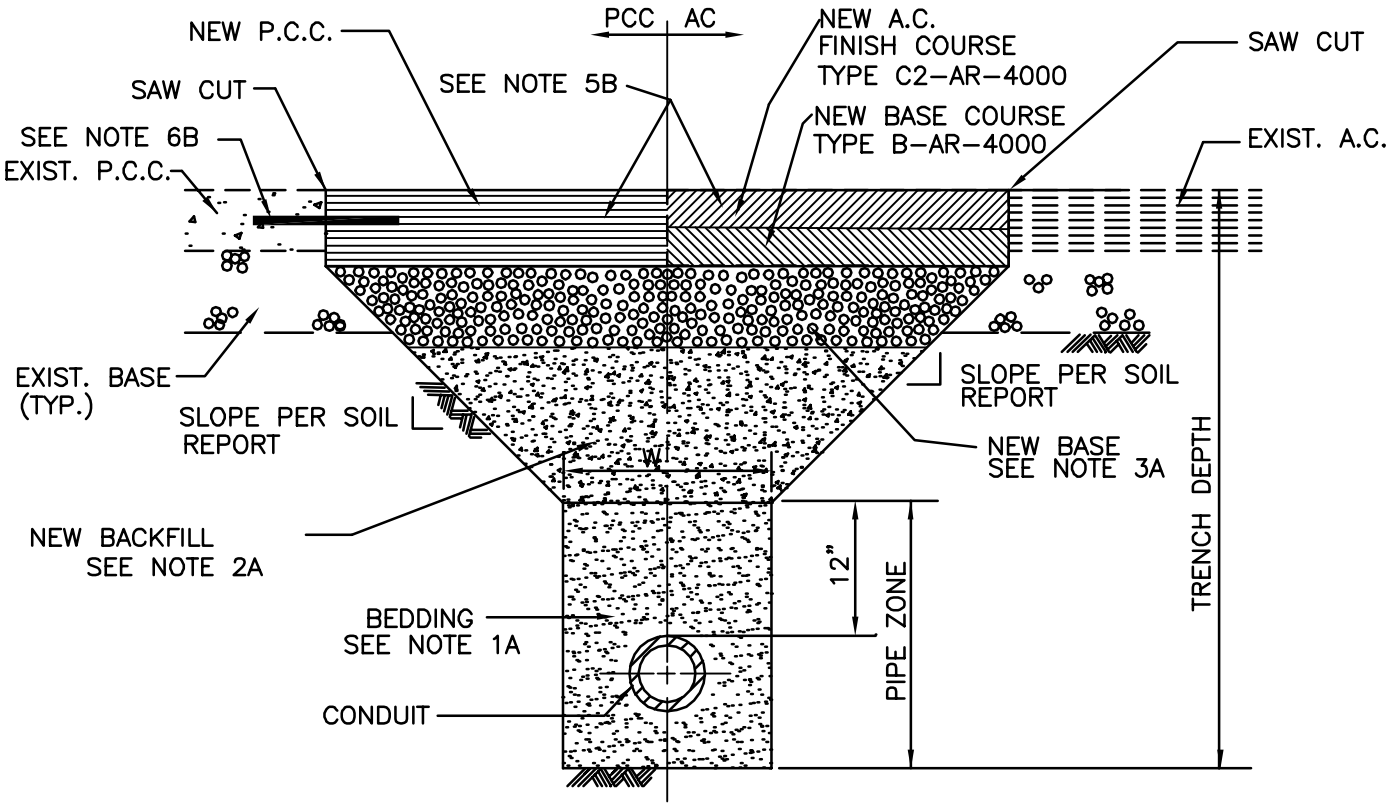

TYPICAL TRENCH SECTION WITHIN ROADWAY
SLOPED TRENCH WALL OPTION

CITY OF TORRANCE - ENGINEERING DEPARTMENT

DATE ISSUED	TRENCH BACKFILL & PAVEMENT REPAIRS	STANDARD NO.
10 SEP 2002	RICHARD W. BURTT ENGINEERING DIRECTOR R.C.E. NO. 32862 R.T.E. NO. 1538	T116-2
		SHEET 2 OF 4

TT\T116-2

NOTES:

BELOW GROUND:

1A. SEE STD. PLAN NO'S T204, T302, AND T701 FOR BEDDING REQUIREMENTS.

2A. FOR TRENCHES WITH "W" GREATER THAN 2' OR IF TRENCH WALLS ARE SLOPED, BACKFILL SHALL BE CRUSHED AGGREGATE BASE, OR NATIVE OR OTHER EXCAVATION MATERIAL WITH AN SE VALUE OF 30 OR GREATER. BACKFILL MATERIAL SHALL BE DENSIFIED TO A RELATIVE COMPACTION OF 95% IN THE UPPER 3 FEET AND TO 90% BELOW THE UPPER 3 FEET. FOR TRENCHES LONGER THAN 200' OR LARGER THAN 1,000 SQUARE FEET A LICENSED SOILS ENGINEER SHALL BE PRESENT TO MONITOR THE NATIVE OR IMPORTED BACKFILL OPERATION AND TEST FOR COMPACTION AT 100' OR 200 SQUARE FOOT MAXIMUM INTERVALS

FOR TRENCHES WITH "W" LESS THAN OR EQUAL TO 2' IN THE ROADWAY, A SAND-CEMENT SLURRY (100-E-100) BACKFILL SHALL BE USED. SLURRY SHALL CURE 16 HOURS MINIMUM PRIOR TO BASE PLACEMENT. RAPID SET CEMENT SLURRY SHALL CURE 1 HOUR MINIMUM PRIOR TO BASE PLACEMENT.

IN AREAS NOT IN EXISTING ROADWAY, BACKFILL SHALL BE COMPACTED TO A RELATIVE COMPACTION OF 90%.

3A. NEW CRUSHED AGGREGATE BASE SHALL BE 2" THICKER THAN EXISTING BASE, BUT NOT LESS THAN 8" THICK.

4A. EXCAVATED MATERIAL NOT APPROVED FOR USE IN TRENCH BACKFILL SHALL BE REMOVED FROM JOB SITE UNLESS OTHERWISE USED IN THE WORK.

5A. WHERE WET, UNSTABLE OR RUNNING SOIL IS ENCOUNTERED, SOLID SHEATHING IS REQUIRED FOR ALL VERTICAL TRENCH WALLS.

6A. ANY SHORING REQUIRED SHALL BE DESIGNED BY A REGISTERED CIVIL OR STRUCTURAL ENGINEER.

7A. "W" SHALL BE MEASURED AT TOP OF BEDDING.

VISIBLE SURFACE:

1B. IF REMAINING AC PAVEMENT BETWEEN EDGE OF TRENCH AND EXISTING GUTTER, CURB, CROSS GUTTER, OR CUT LINE IS LESS THAN 3 FEET IN WIDTH, THEN THIS AC SHALL BE REMOVED AND REPLACED WITH NEW AC PAVEMENT.

2B. THE ENGINEER MAY REQUIRE WIDER REMOVAL AREA THAN THAT SHOWN ABOVE TO SUIT FIELD CONDITIONS.

3B. CRACKS SHALL BE SEALED AND A TYPE 2 SLURRY SEAL COATING WITH 2% LATEX SHALL BE APPLIED FROM LANE LINE TO LANE LINE FOR LONGITUDINAL TRENCHES GREATER THAN 200' IN LENGTH FOR ANY LANE AFFECTED.

4B. THE THICKNESS OF REPLACEMENT ASPHALT SHALL BE A MINIMUM OF 1" GREATER THAN EXISTING AC (2" GREATER IF EXISTING STREET IS PAVED WITH RUBBERIZED AC) BUT NOT LESS THAN 4" (5" FOR RUBBERIZED AC). IF EXISTING PAVEMENT IS PCC, REPLACEMENT CONCRETE SHALL BE AS PER SECTION 201.1 OF THE STANDARD SPECS AND 1" THICKER THAN EXISTING.

5B. THE NEW FINISH COURSE SHALL BE PLACED FLUSH WITH THE EXISTING ADJACENT PAVING SURFACE – MAXIMUM VARIANCE FROM FLUSH IS 1/8". NEW AC PAVEMENT ADJACENT TO EXISTING EDGE OF PCC GUTTER SHALL BE 3/8" HIGHER THAN EDGE OF GUTTER.

6B. FOR PCC ROADWAY PAVEMENT, DOWEL AT 24" O.C., #4 DEFORMED BAR, 6" EMBEDMENT, AND CENTERED IN EXISTING SLAB WITH 1–1/2" MINIMUM CONCRETE COVER. DOWEL SHALL BE EPOXIED IN EXISTING SLAB AND CAST IN NEW SLAB.

METHODOLOGY:

1C. AT THE END OF EACH WORK DAY, ANY TRENCH IN AN ARTERIAL OR IN ROLLING HILLS ROAD, MAPLE/235TH ST. OR ARLINGTON AVE. SHALL BE COVERED BY NON–SKID STEEL PLATES OR BE PAVED WITH TEMPORARY OR PERMANENT PAVEMENT FLUSH WITH ADJACENT PAVEMENT SURFACES. WHEN NON–SKID STEEL PLATES ARE USED, THEY SHALL BE WELDED, SECURED IN PLACE, RAMPED WITH AC, AND NOT USED FOR MORE THAN 48 CONSECUTIVE HOURS ON THE SAME SEGMENT OF TRENCH. "PLATE AHEAD" SIGN SHALL BE PROPERLY INSTALLED WHEN PLATES ARE IN USE. OTHER CITY STREETS MAY HAVE LESSER REQUIREMENTS AND WILL BE CONSIDERED ON A CASE BY CASE BASIS.

2C. ALL TRAFFIC LANES SHALL BE CLEANED AND RESTORED FOR USE IMMEDIATELY UPON PLACEMENT OF TEMPORARY AC PAVEMENT, TRENCH PLATES AND/OR FINAL AC PAVEMENT.

3C. ALL TRAFFIC STRIPING AND/OR MARKINGS REMOVED OR DAMAGED DURING CONSTRUCTION SHALL BE REPLACED IN KIND AS DIRECTED BY THE ENGINEER.

4C. TRAFFIC CONTROL SHALL BE PER CITY OF TORRANCE "CONSTRUCTION TRAFFIC CONTROL PROCEDURES ON CITY STREETS" AVAILABLE FROM THE ENGINEERING DEPARTMENT PERMIT COUNTER.

5C. MORITORIUM FOR CUTTING NEW OR RECONSTRUCTED STREETS IS 5 YEARS WITHOUT SPECIAL APPROVAL FROM THE ENGINEERING DIRECTOR. NEW UTILITY SERVICE CONNECTIONS AND SERVICE LINE REPAIRS ARE EXCEPTED IF NOT ABLE TO BE FORSEEN AT THE TIME THE ROADWAY WAS RECONSTRUCTED. APPROVED LONGITUDINAL EXCAVATIONS IN NEW STREETS SHALL REQUIRE THE FULL LANE TO BE GROUND AND OVERLAID.

6C. SLURRY SEALING OF TRENCH AREA MAY BE OMITTED IF PROJECT IS COORDINATED WITHIN ONE YEAR OF A CITY STREET REHABILITATION OR SLURRY SEAL PROJECT.

7C. A COLLECTION DEVICE SHALL BE USED TO COLLECT SEDIMENTS GENERATED DURING SAWCUTTING OPERATION.

8C. TRENCHES WITH "W" LESS THAN 8" WIDE AND LESS THAN OR EQUAL TO 24" DEEP ARE NOT REQUIRED TO USE T–SECTION PAVEMENT CONSTRUCTION, OR APPLY SLURRY SEAL.

9C. ALL PAVEMENT REMOVALS SHALL USE STRAIGHT LINE SAW CUTS A MINIMUM OF 1.5" DEEP.

10C. BORING SHALL BE CONSIDERED AS A CONTINUOUS TRENCH AS FAR AS EXCAVATION REPAIR. POTHOLES LOCATED INTERMITTENTLY WILL NOT BE TREATED AS SEPARATE EXCAVATIONS BUT AS A CONTINUOUS EXCAVATION. THE CITY SHALL RESERVE THE RIGHT TO REQUIRE BORING OR OPEN TRENCH AS THE SITUATION MAY ARISE.

SANITARY SEWER GENERAL NOTES

1. ALL WORK SHALL BE DONE IN ACCORDANCE WITH THE STANDARD SPECIFICATIONS FOR PUBLIC WORKS CONSTRUCTION, LATEST EDITION AND SUPPLEMENTS THERETO, AS WRITTEN AND PROMULGATED BY PUBLIC WORKS STANDARDS, INC., HEREINAFTER REFERRED TO AS THE STANDARD SPECIFICATIONS, THE TORRANCE STANDARDS, AND TO THE SATISFACTION OF THE COMMUNITY DEVELOPMENT OR PUBLIC WORKS DIRECTOR.

2. IT SHALL BE THE RESPONSIBILITY OF THE CONTRACTOR TO LOCATE, VERIFY DEPTH AND PROTECT ALL STRUCTURES, INCLUDING SUBSTRUCTURES, SHOWN ON THE PLAN. THE CONTRACTOR SHALL BEAR THE ENTIRE COST OF REPAIRING OR REPLACING ANY OF SAID STRUCTURES DAMAGED BY HIM/HER DURING PROSECUTION OF THE WORK. ALL REPAIRS AND REPLACEMENTS SHALL BE DONE IN THE PRESENCE OF THE INSPECTOR. ALL LOCATIONS SHOWN ON THE PLAN FOR UTILITY LINES HAVE BEEN TAKEN FROM AVAILABLE RECORDS AND THEIR COMPLETENESS AND CORRECTNESS ARE IN NO WAY GUARANTEED.

3. THE CONTRACTOR SHALL NOTIFY UNDERGROUND SERVICE ALERT (USA) AT 1-800-227-2600 AND ALL PUBLIC UTILITY COMPANIES AND OWNERS OF PRIVATE FACILITIES WITHIN THE AREA OF CONSTRUCTION AT LEAST 2 WORKING DAYS IN ADVANCE OF PERFORMING ANY WORK WITHIN SAID AREA.

4. THE CONTRACTOR SHALL OBTAIN ALL NECESSARY PERMITS FROM THE CITY BEFORE COMMENCING WORK. TRAFFIC CONTROL WITHIN PUBLIC STREET RIGHTS OF WAY SHALL BE IN CONFORMANCE WITH THE "WATCH MANUAL" AND "CALIFORNIA MANUAL ON UNIFORM TRAFFIC CONTROL DEVICES (MUTCD CALIFORNIA SUPPLEMENT MANUAL)" LATEST EDITION. THE CONTRACTOR SHALL PROVIDE A 24-HOUR TELEPHONE NUMBER FOR EMERGENCY REPAIRS TO TRAFFIC CONTROL AND PAVEMENT MARKINGS.

5. OVERHEAD UTILITY LINE CAUTION: REVIEW APPROVED CONSTRUCTION PLAN. IF CONSTRUCTION REQUIRES WORKERS AND/OR EQUIPMENT TO BE WITHIN 6 FEET OR CRANES OR HOISTING DEVICES TO BE WITHIN 10 FEET OF OVERHEAD ELECTRIC/UTILITY LINES, CALL SOUTHERN CALIFORNIA EDISON CO. AT 310-783-9336.

6. PRIOR TO COMMENCEMENT OF WORK, ALL SURVEY MONUMENTS IN THE PROJECT AREA SHALL BE LOCATED AND TIED OUT. ALL CENTERLINE MONUMENTS OR TIES LOST OR DESTROYED BY THIS WORK SHALL BE REPLACED EITHER BY A LICENSED SURVEYOR OR A CIVIL ENGINEER REGISTERED PRIOR TO JANUARY 1, 1982 AND NEW TIE SHEETS PROVIDED. METHOD OF ESTABLISHMENT SHALL BE STATED ON THE TIE SHEET.

7. GRADE SHEETS PREPARED AND STAMPED BY A LICENSED ENGINEER OR SURVEYOR SHALL BE DELIVERED TO THE INSPECTOR 24 HRS PRIOR TO COMMENCEMENT OF WORK.

8. THE CONTRACTOR SHALL NOTIFY THE PUBLIC WORKS DEPARTMENT AT 310-781-6900 PRIOR TO TRIMMING, REMOVING OR RELOCATING ANY EXISTING STREET TREES.

9. UNLESS OTHERWISE SHOWN, ALL TRAFFIC SIGNS SHALL BE RELOCATED OR REMOVED BY THE CONTRACTOR.

10. BEFORE BREAKING INTO OR CONSTRUCTION ON A COUNTY SANITATION DISTRICT SEWER AND PRIOR TO FINAL ACCEPTANCE OF THE PROJECT, COUNTY SANITATION DISTRICT INSPECTOR SHALL BE NOTIFIED BY PHONE AT 310-638-1161 IN ORDER THAT REQUIRED INSPECTION MAY BE MADE.

11. EXISTING DOWNSTREAM MANHOLES SHALL BE BULKHEADED WITH BRICK AND MORTAR OR PLUGS APPROVED BY THE INSPECTOR AT NEW INLET DURING CONSTRUCTION OF NEW UPSTREAM LINES. BRICK AND MORTAR OR PLUG SHALL BE REMOVED IN THE PRESENCE OF THE INSPECTOR(S) DURING CLEANING OF THE FIRST UPSTREAM SECTION OF THE NEW SYSTEM.

12. NO CONNECTION FOR THE DISPOSAL OF INDUSTRIAL WASTES SHALL BE MADE TO SEWERS SHOWN ON THESE DRAWINGS UNTIL A PERMIT FOR INDUSTRIAL WASTE WATER DISCHARGE HAS BEEN ISSUED BY THE COUNTY SANITATION DISTRICTS FOR SAID CONNECTION.

13. TRENCHES CUT INTO AN EXISTING ROADWAY WITHIN THE PUBLIC RIGHT OF WAY SHALL BE BACKFILLED AND PAVED AS PER TORRANCE STANDARD T116.

CITY OF TORRANCE

DATE ISSUED	SANITARY SEWER GENERAL NOTES	STANDARD NO.
19 FEB 2008	ROBERT J. BESTE PUBLIC WORKS DIRECTOR R.C.E. NO. 50737	T200
		SHEET 1 OF 2

TT\T200

SANITARY SEWER GENERAL NOTES (CON'T)

14. TRENCH RESURFACING SHALL BE OF THE SAME TYPE AS THE EXISTING PAVEMENT, EXCEPT IF EXISTING PAVEMENT IS A.C. OVER P.C.C., RESURFACING MAY BE FULL-DEPTH A.C.

15. MANHOLE COVER SHALL BE CAST WITH THE WORDS "TORRANCE SEWER" FOR CITY MAINTAINED LINES AND "PRIVATE SEWER" FOR PRIVATELY MAINTAINED LINES.

16. ALL SEWER LINES CONSTRUCTED TO PUBLIC STANDARDS SHALL BE VITRIFIED CLAY PIPE (VCP). DUCTILE IRON PIPE MAY BE USED SUBJECT TO PRIOR WRITTEN APPROVAL FROM THE COMMUNITY DEVELOPMENT/PUBLIC WORKS DIRECTOR. ALL HOUSE CONNECTION LATERALS SHALL BE MINIMUM 6 INCH DIAMETER.

17. CONTRACTOR SHALL SET ALL MANHOLE FRAMES AND COVERS TO FINISHED GRADE.

18. CONCRETE ENCASEMENT SHALL BE REQUIRED FOR SEWER MAIN LINE AND HOUSE LATERALS WITH LESS THAN 3 FEET OF COVER.

19. THE CONTRACTOR SHALL MAKE AVAILABLE FOR THE INSPECTOR'S REVIEW, ON A DAILY BASIS, AS-BUILT DRAWINGS FOR WORK PERFORMED UP TO AND INCLUDING THE PREVIOUS DAY'S ACTIVITIES. WORK SHALL NOT BE CONSIDERED AS COMPLETE UNTIL AS-BUILT DRAWINGS ARE SUBMITTED TO AND ACCEPTED BY THE COMMUNITY DEVELOPMENT/PUBLIC WORKS DIRECTOR.

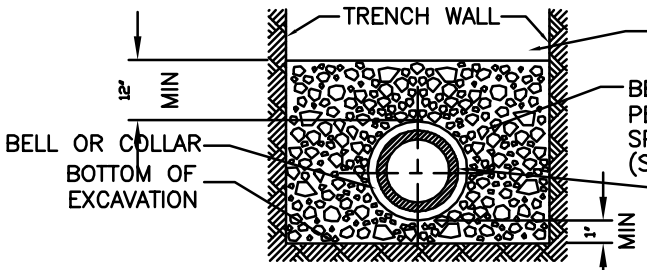

CASE 1: NORMAL TRENCH

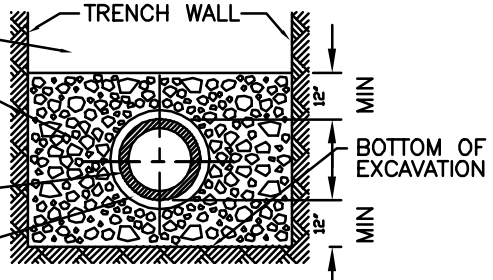

CASE 2: WET, SPONGY GROUND, FILLED GROUND (LESS THAN 90% COMPACTION)

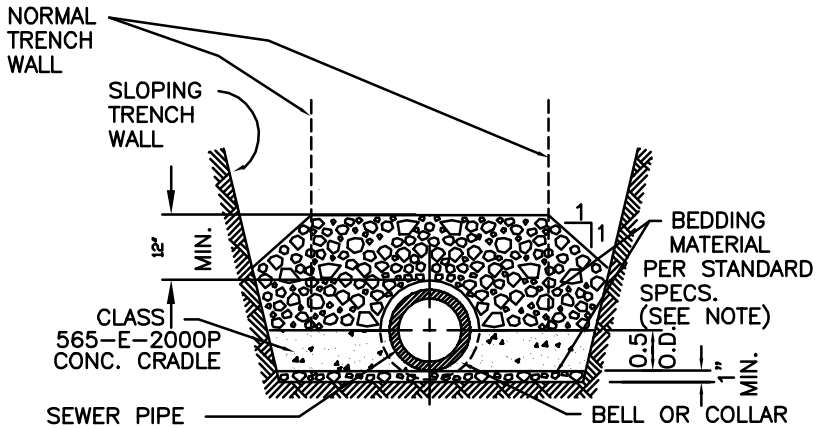

CASE 3: BOTTOM TRENCH WIDTH EXCEEDS THE WIDTH SPECIFIED IN STD. SPECIFICATIONS

NOTE: NATIVE MATERIAL AND SAND ARE UNSUITABLE FOR BEDDING OF 8" OR LARGER PIPES.

CONCRETE REINFORCEMENT FOR SEWER PIPE

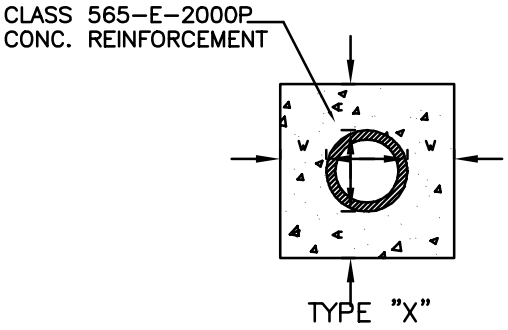

TYPE "X"

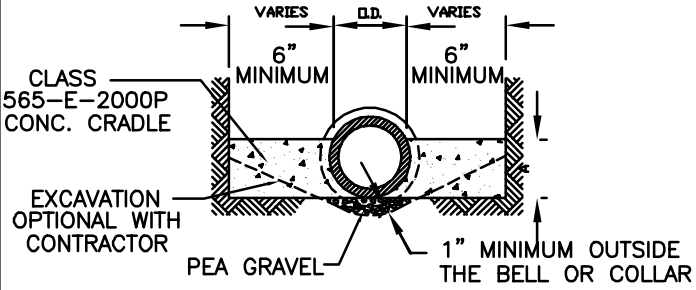

TYPE "Z"

CONCRETE REINFORCEMENT MUST EXTEND TO SOLID BANK

TABLES BELOW INDICATE DIMENSIONS OF CONCRETE FOR DIFFERENT SIZES OF PIPE

TYPE "X"						
			CLAY PIPE		CONCRETE PIPE	
SIZE	W	A	STANDARD STRENGTH	EXTRA STRENGTH	STANDARD STRENGTH	EXTRA STRENGTH
6"	4"	4"	0.051	0.051	0.050	0.050
8"	4"	4"	0.063	0.063	0.063	0.063
10"	4"	4"	0.074	0.074	0.074	0.074
12"	4"	4"	0.086	0.086	0.086	0.091
15"	4"	4"	0.107	0.108	0.107	0.114
18"	5"	5"	0.158	0.166	0.159	0.171

SEE NOTE

TYPE "Z"					
		CLAY PIPE		CONCRETE PIPE	
SIZE	A	STANDARD STRENGTH	EXTRA STRENGTH	STANDARD STRENGTH	EXTRA STRENGTH
6"	5"	0.017	0.017	0.017	0.017
8"	7"	0.024	0.024	0.024	0.024
10"	9"	0.032	0.032	0.032	0.032
12"	10"	0.037	0.037	0.037	0.037
15"	13"	0.050	0.050	0.050	0.050
18"	16"	0.063	0.064	0.063	0.064

SEE NOTE

NOTE: COLUMNS INCLUDED BETWEEN ARROWS IN THE TABLES ABOVE INDICATE CUBIC YARDS OF CONCRETE PER LINEAR FT. OF PIPE.

CITY OF TORRANCE - ENGINEERING DEPARTMENT

DATE ISSUED	BEDDING FOR SEWER PIPE	STANDARD NO.
15 OCT 2000	RICHARD W. BURTT ENGINEERING DIRECTOR R.C.E. NO. 32862	T204-2
		SHEET 1 OF 1

TT/T204-2

GENERAL NOTES

1. ALL WORK SHALL BE DONE IN ACCORDANCE WITH THE STANDARD SPECIFICATIONS FOR PUBLIC WORKS CONSTRUCTION, LATEST EDITION AND SUPPLEMENTS THERETO, AS WRITTEN AND PROMULGATED BY PUBLIC WORKS STANDARDS, INC., HEREINAFTER REFERRED TO AS THE STANDARD SPECIFICATIONS, THE TORRANCE STANDARDS, THE AMERICAN WATER WORKS ASSOCIATION STANDARDS LATEST EDITION, AND TO THE SATISFACTION OF THE COMMUNITY DEVELOPMENT OR PUBLIC WORKS DIRECTOR.

2. IT SHALL BE THE RESPONSIBILITY OF THE CONTRACTOR TO LOCATE, VERIFY DEPTH AND PROTECT ALL STRUCTURES, INCLUDING SUBSTRUCTURES, SHOWN ON THE PLAN. THE CONTRACTOR SHALL BEAR THE ENTIRE COST OF REPAIRING OR REPLACING ANY OF SAID STRUCTURES DAMAGED BY HIM/HER DURING PROSECUTION OF THE WORK. ALL REPAIRS AND REPLACEMENTS SHALL BE DONE IN THE PRESENCE OF THE INSPECTOR. ALL LOCATIONS SHOWN ON THE PLAN FOR UTILITY LINES HAVE BEEN TAKEN FROM AVAILABLE RECORDS AND THEIR COMPLETENESS AND CORRECTNESS ARE IN NO WAY GUARANTEED.

3. THE CONTRACTOR SHALL NOTIFY UNDERGROUND SERVICE ALERT (USA) AT 1-800-227-2600 AND ALL PUBLIC UTILITY COMPANIES AND OWNERS OF PRIVATE FACILITIES WITHIN THE AREA OF CONSTRUCTION AT LEAST 2 WORKING DAYS IN ADVANCE OF PERFORMING ANY WORK WITHIN SAID AREA.

4. THE CONTRACTOR SHALL OBTAIN ALL NECESSARY PERMITS FROM THE CITY BEFORE COMMENCING WORK. TRAFFIC CONTROL WITHIN PUBLIC STREET RIGHTS OF WAY SHALL BE IN CONFORMANCE WITH THE CALIFORNIA MUTCD MANUAL OR CITY OF TORRANCE STANDARDS FOR TRAFFIC CONTROL, LATEST EDITION. THE CONTRACTOR SHALL PROVIDE A 24-HOUR TELEPHONE NUMBER FOR EMERGENCY REPAIRS TO TRAFFIC CONTROL AND PAVEMENT MARKINGS.

5. OVERHEAD UTILITY LINES CAUTION: REVIEW APPROVED CONSTRUCTION PLAN. IF CONSTRUCTION REQUIRES WORKERS AND/OR EQUIPMENT TO BE WITHIN 6 FEET OR CRANES OR HOISTING DEVICES TO BE WITHIN 10 FEET OF OVERHEAD ELECTRIC LINES, CALL SOUTHERN CALIFORNIA EDISON AT 310-783-9336.

6. PRIOR TO COMMENCEMENT OF WORK, ALL SURVEY MONUMENTS IN THE PROJECT AREA SHALL BE LOCATED AND TIED OUT. ALL CENTERLINE MONUMENTS OR TIES LOST OR DESTROYED BY THIS WORK SHALL BE REPLACED EITHER BY A LICENSED SURVEYOR OR A CIVIL ENGINEER REGISTERED PRIOR TO JANUARY 1, 1982 AND NEW TIE SHEETS PROVIDED. METHOD OF ESTABLISHMENT SHALL BE STATED ON THE TIE SHEET.

7. GRADE SHEETS PREPARED AND STAMPED BY A LICENSED ENGINEER OR SURVEYOR SHALL BE DELIVERED TO THE INSPECTOR 24 HOURS PRIOR TO COMMENCEMENT OF WORK.

8. THE CONTRACTOR SHALL NOTIFY THE PUBLIC WORKS DEPARTMENT AT 310-781-6900 PRIOR TO TRIMMING, REMOVING OR RELOCATING ANY EXISTING STREET TREES.

9. UNLESS OTHERWISE SHOWN, ALL TRAFFIC SIGNS SHALL BE RELOCATED OR REMOVED BY THE CONTRACTOR. THE CONTRACTOR SHALL NOTIFY THE PUBLIC WORKS DEPARTMENT AT 310-781-6900 AT LEAST 2 WORKING DAYS IN ADVANCE OF THE WORK.

10. THE CONTRACTOR SHALL DISINFECT WATER LINES UNDER THE DIRECTION OF THE CITY'S WATER QUALITY INSPECTOR. THE TORRANCE MUNICIPAL WATER DEPARTMENT SHALL COLLECT WATER SAMPLES FOR ANALYSIS SUBSEQUENT TO DISINFECTING OF THE PIPELINE BY THE CONTRACTOR.

11. THE CONTRACTOR SHALL NOTIFY THE INSPECTOR AT LEAST TWO WORKING DAYS IN ADVANCE OF A PROPOSED WATER MAIN OR SERVICE LINE SHUT DOWN. THE CONTRACTOR SHALL NOTIFY THE CUSTOMERS EFFECTED BY THE PROPOSED SHUT DOWN AT LEAST 24 HOURS IN ADVANCE. CUSTOMER NOTIFICATION SHALL CONSIST OF A DOOR HANGER SPECIFING THE DATE(S) AND TIME(S) OF THE PROPOSED SHUT DOWN. NOTICE SHALL CONTAIN THE CONTRACTORS NAME AND TELEPHONE NUMBER. NOTICE SHALL BE APPROVED BY THE INSPECTOR PRIOR TO DISTRIBUTION.

12. OPERATION OF VALVES ON ALL PUBLIC WATER LINES AND THE FIRST NEW VALVE DOWNSTREAM OF A PUBLIC WATER MAIN SHALL BE PERFORMED BY THE TORRANCE MUNICIPAL WATER DEPARTMENT UNLESS OTHERWISE SHOWN.

13. ALL WATER LINES SHALL HAVE 42" COVER FROM PROPOSED FINISHED GRADE UNLESS OTHERWISE SHOWN ON THE PLAN.

CITY OF TORRANCE

DATE ISSUED	WATER GENERAL NOTES	STANDARD NO.
12 MAY 2008	ROBERT J. BESTE PUBLIC WORKS DIRECTOR R.C.E. NO. 50737	T700
		SHEET 1 OF 2

TT\T700

GENERAL NOTES (CON'T)

14. FOR PARALLEL CONSTRUCTION ALL WATER LINES SHALL BE INSTALLED WITH A TWO FOOT (MIN.) CLEARANCE FROM EXISTING UTILITY LINES (GAS, TELEPHONE, CABLE, POWER...). A MINIMUM OF 12" CLEARANCE SHALL BE PROVIDED WHEN CROSSING UTILITY LINES.

15. NO PVC PIPE SHALL BE INSTALLED UPSTREAM OF THE INLET SIDE OF METERS OR DETECTOR CHECK VALVES.

16. CONTRACTOR SHALL MAKE AVAILABLE FOR THE PUBLIC WORKS INSPECTOR'S REVIEW, ON A DAILY BASIS, AS-BUILT DRAWINGS FOR WORK PERFORMED UP TO AND INCLUDING THE PREVIOUS DAY'S ACTIVITIES. WORK SHALL NOT BE CONSIDERED AS COMPLETE UNTIL AS-BUILTS ARE SUBMITTED TO AND ACCEPTED BY THE COMMUNITY DEVELOPMENT OR PUBLIC WORKS DIRECTOR.

17. TRENCHES CUT INTO AN EXISTING ROADWAY WITHIN THE PUBLIC RIGHTS OF WAY SHALL BE BACKFILLED AND PAVED AS PER CITY OF TORRANCE STANDARD T116.

18. TRENCH RESURFACING SHALL BE OF THE SAME TYPE AS THE EXISTING PAVEMENT, EXCEPT IF EXISTING PAVEMENT IS A.C. OVER P.C.C., RESURFACING MAY BE FULL-DEPTH A.C.

19. PIPE BEDDING SHALL CONFORM TO TORRANCE STANDARD DRAWING T701.

20. ALL FLANGE NUTS, BOLTS AND WASHERS SHALL BE 316 S.S. UNLESS OTHERWISE SHOWN.

21. ALL BURIED PIPE, VALVES, FITTING, ETC. SHALL BE WRAPPED IN 8 MIL. POLYETHYLENE.

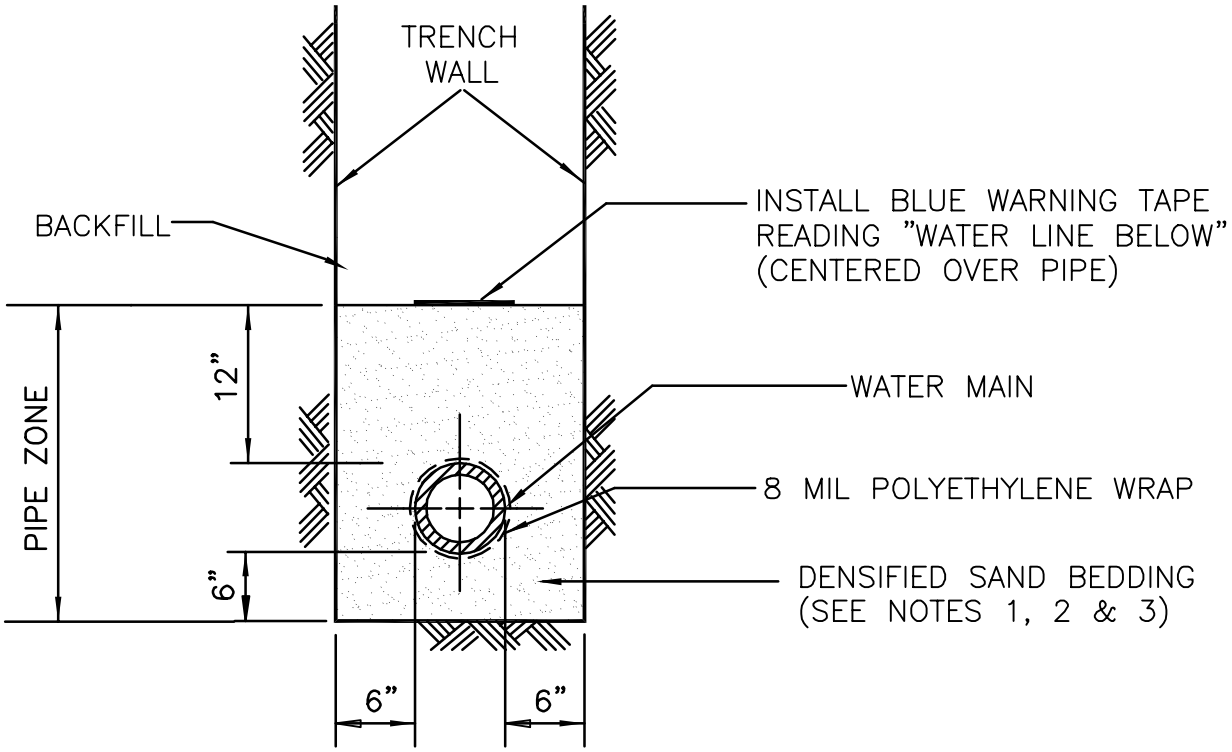

NOTES:

1. SAND BEDDING SHALL CONFORM TO SECTIONS 200–1.5.3 AND 200–1.5.5 OF THE STANDARD SPECIFICATIONS FOR PUBLIC WORKS CONSTRUCTION (LATEST EDITION).
2. DENSIFICATION OF BEDDING SHALL BE ACCOMPLISHED IN CONFORMANCE WITH 306–1.2.1 OF THE STANDARD SPECIFICATIONS FOR PUBLIC WORKS CONSTRUCTION (LATEST EDITION).
3. BEDDING SHALL BE COMPACTED TO 95% OF MAXIMUM DENSITY UNDER STRUCTURES AND 90% ELSEWHERE.

ACCOMPANYING STD.'S T700 AND T116

CITY OF TORRANCE - ENGINEERING DEPARTMENT

DATE ISSUED	**BEDDING FOR WATER PIPE**	STANDARD NO.
16 NOV 1998		**T701-1**
	RICHARD W. BURTT ENGINEERING DIRECTOR R.C.E. NO. 32862	SHEET 1 OF 1

DV/EM/T701–1

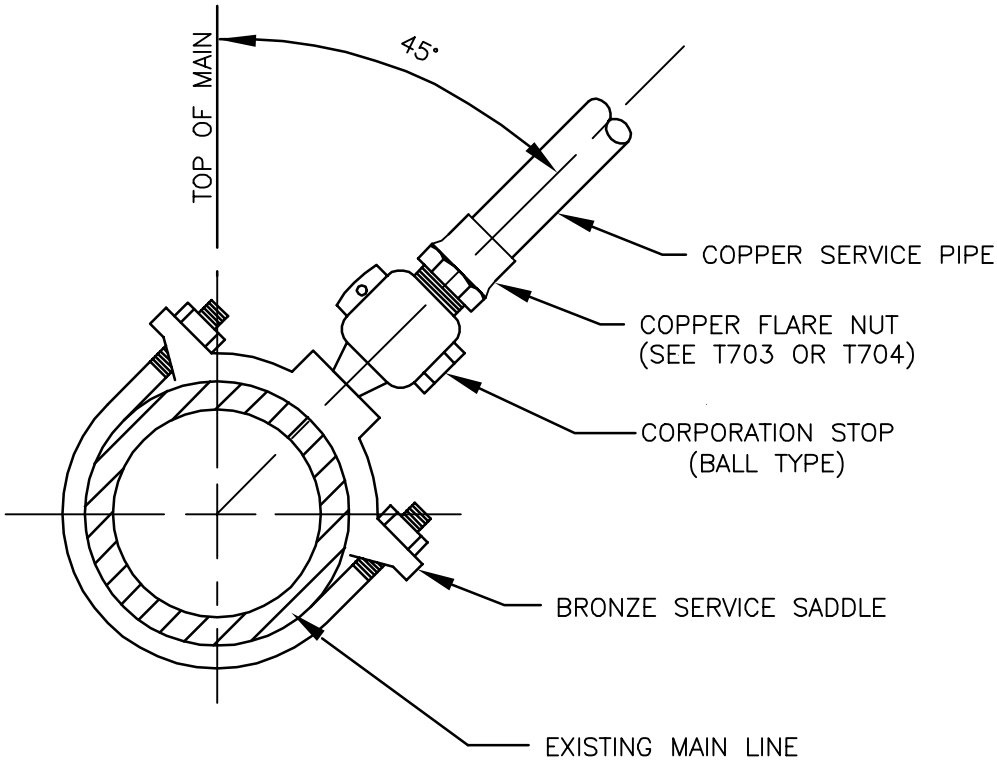

NOTES:

1. FOR ALL 1" SERVICES USE JONES J979 DOUBLE STRAP SADDLE WITH CORPORATION STOP (CC) THREAD.

2. FOR ALL 2" SERVICES USE JONES J979 DOUBLE STRAP SADDLE WITH IRON PIPE THREAD.

3. CORPORATION STOP SHALL BE INSTALLED ON THE MAIN DIRECTLY OPPOSITE THE LOCATION OF THE METER.

4. MINIMUM DISTANCE BETWEEN TAPS OR CONNECTIONS SHALL BE 18 INCHES, AND A MINIMUM OF 18 INCHES FROM END OF PIPE. (FOR DIST. BETWEEN SERVICE TAPS CHECK METER BOX DIMENSIONS ON STD. T703 OR T704.)

5. FOR STEEL MAINS DELETE SERVICE SADDLE. A TAP NOZZLE SHALL BE WELDED TO MAIN AND AN INSULATING BUSHING SHALL BE INSTALLED BETWEEN THE TAP NOZZLE AND THE CORPORATION STOP.

ACCOMPANYING STD.'S T700 AND T703 OR T704.

CITY OF TORRANCE - ENGINEERING DEPARTMENT

DATE ISSUED	1" & 2" SERVICE CONNECTION TO MAIN LINE	STANDARD NO.
16 NOV 1998	RICHARD W. BURTT ENGINEERING DIRECTOR R.C.E. NO. 32862	T702-1 SHEET 1 OF 1

DV/EM/T702-1

ITEM	MATERIALS
1	VALVE BOX ASSEMBLY PER T712.
2	6" VALVE MUELLER NO. A-2360-16 W/EVERDUR STEM & SS 316 FASTENERS W/2" NUT & NRS OPENING CCW.
3	CONCRETE THRUST BLOCK PER T713.
4	RESTRAINED JOINTS
5	6" D.I.P. (CLASS 350) SERVICE LINE
6	FIRE HYDRANT – JAMES JONES CO. J3700 OR J3765 WITH CHAIN & PLASTIC CAPS (SEE NOTE 7).
7	BREAK-OFF CHECK VALVE CLOW VALVE CO. MODEL LB400
8	6" CEMENT LINED FIRE HYDRANT BURY, MJ x FL
9	4'x4'x4" CONCRETE PAD (WHERE LANDSCAPED PARKWAY IS 4' WIDE, PCC PAD SHALL BE EXTENDED FROM BACK OF CURB TO FRONT OF SIDEWALK.
10	MAIN SIZE x 6" M.J. x FLG. D.I. TEE OR TAPPING SLEEVE – MUELLER: H615, H616 OR H619.
11	2-WAY REFLECTING BLUE PAVEMENT MARKER – STIMSONITE 88AB (SEE NOTE 7).

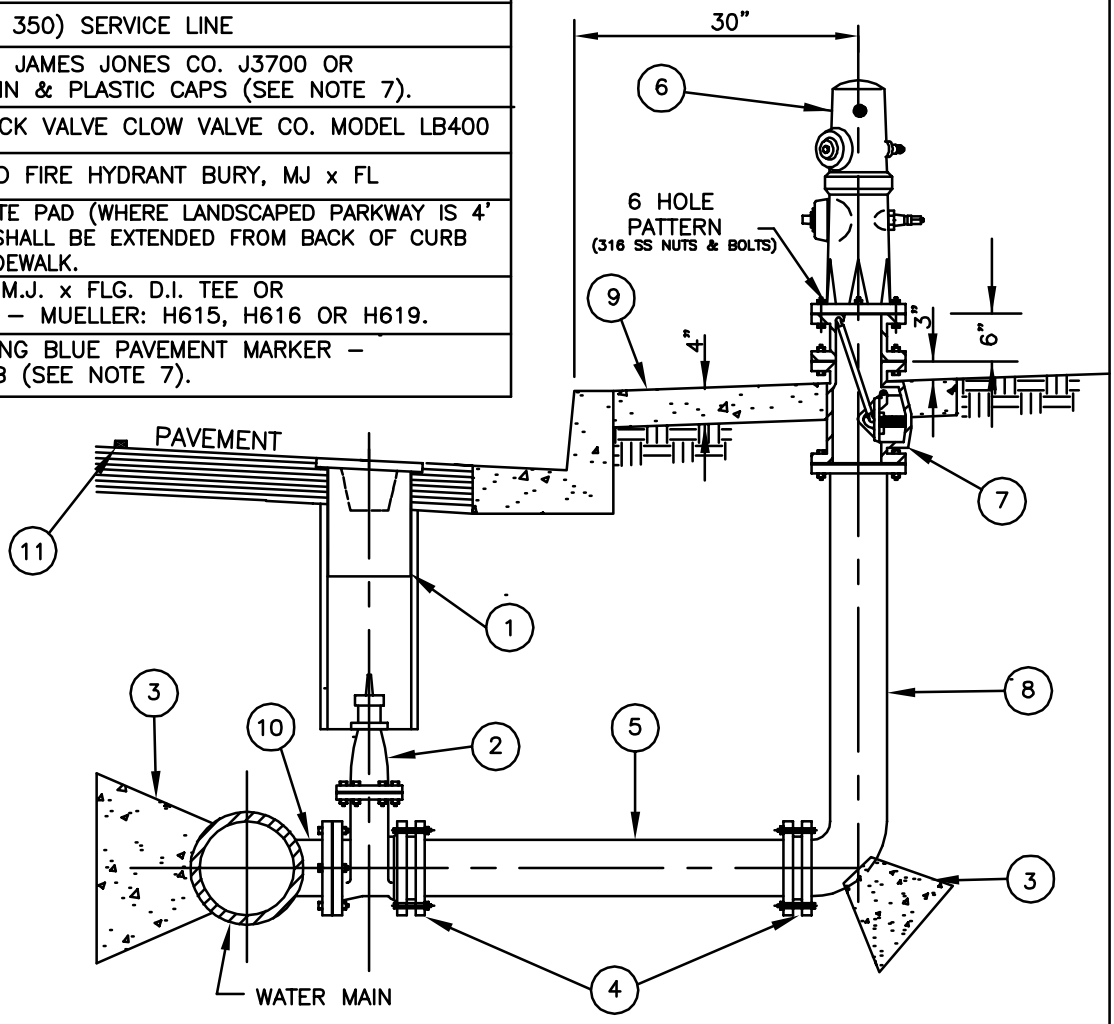

NOTES:

1. SERVICE LINE SHALL BE INSTALLED LEVEL WITH MAINLINE UNLESS SHOWN OTHERWISE ON PLAN.
2. ALL UNDERGROUND FERROUS SURFACES SHALL BE PROTECTED IN ACCORDANCE WITH THE SPECIFICATIONS. ALL FLG. BOLTS AND NUTS SHALL BE 316 STAINLESS STEEL UNLESS OTHERWISE SPECIFIED.
3. ALL PARTS OF THE FACILITY ABOVE GROUND SHALL BE PAINTED IN ACCORDANCE WITH THE SPECIFICATIONS. COLOR OF HYDRANT SHALL BE "RUSTOLEUM" 76-44 SAFETY YELLOW.
4. FIRE HYDRANTS SHALL BE LOCATED 5 FEET MIN. FROM DRIVEWAYS OR OTHER OBSTRUCTIONS. NO FIRE HYDRANTS SHALL BE LOCATED IN THE CURB RADIUS.
5. ALL BURIED PIPE, VALVES, FITTING ETC... SHALL BE WRAPPED IN 8MIL POLYETHYLENE, IN ACCORDANCE WITH THE SPECIFICATIONS.
6. USE J3765 IN COMMERCIAL OR INDUSTRIAL AREAS AND ALONG MAJOR STREETS.
7. PLACE MARKERS SIX INCHES FROM CENTER OF ROADWAY OR PAINTED CENTERLINE ON SIDE NEAREST THE HYDRANT.

ACCOMPANYING STD'S T700, T701, T712, T713, AND T723

CITY OF TORRANCE - ENGINEERING DEPARTMENT

DATE ISSUED	TYPICAL FIRE HYDRANT INSTALLATION FOR NON-LOCAL STREETS OR HIGH PRESSURE ZONE	STANDARD NO.
23 JUL 2002	RICHARD W. BURTT ENGINEERING DIRECTOR R.C.E. NO. 32862	T706-3
		SHEET 1 OF 1

EM/T706-3

ITEM	DESCRIPTION
1	KUPFERLE TRUFLO MODEL TF550 BLOW-OFF HYDRANT W/2" FIP INLET
2	2" ADAPTOR – 2" MIP x SJ
3	2" COPPER TYPE K TUBING
4	2" FIP BALL VALVE – FORD B11-777 OR JONES J-1900
5	2" BRASS STREET ELBOW
6	VALVE BOX ASSEMBLY (SEE T712) MOD.
7	2" BRASS NIPPLE AS REQUIRED
8	CONC. THRUST BLOCK PER T713
9	PIPE SIZE C.I. M.J. CAP W/2" IP DRILLED & TAPPED HOLE
10	2" 90° ELBOW – COPPER TO COPPER SJxSJ

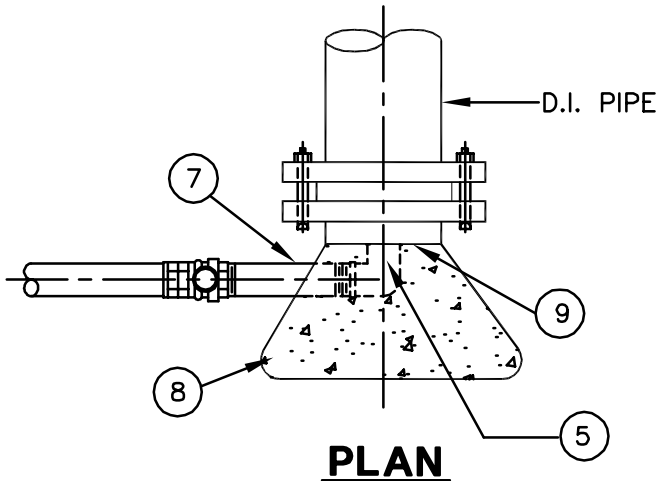

PLAN

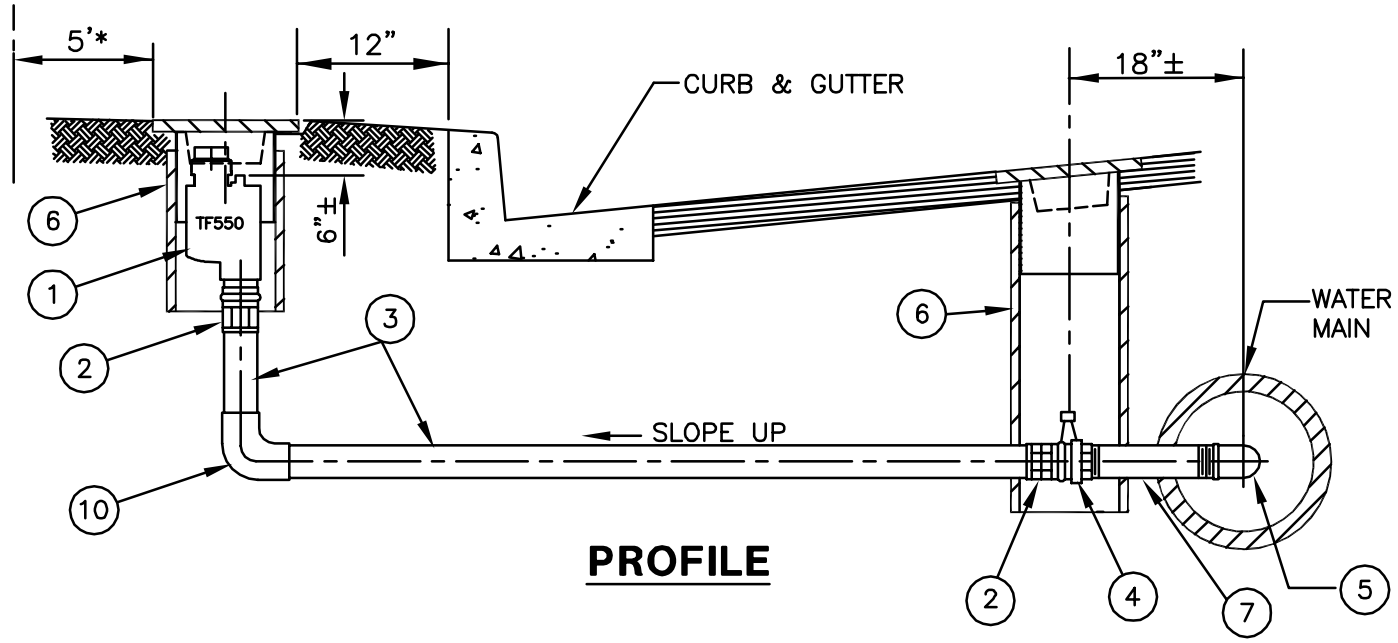

PROFILE

* WHERE THERE IS NO CURB, THE BLOW-OFF BOX SHALL BE SET 5' CLEAR OF PROPERTY LINE.

ACCOMPANYING STD'S T700, T701, T712 AND T713

CITY OF TORRANCE - ENGINEERING DEPARTMENT

DATE ISSUED		STANDARD NO.
23 JUL 2002	**2" BLOW-OFF ASSEMBLY**	**T707-2**
	RICHARD W. BURTT ENGINEERING DIRECTOR R.C.E. NO. 32862	SHEET 1 OF 1

EM/T707-2

ACCOMPANYING STD'S T700, T702, T712 AND T116

CITY OF TORRANCE - ENGINEERING DEPARTMENT

AIR AND VACUUM RELEASE VALVE

DATE ISSUED
1 SEPT 2000

RICHARD W. BURTT
ENGINEERING DIRECTOR
R.C.E. NO. 32862

STANDARD NO.
T708-2

SHEET 1 OF 1

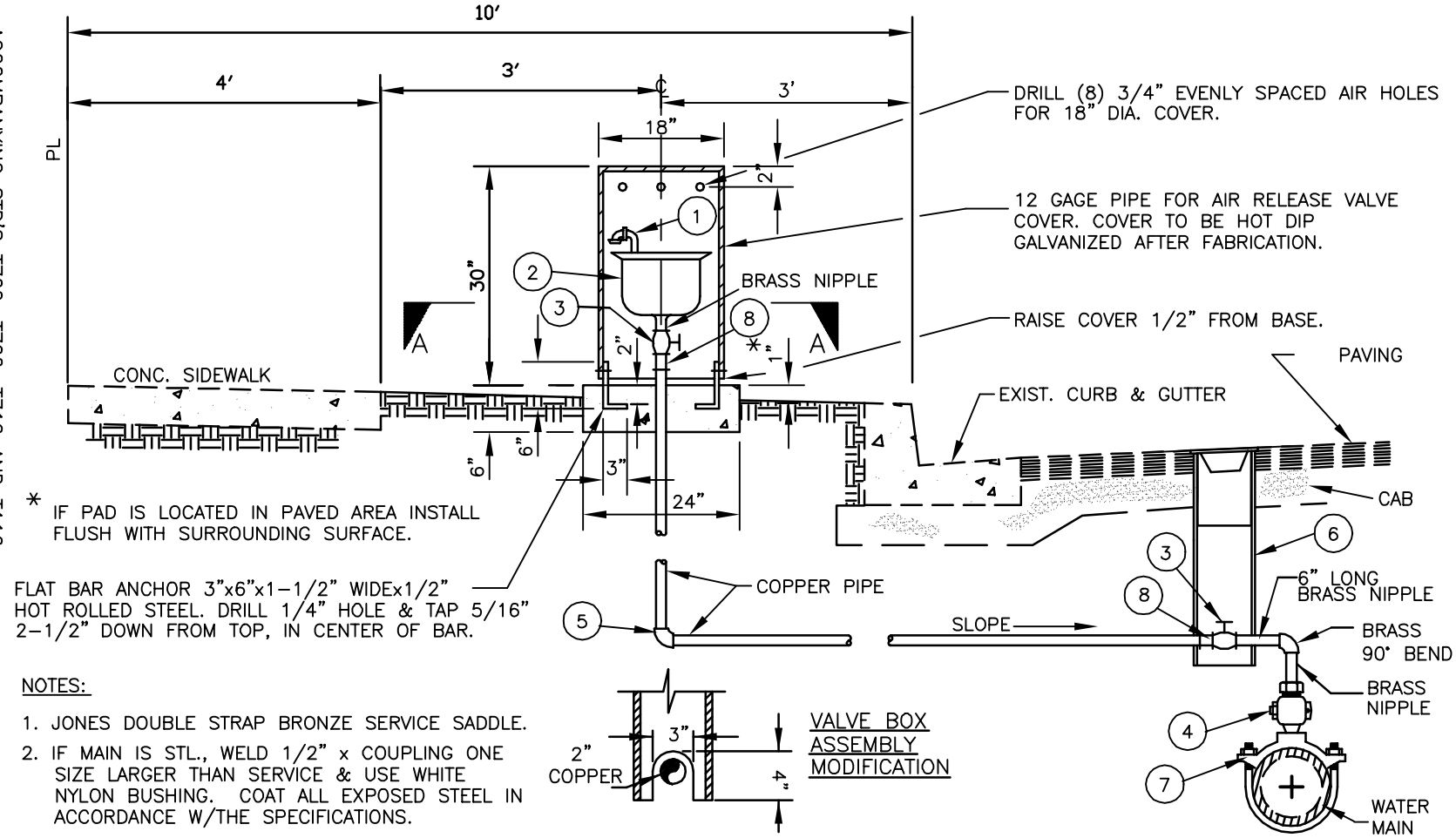

NOTES:

1. JONES DOUBLE STRAP BRONZE SERVICE SADDLE.
2. IF MAIN IS STL., WELD 1/2" x COUPLING ONE SIZE LARGER THAN SERVICE & USE WHITE NYLON BUSHING. COAT ALL EXPOSED STEEL IN ACCORDANCE W/THE SPECIFICATIONS.

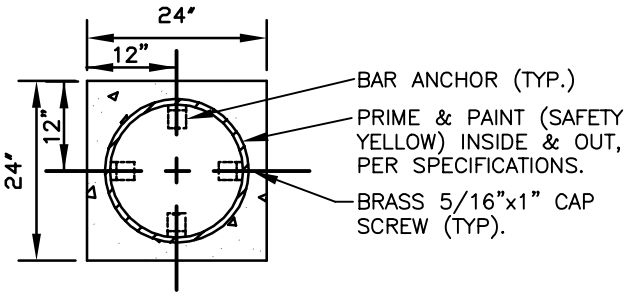

SECTION A-A

VALVE & PIPE OMITTED FOR CLARITY

COMBINATION AIR & VACUUM RELEASE VALVE
*(FOR MAIN SIZE >= 16" USE 2", FOR MAIN SIZE < 16", USE 1")

ITEM	PART NO.		*SIZE	DESCRIPTION
1			1" OR 2"	NIPPLE & (2) 90° STEEL ELBOWS WITH SS SCREEN
2	143C APCO	UL10 CRISPIN	1"	COMBINATION AIR & VACUUM RELEASE VALVE
	145C APCO	UL20 CRISPIN	2"	
3	B11-444(FORD)	J-1900(JONES)	1"	BALL VALVE, FIPxFIP
	B11-777(FORD)	J-1900(JONES)	2"	
4	FB 1700-4(FORD)	J-1931(JONES)	1"	CORPORATION STOP, MIPxFIP
	FB 1700-7(FORD)	J-1961(JONES)	2"	
5			1" OR 2"	90° COPPER ELBOW, SJXSJ
6				VALVE BOX ASSEMBLY (SEE T712) MOD.
7	J979		1" OR 2" IP	JONES SERVICE SADDLE-DOUBLE STRAP
8			1" OR 2"	SJ x MALE IP

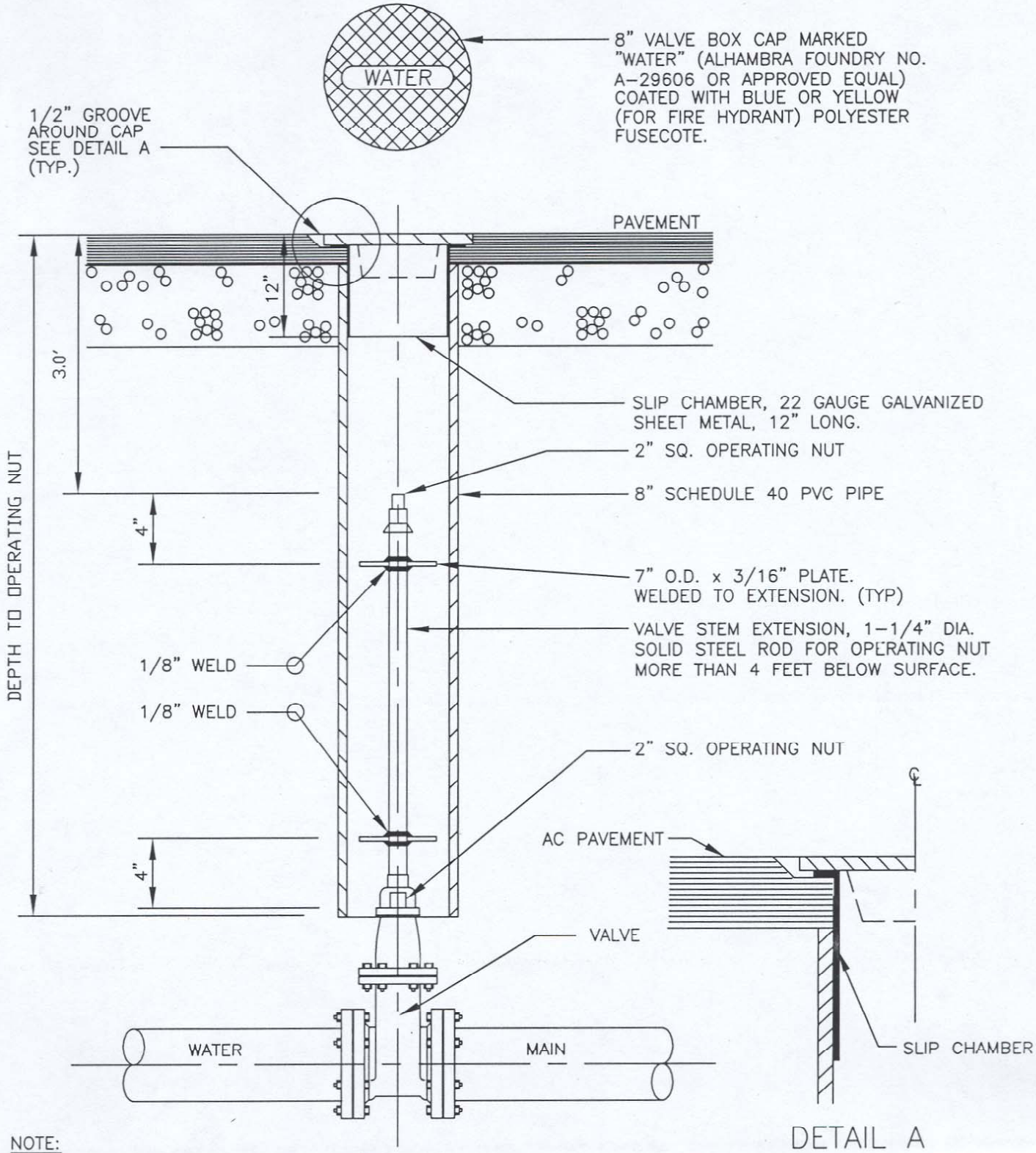

DETAIL A
NOT TO SCALE

NOTE:

VALVE STEM EXTENSION SHALL BE PROVIDED WHERE DEPTH TO OPERATING NUT EXCEEDS 4'-0".

ACCOMPANYING STD. T700 AND T701

CITY OF TORRANCE		
DATE ISSUED 11 DEC 2006	**VALVE BOX ASSEMBLY** ROBERT J. BESTE PUBLIC WORKS DIRECTOR R.C.E. NO. 50737	STANDARD NO. **T712** SHEET 1 OF 1

EM/T712-3

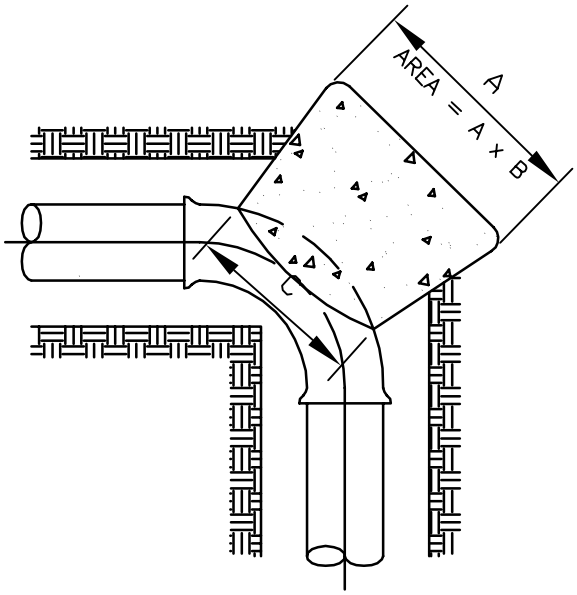

90 BEND

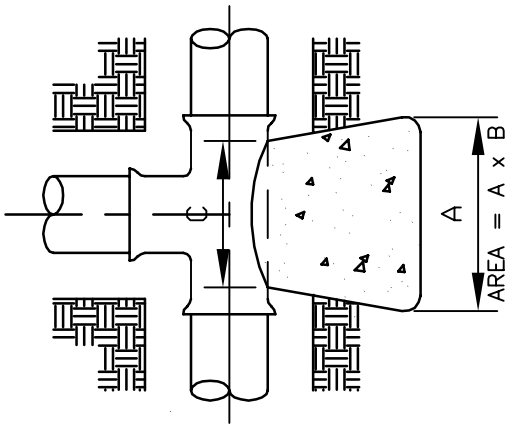

TEE

EXPOSED PORTION OF RE-BARS SHALL BE FIELD COATED W/TAR TO PREVENT CORROSION. MAKE BLOCK FULL WIDTH OF TRENCH.

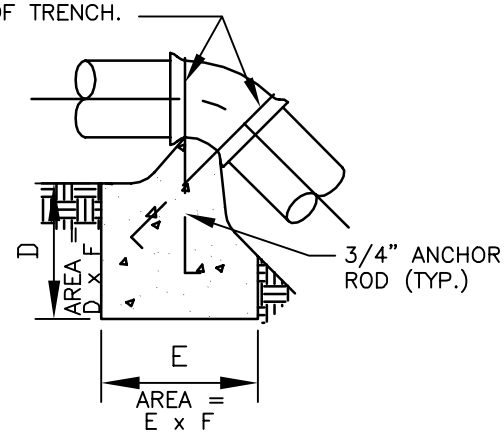

VERTICAL BEND

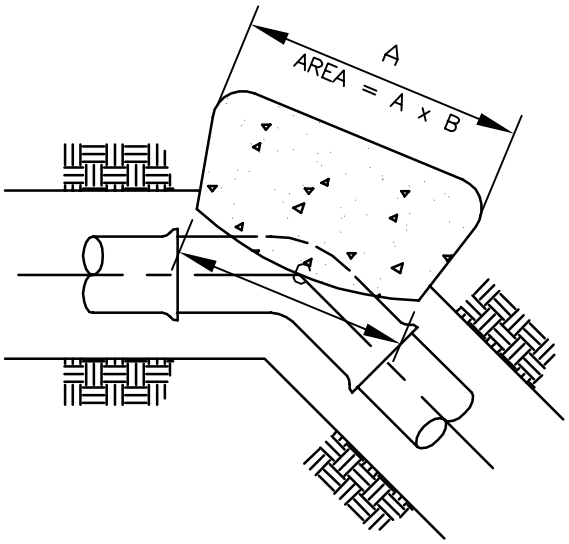

BEND

NOTE:

1) B = DEPTH
2) SEE SHEET 2 FOR THRUST BLOCK SCHEDULE AND NOTES.

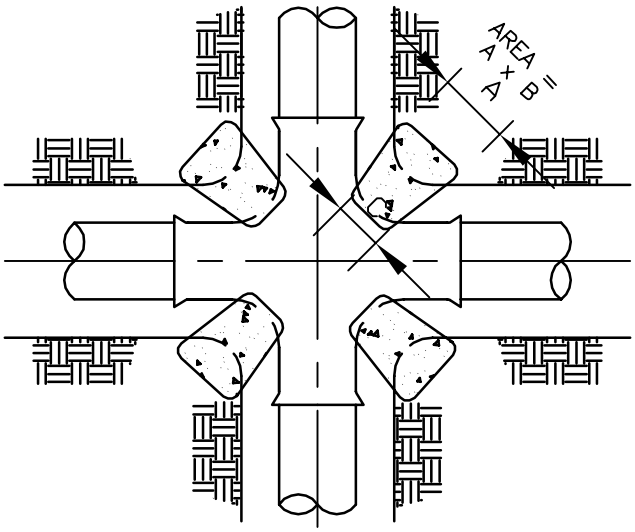

CROSS

CITY OF TORRANCE - ENGINEERING DEPARTMENT

DATE ISSUED	CONCRETE THRUST BLOCK	STANDARD NO.
16 NOV 1998	RICHARD W. BURTT ENGINEERING DIRECTOR R.C.E. NO. 32862	T713-1 SHEET 1 OF 2

DV/EM/T713-1

VERTICAL BENDS														
NOMINAL PIPE SIZE (INCHES)	TEST PRESSURE (PSI)	BENDS LESS THAN OR EQUAL TO ANGLE												ALL BENDS
		11–1/4°			22–1/2°			45°			90°			
		D	E	F	D	E	F	D	E	F	D	E	F	C
6"	200	1'–6"	3'–0"	1'–0"	2'–0"	4'–0"	1'–0"	3'–0"	5'–6"	1'–0"	4'–0"	7'–0"	2'–0"	8"
8"	200	2'–0"	4'–0"	1'–0"	2'–6"	5'–0"	1'–0"	3'–6"	7'–0"	2'–0"	5'–0"	10'–0"	3'–6"	10"
10"	200	2'–0"	4'–6"	1'–0"	3'–0"	6'–0"	1'–6"	4'–0"	9'–0"	3'–0"	6'–0"	12'–0"	5'–0"	1'–0"
12"	200	2'–6"	5'–0"	1'–0"	3'–6"	7'–0"	2'–0"	5'–0"	10'–0"	4'–0"	7'–0"	14'–0"	7"–0"	1'–0"

HORIZONTAL BENDS																
NOMINAL PIPE SIZE (INCHES)	TEST PRESSURE (PSI)	DEAD ENDS AND TEES			CROSSES			BENDS LESS THAN OR EQUAL TO ANGLE								ALL BENDS
								11–1/4°		22–1/2°		45°		90°		
		A	B	C	A	B	C	A	B	A	B	A	B	A	B	C
6"	200	2'–6"	1'–6"	6"	2'–0"	1'–0"	6"	1'–0"	1'–0"	2'–0"	1'–0"	3'–0"	1'–0"	3'–6"	1'–6"	8"
8"	200	4'–6"	1'–6"	8"	2'–0"	1'–6"	8"	1'–6"	1'–0"	3'–0"	1'–0"	3'–6"	1'–6"	5'–0"	2'–0"	10"
10"	200	5'–6"	2'–0"	10"	2'–6"	2'–0"	10"	2'–0"	1'–0"	3'–0"	1'–6"	4'–0"	2'–0"	6'–0"	2'–6"	1'–0"
12"	200	7'–6"	2'–0"	1'–0"	3'–6"	2'–0"	1'–0"	2'–0"	1'–6"	3'–0"	2'–0"	4'–6"	2'–6"	7'–0"	3'–0"	1'–0"

NOTES:

1. THRUST BLOCK SIZES ARE BASED ON A BEARING CAPACITY OF 1500 P.S.F., WITH A MINIMUM SOIL COVER OF 3'–0".
   FOR SOIL COVER OF 2'–0" TO 3'–0", MULTIPLY BEARING AREA BY A FACTOR OF 1.5
   FOR SOIL COVER OF 1'–0" TO 2'–0", MULTIPLY BEARING AREA BY A FACTOR OF 3
2. DIMENSIONS SHOWN REFER TO THRUST BLOCK TYPES SHOWN ON DETAIL, AND ARE MINIMUM VALUES ONLY.
3. CONCRETE MIX SHALL CONFORM TO SPECIFICATIONS FOR 3000 LBS. STRENGTH AT 28 DAYS WHEN TESTED IN ACCORDANCE WITH ASTM C39.
4. ALL THRUST BLOCKS SHALL BE POURED SOLIDLY AGAINST FIRM, UNDISTURBED SOIL.
5. CONTRACTOR SHALL NOTIFY THE ENGINEERING DIRECTOR IF SOILS HAVE BEEN PREVIOUSLY EXCAVATED AND BACKFILLED. THE DIRECTOR MAY REQUIRE THAT THE DIMENSIONS SHOWN BE INCREASED BY A FACTOR OF 1.5.
6. CONCRETE POURED AGAINST PIPE FITTINGS SHALL BE PLACED SO THAT VALVES AND FITTINGS ARE ACCESSIBLE FOR REPAIR.
7. WHERE WATER MAIN DEAD ENDS ARE BLIND FLANGED OR CAPPED, THE THRUST BLOCK SHALL EXTEND A MINIMUM DISTANCE OF 6" INTO BOTH SIDES OF THE TRENCH.

ACCOMPANYING STD. T700

CITY OF TORRANCE - ENGINEERING DEPARTMENT

DV/EM/T713–1

DATE ISSUED	THRUST BLOCK SCHEDULE	STANDARD NO.
16 NOV 1998	RICHARD W. BURTT ENGINEERING DIRECTOR R.C.E. NO. 32862	T713-1 SHEET 2 OF 2

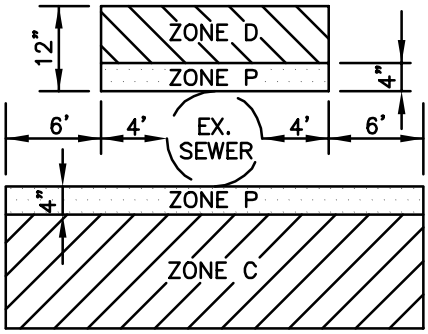

PERPENDICULAR CONSTRUCTION

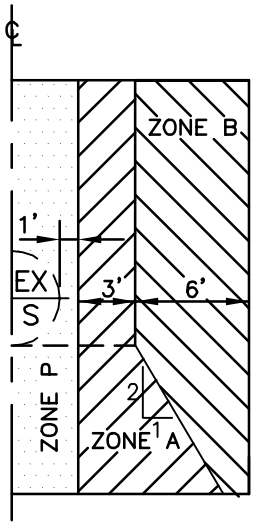

PARALLEL CONSTRUCTION

CITY OF TORRANCE - ENGINEERING DEPARTMENT

DATE ISSUED	WATER AND SEWER SEPARATION REQUIREMENTS	STANDARD NO.
16 NOV 1998	RICHARD W. BURTT ENGINEERING DIRECTOR R.C.E. NO. 32862	T714-1
		SHEET 1 OF 2

DV/EM/T714-1

BASIC SEPARATION STANDARDS

1. PARALLEL CONSTRUCTION: THERE SHALL BE AT LEAST 10 FEET HORIZONTAL CLEARANCE BETWEEN PRESSURE DOMESTIC WATER AND RECLAIMED WATER MAINS AND SEWER LINES.

2. PERPENDICULAR CONSTRUCTION (CROSSING): PRESSURE WATER MAINS SHALL BE AT LEAST ONE FOOT ABOVE SANITARY SEWER AND RECLAIMED WATER LINES WHERE THESE LINES MUST CROSS.

3. SPECIAL PROVISIONS: ALTERNATIVE CONSTRUCTION CRITERIA WHERE THE BASIC SEPARATION STANDARDS CANNOT BE ATTAINED ARE SHOWN BELOW:

ZONE	WATER CONSTRUCTION (EXISTING SEWER)
B	1) CLASS 350 D.I.P. WATER MAIN. 2) APPROVED ALTERNATIVES.
C/D	1) CLASS 350 D.I.P. WATER MAIN W/NO JOINT 2) STEEL CASING PER STD. T715 3) APPROVED ALTERNATIVES
A	NO CONSTRUCTION WITHOUT APPROVAL OF TORRANCE MUNICIPAL WATER DEPARTMENT AND STATE OF CALIFORNIA DEPARTMENT OF HEALTH SERVICES.
P	CONSTRUCTION WITHIN THIS AREA PROHIBITED.

ACCOMPANYING STD.'S T700 AND T715.

CITY OF TORRANCE - ENGINEERING DEPARTMENT

DATE ISSUED
16 NOV 1998

WATER AND SEWER SEPARATION REQUIREMENTS

RICHARD W. BURTT
ENGINEERING DIRECTOR
R.C.E. NO. 32862

STANDARD NO.
T714-1
SHEET 2 OF 2

DV/EM/T714-1

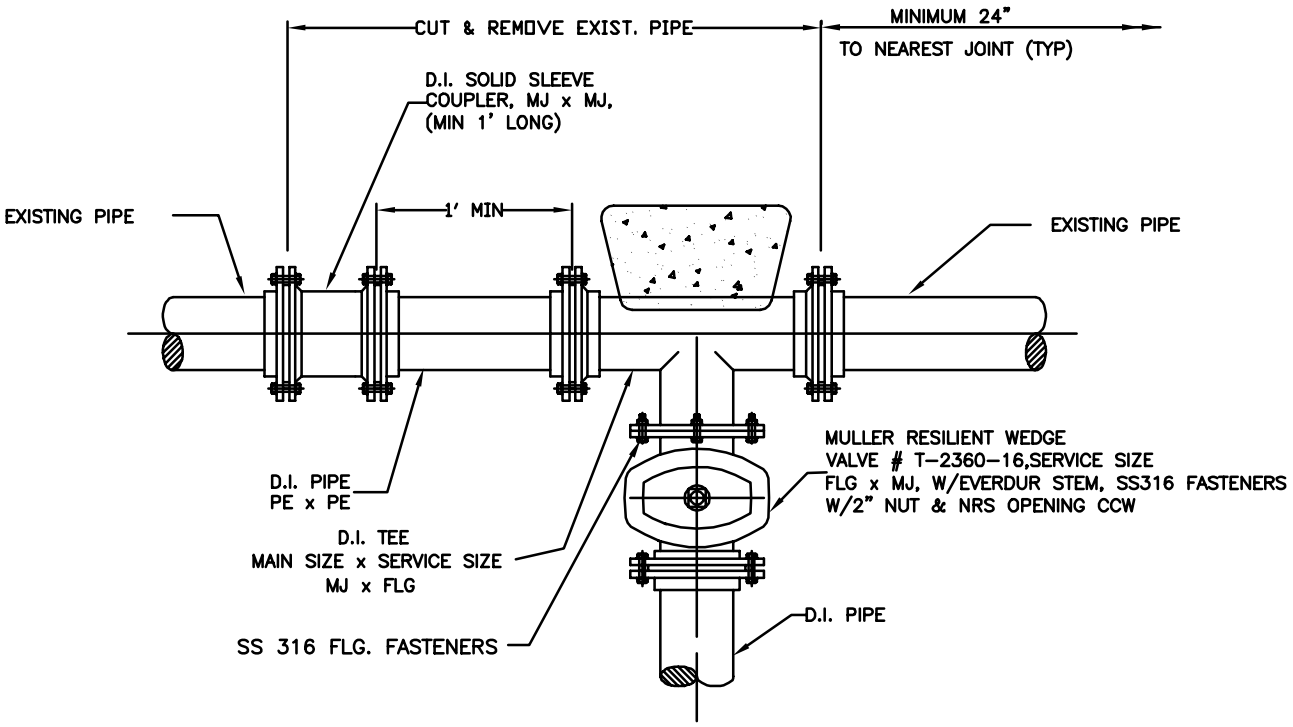

CUT IN METHOD

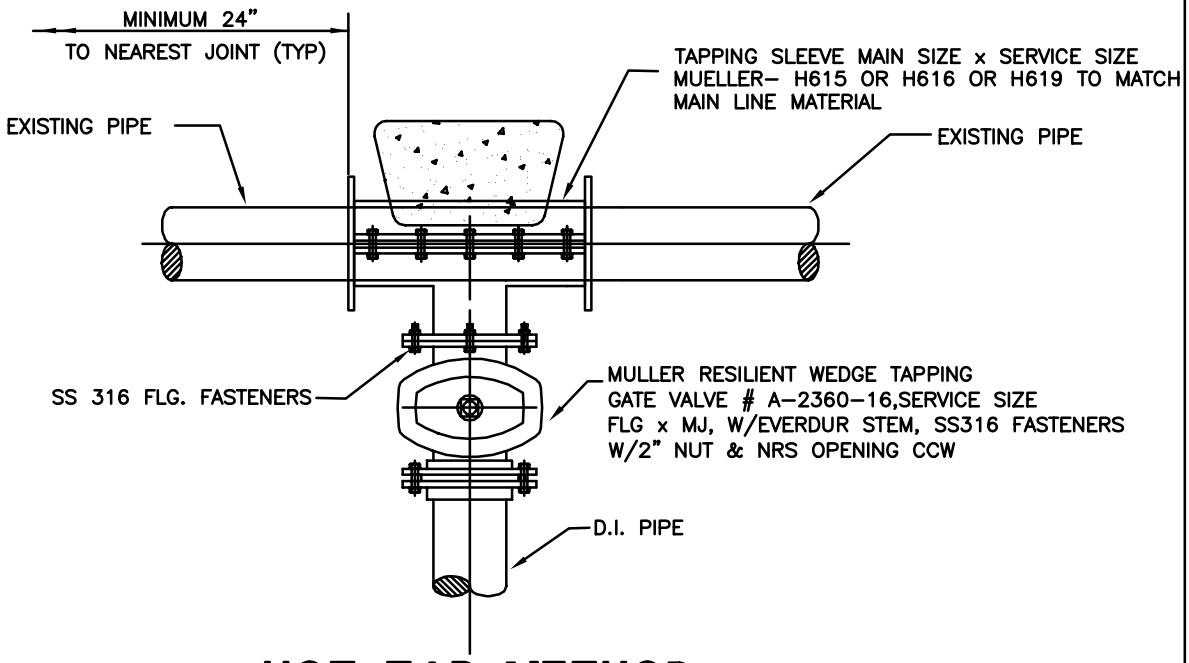

HOT TAP METHOD

ACCOMPANYING STD. T700, T701, T705, T706, T710, T712, T713, T717, T718, T719, T720, AND T721

CITY OF TORRANCE - ENGINEERING DEPARTMENT

DATE ISSUED	D.I. CONNECTION TO MAIN	STANDARD NO.
1 SEPT 2000	RICHARD W. BURTT ENGINEERING DIRECTOR R.C.E. NO. 32862	T723-2 SHEET 1 OF 1

EM/T723-2

APPENDIX III

SPPWC STANDARD PLANS

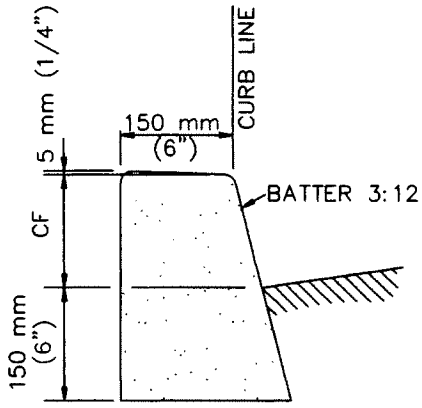

A1–150(6) AND
A1–200(8)

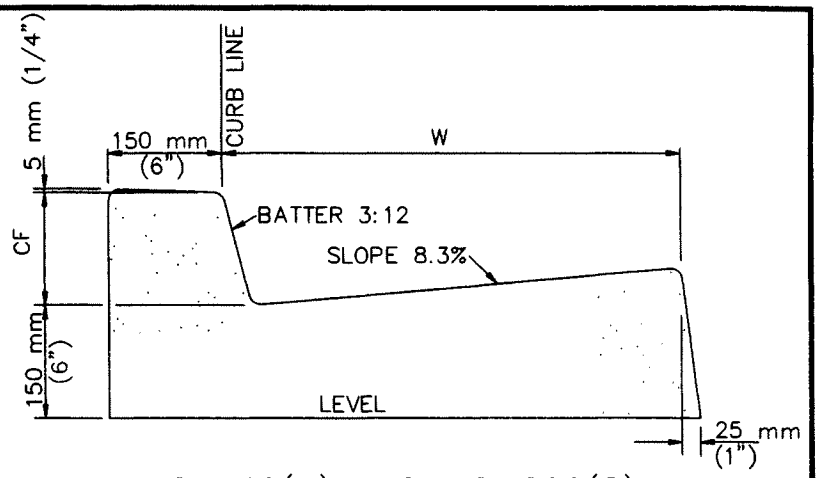

A2–150(6) AND A2–200(8)

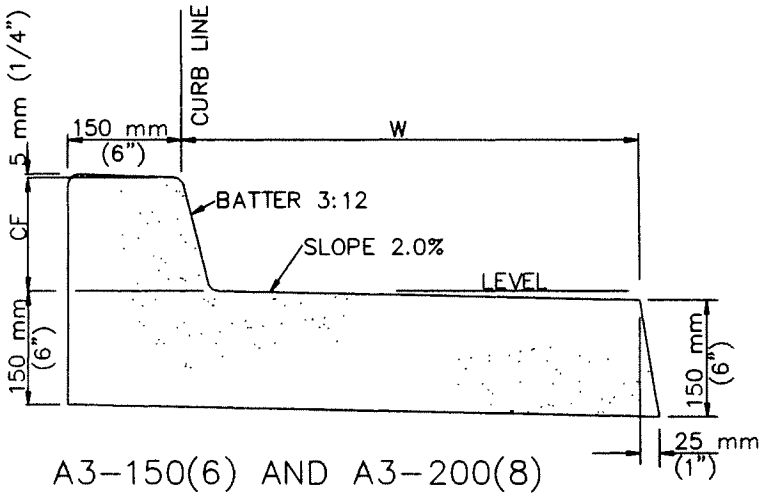

A3–150(6) AND A3–200(8)

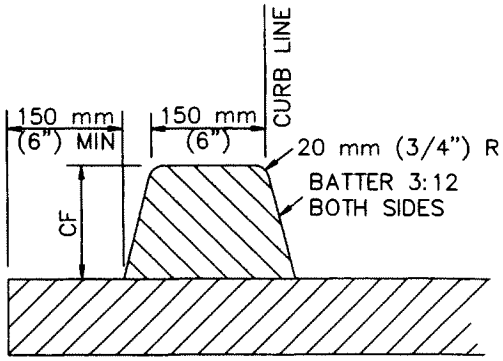

D1–150(6) AND
D1–200(8)

NOTES:

1. THE LAST NUMBER IN THE DESIGNATION IS THE CURB FACE (CF) HEIGHT, mm (INCHES).
2. GUTTER WIDTH, W, IS 600 mm (24") UNLESS OTHERWISE SPECIFIED.
3. TYPES A1, A2, A3 AND C1 SHALL BE CONSTRUCTED FROM PCC.
4. TYPE D1 CURB SHALL BE CONSTRUCTED FROM ASPHALT CONCRETE.
5. TYPE C1 CURB SHALL BE ANCHORED WITH STEEL DOWELS AS SHOWN OR WITH AN EPOXY APPROVED BY THE ENGINEER.
6. ALL EXPOSED CORNERS ON PCC CURBS AND GUTTERS SHALL BE ROUNDED WITH A 15 mm (1/2") RADIUS.

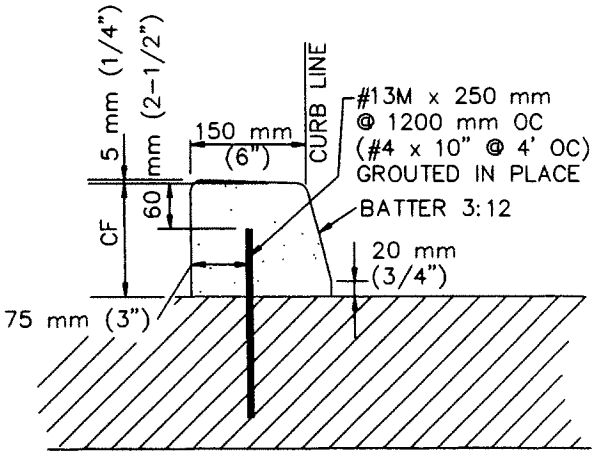

C1–150(6) AND C1–200(8)

STANDARD PLAN FOR PUBLIC WORKS CONSTRUCTION

PROMULGATED BY THE PUBLIC WORKS STANDARDS INC. GREENBOOK COMMITTEE 1984 REV. 1996

CURB AND GUTTER – BARRIER

USE WITH STANDARD SPECIFICATIONS FOR PUBLIC WORKS CONSTRUCTION

STANDARD PLAN METRIC
120–1
SHEET 1 OF 1

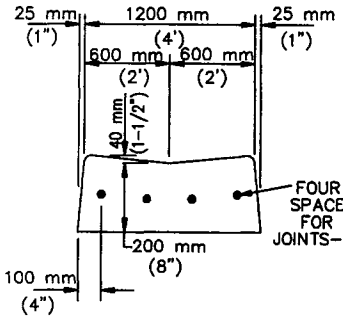

LONGITUDINAL GUTTER

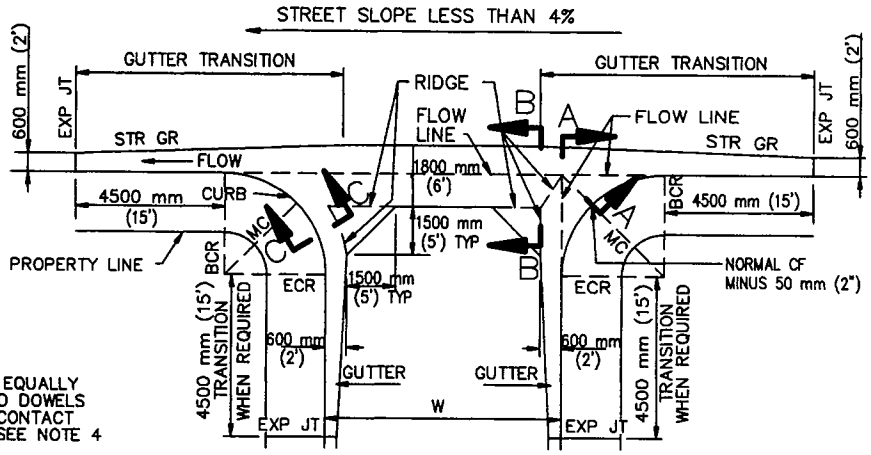

TYPICAL CROSS GUTTER PLAN
STREET SLOPE LESS THAN 4%

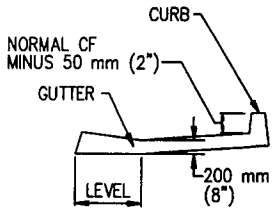

SECTION A–A

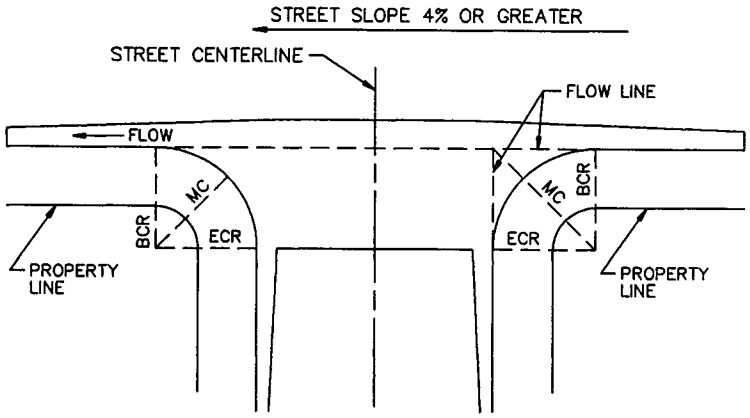

TYPICAL CROSS GUTTER PLAN
STREET SLOPE MORE THAN 4%

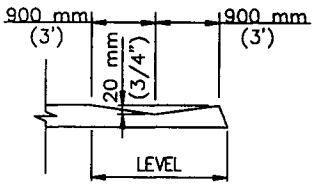

SECTION B–B

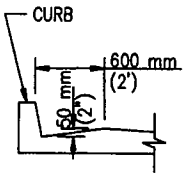

SECTION C–C

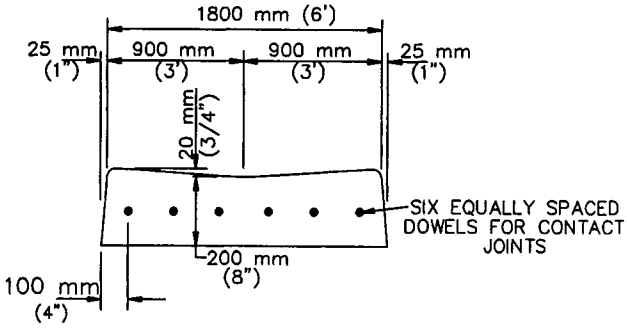

SECTION D–D

STANDARD PLANS FOR PUBLIC WORKS CONSTRUCTION

PROMULGATED BY THE PUBLIC WORKS STANDARDS INC. GREENBOOK COMMITTEE 1984 REV. 1996

CROSS AND LONGITUDINAL GUTTERS

USE WITH STANDARD SPECIFICATIONS FOR PUBLIC WORKS CONSTRUCTION

STANDARD PLAN METRIC
122–1
SHEET 1 OF 2

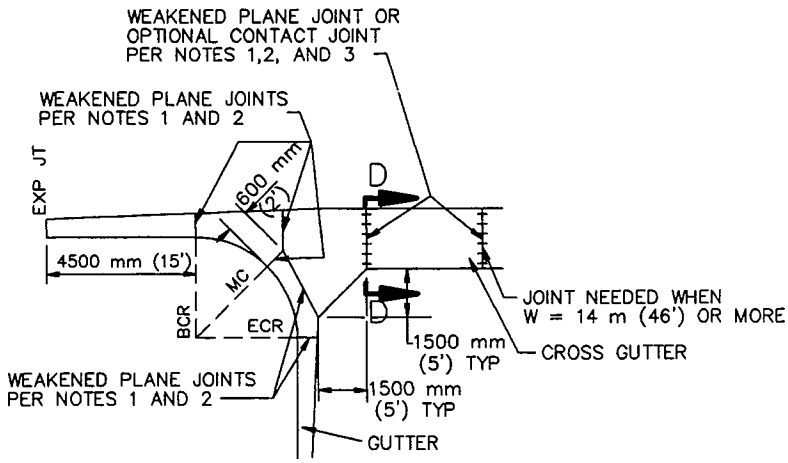

TYPICAL JOINT PLAN

NOTES:

1. WEAKENED PLANE AND/OR CONTACT JOINTS SHALL BE PLACED IN CURB AND GUTTER AT LOCATIONS SHOWN ON THE TYPICAL JOINT PLAN HEREON.
2. WEAKENED PLANE JOINTS SHALL BE PLASTIC CONTROL JOINTS OR 40 mm (1-1/2") DEEP SAW CUTS. CONCRETE SAWING SHALL TAKE PLACE WITHIN 24 HOURS AFTER CONCRETE IS PLACED.
3. DOWELS FOR CONTACT JOINTS SHALL BE #13M BARS 450 mm LONG (#4 BARS 18" LONG).
4. PLACE A WEAKENED PLANE OR CONTACT JOINT WHERE LONGITUDINAL ALLEY GUTTER JOINS CONCRETE ALLEY INTERSECTION.
5. ALL EXPOSED CORNERS ON PCC GUTTERS SHALL BE ROUNDED WITH 15 mm (1/2") RADIUS.
6. CONCRETE SHALL BE INTEGRAL WITH CURB UNLESS OTHERWISE SPECIFIED.

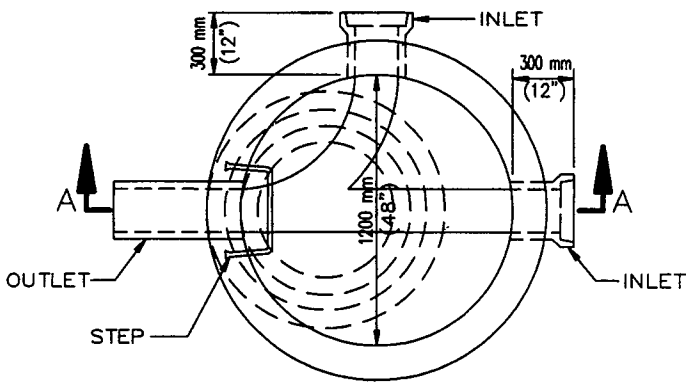

PLAN
SHOWING BASE

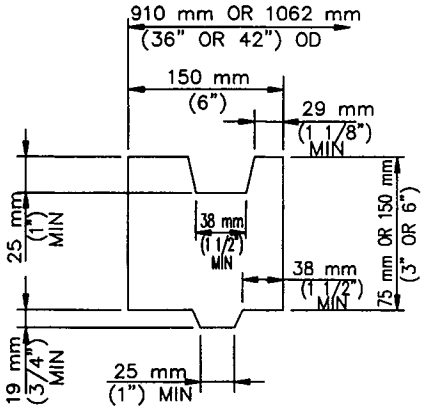

ADJUSTING
RING DETAIL

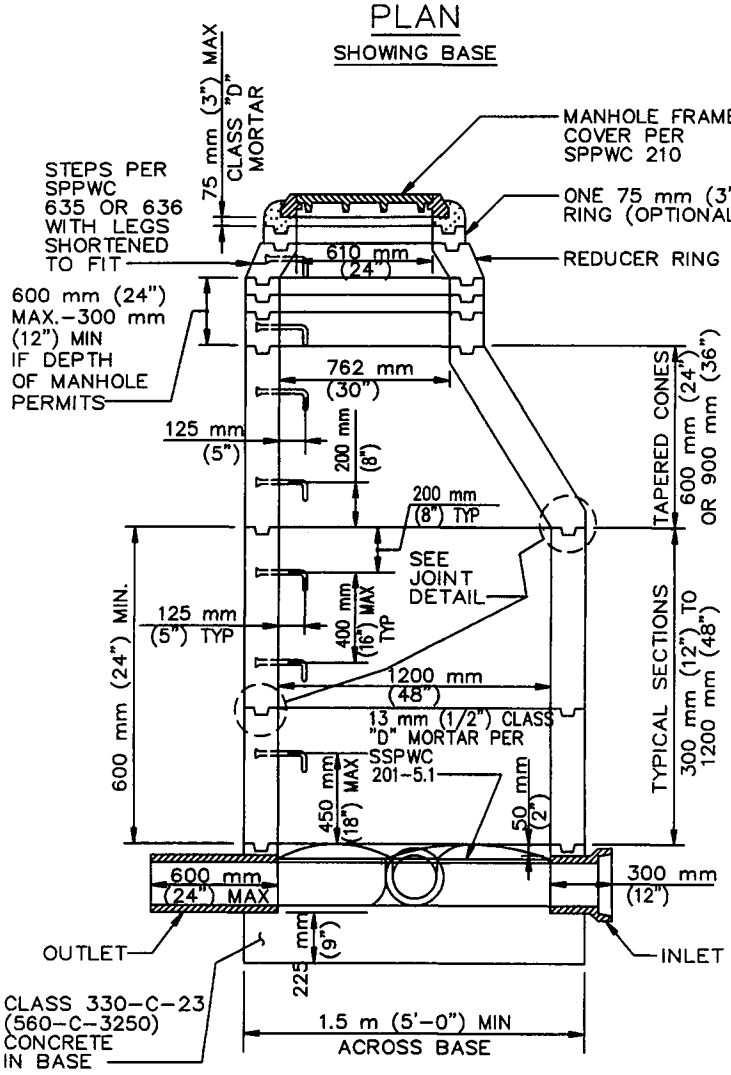

SECTION A–A

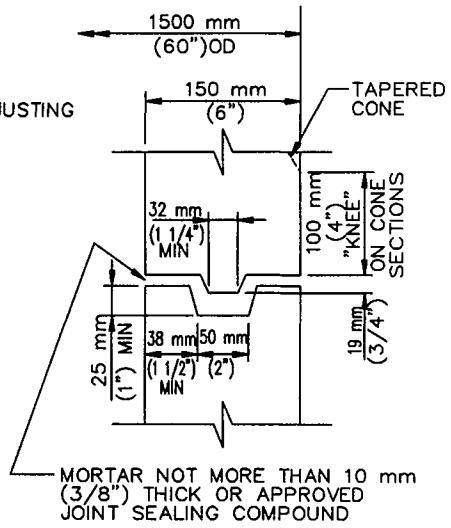

JOINT DETAIL
NON–REINFORCED

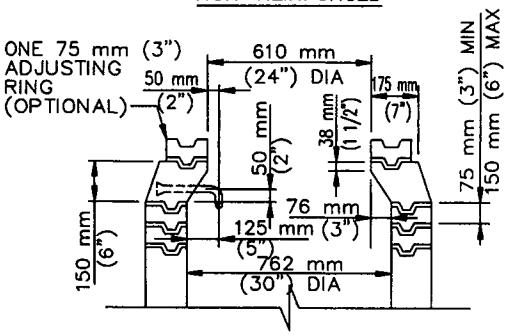

REDUCER RING AND
ADJUSTING RINGS

STANDARD PLANS FOR PUBLIC WORKS CONSTRUCTION

PROMULGATED BY THE
PUBLIC WORKS STANDARDS INC.
GREENBOOK COMMITTEE
1984
REV. 1993, 1995

PRECAST CONCRETE SEWER MANHOLE

USE WITH STANDARD SPECIFICATIONS FOR PUBLIC WORKS CONSTRUCTION

STANDARD PLAN
METRIC
200–2

SHEET 1 OF 2

NOTES:

1. EXCEPT AS NOTED HEREON, THE PRECAST UNITS SHALL BE MANUFACTURED AND TESTED IN ACCORDANCE WITH ASTM C 478. AS AN ALTERNATE CURING METHOD, THE UNITS MAY BE CURED USING SATURATED STEAM FOR A MINIMUM OF 12 HOURS FOLLOWED BY 6 DAYS OF WATER CURING OR MEMBRANE CURING. IF THE UNITS ARE CURED BY THE ALTERNATE METHOD, THEY SHALL NOT BE SHIPPED PRIOR TO 8 DAYS AFTER CASTING NOR UNTIL THE CONCRETE HAS ATTAINED A STRENGTH OF 25 MPa (3500 PSI)

2. MANHOLE STEPS SHALL CONFORM TO SPPWC 635 TYPE 1 OR 3 OR SPPWC 636. THE MANHOLE STEPS SHALL BE UNIFORMLY SPACED AT A MAXIMUM OF 400 mm (16"). THE LOWEST STEP SHALL BE PLACED NOT LESS THAN 200 mm (8") NOR MORE THAN 450 mm (18") ABOVE THE SHELF. THE STEPS SHALL PROJECT 125 mm (5") INSIDE THE MANHOLE.

3. RISER SECTIONS MAY BE REINFORCED OR UNREINFORCED. REINFORCED SECTIONS SHALL BE REINFORCED IN ACCORDANCE WITH ASTM C 478 AND SHALL HAVE A MINIMUM WALL THICKNESS OF 125 mm (5"). UNREINFORCED RISER SECTIONS SHALL HAVE A MINIMUM WALL THICKNESS OF 150 mm (6").

4. THE 600 mm x 1200 mm (24"x48") ECCENTRIC CONES MAY BE REINFORCED OR UNREINFORCED. IF REINFORCED, THE WALL THICKNESS SHALL BE NOT LESS THAN 125 mm (5"). IF UNREINFORCED, THE WALL THICKNESS SHALL NOT BE LESS THAN 150 mm (6").

5. JOINTS SHALL BE TONGUE AND GROOVE. JOINTS FOR REINFORCED STRUCTURES SHALL CONFORM WITH ASTM C 478 SECTION 14.

6. PRECAST UNITS SHALL BE ASSEMBLED USING CLASS "B" MORTAR.

7. IF 762 mm (30") DIAMETER MANHOLE FRAME AND COVER IS REQUIRED, IT SHALL BE INSTALLED WHERE THE REDUCER RING IS SHOWN IN THE SECTION.

8. FOR REINFORCED PRECAST STRUCTURES, ALL REINFORCEMENT SHALL HAVE A MINIMUM OF 50 mm (2") OF COVER OVER THE STEEL ON THE INSIDE FACE.

9. THE TOP OPENING OF THE MANHOLE AND THE STEPS SHALL BE PLACED DIRECTLY OVER THE OUTLET OF THE STRUCTURE EXCEPT AS OTHERWISE NOTED ON PLANS.

10. CONCRETE BASE AND STUB WALLS SHALL BE POURED IN ONE OPERATION TO A POINT 50 mm (2") ABOVE THE INLET AND OUTLET PIPES. ALL PIPES SHALL BE RIGIDLY SUPPORTED BY TEMPORARY PIERS OR OTHER METHODS DURING THE OPERATION. CONCRETE SHALL SET FOR 24 HOURS BEFORE PLACING PRECAST UNITS.

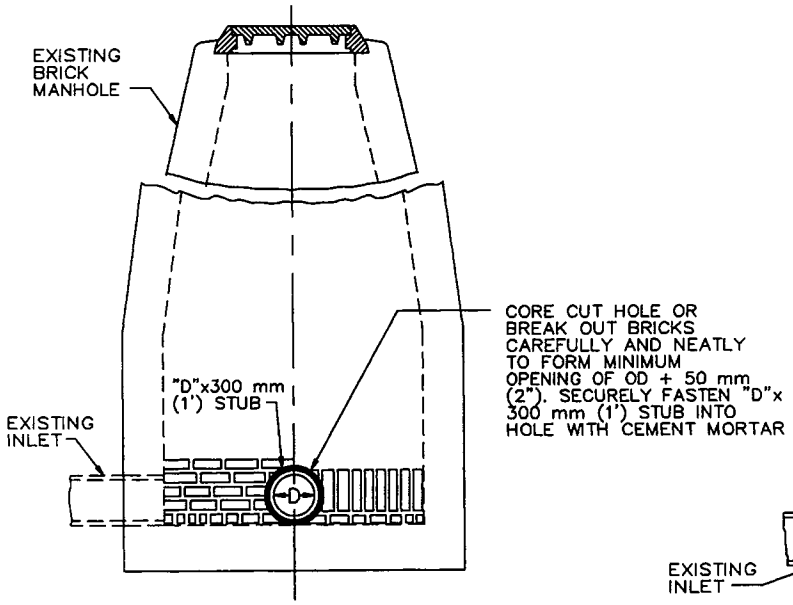

SECTIONAL ELEVATION A–A

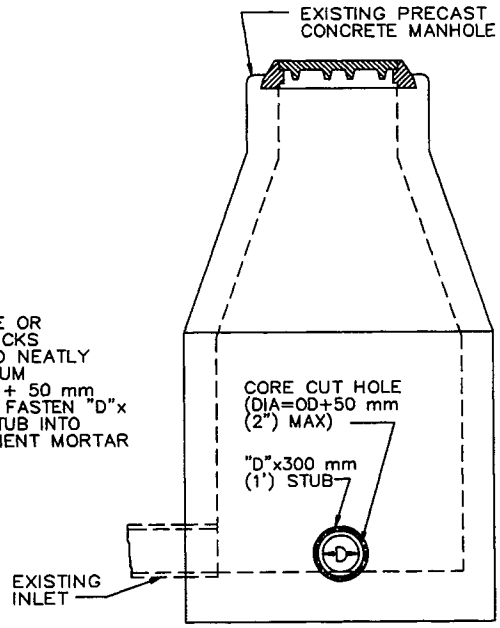

SECTIONAL ELEVATION C–C

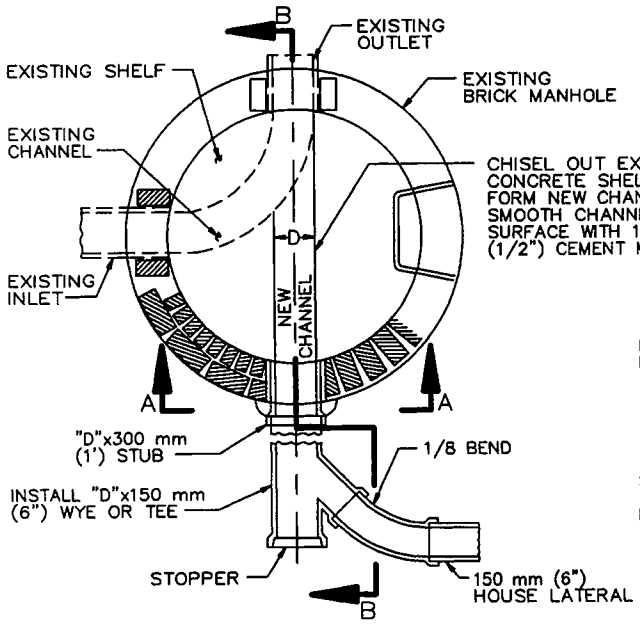

SECTIONAL PLAN OF BASE

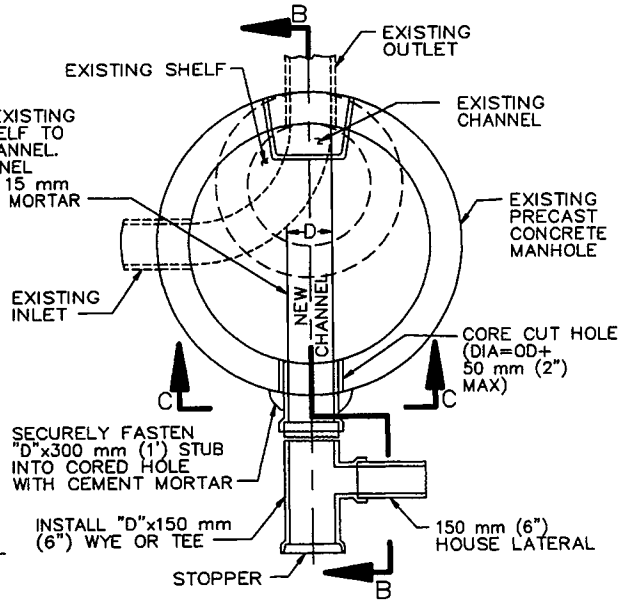

SECTIONAL PLAN OF BASE

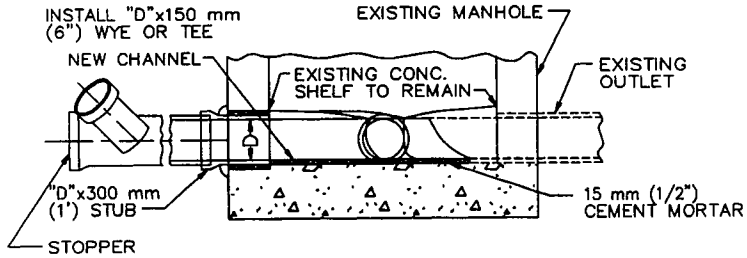

SECTIONAL ELEVATION B–B
CHANNEL BASE

STANDARD PLANS FOR PUBLIC WORKS CONSTRUCTION

PROMULGATED BY THE PUBLIC WORKS STANDARDS, INC., GREENBOOK COMMITTEE 1984 REV. 1996

BREAKING INTO EXISTING MANHOLES

USE WITH STANDARD SPECIFICATIONS FOR PUBLIC WORKS CONSTRUCTION

STANDARD PLAN METRIC
208–1
SHEET 1 OF 2

NOTES:

1. INVERT ELEVATION OF "D" x 300 mm (1') STUB AT THE INSIDE FACE OF MANHOLE TO BE 30 mm (0.10') HIGHER THAN EXISTING OUTLET INVERT ELEVATION.

2. THE CORE CUT HOLE SHALL BE MADE WITH EQUIPMENT SPECIALLY DESIGNED TO CUT A SMOOTH HOLE WITHOUT SPALLING OR DAMAGE TO THE REINFORCING STEEL OR STRUCTURE.

3. "D" TO BE 200 mm (8") MINIMUM.

4. ALL WORK SHALL BE UNCOVERED AND CONVENIENT FOR THE INSPECTION.

5. ALL CEMENT MORTAR SHALL BE CLASS "D" PER SSPWC 201-5.1.

HOUSE LATERAL NOTES:

1. WYE SHALL BE LAID WITH 3 mm (1/8") RISE PER 300 mm (1") AND 150 mm (6") SPUR AT 45° FROM HORIZONTAL UNLESS OTHERWISE NOTED ON PLANS.

2. "D" X 100 mm (4") WYE OR TEE AND 100 mm (4") HOUSE LATERAL MAY BE SUBSTITUTED FOR "D" x 150 mm (6") WYE OR TEE AND 150 mm (6") HOUSE LATERAL.

3. USE TYPE "D" OR "G" JOINTS PER SSPWC 208-2.

APPENDIX IV

CONSTRUCTION ACTIVITIES
STORM WATER GENERAL PERMIT
ORDER NO. 99-08-DWQ

NOTICE OF INTENT
AND
NOTICE OF TERMINATION
FOR ORDER NO. 99-08-DWQ

Additional information about these requirements and documents can be obtained at
http://www.waterboards.ca.gov/water_issues/programs/stormwater/gen_const.shtml#const_permit

Linda S Adams
Secretary for
Environmental Protection

State Water Resources Control Board

Division of Water Quality
1001 I Street • Sacramento, California 95814 • (916) 341-5537
Mailing Address: P.O. Box 1977 • Sacramento, California • 95812-1977
FAX (916) 341-5543 • Internet Address: http://www.waterboards.ca.gov/water_issues/programs/stormwater/

Arnold Schwarzenegger
Governor

CHECKLIST FOR SUBMITTING A NOTICE OF INTENT

In order for the State Water Resources Control Board to expeditiously process your Notice of Intent (NOI), the following items must be submitted to either of the addresses indicated below:

1._____ NOI (please keep a copy for your files) with all applicable sections completed and original signature of the landowner or signatory agent;

2._____ Check made out to the "State Water Resources Control Board"
See reverse for listing of fees by acre. The fee is based on the "Total Acres to be Disturbed" for the life of the project.

3. _____ Site Map of the facility (see NOI instructions). DO NOT SEND BLUEPRINTS

U.S. Postal Service Address

State Water Resources Control Board
Division of Water Quality
Attn: Storm Water Section
P.O. Box 1977
Sacramento, CA 95812-1977

Overnight Mailing Address

State Water Resources Control Board
Division Of Water Quality
Attn: Storm Water, 15th Floor
1001 I Street
Sacramento, CA 95814

NOIs are processed in the order they are received. A NOI receipt letter will be mailed to the land owner within approximately two weeks. Incomplete NOI submittals will be returned to the landowner's address within the same timeframe and will specify the reason(s) for return. If you need a receipt letter by a specific date (for example, to provide to a local agency), we advise that you submit your NOI thirty (30) days prior to the date the receipt letter is needed.

Please do not call us to verify your NOI status. A copy of your NOI receipt letter will be available on our web page within twenty-four (24) hours of processing. Go to:
http://www.waterboards.ca.gov/water_issues/programs/stormwater/databases.shtml
to retrieve an electronic copy of your NOI receipt letter. If you have any questions regarding this matter, please contact us at (916) 341-5537.

Construction Annual Fees by Acre

Partial Acreage rounded to nearest whole number

Acres	Fee	21% Surcharge	Total Fee	Acres	Fee	21% Surcharge	Total Fee
0	$238	$50	$288	51	$1,462	$307	$1,769
1	$262	$55	$317	52	$1,486	$312	$1,798
2	$286	$60	$346	53	$1,510	$317	$1,827
3	$310	$65	$375	54	$1,534	$322	$1,856
4	$334	$70	$404	55	$1,558	$327	$1,885
5	$358	$75	$433	56	$1,582	$332	$1,914
6	$382	$80	$462	57	$1,606	$337	$1,943
7	$406	$85	$491	58	$1,630	$342	$1,972
8	$430	$90	$520	59	$1,654	$347	$2,001
9	$454	$95	$549	60	$1,678	$352	$2,030
10	$478	$100	$578	61	$1,702	$357	$2,059
11	$502	$105	$607	62	$1,726	$362	$2,088
12	$526	$110	$636	63	$1,750	$368	$2,118
13	$550	$116	$666	64	$1,774	$373	$2,147
14	$574	$121	$695	65	$1,798	$378	$2,176
15	$598	$126	$724	66	$1,822	$383	$2,205
16	$622	$131	$753	67	$1,846	$388	$2,234
17	$646	$136	$782	68	$1,870	$393	$2,263
18	$670	$141	$811	69	$1,894	$398	$2,292
19	$694	$146	$840	70	$1,918	$403	$2,321
20	$718	$151	$869	71	$1,942	$408	$2,350
21	$742	$156	$898	72	$1,966	$413	$2,379
22	$766	$161	$927	73	$1,990	$418	$2,408
23	$790	$166	$956	74	$2,014	$423	$2,437
24	$814	$171	$985	75	$2,038	$428	$2,466
25	$838	$176	$1,014	76	$2,062	$433	$2,495
26	$862	$181	$1,043	77	$2,086	$438	$2,524
27	$886	$186	$1,072	78	$2,110	$443	$2,553
28	$910	$191	$1,101	79	$2,134	$448	$2,582
29	$934	$196	$1,130	80	$2,158	$453	$2,611
30	$958	$201	$1,159	81	$2,182	$458	$2,640
31	$982	$206	$1,188	82	$2,206	$463	$2,669
32	$1,006	$211	$1,217	83	$2,230	$468	$2,698
33	$1,030	$216	$1,246	84	$2,254	$473	$2,727
34	$1,054	$221	$1,275	85	$2,278	$478	$2,756
35	$1,078	$226	$1,304	86	$2,302	$483	$2,785
36	$1,102	$231	$1,333	87	$2,326	$488	$2,814
37	$1,126	$236	$1,362	88	$2,350	$494	$2,844
38	$1,150	$242	$1,392	89	$2,374	$499	$2,873
39	$1,174	$247	$1,421	90	$2,398	$504	$2,902
40	$1,198	$252	$1,450	91	$2,422	$509	$2,931
41	$1,222	$257	$1,479	92	$2,446	$514	$2,960
42	$1,246	$262	$1,508	93	$2,470	$519	$2,989
43	$1,270	$267	$1,537	94	$2,494	$524	$3,018
44	$1,294	$272	$1,566	95	$2,518	$529	$3,047
45	$1,318	$277	$1,595	96	$2,542	$534	$3,076
46	$1,342	$282	$1,624	97	$2,566	$539	$3,105
47	$1,366	$287	$1,653	98	$2,590	$544	$3,134
48	$1,390	$292	$1,682	99	$2,614	$549	$3,163
49	$1,414	$297	$1,711	>100	$2,618	$550	$3,168
50	$1,438	$302	$1,740				

FACT SHEET
FOR
WATER QUALITY ORDER 99-08-DWQ

STATE WATER RESOURCES CONTROL BOARD (SWRCB)
901 P STREET, SACRAMENTO, CALIFORNIA 95814

NATIONAL POLLUTANT DISCHARGE ELIMINATION SYSTEM (NPDES)
GENERAL PERMIT FOR
STORM WATER DISCHARGES ASSOCIATED WITH
CONSTRUCTION ACTIVITY (GENERAL PERMIT)

BACKGROUND

In 1972, the Federal Water Pollution Control Act (also referred to as the Clean Water Act [CWA]) was amended to provide that the discharge of pollutants to waters of the United States from any point source is unlawful unless the discharge is in compliance with an NPDES permit. The 1987 amendments to the CWA added Section 402(p) which establishes a framework for regulating municipal and industrial storm water discharges under the NPDES Program. On November 16, 1990, the U.S. Environmental Protection Agency (USEPA) published final regulations that establish storm water permit application requirements for specified categories of industries. The regulations provide that discharges of storm water to waters of the United States from construction projects that encompass five (5) or more acres of soil disturbance are effectively prohibited unless the discharge is in compliance with an NPDES Permit. Regulations (Phase II Rule) that became final on December 8, 1999 expand the existing NPDES program to address storm water discharges from construction sites that disturb land equal to or greater than one (1) acre and less than five (5) acres (small construction activity). The regulations require that small construction activity, other than those regulated under an individual or Regional Water Quality Control Board General Permit, must be permitted no later than March 10, 2003.

While federal regulations allow two permitting options for storm water discharges (individual permits and General Permits), the SWRCB has elected to adopt only one statewide General Permit at this time that will apply to all storm water discharges associated with construction activity, except from those on Tribal Lands, in the Lake Tahoe Hydrologic Unit, and those performed by the California Department of Transportation (Caltrans). Construction on Tribal Lands is regulated by an USEPA permit, the Lahontan Regional Water Control Board adopted a separate NPDES permit for the Lake Tahoe Hydrologic Unit, and the SWRCB adopted a separate NPDES permit for Caltrans projects. This General Permit requires all dischargers where construction activity disturbs one acre or more, to:

1. Develop and implement a Storm Water Pollution Prevention Plan (SWPPP) which specifies Best Management Practices (BMPs) that will prevent all construction pollutants from contacting storm water and with the intent of keeping all products of erosion from moving off site into receiving waters.

2. Eliminate or reduce nonstorm water discharges to storm sewer systems and other waters of the nation.

3. Perform inspections of all BMPs.

This General Permit shall be implemented and enforced by the nine California Regional Water Quality Control Boards (RWQCBs).

The General Permit accompanying this fact sheet regulates storm water runoff from construction sites. Regulating many storm water discharges under one permit will greatly reduce the otherwise overwhelming administrative burden associated with permitting individual storm water discharges. Dischargers shall submit a Notice of Intent (NOI) to obtain coverage under this General Permit. It is expected that as the storm water program develops, the RWQCBs may issue General Permits or individual permits containing more specific permit provisions. When this occurs, those dischargers will no longer be regulated by this General Permit.

On August 19, 1999, the State Water Resources Control Board (SWRCB) reissued the General Construction Storm Water Permit (Water Quality Order 99-08-DWQ referred to as "General Permit"). The San Francisco BayKeeper, Santa Monica BayKeeper, San Diego BayKeeper, and Orange Coast Keeper filed a petition for writ of mandate challenging the General Permit in the Superior Court, County of Sacramento. The Court issued a judgment and writ of mandate on September 15, 2000. The Court directed the SWRCB to modify the provisions of the General Permit to require permittees to implement specific sampling and analytical procedures to determine whether Best Management Practices (BMPs) implemented on a construction site are: (1) preventing further impairment by sediment in storm waters discharged directly into waters listed as impaired for sediment or silt, and (2) preventing other pollutants, that are known or should be known by permittees to occur on construction sites and that are not visually detectable in storm water discharges, from causing or contributing to exceedances of water quality objectives. The monitoring provisions in the General Permit have been modified pursuant to the court order.

TYPES OF CONSTRUCTION ACTIVITY COVERED BY THIS GENERAL PERMIT

Construction activity subject to this General Permit includes clearing, grading, disturbances to the ground such as stockpiling, or excavation that results in soil disturbances of at least one acre of total land area. Construction activity that results in soil disturbances of less than one acre is subject to this General Permit if the construction activity is part of a larger common plan of development that encompasses one or more acres of soil disturbance or if there is significant water quality impairment resulting from the activity. Construction activity does not include routine maintenance to maintain original line and grade, hydraulic capacity, or original purpose of the facility, nor does it include emergency construction activities required to protect public health and safety. Dischargers should confirm with the local RWQCB whether or not a particular routine maintenance activity is subject to this General Permit.

A construction project which includes a dredge and/or fill discharge to any jurisdictional surface water (e.g., wetland, channel, pond, or marine water) will also need a CWA Section 404 permit

from the U.S. Army Corps of Engineers and a CWA Section 401 Water Quality Certification from the RWQCB/SWRCB. Storm water discharges from dredge spoil placement which occurs outside of Corps jurisdiction (upland sites) and are part of construction activity which disturbs one or more acres of land are covered by this general permit. Proponents of construction projects which disturb one or more acres of land within the jurisdictional boundaries of a CWA Section 404 permit should contact the local RWQCB to determine the applicability of this permit to the project.

NOTIFICATION REQUIREMENTS

It is the responsibility of the landowner to obtain coverage under this General Permit prior to commencement of construction activities. To obtain coverage, the landowner must file an NOI with a vicinity map and the appropriate fee with the SWRCB. In addition, coverage under this permit shall not occur until the applicant develops an adequate SWPPP for the project. Section A of the General Permit outlines the required contents of a SWPPP. For proposed construction activity on easements or on nearby property by agreement or permission, the entity responsible for the construction activity shall file an NOI and filing fee and shall be responsible for development of the SWPPP, all of which must occur prior to commencement of construction activities.

A separate NOI shall be submitted to the SWRCB for each construction site. Owners of new construction shall file an NOI prior to the commencement of construction. Owners of an ongoing construction site that is covered under the previous General Construction Permit (WQ Order No.92-08-DWQ) (1) shall continue to implement their existing SWPPP and monitoring program and (2) shall implement any necessary revisions to their SWPPP in a timely manner but in no case later than 90-calender days from adoption of this General Permit in accordance with Section A of this General Permit.

The NOI requirements of the General Permit are intended to establish a mechanism which can be used to clearly identify the responsible parties, locations, and scope of operations of dischargers covered by the General Permit and to document the discharger's knowledge of the requirements for a SWPPP.

The NOI must be sent to the following address:

State Water Resources Control Board
Division of Water Quality
Storm Water Permit Unit
P.O. Box 1977
Sacramento, CA 95812-1977

The Annual fees are established through regulations adopted by the SWRCB. The total annual fee is the current base fee plus applicable surcharges for all construction sites submitting an NOI .

When construction is complete or ownership has been transferred, dischargers shall file a Notice of Termination with the RWQCB certifying that all State and local requirements have been met in accordance with Special Provisions for Construction Activity, C.7, of the General Permit.

Dischargers who fail to obtain coverage under this General Permit for storm water discharges to surface waters will be in violation of the CWA and the California Water Code.

CONSTRUCTION ACTIVITY NOT COVERED BY THIS GENERAL PERMIT

This General Permit does not apply to storm water discharges from (1) those areas on Tribal Lands; (2) the Lake Tahoe Hydrologic Unit; (3) construction under one acre, unless part of a larger common plan of development or sale; (4) projects covered by an individual NPDES Permit for storm water discharges associated with construction activity; and (5) landfill construction that is subject to the general industrial permit.

Storm water discharges in the Lake Tahoe Hydrologic Unit are regulated by a separate permit(s) adopted by the California Regional Water Quality Control Board, Lahontan Region (LRWQCB). USEPA regulates storm water discharges on Tribal Lands. Permit applications for storm water discharges that will be conducted in the Lake Tahoe Hydrologic Unit must be submitted directly to the LRWQCB.

DESCRIPTION OF GENERAL PERMIT CONDITIONS

The following is a brief description of the major provisions of the General Permit and the basis for the General Permit.

Prohibitions

This General Permit authorizes the discharge of storm water to surface waters from construction activities that result in the disturbance of one or more acres of land. It prohibits the discharge of materials other than storm water and authorized non-storm water discharges and all discharges which contain a hazardous substance in excess of reportable quantities established at 40 Code of Federal Regulations (CFR) 117.3 or 40 CFR 302.4 unless a separate NPDES Permit has been issued to regulate those discharges. In addition, this General Permit contains provisions that uphold discharge prohibitions contained in water quality control plans, as implemented through the nine RWQCBs.

Effluent Limitations

Permits for storm water discharges associated with construction activity shall meet all applicable provisions of Sections 301 and 402 of the CWA. These provisions require controls of pollutant discharges that utilize best available technology economically achievable (BAT) and best conventional pollutant control technology (BCT) to reduce pollutants and any more stringent controls necessary to meet water quality standards.

It is not feasible at this time for the SWRCB to establish numeric effluent limitations. The reasons why it is not feasible to establish numeric effluent limitations are discussed in detail in SWRCB Order Nos. WQ 91-03 and WQ 91-04. Therefore, the effluent limitations contained in this General Permit are narrative and include the requirement to implement appropriate BMPs.

The BMPs shall primarily emphasize source controls such as erosion control and pollution prevention methods. The discharger shall also install structural controls, as necessary, such as sediment control which will constitute BAT and BCT and will achieve compliance with water quality standards. The narrative effluent limitations constitute compliance with the requirements of the CWA.

Elimination or reduction of nonstorm water discharges is a major goal of this General Permit. Nonstorm water discharges include a wide variety of sources, including improper dumping, spills, or leakage from storage tanks or transfer areas. Nonstorm water discharges may contribute a significant pollutant load to receiving waters. Measures to control spills, leakage, and dumping and to prevent illicit connections during construction shall be addressed through structural as well as non-structural BMPs.

This General Permit prohibits the discharge of materials other than storm water and authorized nonstorm water discharges. It is recognized that certain nonstorm water discharges may be necessary for the completion of construction projects. Such discharges include, but are not limited to irrigation of vegetative erosion control measures, pipe flushing and testing, street cleaning, and dewatering. Such discharges are allowed by this General Permit provided they are not relied upon to clean up failed or inadequate construction or post-construction BMPs designed to keep materials onsite. These authorized nonstorm water discharges shall (1) be infeasible to eliminate, (2) comply with BMPs as described in the SWPPP, and (3) not cause or contribute to a violation of water quality standards. Additionally, these discharges may be required to be permitted by the local RWQCB (e.g., some RWQCBs have adopted General Permits for dewatering discharges). This General Permit is performance-based to the extent that it prohibits the discharge of storm water that causes or threatens to cause pollution, contamination, or nuisance; but it also allows the owner/developer to determine the most economical, effective, and possibly innovative BMPs.

The requirements of this General Permit are intended to be implemented on a year-round basis, not just during the part of the year when there is a high probability of a precipitation event which results in storm water runoff. The permit should be implemented at the appropriate level and in a proactive manner during all seasons while construction is ongoing.

Weather and storm predictions or weather information concerning the 10-year, 6-hour storm event and mean annual rainfall can be obtained by calling the Western Regional Climate Center at 775-674-7010 or via the internet at www.wrcc.dri.edu/precip.html and/or www.wrcc.dri.edu/pcpnfreq.html.

Receiving Water Limitations Language

The receiving water limitations language is fundamentally different from the language adopted in the SWRCB General Industrial Activities Storm Water Permit on April 17, 1997. Construction related activities which cause or contribute to an exceedance of water quality standards must be corrected immediately and cannot wait for the RWQCB to approve a plan of action to correct. The dynamic nature of construction activity allows the discharger the ability to more quickly identify and correct the source of the exceedances. Therefore, the owner is

required to take immediate corrective action and to provide a report to the appropriate RWQCB within
14-calendar days of the violation describing the corrective action.

Storm Water Pollution Prevention Plan (SWPPP)

This General Permit requires development and implementation of a SWPPP. This document emphasizes the use of appropriately selected, correctly installed and maintained pollution reduction BMPs. This approach provides the flexibility necessary to establish BMPs which can effectively address source control of pollutants during changing construction activities.

All dischargers shall prepare and implement a SWPPP prior to disturbing a site. The SWPPP must be implemented at the appropriate level to protect water quality at all times throughout the life of the project. Nonstorm water BMPs must be implemented year round. The SWPPP shall remain on the site while the site is under construction, commencing with the initial mobilization and ending with the termination of coverage under the permit.

The SWPPP has two major objectives: (1) to help identify the sources of sediment and other pollutants that affect the quality of storm water discharges and (2) to describe and ensure the implementation of BMPs to reduce or eliminate sediment and other pollutants in storm water as well as nonstorm water discharges. The SWPPP shall include BMPs which address source control and, if necessary, shall also include BMPs which address pollutant control.

Required elements of a SWPPP include: (1) site description addressing the elements and characteristics specific to the site, (2) descriptions of BMPs for erosion and sediment controls, (3) BMPs for construction waste handling and disposal, (4) implementation of approved local plans, (5) proposed post-construction controls, including description of local post-construction erosion and sediment control requirements, and (6) nonstorm water management.

To ensure that the preparation, implementation, and oversight of the SWPPP is sufficient for effective pollution prevention, individuals responsible for creating, revising, overseeing, and implementing the SWPPP should participate in applicable training programs and document such training in the SWPPP.

SWPPPs are reports that are available to the public under Section 308(b) of the CWA and will be made available by the RWQCB upon request.

Monitoring Program

Another major feature of the General Permit is the development and implementation of a monitoring program. All dischargers are required to conduct inspections of the construction site prior to anticipated storm events and after actual storm events. During extended storm events, inspections must be made during each 24-hour period. The goals of these inspections are (1) to identify areas contributing to a storm water discharge; (2) to evaluate whether measures to reduce pollutant loadings identified in the SWPPP are adequate and properly installed and functioning in accordance with the terms of the General Permit; and (3) whether additional control practices or corrective maintenance activities are needed. Equipment, materials, and

workers must be available for rapid response to failures and emergencies. All corrective maintenance to BMPs shall be performed as soon as possible, depending upon worker safety.

Each discharger shall certify annually that the construction activities are in compliance with the requirements of this General Permit. Dischargers who cannot certify annual compliance shall notify the appropriate RWQCB. A well-developed monitoring program will provide a good method for checking the effectiveness of the SWPPP.

Retention of Records

The discharger is required to retain records of all monitoring information, copies of all reports required by this General Permit, and records of all data used to complete the NOI for all construction activities to be covered by the General Permit for a period of at least three years from the date generated. This period may be extended by request of the SWRCB and/or RWQCB. With the exception of reporting noncompliance to the appropriate RWQCB, dischargers are not required to submit the records, except upon specific request by the RWQCB.

NOTICE OF INTENT (NOI) TO COMPLY WITH THE TERMS OF THE GENERAL PERMIT TO DISCHARGE STORM WATER ASSOCIATED WITH CONSTRUCTION ACTIVITY

GENERAL INSTRUCTIONS

Who Must Submit

Discharges of storm water associated with construction that results in the disturbance of one acre or more of land must apply for coverage under the General Construction Activities Storm Water Permit (General Permit). Construction activity which is a part of a larger common area of development or sale must also be permitted. (For example, if 4 acres of a 20-acre subdivision is disturbed by construction activities, and the remaining 16 acres is to be developed at a future date, the property owner must obtain a General Storm Water Permit for the 4-acre project). Construction activity includes, but is not limited to: clearing, grading, demolition, excavation, construction of new structures, and reconstruction of existing facilities involving removal and replacement that results in soil disturbance. This includes construction access roads, staging areas, storage areas, stockpiles, and any off-site areas which receive run-off from the construction project such as discharge points into a receiving water. Construction activity does not include routine maintenance to maintain original line and grade, hydraulic capacity, or original purpose of the facility.

The owner of the land where the construction activity is occurring is responsible for obtaining a permit. Owners may obtain coverage under the General Permit by filing a NOI in accordance with the following instructions. Coverage for construction activity conducted on easements (e.g., pipeline construction) or on nearby properties by agreement or permission, or by an owner or lessee of a mineral estate (oil, gas, geothermal, aggregate, precious metals, and/or industrial minerals) entitled to conduct the activities, shall be obtained by the entity responsible for the construction activity. Linear construction projects which will have construction activity occurring in one or more than one Region should contact the State Water Resources Control Board at the number listed below prior to submitting an NOI application for specific information related to the use of the NOI form.

Construction Activity Not Covered By This General Permit

Storm water discharges in the Lake Tahoe Hydrologic Unit will be regulated by a separate permit(s) adopted by the California Regional Water Quality Control Board, Lahontan Region, and will not be covered under the State Water Resources Control Board's (SWRCB) General Permit. Storm water discharges on Indian Lands will be regulated by the U.S. Environmental Protection Agency.

Where to Apply

The NOI form, vicinity map, and appropriate fee must be mailed to the SWRCB at the following address:

State Water Resources Control Board
Division of Water Quality
Attn: Storm Water Permit Unit
P.O. Box 1977
Sacramento, CA 95812-1977

When to Apply

Property owners proposing to conduct construction activities subject to this General Permit must file a Notice of Intent prior to the commencement of construction activity.

Fees

The total annual fee is the current base fee plus applicable surcharges for all construction sites submitting an NOI. Checks should be made payable to: SWRCB.

Completing the Notice of Intent (NOI)

The submittal to obtain coverage under the General Permit must include a completed NOI Form (Notice of Intent, attached), a vicinity map, and the appropriate annual fee. The NOI must be completely and accurately filled out; the vicinity map and annual fee must be included with the NOI or the submittal is considered incomplete and will be rejected. A construction site is considered to be covered by the General Permit upon filing a complete NOI submittal, and implementation of a defensible Storm Water Pollution Prevention Plan (SWPPP). Upon receipt of a complete NOI submittal, each discharger will be sent a receipt letter containing the waste discharger's identification (WDID) number.

Questions?

If you have any questions on completing the NOI please call the SWRCB at (916) 341-5537.

NOI-LINE-BY-LINE INSTRUCTIONS

Please type or print when completing the NOI Form and vicinity map.

SECTION I--NOI STATUS

Mark one of the two boxes at the top portion of the NOI. Check box 1 if the NOI is being completed for new construction. Check box 2 if the NOI is being submitted to report changes for a construction site already covered by the General Permit. An example of a change that warrants a resubmittal of the NOI is a change of total area of the construction site. The permit is non-transferable, a change of ownership requires a Notice of Termination (NOT) submittal and a new NOI. Complete only those portions of the NOI that apply to the changes (the NOI must always be signed). If box 2 is checked, the WDID number must be included.

SECTION II--PROPERTY OWNER

Enter the construction site owner's official or legal name and address; contact person (if other than owner), title, and telephone number.

SECTION III--DEVELOPER / CONTRACTOR INFORMATION

Enter the name of the developer's (or general contractor's) official or legal name, address, contact person, title, and telephone number. The contact person should be someone who is familiar with the construction site and is responsible for compliance and oversight of the general permit.

SECTION IV-CONSTRUCTION PROJECT INFORMATION

Enter the project name, site address, county, city, (or nearest city if construction is occurring in an unincorporated area), zip code, and telephone number (if any) of the construction site. Include an emergency contact telephone or pager number. Construction site information should include latitude and longitude designations, tract numbers, and/or mile post markers, if applicable. The site contact person should be someone who is familiar with the project, site plans, SWPPP, and monitoring program. All NOIs must be accompanied by a vicinity map.

Part A: Enter the total size in acres of all areas associated with construction activity, including all access roads.

Part B: Enter the total size in acres of the area to be disturbed by construction activity and the percentage of the area listed in Part A above that this represents.

Part C: Enter the percentage of the site that is impervious (areas where water cannot soak into the ground, such as concrete, asphalt, rooftops, etc.) before and after construction.

Part D: Include tract numbers, if available.

Part E: Enter the mile post marker number at the project site location.

Part F: Indicate whether the construction site is part of a larger common plan of development or sale. For example, if the construction activity is occurring on a two-acre site which is within a development that is one acre or greater, answer yes.

Part G: Enter the name of the development (e.g. "Quail Ridge Subdivision", "Orange Valley Estates", etc.).

Part H: Indicate when construction will begin (month, day, year). When a NOI is being submitted due to a change in ownership, the commencement date should be the date the new ownership took effect.

Part I: Indicate the percentage of the total project area to be mass graded.

Part J: Enter the estimated completion dates for the mass grading activities and for the project completion.

Part K: Indicate the type(s) of construction taking place. For example, “Transportation” should be checked for the construction of roads; “Utility” should be checked for installation of sewer, electric, or telephone systems. Include a description of the major construction activities, (e.g., 20 single family homes, a supermarket, an office building, a factory, etc.)

SECTION V--BILLING ADDRESS

To continue coverage under the General Permit, the annual fee must be paid. Indicate where the annual fee invoice should be mailed by checking one of the following boxes:

Owner: sent to the owners address as it appears in Section II.

Developer/Contractor: sent to the developer's address as it appears in Section III.

Other: sent to a different address and enter that address in the spaces provided.

SECTION VI--REGULATORY STATUS

Indicate whether or not the site is subject to local erosion/sediment control ordinances. Indicate whether the erosion/sediment control plan designed to comply with the ordinance addresses the construction of infrastructure and structures in addition to grading. Identify the name and telephone number of the local agency, if applicable.

SECTION VII--RECEIVING WATER INFORMATION

Part A: Indicate whether the storm water runoff from the construction site discharges indirectly to waters of the United States, directly to waters of the United States, or to a separate storm drain system.

Indirect discharges include discharges that may flow overland across adjacent properties or rights-of-way prior to discharging into waters of the United States.

Enter the name of the owner/operator of the relevant storm drain system, if applicable. Storm water discharges directly to waters of the United States will typically have an outfall structure directly from the facility to a river, lake, creek, stream, bay, ocean, etc. Discharges to separate storm sewer systems are those that discharge to a collection system operated by municipalities, flood control districts, utilities, or similar entities.

Part B: Enter the name of the receiving water. Regardless of point of discharge, the owner must determine the receiving water for the construction site's storm water discharge. Enter the name of the receiving water.

SECTION VIII--IMPLEMENTATION OF NPDES PERMIT REQUIREMENTS

Part A: Indicate the status of the SWPPP, date prepared, or availability for review. Also indicate if a tentative construction schedule has been included in the SWPPP (the inclusion of a construction activity schedule is a mandatory SWPPP requirement).

Part B: Provide information concerning the status of the development of a monitoring program, a component of the SWPPP which outlines an inspection and maintenance schedule for the proposed Best Management Practices (BMPs). Provide name and phone number of program preparer.

Part C: Provide the name and phone numbers of the responsible party or parties designated to insure compliance with all elements of the General Permit and SWPPP.

SECTION IX--VICINITY MAP AND FEE

Provide a “to scale” or "to approximate scale" drawing of the construction site and the immediate surrounding area. Whenever possible, limit the map to an 8.5” x 11’ or 11" x 17" sheet of paper. At a minimum, the map must show the site perimeter, the geographic features surrounding the site, and general topography, and a north arrow. The map must also include the location of the construction project in relation to named streets, roads, intersections, or landmarks. A NOI containing a map which does not clearly indicate the location of the construction project will be rejected. Do not submit blueprints unless they meet the above referenced size limits.

SECTION X--CERTIFICATIONS

This section must be completed by the owner or signatory agent of the construction site*. The certification provides assurances that the NOI and vicinity map were completed in an accurate and complete fashion and with the knowledge that penalties exist for providing false information. Certification also requires the owner to comply with the provisions in the General Permit.

* For a corporation: a responsible corporate officer (or authorized individual). For a partnership or sole proprietorship: a general partner or the proprietor, respectively. For a municipality, State, Federal, or other public agency: either a principal executive officer, ranking elected official, or duly authorized representative.

Attachment 2

State Water Resources Control Board

NOTICE OF INTENT

TO COMPLY WITH THE TERMS OF THE
GENERAL PERMIT TO DISCHARGE STORM WATER
ASSOCIATED WITH CONSTRUCTION ACTIVITY (WQ ORDER No. 99-08-DWQ)

I. NOI STATUS (SEE INSTRUCTIONS)

MARK ONLY ONE ITEM 1. ☐ New Construction 2. ☐ Change of Information for WDID#

II. PROPERTY OWNER

Name	Contact Person		
Mailing Address	Title		
City	State	Zip	Phone

Owner Type (*check one*) 1.[ ] Private Individual 2.[ ]Business 3.[ ]Municipal 4.[ ]State 5.[ ]Federal 6.[ ]Other

III. DEVELOPER/CONTRACTOR INFORMATION

Developer/Contractor	Contact Person		
Mailing Address	Title		
City	State	Zip	Phone

IV. CONSTRUCTION PROJECT INFORMATION

Site/Project Name	Site Contact Person		
Physical Address/Location	Latitude _____°	Longitude _____°	County
City (or nearest City)	Zip	Site Phone Number	Emergency Phone Number

A. Total size of construction site area: _____ Acres

B. Total area to be disturbed: _____ Acres (% of total _____)

C. Percent of site imperviousness (including rooftops):

Before Construction: _____%

After Construction: _____%

D. Tract Number(s): _____, _____

E. Mile Post Marker: _____

F. Is the construction site part of a larger common plan of development or sale?

☐ YES ☐ NO

G. Name of plan or development:

H. Construction commencement date: _____/_____/_____

I. % of site to be mass graded: _____

J. Projected construction dates:

Complete grading: _____/_____/_____ Complete project: _____/_____/_____

K. Type of Construction (Check all that apply):

1. ☐ Residential 2. ☐ Commercial 3. ☐ Industrial 4. ☐ Reconstruction 5. ☐ Transportation

6. ☐ Utility Description: _____ 7. ☐ Other (Please List): _____

V. BILLING INFORMATION

SEND BILL TO:	Name	Contact Person	
☐ OWNER (as in II. above)			
☐ DEVELOPER (as in III. above)	Mailing Address	Phone/Fax	
☐ OTHER (enter information at right)	City	State	Zip

VI. REGULATORY STATUS

A. Has a local agency approved a required erosion/sediment control plan?..... ☐ YES ☐ NO

Does the erosion/sediment control plan address construction activities such as infrastructure and structures?..... ☐ YES ☐ NO

Name of local agency: _____ Phone: _____

B. Is this project or any part thereof, subject to conditions imposed under a CWA Section 404 permit of 401 Water Quality Certification?..... ☐ YES ☐ No

If yes, provide details: _____

VII. RECEIVING WATER INFORMATION

A. Does the storm water runoff from the construction site discharge to (Check all that apply):

1. ☐ **Indirectly to waters of the U.S.**

2. ☐ **Storm drain system - Enter owner's name:**_____

3. ☐ **Directly to waters of U.S. (e.g. , river, lake, creek, stream, bay, ocean, etc.)**

B. Name of receiving water: (river, lake, creek, stream, bay, ocean): _____

VIII. IMPLEMENTATION OF NPDES PERMIT REQUIREMENTS

A. STORM WATER POLLUTION PREVENTION PLAN (SWPPP) (check one)

☐ A SWPPP has been prepared for this facility and is available for review: Date Prepared: ____/____/____ Date Amended: ____/____/____

☐ A SWPPP will be prepared and ready for review by (enter date): ____/____/____

☐ A tentative schedule has been included in the SWPPP for activities such as grading, street construction, home construction, etc.

B. MONITORING PROGRAM

☐ A monitoring and maintenance schedule has been developed that includes inspection of the construction BMPs before anticipated storm events and after actual storm events and is available for review.

If checked above: A qualified person has been assigned responsibility for pre-storm and post-storm BMP inspections to identify effectiveness and necessary repairs or design changes..... ☐ YES ☐ NO

Name: _____ Phone: _____

C. PERMIT COMPLIANCE RESPONSIBILITY

A qualified person has been assigned responsibility to ensure full compliance with the Permit, and to implement all elements of the Storm Water Pollution Prevention Plan including:

1. Preparing an annual compliance evaluation..... ☐ YES ☐ NO

Name: _____ Phone: _____

2. Eliminating all unauthorized discharges..... ☐ YES ☐ NO

IX. VICINITY MAP AND FEE (must show site location in relation to nearest named streets, intersections, etc.)

Have you included a vicinity map with this submittal? ..... ☐ YES ☐ NO

Have you included payment of the annual fee with this submittal?..... ☐ YES ☐ NO

X. CERTIFICATIONS

"I certify under penalty of law that this document and all attachments were prepared under my direction and supervision in accordance with a system designed to assure that qualified personnel properly gather and evaluate the information submitted. Based on my inquiry of the person or persons who manage the system, or those persons directly responsible for gathering the information, the information submitted is, to the best of my knowledge and belief, true, accurate, and complete. I am aware that there are significant penalties for submitting false information, including the possibility of fine or imprisonment. In addition, I certify that I have read the entire General Permit, including all attachments, and agree to comply with and be bound by all of the provisions, requirements, and prohibitions of the permit, including the development and implementation of a Storm Water Pollution Prevention Plan and a Monitoring Program Plan will be complied with."

Printed Name: _____

Signature: _____ **Date:** _____

Title: _____

ATTACHMENT 3

303d Listed Water Bodies for Sedimentation

REGION	WATER BODY NAME	CODE	POLLUTANT
1	MATTOLE RIVER	1100	Sedimentation/Siltation
1	TRINITY RIVER, SOUTH FORK	1100	Sedimentation/Siltation
1	REDWOOD CREEK	1100	Sedimentation/Siltation
1	MAD RIVER	1100	Sedimentation/Siltation
1	ELK RIVER	1100	Sedimentation/Siltation
1	EEL RIVER, SOUTH FORK	1100	Sedimentation/Siltation
1	EEL RIVER, NORTH FORK	1100	Sedimentation/Siltation
1	TRINITY RIVER	1100	Sedimentation/Siltation
1	EEL RIVER, MIDDLE FORK	1100	Sedimentation/Siltation
1	MAD RIVER	2500	Turbidity
1	TEN MILE RIVER	1100	Sedimentation/Siltation
1	NOYO RIVER	1100	Sedimentation/Siltation
1	BIG RIVER	1100	Sedimentation/Siltation
1	ALBION RIVER	1100	Sedimentation/Siltation
1	NAVARRO RIVER	1100	Sedimentation/Siltation
1	GARCIA RIVER	1100	Sedimentation/Siltation
1	GUALALA RIVER	1100	Sedimentation/Siltation
1	RUSSIAN RIVER	1100	Sedimentation/Siltation
1	TOMKI CREEK	1100	Sedimentation/Siltation
1	VAN DUZEN RIVER	1100	Sedimentation/Siltation
1	EEL RIVER DELTA	1100	Sedimentation/Siltation
1	EEL RIVER, MIDDLE MAIN FORK	1100	Sedimentation/Siltation
1	ESTERO AMERICANO	1100	Sedimentation/Siltation
1	NAVARRO RIVER DELTA	1100	Sedimentation/Siltation
1	EEL RIVER, UPPER MAIN FORK	1100	Sedimentation/Siltation
1	FRESHWATER CREEK	1100	Sedimentation/Siltation
1	SCOTT RIVER	1100	Sedimentation/Siltation
2	TOMALES BAY	1100	Sedimentation/Siltation
2	NAPA RIVER	1100	Sedimentation/Siltation
2	SONOMA CREEK	1100	Sedimentation/Siltation
2	PETALUMA RIVER	1100	Sedimentation/Siltation
2	LAGUNITAS CREEK	1100	Sedimentation/Siltation
2	WALKER CREEK	1100	Sedimentation/Siltation
2	SAN GREGORIO CREEK	1100	Sedimentation/Siltation

2	SAN FRANCISQUITO CREEK	1100	Sedimentation/Siltation
2	PESCADERO CREEK (REG 2)	1100	Sedimentation/Siltation
2	BUTANO CREEK	1100	Sedimentation/Siltation
3	MORRO BAY	1100	Sedimentation/Siltation
3	SAN LORENZO RIVER ESTUARY	1100	Sedimentation/Siltation
3	SHINGLE MILL CREEK	1100	Sedimentation/Siltation
3	MOSS LANDING HARBOR	1100	Sedimentation/Siltation
3	WATSONVILLE SLOUGH	1100	Sedimentation/Siltation
3	SAN LORENZO RIVER	1100	Sedimentation/Siltation
3	ELKHORN SLOUGH	1100	Sedimentation/Siltation
3	SALINAS RIVER LAGOON (NORTH)	1100	Sedimentation/Siltation
3	GOLETA SLOUGH/ESTUARY	1100	Sedimentation/Siltation
3	CARPINTERIA MARSH (EL ESTERO MARSH)	1100	Sedimentation/Siltation
3	LOMPICO CREEK	1100	Sedimentation/Siltation
3	MORO COJO SLOUGH	1100	Sedimentation/Siltation
3	VALENCIA CREEK	1100	Sedimentation/Siltation
3	PAJARO RIVER	1100	Sedimentation/Siltation
3	RIDER GULCH CREEK	1100	Sedimentation/Siltation
3	LLAGAS CREEK	1100	Sedimentation/Siltation
3	SAN BENITO RIVER	1100	Sedimentation/Siltation
3	SALINAS RIVER	1100	Sedimentation/Siltation
3	CHORRO CREEK	1100	Sedimentation/Siltation
3	LOS OSOS CREEK	1100	Sedimentation/Siltation
3	SANTA YNEZ RIVER	1100	Sedimentation/Siltation
3	SAN ANTONIO CREEK (SANTA BARBARA COUNTY)	1100	Sedimentation/Siltation
3	CARBONERA CREEK	1100	Sedimentation/Siltation
3	SOQUEL LAGOON	1100	Sedimentation/Siltation
3	APTOS CREEK	1100	Sedimentation/Siltation
4	MUGU LAGOON	1100	Sedimentation/Siltation
5	HUMBUG CREEK	1100	Sedimentation/Siltation
5	PANOCHE CREEK	1100	Sedimentation/Siltation
5	FALL RIVER (PIT)	1100	Sedimentation/Siltation
6	BEAR CREEK (R6)	1100	Sedimentation/Siltation
6	MILL CREEK (3)	1100	Sedimentation/Siltation
6	HORSESHOE LAKE (2)	1100	Sedimentation/Siltation
6	BRIDGEPORT RES	1100	Sedimentation/Siltation
6	TOPAZ LAKE	1100	Sedimentation/Siltation
6	LAKE TAHOE	1100	Sedimentation/Siltation

State Water Resources Control Board

Division of Water Quality

1001 I Street • Sacramento, California 95814 • (916) 341-5537
Mailing Address: P.O. Box 1977 • Sacramento, California • 95812-1977
FAX (916) 341-5543 • Internet Address: http://www.waterboards.ca.gov/stormwtr/index.html

Linda S. Adams
Secretary for Environmental Protection

Arnold Schwarzenegger
Governor

To: Storm Water Permit Holder

RE: NOTICE OF TERMINATION OF COVERAGE UNDER THE GENERAL **CONSTRUCTION** STORM WATER PERMIT (GENERAL PERMIT)

In order for us to terminate your coverage under the General Permit, please complete and submit the enclosed Notice of Termination (NOT) your local Regional Water Quality Control Board (RWQCB). Refer to the last page of the NOT packet for RWQCB locations.

Submittal of a NOT does not guarantee termination and outstanding invoices are still valid. If your NOT is denied, you will be required to continue complying with the requirements of the General Permit and all outstanding invoice(s) are due. You will be notified of your NOT status by the RWQCB or State Water Resources Control Board. Approval of your Notice of Termination does not relieve you from paying any applicable outstanding invoices.

Should you have any questions regarding this matter, please contact your local RWQCB at the number listed on the back page of the NOT package, or the Storm Water Unit at (916) 341-5537.

Sincerely,

Storm Water Unit
Division of Water Quality

Enclosure

SEND TO YOUR LOCAL RWQCB FOR APPROVAL

State of California
State Water Resources Control Board

NOTICE OF TERMINATION

OF COVERAGE UNDER THE NPDES GENERAL PERMIT NO. CAS000002
FOR DISCHARGES OF STORM WATER
ASSOCIATED WITH CONSTRUCTION ACTIVITY

Submission of this Notice of Termination constitutes notice that the owner (and his/her agent) of the site identified on this form is no longer authorized to discharge storm water associated with construction activity by NPDES General Permit No. CAS000002.

I. WDID NO.

II. OWNER

COMPANY NAME _____ CONTACT PERSON

STREET ADDRESS _____ TITLE

CITY _____ STATE _____ ZIP _____ PHONE

III. CONSTRUCTION SITE INFORMATION

A. DEVELOPER NAME _____ CONTACT PERSON

STREET ADDRESS _____ TITLE

CITY _____ CA _____ ZIP _____ PHONE

B. SITE ADDRESS _____ COUNTY _____

CITY _____ CA _____ ZIP _____ PHONE

IV. BASIS OF TERMINATION

_____ 1. The construction project is complete and the following conditions have been met.

- All elements of the Storm Water Pollution Prevention Plan have been completed.
- Construction materials and waste have been disposed of properly.
- The site is in compliance with all local storm water management requirements.
- A post-construction storm water operation and management plan is in place.

Date of project completion _____/_____/_____

_____ 2. Construction activities have been suspended, either temporarily _____ or indefinitely _____ and the following conditions have been met.

- All elements of the Storm Water Pollution Prevention Plan have been completed.
- Construction materials and waste have been disposed of properly.
- All denuded areas and other areas of potential erosion are stabilized.
- An operation and maintenance plan for erosion and sediment control is in place.
- The site is in compliance with all local storm water management requirements.

SEND TO YOUR LOCAL RWQCB FOR APPROVAL

Date of suspension _____/_____/_____ Expected start up date _____/_____/_____

_____ 3. Site can not discharge storm water to waters of the United States (check one).

_____ All storm water is retained on site.

_____ All storm water is discharged to evaporation or percolation ponds offsite.

_____ 4. Discharge of storm water from the site is now subject to another NPDES general permit or an individual NPDES permit.

NPDES Permit No._____ Date coverage began _____/_____/_____

_____ 5. There is a new owner of the identified site. Date of owner transfer _____/_____/_____

Was the new owner notified of the General Permit requirements? YES ____ NO ____

NEW OWNER INFORMATION

COMPANY NAME _____ CONTACT PERSON

STREET ADDRESS _____ TITLE

CITY _____ STATE _____ ZIP _____ PHONE

V. EXPLANATION OF BASIS OF TERMINATION (Attach site photographs - see instructions).

VI. CERTIFICATION:

I certify under penalty of law that all storm water discharges associated with construction activity from the identified site that are authorized by NPDES General Permit No. CAS000002 have been eliminated or that I am no longer the owner of the site. I understand that by submitting this Notice of Termination, I am no longer authorized to discharge storm water associated with construction activity under the general permit, and that discharging pollutants in storm water associated with construction activity to waters of the United States is unlawful under the Clean Water Act where the discharge is not authorized by a NPDES permit. I also understand that the submittal of this Notice of Termination does not release an owner from liability for any violations of the general permit or the Clean Water Act.

PRINTED NAME _____ TITLE

SIGNATURE: _____ DATE _____/_____/_____

REGIONAL WATER BOARD USE ONLY

This Notice of Termination has been reviewed, and I recommend termination of coverage under the subject NPDES general permit.

Printed Name _____ Region No. _____

Signature _____ Date _____/_____/_____

NOT effective date:

Date: ____/____/____

State of California
State Water Resources Control Board

INSTRUCTIONS FOR COMPLETING NOTICE OF TERMINATION FOR CONSTRUCTION ACTIVITY

Who May File

Dischargers who are presently covered under NPDES General Permit No. CAS000002 for discharge of storm water associated with construction activity may submit a Notice of Termination when they meet one of the following criteria.

1. The construction project has been completed and the following conditions have been met: all elements of the Stormwater Pollution Prevention Plan have been completed; construction materials and equipment maintenance waste have been disposed of properly; the site is in compliance with all local storm water management requirements including erosion/sediment control requirements and the appropriate use permits have been obtained; and a post-construction storm water operation and management plan is in place.

2. Construction activities have been suspended, either temporarily or indefinitely and the following conditions have been: all elements of the Stormwater Pollution Prevention Plan have been completed; construction materials and equipment maintenance waste have been disposed of properly; all denuded areas and other areas of potential erosion are stabilized; an operation and maintenance plan for erosion and sediment control is in place; and the site is in compliance with all local storm water management requirements including erosion/sediment control requirements.
   The date construction activities were suspended, and the expected date construction activities will start up again should be provided.

3. Construction site can not discharge storm water to waters of the United States. Please indicate if all storm water is retained on site or if storm water is collected offsite.

4. Discharge of construction storm water from the site is now subject to another NPDES general permit or an individual NPDES permit. The general permit or individual permit NPDES number and date coverage began should be provided.

5. There is a new owner of the identified site. If ownership or operation of the facility has been transferred then the previous owner must submit a Notice of Termination and the new owner must submit a Notice of Intent for coverage under the general permit. The date of transfer and information on the new owner should be provided. Note that the previous owner may be liable for discharge from the site until the new owner files a Notice of Intent for coverage under the general permit.

Where to File

Submit the Notice of Termination to the Executive Officer of the Regional Water Quality Control Board responsible for the area in which the facility is located. See attached. Submittal of a NOT does not guarantee termination and outstanding invoices are still valid. If the Executive Officer, or his designated staff, agrees with the basis of termination, the Notice of Termination will be transmitted to the State Water Board for processing at which time it will be determined if any outstanding invoices are still valid. Approval of your Notice of Termination does not relieve you from paying any applicable outstanding invoices. If the Executive Officer, or his designated staff, does not agree with the basis of termination, the Notice of Termination will be returned. The Regional Water Board may also inspect your site prior to accepting the basis of termination.

LINE-BY-LINE INSTRUCTIONS

All necessary information must be provided on the form. Type or print in the appropriate areas only. Submit additional information, if necessary, on a separate sheet of paper.

SECTION I--WDID NO.

The WDID No. is a number assigned to each discharger covered under the General Permit. If you do not know your WDID No., please call the State Water Board or Regional Water Board and request it prior to submittal of the Notice of Termination.

SECTION II--OWNER

Enter the owner of the construction site's official or legal name (This should correspond with the name on the Notice of Intent submitted for the site), address of the owner, contact person, and contact person's title and telephone number.

SECTION III--CONSTRUCTION SITE INFORMATION

In Part A, enter the name of the developer (or general contractor), address, contact person, and contact person's title and telephone number. The contact person should be the construction site manager completely familiar with the construction site and charged with compliance and oversight of the general permit. This information should correspond with information on the Notice of Intent submitted for the site.

In Part B, enter the address, county, and telephone number (if any) of the construction site. Construction sites that do not have a street address must attach a legal description of the site.

SECTION IV--BASIS OF TERMINATION

Check the category which best defines the basis of your termination request. See the discussion of the criteria in the Who May File section of these instructions. Provide dates and other information requested. Use the space under Explanation of Basis of Termination heading.

SECTION V--EXPLANATION OF BASIS OF TERMINATION

Please explain the basis or reasons why you believe your construction site is not required to comply with the General Permit. To support your explanation, provide a site map and photograph of your site.

SECTION VI--CERTIFICATION

This section must be completed by the owner of the site.

The Notice of Termination must be signed by:

For a Corporation: a responsible corporate officer

For a Partnership or Sole Proprietorship: a general partner or the proprietor, respectively.

For a Municipality, State, or other Non-Federal Public Agency: either a principal executive officer or ranking elected official.

For a Federal Agency: either the chief or senior executive officer of the agency.

CALIFORNIA REGIONAL WATER QUALITY CONTROL BOARDS

NORTH COAST REGION (1)
5550 Skylane Blvd, Ste. A
Santa Rose, CA 95403
(707) 576-2220 FAX: (707)523-0135
http://www.waterboards.ca.gov/northcoast/

SAN FRANCISCO BAY REGION (2)
1515 Clay Street, Ste. 1400
Oakland, CA 94612
(510) 622-2300 FAX: (510) 622-2640
http://www.waterboards.ca.gov/sanfranciscobay/

CENTRAL COAST REGION (3)
895 Aerovista Place, Ste 101
San Luis Obispo, CA 93401
(805) 549-3147 FAX: (805) 543-0397
http://www.waterboards.ca.gov/centralcoast/

LOS ANGELES REGION (4)
320 W. 4th Street, Ste. 200
Los Angeles, CA 90013
(213) 576-6600 FAX: (213) 576-6640
http://www.waterboards.ca.gov/losangeles/

CENTRAL VALLEY REGION (5S)
11020 Sun Center Dr., #200
Rancho Cordova, CA 95670-6114
(916) 464-3291 FAX: (916) 464-4645
http://www.waterboards.ca.gov/centralvalley/

FRESNO BRANCH OFFICE (5F)
1685 E St.
Fresno, CA 93706
(559) 445-5116 FAX: (559) 445-5910
http://www.waterboards.ca.gov/centralvalley/

REDDING BRANCH OFFICE (5R)
415 Knollcrest Drive, Ste. 100
Redding, CA 96002
(530) 224-4845 FAX: (530) 224-4857
http://www.waterboards.ca.gov/centralvalley/

LAHONTAN REGION (6 SLT)
2501 Lake Tahoe Blvd.
South Lake Tahoe, CA 96150
(530) 542-5400 FAX: (530) 544-2271
http://www.waterboards.ca.gov/lahontan/

VICTORVILLE OFFICE (6V)
14440 Civic Drive, Ste. 200
Victorville, CA 92392-2383
(760) 241-6583 FAX: (760) 241-7308
http://www.waterboards.ca.gov/lahontan/

COLORADO RIVER BASIN REGION (7)
73-720 Fred Waring Dr., Ste. 100
Palm Desert, CA 92260
(760) 346-7491 FAX: (760) 341-6820
http://www.waterboards.ca.gov/coloradoriver/

SANTA ANA REGION (8)
3737 Main Street, Ste. 500
Riverside, CA 92501-3339
Phone (951) 782-4130 FAX: (951) 781-6288
http://www.waterboards.ca.gov/santaana/

SAN DIEGO REGION (9)
9174 Sky Park Court, Ste. 100
San Diego, CA 92123-4340
(858) 467-2952 FAX: (858) 571-6972
http://www.waterboards.ca.gov/sandiego/

STATE OF CALIFORNIA
Arnold Schwarzenegger, Governor

CALIFORNIA ENVIRONMENTAL
PROTECTION AGENCY
Linda S. Adams, Secretary

STATE WATER RESOURCES
CONTROL BOARD
Tam M. Doduc Chair

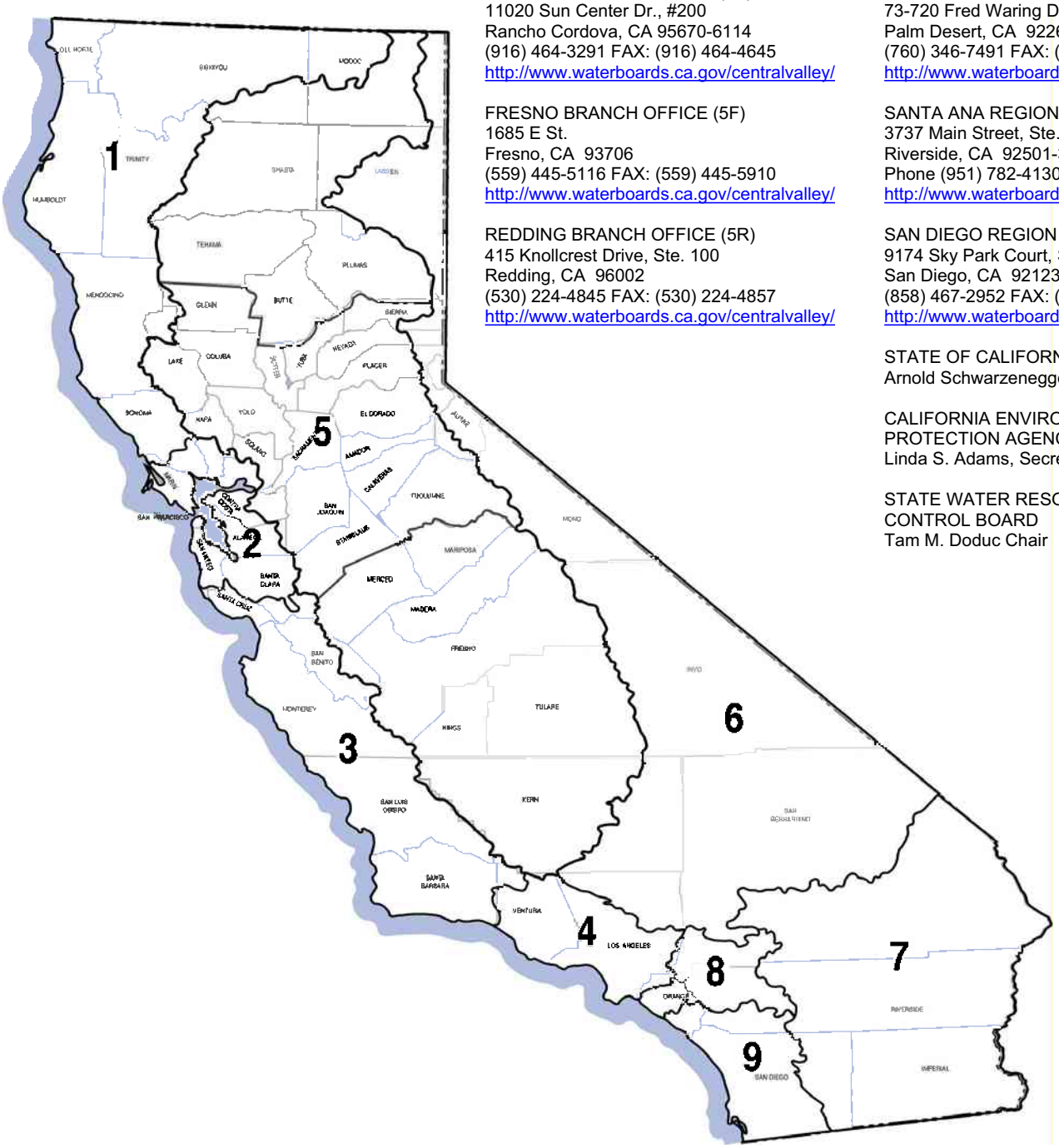

APPENDIX V

CALIFORNIA DIVISION OF OCCUPATIONAL SAFETY AND HEALTH ACTIVITY FORM FOR BUILDINGS/STRUCTURES, SCAFFOLDING/FALSEWORK, DEMOLITION, TRENCHES/EXCAVATIONS

State of California
Department of Industrial Relations
Division of Occupational Safety & Health

PROJECT ACTIVITY FORM

Buildings/Structures, Scaffolding/Falsework, Demolition, Trenches/Excavations

Company Name: _____ Field Phone: _____

Annual Permit Number: _____ Office Phone: _____

Specific Activity Location: _____ Number of Employees: _____

Nearest Major Cross Street: _____ Starting Date: _____

City: _____ Anticipated Completion Date: _____

County: _____ High Voltage Lines in Proximity? No _____ Yes _____

INSTRUCTIONS: The appropriate item(s) must be completed and signed by a person knowledgeable about the project for each activity covered by a permit. Please fill in or check off the blanks where appropriate.

Construction: Building _____ Structure _____ Type: Steel Frame _____ Tiered _____ Concrete _____

Tilt-up _____ Wood Frame _____ Curtain Wall _____ Precast _____ Slip Form _____ Depth _____ Height _____

Description: _____

(See 8 CCR 1709-30: Appendix A Plate A-2a & b)

Scaffolding: Height _____ Metal _____ Wood _____ Wood over 60 Feet _____ Metal over 125 Feet _____

Metal > 125 Feet or Wood >60 Feet requires design by California Registered Civil Engineer & Plans at Site.(See 8 CCR 1644(c)(7))

Description: _____

Falsework/Vertical Shoring: Maximum Height _____ Maximum Span _____ Material _____

Description: _____

(See 8 CCR 1717)

Demolition Of: Building _____ Structure _____ Height _____ No. of Stories _____ Type: Steel Frame _____

Wood Frame _____ Concrete _____ Demolition Ball _____ Clam _____ Explosives _____

Loader/Tractors _____ Other _____

(See 8 CCR 1734 - 37)

Trenches/Excavations: Depth Range(Min/Max) * _____ Width Range(Min/Max) _____ Total Length _____

Ground Protection Method: Shoring _____ Sloping _____ Trench Shield _____ Professional Engineer _____

Underground Services Alert(USA) Number _____ (NORTH 1-800-642-2444/SOUTH 1-800-422-4133)

Soil Analysis to be done? Yes _____ No _____ If No, You Must Slope 1.5 to 1.

Description: _____

• Ground protection methods for excavations deeper than 20 feet must be designed by a Registered Professional Engineer. See 8 CCR 1541.1, Appendix F.

State of California
Department of Industrial Relations
Division of Occupational Safety & Health

ACTIVITY NOTIFICATION FORM FOR HOLDERS OF ANNUAL PERMITS

Buildings/Structures, Scaffolding/Falsework, Demolition, Trenches/Excavations

THIS FORM **SHALL** BE FAXED TO THE NEAREST DOSH OFFICE TO COMPLY WITH THE 8 CCR 341.1(h).
PLEASE **DO NOT** MAIL DUPLICATE NOTIFICATION AS A FOLLOW-UP TO FAX NOTIFICATION.

FAX DATA: FAXED TO _____ DOSH DISTRICT OFFICE ON _____

DOSH FAX NO. (_____) _____ BY _____

Company Name: _____ Field Phone: _____

Annual Permit Number: _____ Office Phone: _____

Issuing Region: _____ Issuing District: _____

Specific Activity Location: _____ Number of Employees: _____

Nearest Major Cross Street: _____ Starting Date: _____

City: _____ Anticipated Completion Date: _____

County: _____ High Voltage Lines in Proximity? No _____ Yes _____

INSTRUCTIONS: The appropriate item(s) must be completed and signed by a person knowledgeable about the project for each activity covered by a permit. Please fill in or check off the blanks where appropriate.

Construction: Building _____ Structure _____ **Type:** Steel Frame _____ Tiered _____ Concrete _____ Tilt-up _____

Wood Frame _____ Curtain Wall _____ Precast _____ Slip Form _____ Depth _____ Height _____

Description: _____

Scaffolding: Height _____ Metal _____ Wood _____ Wood over 60 Feet _____ Metal over 125 Feet _____

Metal >125 Feet or Wood>60 Feet requires design by California Registered Civil Engineer & Plans at Site. (See 8 CCR 1644(c) (7))

Description: _____

Falsework/Vertical Shoring: Maximum Height _____ Maximum Span _____ Material _____

Description: _____

(See 8 CCR 1717)

Demolition of: Building _____ Structure _____ **Height** _____ No. of Stories _____ **Type:** Steel Frame _____

Wood Frame _____ Concrete _____ Demolition Ball _____ Clam _____ Explosives _____

Loader/Tractors _____ Other _____

Continued on back

Trenches/Excavations: Depth Range (Min/Max) _____ Width Range (Min/Max) _____ Total Length _____

Ground Protection Method: Shoring _____ Sloping _____ Trench Shield _____ Professional Engineer _____

Underground Services Alert (USA) Number _____ (NORTH 1-800-642-2444/SOUTH 1-800-422-4133)

Soil Analysis to be done? Yes _____ No _____ If No, You **Must** Slope 1.5 to 1.

Competent Person: The holder of an Annual Permit who is notifying the District of the commencement of a Trench and/or Excavation project shall designate a **competent person** in accordance with the requirements of 8 CCR Section 1504, 1541, and 1541.1.

Description: _____

_____

_____

* Ground protection methods for excavations deeper than 20 feet must be designed by a Registered Professional Engineer. See 8 CCR 1541.1, Appendix F.

I hereby certify that to the best of my knowledge the above information and assertions are true and correct and that I/the applicant, have knowledge of and will comply with the foregoing.

Name: _____
(Please Type or Print)

Signature: _____

Title: _____

Date: _____

APPENDIX VI

(OMITTED)

APPENDIX VII

(OMITTED)

APPENDIX VIII

COUNTY SANITATION DISTRICTS OF LOS ANGELES COUNTY

AMENDMENTS TO THE STANDARD SPECIFICATIONS FOR PUBLIC WORKS CONSTRUCTION

-PAGE 28-

IN **7-3 LIABILITY INSURANCE,** DELETE THE SECOND AND THIRD PARAGRAPHS AND REPLACE WITH THE FOLLOWING:

"The Contractor may file insurance acceptable to the Districts covering more than one project. The coverage shall provide the following minimum limits for liability insurance:

Contracts less than $2,000,000

Each Occurrence Limit $3,000,000
Products/Completed Operations Aggregate Limit $3,000,000
General Aggregate Limit..... $3,000,000
(other than Products/Completed Operations)

Contracts $2,000,000 and over

Each Occurrence Limit $5,000,000
Products/Completed Operations Aggregate Limit $5,000,000
General Aggregate Limit..... $5,000,000
(other than Products/Completed Operations)

The Contractor shall provide automobile liability insurance with the following minimum limits:

Each Occurrence Limit $1,000,000

All-Risk/Builders Insurance will be required when the contract entails taking possession of any Districts' property, including building and equipment. The coverage shall provide a sufficient amount to include the value of the property and the value of the contract for the duration of the contract as specified in the Special Provisions."

-PAGE 29-

IN **7-5 PERMITS,** AFTER THE FIRST PARAGRAPH, ADD THE FOLLOWING:

"All expenses for complying with the requirements of the permits obtained by the Districts and by the Contractor including, but not limited to, traffic control, repairs, lights, signs, and backfill shall be borne by the Contractor. Inspection fees for resurfacing required by local authority will be borne by the Districts. The Districts will reimburse the Contractor for all State inspection costs incurred for work performed within State of California Department of Transportation (Caltrans) right of way. The Contractor shall invoice the Districts for the costs without any Contractor's markup and the Contractor will be reimbursed by purchase order. Prior to commencing any work, the Contractor shall obtain a separate Caltrans permit (Double Permit) and shall submit to Caltrans a signed construction application including a Performance Bond in the specified amount and an excavation permit from the Division of Occupational Safety and Health."

IN **7-6 THE CONTRACTOR'S REPRESENTATIVE,** SECOND PARAGRAPH, ADD THE FOLLOWING TO THE END:

"The Contractor shall designate in writing a superintendent for contracts in excess of $500,000. This superintendent shall be the Contractor's representative.

Debris in the sewer may contain large pieces of broken concrete, aggregate, sludge, dirt, sand, rocks, grease, roots, solid or semisolid materials, and other foreign objects. The Contractor shall perform all work as necessary to trap and remove the debris from a sewer reach and shall not allow the debris to move to the sewer reach that has already been cleaned or to the sewer reach that is not a part of the project. All debris collected and removed from the sewer shall be disposed of off the site at the end of each day. The Contractor shall be aware that landfills may have daily tonnage limits and the business hours may vary. If the daily tonnage limit is reached, the landfill will be closed for business that day. The Contractor shall be responsible for scheduling and sequencing his cleaning operations. Temporary storage of the debris, if necessary, shall be arranged and provided by the Contractor at no additional cost to the Districts. If the Contractor elects to dispose the debris at the Districts' landfill facilities, the Contractor shall notify the Districts at least two days in advance. Disposal fee shall be the responsibility of the Contractor. Costs associated with the sewer cleaning work shall include construction of access pits, trapping, collecting, removing, hauling and transportation, temporary storage, dewatering, disposal of the debris and dumping fees, and closure of access pits. If there is no sewer cleaning bid item, all costs associated with the sewer cleaning shall be included in the appropriate sewer line rehabilitation or other appropriate bid item.

The Contractor shall be solely responsible for the cleaning method(s) being utilized. The Districts' acceptance of the cleaning method does not relieve the Contractor of such responsibility. The Districts reserve the right to reject the Contractor's proposed cleaning method if the Districts determine that the method selected may endanger or adversely affect the continuous operation of the existing facilities.

For segmented liner pipe installations, the Contractor may utilize the steel pipe test section as specified in 500-1.1.7(b) for cleaning the sewer at his own risk and may utilize the insertion pits as the cleaning access pits. If the Contractor elects to utilize an insertion pit as the access for sewer cleaning, the work shall start within five working days after the Engineer accepts the construction of the insertion pit for that reach of sewer. The Contractor may also construct separate access pits at his own cost for performing the sewer cleaning work. Cleaning access pit(s), if required, shall be located, constructed and waterproofed in the same manner as an insertion pit in accordance with 500-1.1.7(c) and are subject to the approval of the Districts and the Agencies. After the sewer cleaning work is completed, the Contractor shall reinstall the cut portion of the RCP and encase in reinforced concrete, backfill and restore all the disturbed areas in the same manner as an insertion pit."

-PAGE 404-

AFTER **500-1.1.4(c) Mechanically Powered Equipment,** DELETE ALL REMAINING PARAGRAPHS AND TABLE 500-1.1.4 (A).

-PAGE 405-

IN **500-1.1.5 Television Inspection,** DELETE ALL PARAGRAPHS AND REPLACE WITH THE FOLLOWING:

"This section covers the requirements for closed circuit television (CCTV) inspection of sewers.

500-1.1.5.1 General. Unless otherwise specified, CCTV inspection shall be performed on all sewer projects including new sewers constructed per 306 and sewers rehabilitated per 500-1. For new sewer construction, CCTV inspection shall be performed after the sewer is installed but prior to the sewer being placed in service. For sewer rehabilitation, CCTV inspection shall be performed after sewer cleaning to document the condition of the existing host pipe, to ensure that the existing host pipe is ready to be lined or sliplined, and to verify the number, location and status of all existing local sewer or house connections. Additionally, CCTV inspection shall be performed after rehabilitation to locate and

document any defects, to confirm the work has been done in accordance with the contract documents, and to verify all the connections have been properly re-established and the end seals have been properly made up. Any defects found shall be repaired and the sewer shall be re-inspected. For segmented liner pipe installations, the pre-rehabilitation CCTV inspection shall be performed after insertion of the test section but prior to insertion of the liner pipe, and the post-rehabilitation CCTV inspection shall be performed after grouting of the annular space and reconnection of all the existing connections.

500-1.1.5.2 Inspection. CCTV inspection equipment to be used shall be approved by the Engineer prior to the start of the inspection. The CCTV camera shall be a pan/tilt and rotating head camera capable of providing a full view of the inside of all connections. The camera shall be mounted on a skid, floatable raft system, or transporter based on the conditions of sewer to be televised. The camera and skid, raft, or transporter shall be furnished with emergency pull-back cables of sufficient strength for all returning situations. The camera shall be specifically designed and constructed for sewer inspection environment and shall be operative in 100 percent relative humidity. Focal distance shall be adjustable through a range from 1 inch to infinity. The camera and monitor shall produce a minimum 460 lines per inch resolution. Telephones, radios, or other suitable means of communication shall be set up to ensure that adequate communication exists between members of the crew.

At the setup manhole, recording of the CCTV inspection shall begin outside of the manhole and shall continue as the camera is lowered into the manhole and shall show the general condition of the manhole. CCTV inspection shall show a clear view of the entire periphery (circumference) of the sewer including all the defects. Any problems identified during an inspection shall be immediately brought to the attention of the Engineer. For segmented liner pipe installations, the Contractor shall perform the pre- and post-rehabilitation CCTV inspection during low flow. For sewer lining, the Contractor shall perform the pre- and post-rehabilitation CCTV inspection while flow is being bypassed and/or diverted around the sewer, and without standing wastewater. For post-rehabilitation inspection, the video recording shall also include a clear view of the outside ends of the liner from each manhole upstream and downstream of the liner. Unless otherwise directed by the Engineer, the camera shall be moved through the sewer, from upstream to downstream, at a uniform rate of not more than 30 feet per minute. Distance of sewer between adjacent manholes shall be measured and recorded. The distance measurements shall be made from the centerline of the manhole that the camera is traveling from and shall be accurate to within 2 feet for every 1,000 feet inspected. If more than one manhole reach is inspected in a single run, the footage counter shall be reset to zero at all intermediate manholes.

The camera shall pause for a sufficient length of time to adequately document and provide accurate distance measurements of all the defects and the connections observed in the sewer. The camera shall rotate and look directly at each defect and look into each connection to thoroughly document the conditions and determine if the connection is in service. In the same manner, the Contractor shall identify all sewer connections at each manhole including the beginning of setup manhole, all intermediate manholes, and the end of setup manhole. The Contractor shall capture photos of any moderate and severe damage and/or abnormal conditions.

The Contractor shall submit to the Districts a detailed plan for CCTV inspection, including a description of the setup, procedures, retrieving method, list of equipment, and personnel. The Contractor shall not begin inspections until the CCTV submittal and the bypass pumping submittal, if required, are approved by the Districts. If any changes in schedule are necessary, the Contractor shall notify the Districts a minimum of 24 hours prior to performing the inspection. The Contractor shall be responsible for making all necessary arrangements for gaining access to the manholes located in private property. If the work is done in residential areas, the Contractor shall notify the residents in writing, a minimum of 7 days prior to the start of the work. The Contractor shall comply with all applicable traffic requirements. No open manhole shall be left unattended. The Contractor shall remove all equipment from the sewer and manholes at the end of each inspection run and shall reseal all previously sealed manholes at the end of each day.

500-1.1.5.3 Inspection Video Tapes and DVDs.

500-1.1.5.3.1 Video. Video recording shall be in color and shall have the best quality possible. The image shall be in focus at all times. The recording shall be done with adequate lighting to provide a clear view of the entire periphery of the sewer including any defects while keeping glare to a minimum. The image shall not be obscured by "fog" in the sewer. If any submitted recording has unacceptable focus, lighting, sound, data, imaging or interferences, the sewer shall be re-inspected at the Contractor's expense.

The inspection shall be recorded in VHS videotape and data DVD format using new high quality video tapes in the standard play (2-hour) recording mode and high quality DVD-/+ R discs. The recording on each tape and DVD shall be for a single trunk sewer, contiguous and shall be from upstream to downstream. The DVDs shall be indexed with the WinCan software as specified in 500-1.1.5.3.3. At the beginning of each inspection run, the general information of the inspection shall be displayed in the following format:

A. Date of the recording
B. Time of the recording
C. Name of the Contractor performing the CCTV inspection
D. Name of trunk sewer
E. Direction of inspection (upstream or downstream)
F. Pipe or liner material
G. Pipe diameter
H. Length of reach to be televised
I. Manhole number from which the camera is traveling
J. Manhole number to which the camera is traveling

In addition, each recording shall continuously display the following information:

A. Name of trunk sewer
B. Manhole number from which the camera is traveling
C. Manhole number to which the camera is traveling
D. Date of recording
E. Pipe diameter
F. Pipe or liner material
G. Footage - Distance from the centerline of the manhole from which the camera is traveling shall be displayed and continuously updated

The background of the overlays showing the inspection information shall be transparent as to not block out the video. The information shall be displayed at the lower left hand corner of the image in accordance with the following format:

Name of Trunk Sewer		
MH No. (Upstream) to MH No. (Downstream)		
Pipe Size and Material	Date	Footage

All original CCTV inspection tapes and DVDs, including log sheets and reports, shall be submitted to the Engineer and shall become property of the Districts. The individual tapes and the cases containing them shall each have identifying labels on their spines and front in the following format:

District No.	Name of Sewer	Month/Day/Year
From MH No. to MH No.		Pipe Size and Material
Name of Contractor	Pre or Post Rehabilitation Video (if applicable)	

The crystal cases containing each DVD shall each have identifying labels on their spines containing the name of the sewer. The front of the DVD crystal case and the face of the DVD shall contain identifying labels in the following format:

District No.	Name of Sewer	Month/Day/Year
From MH No. to MH No.		Pipe Size and Material
Name of Contractor	Pre or Post Rehabilitation Video (if applicable)	

500-1.1.5.3.2 Audio. The recording shall include an audio portion describing the condition of the sewer with the video image. The audio portion shall be sufficiently free of background noise to produce an oral report that is clear and easily discernible. At the beginning of each inspection run, the audio shall identify the Contractor name, each crew member, date, time, street location, name of trunk sewer, pipe size, pipe or liner material, direction of inspection (upstream or downstream), and the manhole numbers at the beginning and end of each run. The audio shall note the location and condition of the pipe defects, including all cracks, breaks, cracked or misaligned joints, root intrusion, infiltration, missing pieces of pipe, corrosion, deposits, obstructions, and dips. The audio shall also note the location of the connections to the nearest foot, clock position of the connections, condition of the connections, and whether the connection is in service. The description shall be objective and shall not include inspector's estimate of severity, or assumptions about the pipe material or conditions. However, subjective observations shall be included on the inspection report.

500-1.1.5.3.3 Digital Recording. Continuous digital recordings of the inspection view as it appears on the monitor shall be stored. It is intended that a digital recording will be made of the complete pipe inspection. The recording shall also be used as a permanent record of defects. Unless directed otherwise by the Engineer, the recording shall be MPEG I and shall comply with ISO/IEC 11172 MPEG I specifications. The digital encoding shall include both sound and visual information that can be reproduced with an image equal to the quality of the original picture on the monitor. Compression rate shall be 1.5 Mb/s. The operator shall pause the digital recording at any time there is a delay in the inspection. The pause shall in no way effect, freeze or interrupt the replay of the video and shall not close the video file during the inspection. The operator shall store a single video file for each reach inspection. The video files shall have a resolution of 352 by 240 pixels and an interlaced frame rate of minimum 24 frames per second. The data shall be time coded using the elapsed time from the video file. The naming of the video file shall be automatic and shall match the indexing file name.

For each video file, indexing shall exist as a separate text file. The text file shall include the observation detail and the frame number at which the observation is located. The frame number shall be 150 to 200 frames prior to the feet distance the observation appears. This shall allow the user in WinCan to use the indexing feature and go to that defect with a click instead of fast forwarding or rewinding.

Separate MPEG files shall be created for each sewer manhole to manhole reach. MPEG files, picture files in TIF format, inspection data, and text files used for indexing shall be stored on DVDs for delivery to the Engineer.

500-1.1.5.4 Submittal. The Contractor shall submit the CCTV inspection tapes and DVDs of the sewer and a CCTV inspection report. For a given sewer manhole to manhole reach, the MPEG files, picture files in TIF format, inspection data, and text files used for indexing shall be included on the same DVD. It is intended that each DVD shall contain all of the information necessary to view digital video and data files for a given reach, and shall have functional indexing capability. Submittals that require more than one (1) DVD to view digital video and data for a given reach, or to implement the indexing function, will be rejected. For pre-rehabilitation CCTV inspection, the Contractor shall only submit the inspection tapes of the sewer; submission of DVDs and CCTV inspection reports is not required. Acceptance of the submittal is subject to review by the Engineer. If the inspection is not performed in accordance with the Districts' standards or if the quality of the inspection tapes, DVDs, or recording is found to be unacceptable, the submittal will be rejected and the sewer shall re-inspected at the Contractor's sole expense.

CCTV inspection reports shall be generated using the WinCan inspection software customized for the Districts. The reports shall be printed in color and shall include a hard copy log and computer generated graphic for each inspected sewer reach. The log shall include the appropriate District number or Joint Outfall letter, the name of the trunk sewer, the upstream manhole, the downstream manhole, the pipe diameter, the pipe or liner material, the date and time of the inspection, the footage to each defect or feature in the order observed during the inspection, a computer generated graphic for each manhole to manhole reach which indicates the location of each defect or feature found in the segment, and photos of moderate to severe damage and/or abnormal conditions. WinCan inspection software is available from WinCan America, Inc., Albuquerque, New Mexico (505) 341-0109.

The inspection data shall include data tables of observations, photographs, and video where applicable. The observation codes shall be consistent with those used by the Districts. The Contractor will be provided with customized files by the Districts for use with WinCan. These files contain the Districts' observation codes and approved fields for data collection and reporting.

500-1.1.5.5 Payment. Payment for all costs associated with the CCTV inspection of the sewer including all work appurtenant thereto shall be included in appropriate pipe bid item or sewer rehabilitation bid item."

-PAGE 406-

IN **500-1.1.6 Sampling, Testing, and Installation,** ADD THE FOLLOWING TO THE END:

"If the pipeline rehabilitation systems in 500-1.4, 500-1.7, or 500-1.10 are to be installed or if required in the Special Provisions, the Contractor shall implement a sampling and testing plan for compliance samples collected in the field. All samples shall be tested by an independent accredited testing laboratory to be approved by the Districts. The Contractor shall authorize and direct the approved testing laboratory, in writing, to release the test results directly to the Districts immediately after the tests for a given sample are complete. The Contractor shall submit this written authorization to the Districts for approval prior to transmittal to the laboratory. In the event that test results for a given sample are not submitted to the Districts within 15 working days of sample collection or if the samples fail to meet the specified physical properties, the Districts reserve the right to suspend all lining operations. The Districts will continue to charge working days against the Contract time during any suspension periods caused by the late submittal of test results or failure of compliance samples to meet the specified physical properties. In addition, the Districts may withhold progress payments during these delays.

APPENDIX IX

COUNTY SANITATION DISTRICTS OF LOS ANGELES COUNTY

STANDARD PLANS

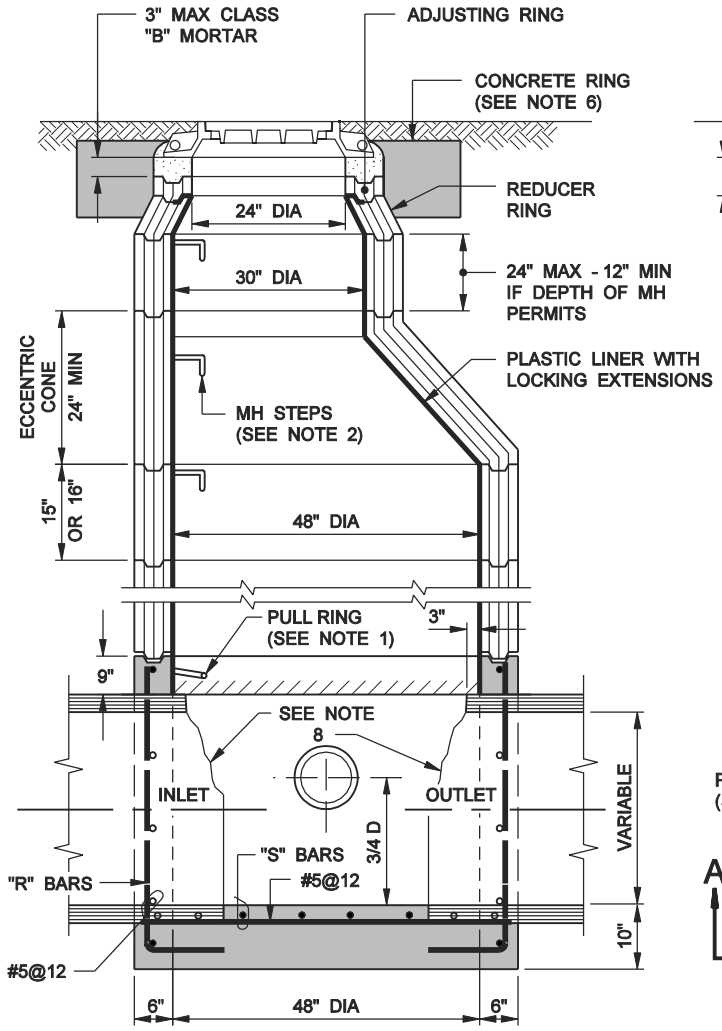

SECTION A-A

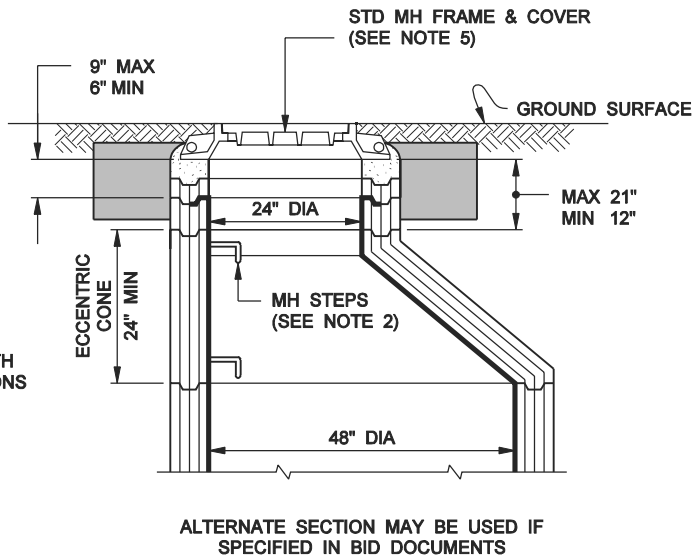

ALTERNATE SECTION MAY BE USED IF SPECIFIED IN BID DOCUMENTS

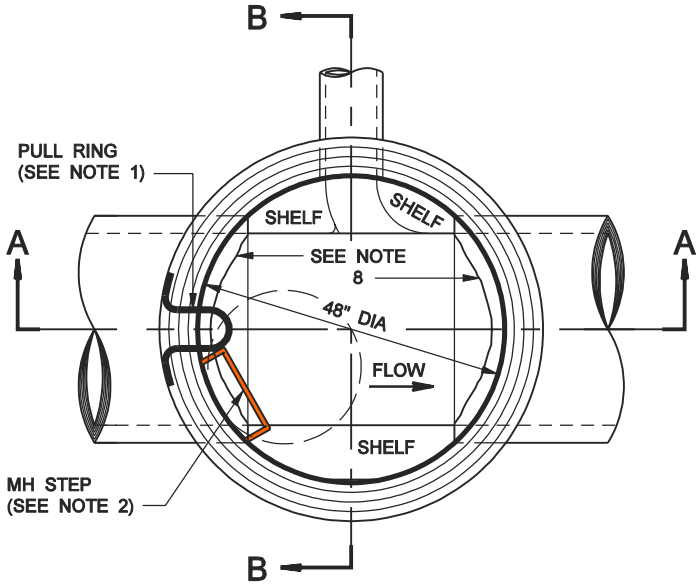

PLAN

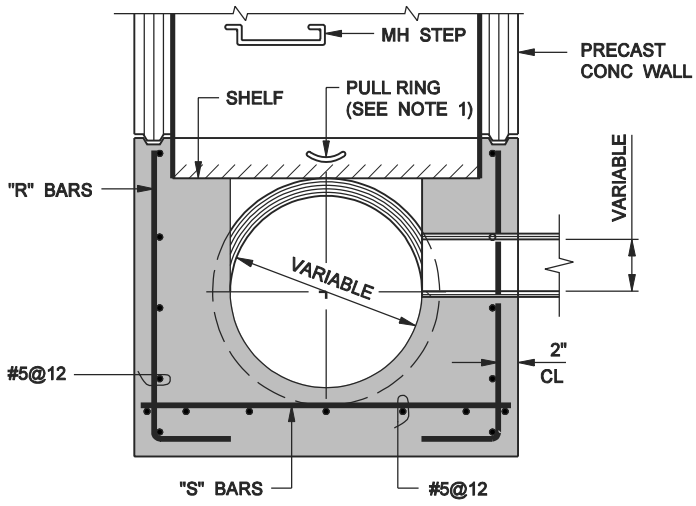

SECTION B-B

TABLE OF REINFORCING BARS			
PIPE DIA	DEPTH TO INV	BARS "R"	BARS "S"
8" TO 21"	UP TO 15'	#5@12	#5@12
	16' TO 30'	#6@12	#6@12
24" TO 30"	UP TO 15'	#5@12	#5@12
	16' TO 30'	#7@12	#6@12

FOR 8" TO 30" PIPE

COUNTY SANITATION DISTRICTS OF LOS ANGELES COUNTY
OFFICE OF CHIEF ENGINEER

STEPHEN R. MAGUIN
CHIEF ENGINEER

STANDARD MANHOLE, TYPE "D"

STANDARD DRAWING
2006 EDITION
S - a - 2 0 4
SHEET 1 OF 3

NOTES:

1. ALL MANHOLES SHALL BE PROVIDED WITH A STANDARD PULL RING IN ACCORDANCE WITH S-a-220. THE PULL RING SHALL BE LOCATED 5" ABOVE THE TOP OF PIPE ON THE UPSTREAM SIDE OF THE MANHOLE AND ALONG THE AXIS OF THE DOWNSTREAM OUTLET. WHERE THE MANHOLE IS TO BE USED AS A DOWNSTREAM SIPHON MANHOLE, IT SHALL BE PROVIDED WITH AN ADDITIONAL STANDARD PULL RING, BUT LOCATED 5" ABOVE THE TOP OF PIPE ON THE DOWNSTREAM SIDE OF THE MANHOLE AND ON THE CENTERLINE OF THE UPSTREAM SIPHON PIPE.

2. MANHOLE STEPS SHALL BE IN ACCORDANCE WITH S-a-209 AND SHALL BE UNIFORMLY SPACED NOT MORE THAN 16" APART. THE TOP STEP SHALL BE PLACED WITHIN 16" BELOW THE MANHOLE FRAME. THE BOTTOM MANHOLE STEP SHALL BE PLACED WITHIN 16" ABOVE THE SHELF. IN MANHOLE SHAFTS 36" IN DIAMETER AND LARGER, THE MANHOLE STEP SHALL PROJECT 5". IN MANHOLE SHAFTS SMALLER THAN 36" IN DIAMETER, THE MANHOLE STEP SHALL PROJECT 4". THE MANHOLE STEPS SHALL BE PLACED SUCH THAT THEY ARE ADJACENT TO BUT NOT INTERFERING WITH ACCESS TO THE PULL RING.

3. THE MANHOLE SHALL BE PROVIDED WITH PLASTIC LINER WITH LOCKING EXTENSIONS. PLASTIC LINER WITH LOCKING EXTENSIONS SHALL BE IN ACCORDANCE WITH THE STANDARD SPECIFICATIONS. THE LINER SHALL EXTEND FROM THE BOTTOM OF THE ADJUSTING RINGS TO THE TOP OF THE SHELF. LINER RETURNS SHALL BE PROVIDED WHERE THE LINER TERMINATES AT THE ADJUSTING RING AND THE SHELF. THE JOINT BETWEEN THE LINER AND THE STAINLESS STEEL STEPS AND PULL RING SHALL BE THOROUGHLY SEALED WITH MASTIC SEAM MATERIAL AS MANUFACTURED BY LINABOND INC., SYLMAR, CALIFORNIA (818) 362-7373, OR EQUAL. APPLICATION OF SEALANT AND PREPARATION OF SURFACES SHALL BE IN STRICT CONFORMANCE WITH THE MANUFACTURER'S DIRECTIONS.

4. UNLESS OTHERWISE SPECIFIED, ALL CONCRETE SHALL BE 660-B-4000 ALL REINFORCING BARS SHALL BE DEFORMED BARS CONFORMING TO ASTM-A706 GRADE 60.

5. IN PAVED AREAS SUBJECT TO TRAFFIC, A 24" TRAFFIC MANHOLE FRAME AND COVER IN ACCORDANCE WITH S-a-228 SHALL BE PROVIDED. IN ALL OTHER AREAS, A 24" LOCKING MANHOLE FRAME AND COVER IN ACCORDANCE WITH S-a-207 SHALL BE PROVIDED. IF A 30" MANHOLE FRAME AND COVER IS REQUIRED, A FRAME AND COVER IN ACCORDANCE WITH S-a-223 SHALL BE PROVIDED AND INSTALLED WHERE THE REDUCER RING IS SHOWN AND THE REDUCER RING, 24" ADJUSTING RINGS, AND 24" FRAME AND COVER SHALL BE OMITTED.

6. A 12" WIDE BY 12" HIGH CONCRETE RING SHALL BE PROVIDED AROUND THE MANHOLE FRAME. IN UNPAVED AREAS, THE CONCRETE RING SHALL BE PROVIDED WITH #3 REBAR, 30 DIAMETER LAP.

NOTES:

7. EXCEPT AS NOTED HEREON, THE PRECAST UNITS SHALL BE MANUFACTURED AND TESTED IN ACCORDANCE WITH ASTM C478. THE CURING OF THE PRECAST UNITS SHALL CONFORM TO SECTION 207-2.7 OF THE STANDARD SPECIFICATIONS. AS AN ALTERNATE, THE UNITS MAY BE CURED USING SATURATED STEAM FOR A MINIMUM OF 12 HOURS FOLLOWED BY 6 DAYS OF WATER CURING OR MEMBRANE CURING. IF THE UNITS ARE CURED BY THE ALTERNATE METHOD, THEY SHALL NOT BE SHIPPED PRIOR TO 8 DAYS AFTER CASTING NOR UNTIL THE CONCRETE HAS ATTAINED A MINIMUM STRENGTH OF 4,000 PSI. THE RISER SECTIONS MAY BE REINFORCED OR UNREINFORCED. REINFORCED SECTIONS, INCLUDING ECCENTRIC CONES, SHALL HAVE A MINIMUM WALL THICKNESS OF 5" AND UNREINFORCED SECTIONS, INCLUDING CONES, SHALL HAVE A MINIMUM WALL THICKNESS OF 6". JOINTS SHALL BE TONGUE AND GROOVE AND SHALL BE ASSEMBLED USING CLASS "B" MORTAR. THE MORTARED JOINTS SHALL BE FLUSH AND TROWELED SMOOTH.

8. THE TOP PORTION OF THE PIPES WITHIN THE MANHOLE SHALL BE CUT OUT AS NECESSARY TO PROVIDE A CIRCULAR OPENING BETWEEN THE PIPE ENDS OF AT LEAST 42". THE CUT ENDS SHALL BE PLASTERED SMOOTH WITH CEMENT MORTAR FOR CONCRETE PIPE AND EPOXY FOR CLAY PIPE. THE CIRCULAR OPENING SHALL BE CUT PRIOR TO INSTALLATION OF THE RISER SECTIONS.

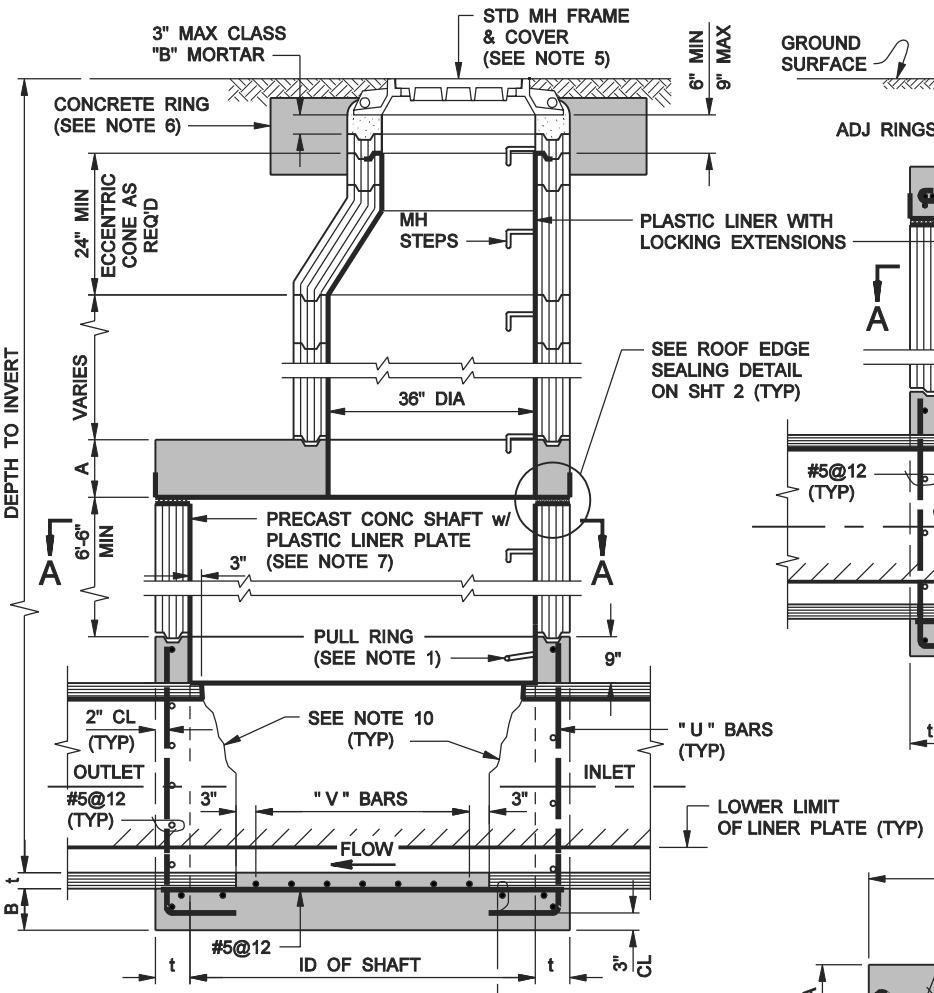

SECTION B-B

CASE I

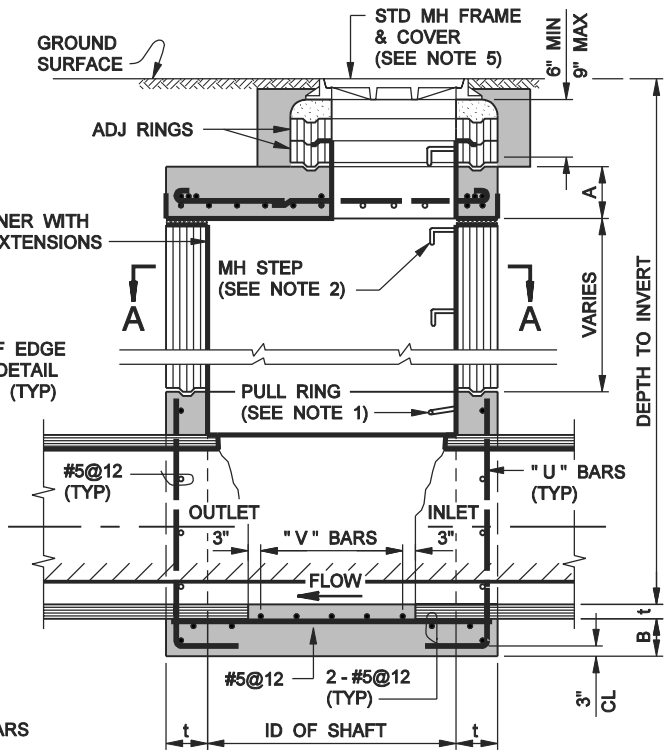

SECTION B-B

CASE II

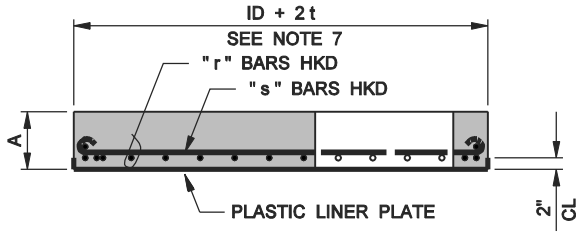

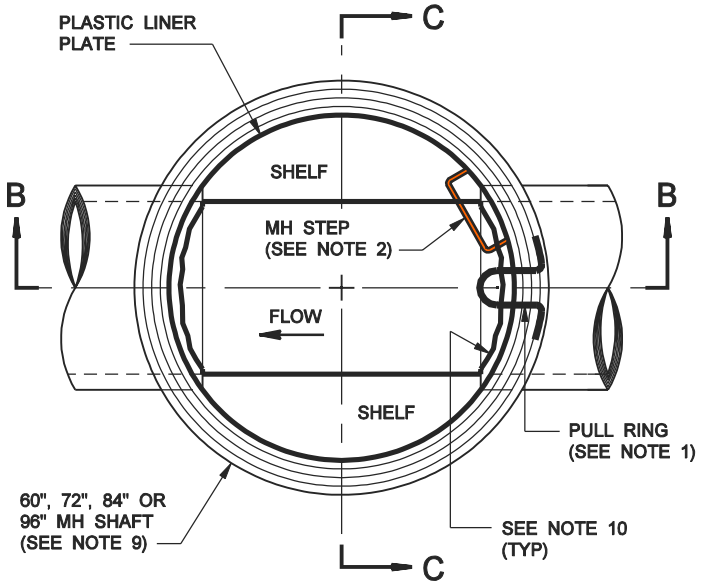

PLAN - SECTION A-A

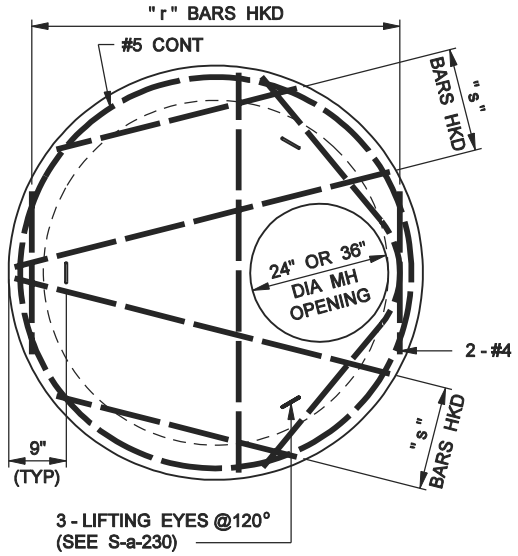

DETAIL OF FLAT SLAB TOP

24" OR 36" x 60", 72", 84" OR 96"

COUNTY SANITATION DISTRICTS OF LOS ANGELES COUNTY

OFFICE OF CHIEF ENGINEER

STEPHEN R. MAGUIN CHIEF ENGINEER	STANDARD MANHOLE, TYPE "E"	STANDARD DRAWING 2006 EDITION S - a - 2 0 6 SHEET 1 OF 4

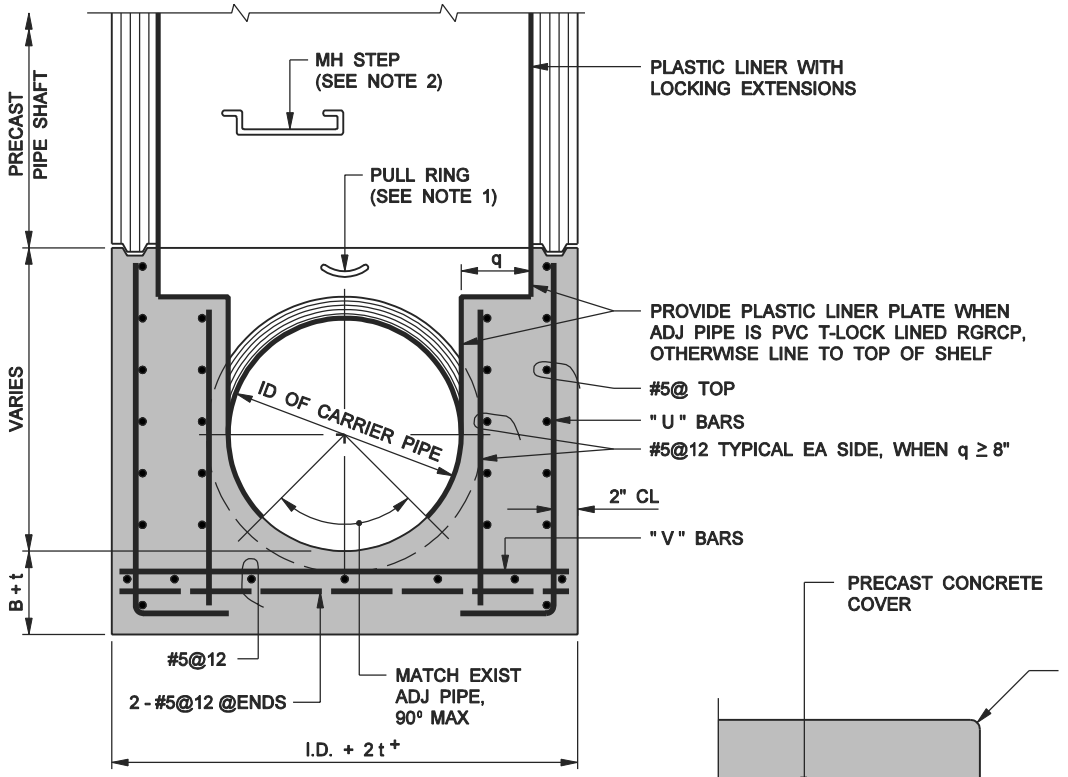

SECTION C-C

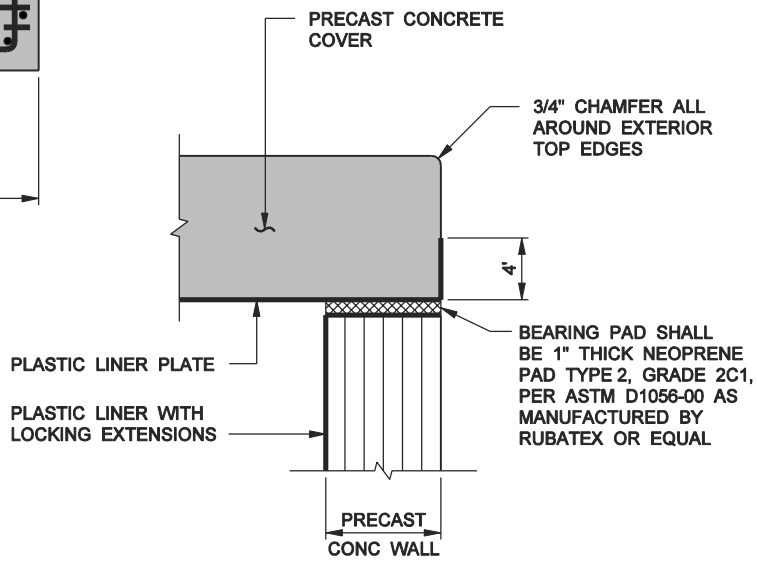

ROOF EDGE SEALING DETAIL

TABLE OF REINFORCING BARS

SHAFT DIA	DEPTH TO INV	DIMENSIONS		REINFORCING BARS			
		A	B	" r "	" s "	" u "	" v "
60"	UP TO 15'	10"	8"	#6@6	#6@6	#5@12	#5@12
	16' TO 30'	12"	10"	#7@6	#7@6	#6@10	#6@12
72"	UP TO 15'	10"	8"	#6@6	#6@6	#5@12	#5@12
	16' TO 30'	12"	10"	#8@6	#8@6	#7@12	#7@12
84"	UP TO 15'	10"	10"	#7@6	#7@6	#5@12	#5@12
	16' TO 30'	14"	10"	#8@6	#8@6	#7@12	#8@12
96"	UP TO 15'	12"	10"	#7@6	#7@6	#6@12	#6@12
	16' TO 30'	15"	12"	#8@6	#8@6	#7@6	#8@12

NOTES:

1. ALL MANHOLES SHALL BE PROVIDED WITH A STANDARD PULL RING IN ACCORDANCE WITH S-a-220. THE PULL RING SHALL BE LOCATED 5" ABOVE THE TOP OF PIPE ON THE UPSTREAM SIDE OF THE MANHOLE AND ALONG THE AXIS OF THE DOWNSTREAM OUTLET. WHERE THE MANHOLE IS TO BE USED AS A DOWNSTREAM SIPHON MANHOLE, IT SHALL BE PROVIDED WITH AN ADDITIONAL STANDARD PULL RING, BUT LOCATED 5" ABOVE THE TOP OF PIPE ON THE DOWNSTREAM SIDE OF THE MANHOLE AND ON THE CENTERLINE OF THE UPSTREAM SIPHON PIPE.

2. MANHOLE STEPS SHALL BE IN ACCORDANCE WITH S-a-209 AND SHALL BE UNIFORMLY SPACED NOT MORE THAN 16" APART. THE TOP STEP SHALL BE PLACED WITHIN 16" BELOW THE MANHOLE FRAME. THE BOTTOM MANHOLE STEP SHALL BE PLACED WITHIN 16" ABOVE THE SHELF. IN MANHOLE SHAFTS 36" IN DIAMETER AND LARGER, THE MANHOLE STEP SHALL PROJECT 5". IN MANHOLE SHAFTS SMALLER THAN 36" IN DIAMETER, THE MANHOLE STEP SHALL PROJECT 4". THE MANHOLE STEPS SHALL BE PLACED SUCH THAT THEY ARE ADJACENT TO BUT NOT INTERFERING WITH ACCESS TO THE PULL RING.

3. THE MANHOLE SHALL BE PROVIDED WITH PLASTIC LINER WITH LOCKING EXTENSIONS. PLASTIC LINER WITH LOCKING EXTENSIONS SHALL BE IN ACCORDANCE WITH THE STANDARD SPECIFICATIONS. THE LINER SHALL EXTEND FROM THE BOTTOM OF THE ADJUSTING RINGS TO THE TOP OF THE SHELF UNLESS THE ADJACENT PIPE IS LINED. IF THE ADJACENT PIPE IS LINED, THE LINER SHALL EXTEND TO A POINT IN THE CHANNEL MATCHING THE BOTTOM OF THE LINER IN THE LINED PIPE. LINER RETURNS SHALL BE PROVIDED WHERE THE LINER TERMINATES AT THE ADJUSTING RING AND THE SHELF. THE JOINT BETWEEN THE LINER AND THE STAINLESS STEEL STEPS AND PULL RINGS SHALL BE THOROUGHLY SEALED WITH MASTIC SEAM MATERIAL AS MANUFACTURED BY LINABOND INC., SYLMAR, CALIFORNIA (818) 362-7373, OR EQUAL. APPLICATION OF SEALANT AND PREPARATION OF SURFACES SHALL BE IN STRICT CONFORMANCE WITH THE MANUFACTURER'S DIRECTIONS.

4. UNLESS OTHERWISE SPECIFIED, ALL CONCRETE SHALL BE 660-B-4000 AND ALL REINFORCING BARS SHALL BE DEFORMED BARS CONFORMING TO ASTM-A706 GRADE 60.

5. IN PAVED AREAS SUBJECT TO TRAFFIC, A 24" TRAFFIC MANHOLE FRAME AND COVER IN ACCORDANCE WITH S-a-228 SHALL BE PROVIDED. IN ALL OTHER AREAS, A 24" LOCKING MANHOLE FRAME AND COVER IN ACCORDANCE WITH S-a-207 SHALL BE PROVIDED. IF A 36" MANHOLE FRAME WITH 30" COVER IS REQUIRED, A FRAME AND COVER IN ACCORDANCE WITH S-a-226 SHALL BE PROVIDED.

6. A 12" WIDE BY 12" HIGH CONCRETE RING SHALL BE PROVIDED AROUND THE MANHOLE FRAME. IN UNPAVED AREAS, THE CONCRETE RING SHALL BE PROVIDED WITH #3 REBAR, 30 DIAMETER LAP.

NOTES:

7. EXCEPT AS NOTED HEREON, THE PRECAST UNITS SHALL BE MANUFACTURED AND TESTED IN ACCORDANCE WITH ASTM C478. THE CURING OF THE PRECAST UNITS SHALL CONFORM TO SECTION 207-2.7 OF THE STANDARD SPECIFICATIONS. AS AN ALTERNATE, THE UNITS MAY BE CURED USING SATURATED STEAM FOR A MINIMUM OF 12 HOURS FOLLOWED BY 6 DAYS OF WATER CURING OR MEMBRANE CURING. IF THE UNITS ARE CURED BY THE ALTERNATE METHOD, THEY SHALL NOT BE SHIPPED PRIOR TO 8 DAYS AFTER CASTING NOR UNTIL THE CONCRETE HAS ATTAINED A MINIMUM STRENGTH OF 4,000 PSI. THE RISER SECTIONS MAY BE REINFORCED OR UNREINFORCED. REINFORCED SECTIONS, INCLUDING ECCENTRIC CONES, SHALL HAVE A MINIMUM WALL THICKNESS OF 5" AND UNREINFORCED SECTIONS, INCLUDING CONES, SHALL HAVE A MINIMUM WALL THICKNESS OF 6". JOINTS SHALL BE TONGUE AND GROOVE AND SHALL BE ASSEMBLED USING CLASS "B" MORTAR. THE MORTARED JOINTS SHALL BE FLUSH AND TROWELED SMOOTH.

8. UNLESS OTHERWISE INDICATED ON THE DRAWINGS, CASE I OR II MAY BE USED BY THE CONTRACTOR AT HIS OPTION CONSISTENT WITH DIAMETER COVER LIMITATIONS INDICATED HEREON.

   CASE I SHALL NOT BE USED FOR COVER ON PIPE LESS THAN 12′.

   CASE II SHALL NOT BE USED FOR COVER ON PIPE MORE THAN 12′.

9. RISER SECTIONS 60" THROUGH 96" I.D. SHALL BE REINFORCED IN ACCORDANCE WITH ASTM C 478 AND SHALL HAVE THE FOLLOWING MINIMUM WALL THICKNESS (t).

   60" I.D. - 5"; 72" I.D. - 6"; 84" I.D. - 7"; 96" I.D. - 8".

10. THE TOP PORTION OF THE PIPES WITHIN THE MANHOLE SHALL BE CUT OUT AS NECESSARY TO PROVIDE A CIRCULAR OPENING BETWEEN THE PIPE ENDS OF AT LEAST 54" IN THE 60" DIAMETER MANHOLE AND 66" IN THE 72" DIAMETER MANHOLE, 78" IN THE 84" DIAMETER MANHOLE AND 90" IN THE 96" DIAMETER MANHOLE. THE CUT ENDS SHALL BE PLASTERED SMOOTH WITH CEMENT MORTAR FOR CONCRETE PIPE AND EPOXY FOR CLAY PIPE. THE CIRCULAR OPENING SHALL BE CUT PRIOR TO INSTALLATION OF THE RISER SECTIONS.

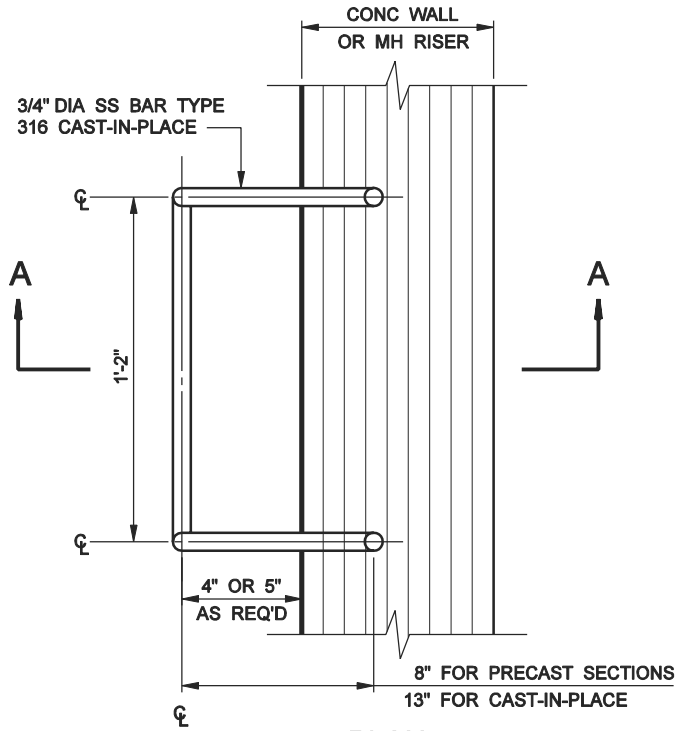

PLAN

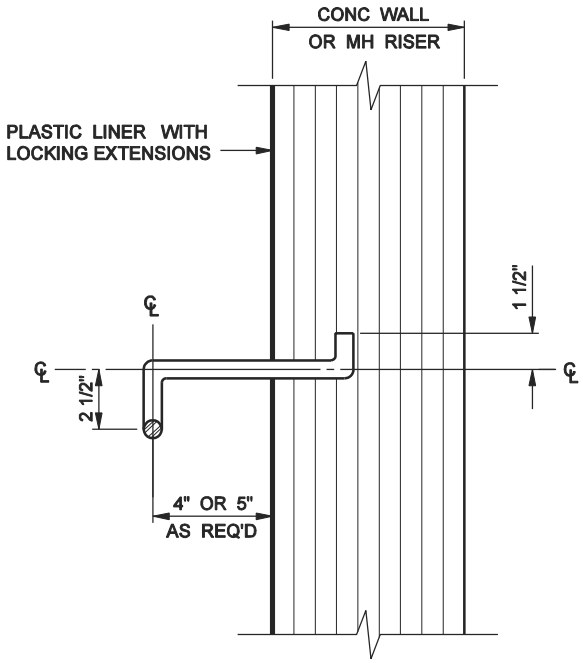

SECTION A-A

TYPE I MANHOLE STEP

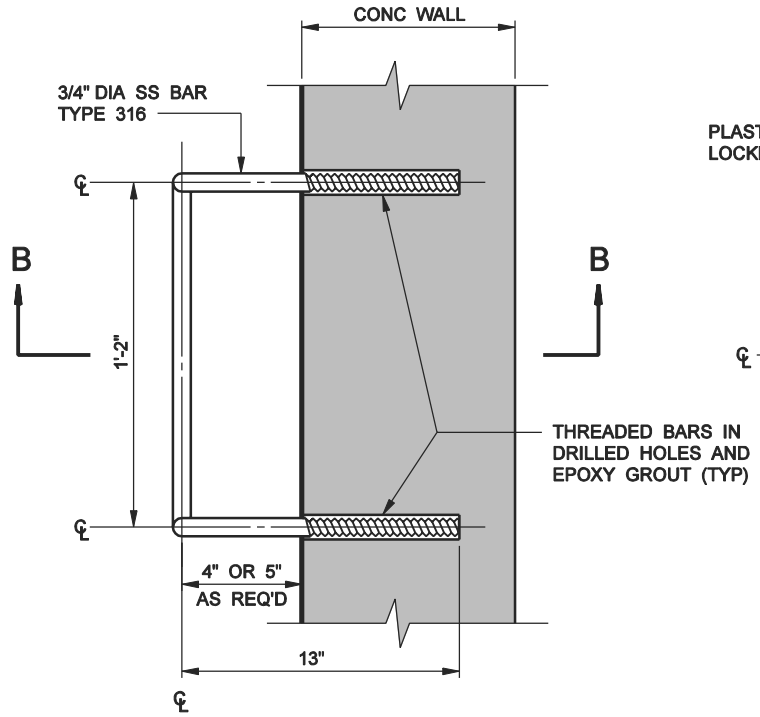

PLAN

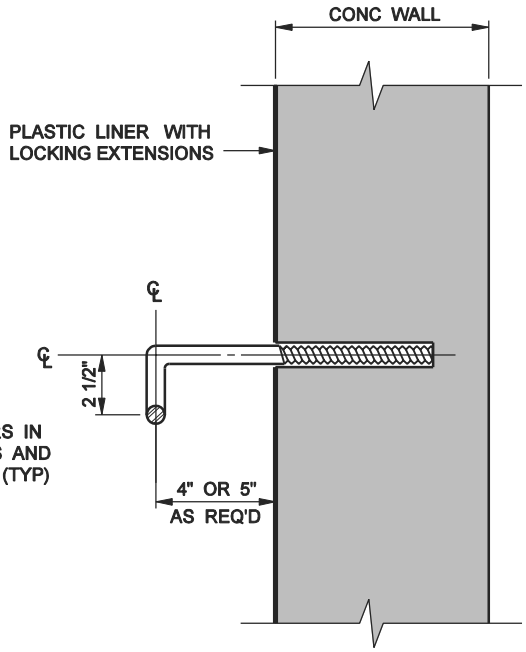

SECTION B-B

TYPE II MANHOLE STEP

COUNTY SANITATION DISTRICTS OF LOS ANGELES COUNTY
OFFICE OF CHIEF ENGINEER

STEPHEN R. MAGUIN CHIEF ENGINEER	STANDARD MANHOLE STEP	STANDARD DRAWING 2006 EDITION S - a - 2 0 9 SHEET 1 OF 1

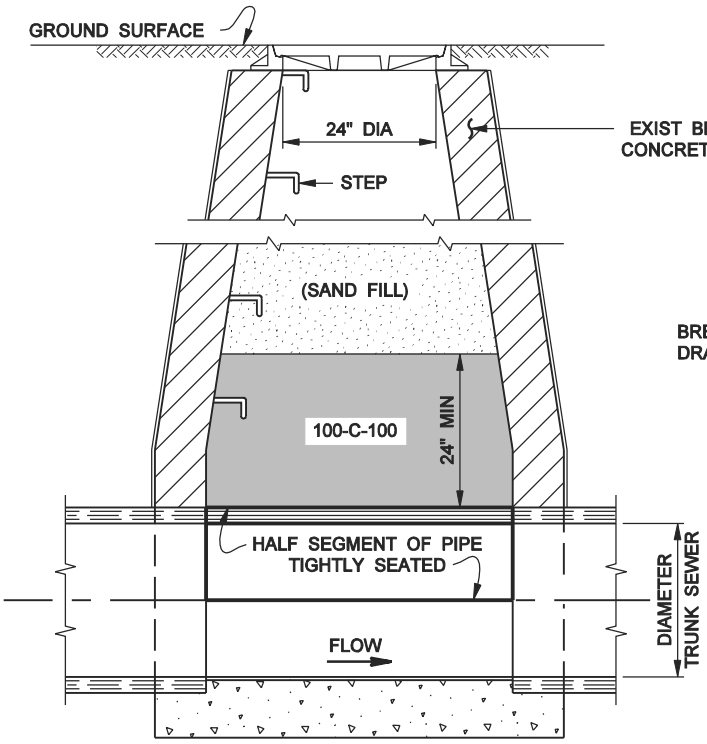

LONGITUDINAL SECTION

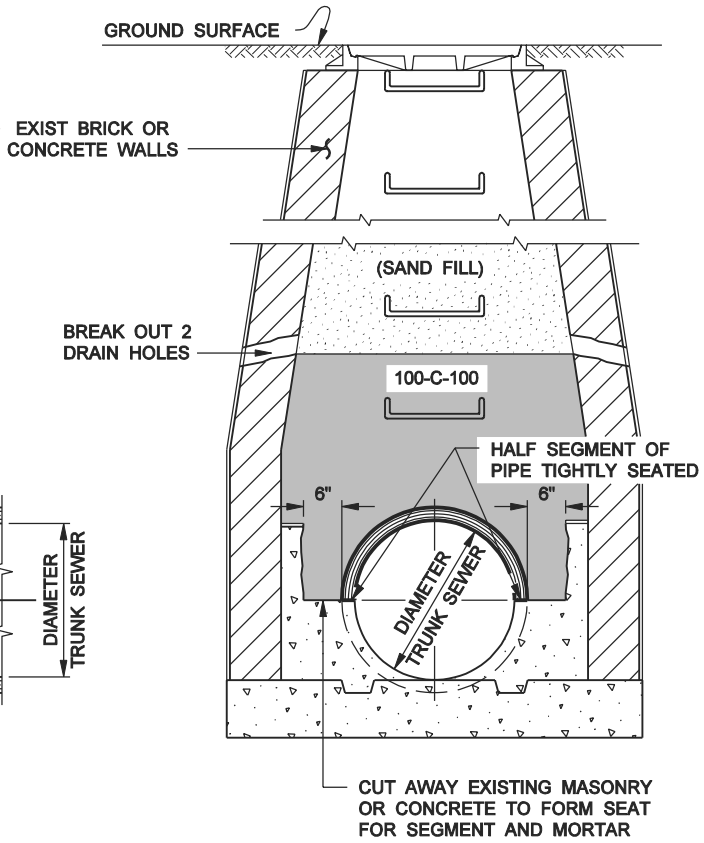

CROSS SECTION

NOTES:

1. FORTY-EIGHT HOURS PRIOR TO COMMENCING THE ABANDONMENT OF THE MANHOLE. THE CONTRACTOR SHALL CONTACT THE DISTRICTS' SUPERINTENDENT OF MAINTENANCE AT (323) 774-7272.
2. NO WORK SHALL BE DONE ON MANHOLE EXCEPT IN THE PRESENCE OF COUNTY SANITATION DISTRICT REPRESENTATIVE.
3. MANHOLE FRAME AND COVER OF THE MANHOLE TO BE ABANDONED SHALL BE SALVAGED, CLEANED AND DELIVERED TO THE DISTRICTS' COMPTON FIELD OFFICE, 920 SOUTH ALAMEDA STREET, COMPTON, CALIFORNIA.
4. THE CONTRACTOR SHALL REMOVE A MINIMUM OF THREE FEET OF THE MANHOLE SHAFT BELOW STREET SUBGRADE.
5. IF THE LOWER PORTION OF THE EXISTING CHANNEL THROUGH THE MANHOLE IS NOT AS SHOWN. THE CHANNEL SHALL BE REFORMED AS DIRECTED BY THE COUNTY SANITATION DISTRICT REPRESENTATIVE.
6. HALF SEGMENT OF PIPE SHALL BE OF THE TYPE USED IN THE SEWER.

COUNTY SANITATION DISTRICTS OF LOS ANGELES COUNTY
OFFICE OF CHIEF ENGINEER

STEPHEN R. MAGUIN
CHIEF ENGINEER

STANDARD ABANDONMENT OF EXISTING MANHOLES TYPE "A" OR "D"

STANDARD DRAWING
2006 EDITION
S - a - 2 1 8
SHEET 1 OF 1

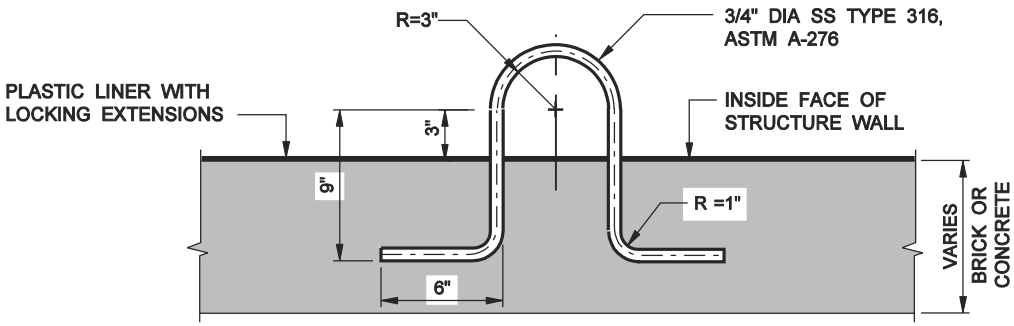

FOR CONCRETE STRUCTURE OR TYPE "A" MANHOLE WALL

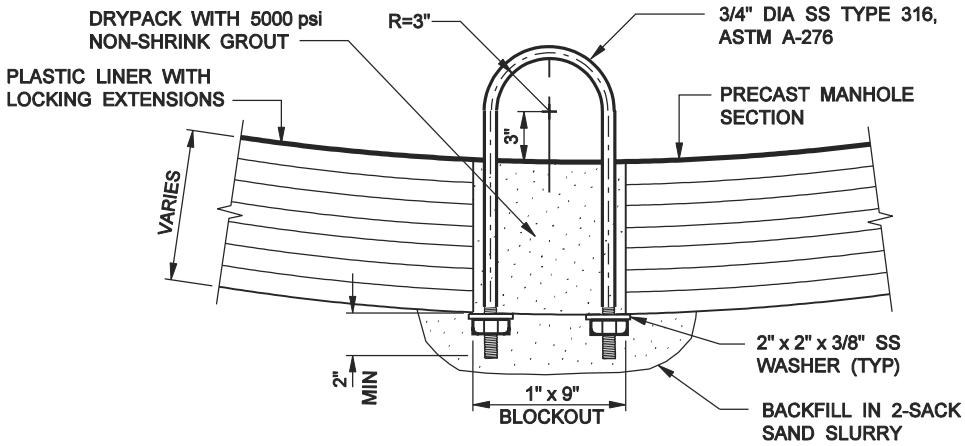

FOR PRECAST MANHOLE SECTION OR CONCRETE WALL LESS THAN 8"

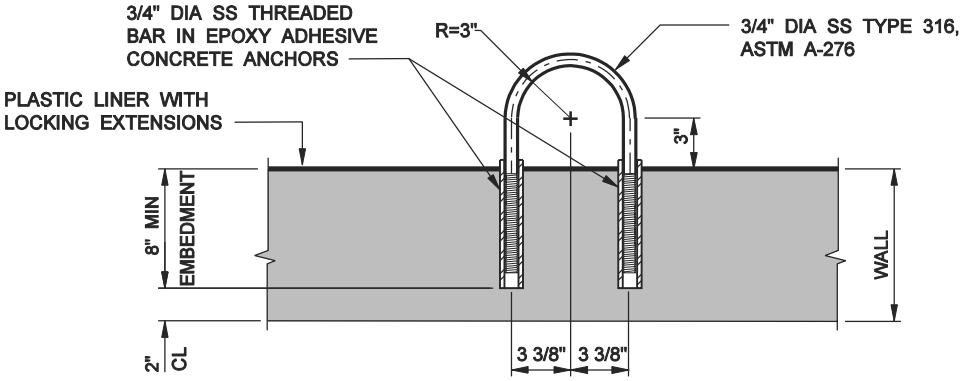

ALTERNATE PULL RING FOR CONCRETE STRUCTURE

COUNTY SANITATION DISTRICTS OF LOS ANGELES COUNTY
OFFICE OF CHIEF ENGINEER

STEPHEN R. MAGUIN CHIEF ENGINEER	STANDARD PULL RING	STANDARD DRAWING 2006 EDITION S - a - 2 2 0 SHEET 1 OF 1

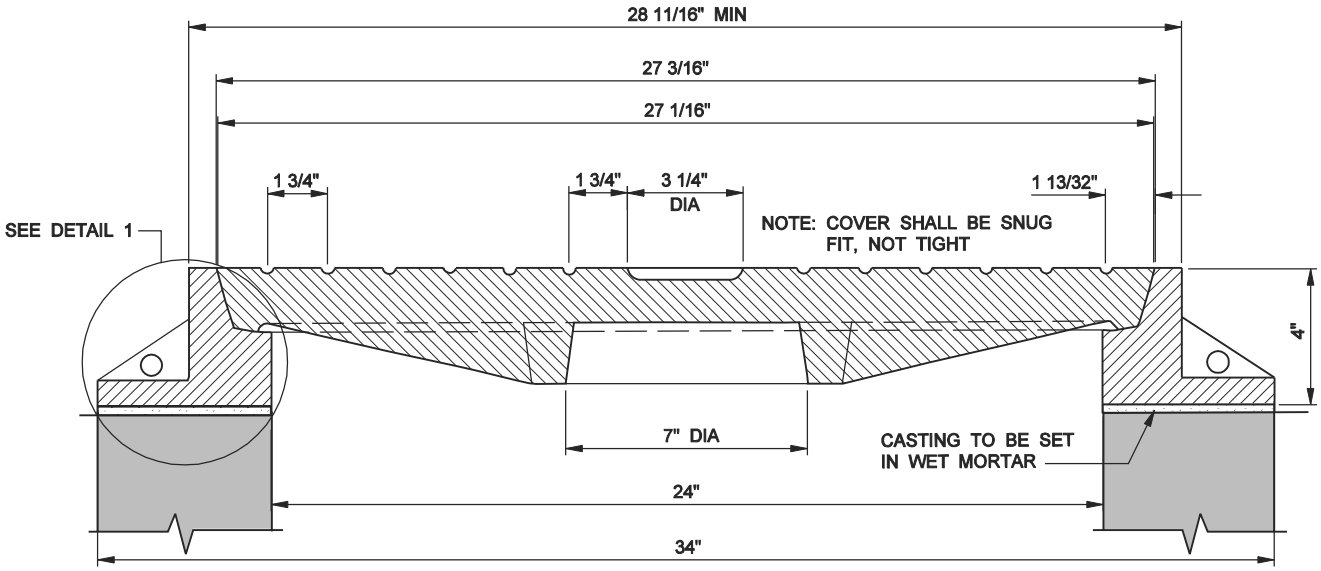

SECTION
MANHOLE FRAME AND COVER

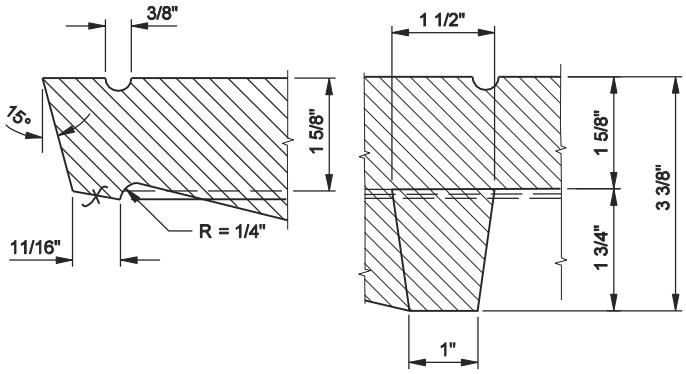

SECTION A-A

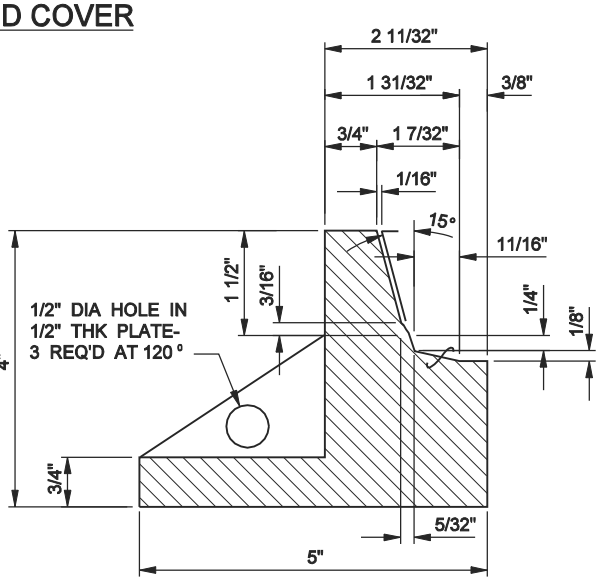

DETAIL 1

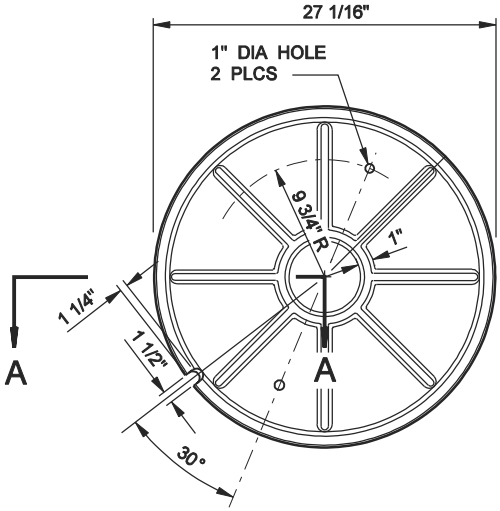

PLAN OF COVER
BOTTOM VIEW

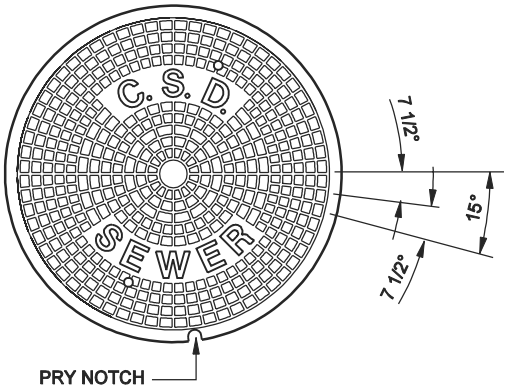

PLAN OF COVER
TOP VIEW

NOTE:
FOR NOTES SEE S-a-207.

COUNTY SANITATION DISTRICTS OF LOS ANGELES COUNTY
OFFICE OF CHIEF ENGINEER

STEPHEN R. MAGUIN
CHIEF ENGINEER

STANDARD 24" TRAFFIC MANHOLE FRAME AND COVER

STANDARD DRAWING
2006 EDITION
S - a - 2 2 8
SHEET 1 OF 1

APPENDIX X

BURLINGTON NORTHERN & SANTA FE RAILWAY COMPANY

LICENSE AGREEMENT FOR 24" CITY WATER
LICENSE AGREEMENT FOR 10" CITY SEWER

DEL AMO BLVD EXTENSION, T-30

PIPELINE LICENSE
BNSF Railway Company

The Table below summarizes information and requirements from the above-referenced Agreement between the City and BNSF Railway Company. The purpose is to inform a prospective Bidder and Contractor.

Sec. 2	☐ Shall not disturb any improvements of Licensor
Sec. 3	☐ Shall use Premises solely for construction & maintenance of a PIPELINE ☐ Covenants that it will not handle or transport "hazardous waste" through the PIPELINE on Licensor's property
Sec. 5	☐ Any contractors or subcontractors performing work on the PIPELINE or entering Premises on behalf of Licensee shall be deemed servants and agents of Licensee
Sec. 7(b)	☐ Agrees to reimburse Licensor for all costs and expenses incurred by Licensor, including but not limited to the furnishing of Licensor's Flagman and any vehicle rental costs incurred ▪ Estimated cost for one flagger is $800.00 for an 8 hour basic day.
Sec. 7(c)	☐ All invoices are due 30 days after the date of invoice
Sec. 8(a)	☐ Shall comply with all laws relating to the construction, maintenance, and use of the PIPELINE and use of Premises.
Sec. 8(b)	☐ Contractor shall complete the safety-training program at the following Internet Website http://www.contractororientation.com ▪ This training must be completed no more than one year in advance of entry on the Premises.
Sec. 11(a)	☐ Shall notify Roadmaster at 7427 Rosemead Blvd, Pico Rivera, CA 90680, telephone (323)307-5815 (Office) or (323)864-3852 (Cell), at least 5 business days prior to installation of the PIPELINE and prior to entering the Premises for any subsequent maintenance thereon.
Sec. 11(b)	☐ In performing the work, Licensee shall use only public roadways to cross from one side of Licensor's tracks to the other.
Sec. 12(a)	☐ Licensee shall not be permitted to use mechanized equipment, or place or store any mechanized equipment, tools or other materials, within 25 feet of centerline of any railroad track, unless Licensee has obtained prior written approval. ☐ Perform all activities as not to be a source of danger to or interference with property of Licensor ▪ If ordered to cease using Premises at any time by Licensor due to any hazardous condition, Licensee shall immediately do so. ▪ It is Licensee's responsibility to ensure that use of the Premises is safe.

Sec. 12(b)	☐ Licensor may direct one of its field engineers to observe or inspect construction and/or maintenance of the PIPELINE at any time ○ Licensee shall immediately halt construction or maintenance of the PIPELINE if directed by Licensor due to non-compliance with any hazardous condition
Sec. 13	☐ Construction of the PIPELINE shall be completed within one year of the Effective Date.
Sec. 15(a)	☐ Before conducting any boring work, Licensee shall explore the proposed location for such work with hand tools to a depth of at least 3 feet below the surface or ground. ▪ Licensee can use suitable detection equipment or other generally accepted industry practice (e.g. consulting with Underground Services Association) to determine existence or location of pipelines and other subsurface structures. ▪ Upon written request, Licensor will provide Licensee any information that Licensor has concerning the location of Licensor's underground utilities and pipelines. Licensee does not warrant the accuracy or completeness of information. ▪ Prior to conducting any such boring work, Licensee will review all such material.
Sec. 15(b)	• Soil investigation is needed to be performed by Licensee and reviewed by Licensor before construction for all bores greater than 26-inch diameter and at a depth less than 10.0 feet below bottom of rail.
Sec. 16	• Any open hole, boring or well constructed on Premises by Licensee shall be safely covered and secured at all times when Licensee is not working in the actual vicinity. • Upon completion of that portion of work, all holes and borings constructed on Premises shall be: ○ Filled in to surrounding ground level with compacted bentonite groul or ○ Otherwise secured or retired in accordance with any applicable Legal Requirement. No excavated materials may remain on Licensor's property for more than 10 days.
Sec. 18	☐ Licensee's on-site supervisions shall retain/maintain fully executed copy of License at all times while on Premises
Sec. 19(a)	☐ Contractor shall release, indemnify, defend and hold harmless licensor from and against any and all claims resulting from or related to: ▪ This license ▪ Any rights or interests granted pursuant to this license ▪ Licensee's occupation & use of Premises ▪ Environmental condition of the Premises ▪ Any act or omission of licensee
Sec. 19(b)	☐ Shall, and shall cause its contractor to, now and forever waive any and all claims.
Sec. 19(c)	☐ Contractor agrees, regardless of any negligence of any indemnitee to indemnify, and hold harmless the indemnitees against and assume the defense of any liabilities.

Sec. 19(d)	☐ Agrees to assume the defense of any lawsuit brought against any Indemnitee relating to any matter covered by this License.
Sec. 20	• All personal property upon Premises will be at the risk of Licensee ○ No indemnitee will be liable for any damage thereto or theft thereof

Sec. 21A	• Commercial General Liability Insurance: minimum of $5,000,000 each occurrence and an aggregate limit of at least $10,000,000.
	• Coverage must be purchased on a post 1998 ISO occurrence or equivalent and include:
	  ○ Bodily Injury and Property Damage
	  ○ Personal Injury and Advertising Injury
	  ○ Fire legal liability
	  ○ Products and completed operations
	• Policy shall also contain the following endorsements, which shall be indicated on the certificate of insurance:
	  ○ Employee and worker compensation related exclusions in above policy shall not apply with respect to claims related to railroad employees
	  ○ Definition of insured contract shall be amended to remove any exclusion or other limitation for any work being done within 50 feet of railroad property
	  ○ Any exclusions related to the explosion, collapse, and underground hazards shall be removed
	• No other endorsements limiting coverage may be included on the policy.

Sec. 21B	• Business Automobile Insurance: at least $1,000,000 per occurrence:
	  ○ Bodily injury or property damage
	  ○ Any and all vehicles owned, used or hired

Sec. 21C	• Workers Comp and Employers Liability Insurance: ○ Employer's Liability with limits of at least $500,000 each accident, $500,000 by disease policy limit, $500,000 by disease each employer
Sec. 21D	• Construction of the pipeline shall be completed within 1 year of the Effective Date

Sec. 21 Other Requirements	• Construction of the pipeline shall be completed within 1 year of the Effective Date • Certificate of insurance must reflect waiver of subrogation endorsement • Licensee further waives its right of recovery, and its insurers also waive their right of subrogation against Licensor for loss of its owned or leased property • Licensee's insurance policies through policy endorsement must state that the policy shall be primary and non-contributing with respect to any insurance carried by Licensor • All policy(ies) required above shall include a severability of interest endorsement, and shall name Licensor and Staubach Global Services – RR, Inc. as an additional insured on the certificate of Insurance. • Prior to commencing the Work, Licensee shall furnish to Licensor an acceptable certificate(s) of Insurance including an original signature • Policy(ies) shall contain a provision that obligates the insurance company(ies) issuing policy(ies) to notify Licensor in writing at least 30 days prior to any cancellation, non-renewal, substitution or material alteration ○ Shall be indicated on certificate of insurance • Any insurance policy shall be written by a reputable insurance company acceptable to Licensor or with a current Best's Guide Rating or A- and Class VII or better • Allocated Loss Expense shall be in addition to all policy limits for coverages referenced above • If any portion of the operation is to be subcontracted, Licensee shall require that the subcontractor shall provide and maintain insurance coverages as set forth herein, naming Licensor as an additional insured, and shall require that the subcontractor shall release, defend and indemnify Licensor to the same extent and under the same terms and conditions as Licensee is required to release, defend and indemnify Licensor herein
Sec. 22(a)	• Licensee shall strictly comply with all federal, state, and local environmental laws and regulations in its use of the Premises. • Licensee shall not maintain a treatment, storage, transfer or disposal facility, or underground storage tank on the Premises • Licensee shall not release or suffer the release of oil or hazardous substances
Sec. 22(b)	• Licensee shall give immediate notice to Resource Operations Center at (800)832-5452 of any release of hazardous substances, violation of Environmental Laws, or inspection or inquiry by governmental authorities charged with enforcing Environmental Laws
Sec. 22(d)	• Licensee shall promptly report to Licensor in writing any conditions or activities upon the Premises known to Licensee which create a risk of harm to persons, property or the environment and shall take whatever action is necessary to prevent injury
Sec. 27	• Licensee shall promptly pay and discharge any and all liens arising out of any construction.

PIPELINE LICENSE

THIS LICENSE ("License"), made as of the 28th day of April, 2009 ("Effective Date") by and between **BNSF RAILWAY COMPANY**, a Delaware corporation ("Licensor") and **CITY OF TORRANCE**, ("Licensee").

NOW THEREFORE, in consideration of the mutual covenants contained herein, the parties agree to the following:

GENERAL

1. Licensor hereby grants Licensee a non-exclusive license, subject to all rights, interests, and estates of third parties, including, without limitation, any leases, use rights, easements, liens, or other encumbrances, and upon the terms and conditions set forth below, to construct and maintain, in strict accordance with the drawings and specifications approved by Licensor as part of Licensee's application process (the "Drawings and Specifications"), one (1) Pipeline(s), Twenty-Four (24") inches in diameter inside a Thirty-Six (36") inch steel casing ("PIPELINE"), across or along the rail corridor of Licensor at or near the station of Torrance, County of Los Angeles, State of California, Line Segment 7604, Mile Post 20.19, as shown on the attached Drawing No. 1-45682, dated February 2, 2009, attached hereto as Exhibit "A" and made a part hereof ("Premises").

2. Licensee shall not disturb any improvements of Licensor or Licensor's existing lessees, Licensees, easement beneficiaries or lien holders, if any, or interfere with the use of such improvements.

3. Licensee shall use the Premises solely for construction and maintenance of a PIPELINE in accordance with the Drawings and Specifications carrying potable water. Licensee shall not use the PIPELINE to carry any other commodity or use the Premises for any other purpose.

   Licensee covenants that it will not handle or transport "hazardous waste" or "hazardous substances", as "hazardous waste" and "hazardous substances" may now or in the future be defined by any federal, state, or local governmental agency or body through the PIPELINE on Licensor's property. Licensee agrees periodically to furnish Licensor with proof, satisfactory to Licensor that Licensee is in such compliance. Should Licensee not comply fully with the above-stated obligations of this Section, notwithstanding anything contained in any other provision hereof, Licensor may, at its option, terminate this License by serving five (5) days' notice of termination upon Licensee. Upon termination, Licensee shall remove the PIPELINE and restore Licensor's property as herein elsewhere provided.

4. In case of the eviction of Licensee by anyone owning or claiming title to or any interest in the Premises, or by the abandonment by Licensor of the affected rail corridor, Licensor shall not be liable to refund Licensee any compensation paid hereunder, except for the pro-rata part of any recurring charge paid in advance, or for any damage Licensee sustains in connection therewith.

5. Any contractors or subcontractors performing work on the PIPELINE or entering the Premises on behalf of Licensee shall be deemed servants and agents of Licensee for purposes of this License.

TERM

6. This License shall commence on the Effective Date and shall continue for a period of twenty-five (25) years, subject to prior termination as hereinafter described.

COMPENSATION

7. (a) Licensee shall pay Licensor, prior to the Effective Date, the sum of Two Thousand Five Hundred and No/100 Dollars ($2500) as compensation for the use of the Premises.

(b) Licensee agrees to reimburse Licensor (within thirty (30) days after receipt of bills therefor) for all costs and expenses incurred by Licensor in connection with Licensee's use of the Premises or the presence, construction and maintenance of the PIPELINE, including but not limited to the furnishing of Licensor's Flagman and any vehicle rental costs incurred. The cost of flagger services provided by the Railway, when deemed necessary by the Railway's representative, will be borne by the Licensee. The estimated cost for one (1) flagger is $800.00 for an eight (8) hour basic day with time and one-half or double time for overtime, rest days and holidays. The estimated cost for each flagger includes vacation allowance, paid holidays, Railway and unemployment insurance, public liability and property damage insurance, health and welfare benefits, transportation, meals, lodging and supervision. Negotiations for Railway labor or collective bargaining agreements and rate changes authorized by appropriate Federal authorities may increase actual or estimated flagging rates. The flagging rate in effect at the time of performance by the Contractor hereunder will be used to calculate the actual costs of flagging pursuant to this paragraph.

(c) All invoices are due thirty (30) days after the date of invoice. In the event that Licensee shall fail to pay any monies due to Licensor within thirty (30) days after the invoice date, then Licensee shall pay interest on such unpaid sum from thirty (30) days after its invoice date to the date of payment by Licensee at an annual rate equal to (i) the greater of (a) for the period January 1 through June 30, the prime rate last published in *The Wall Street Journal* in the preceding December plus two and one-half percent (2 1/2%), and for the period July 1 through December 31, the prime rate last published in *The Wall Street Journal* in the preceding June plus two and one-half percent (2 1/2%), or (b) twelve percent (12%), or (ii) the maximum rate permitted by law, whichever is less.

COMPLIANCE WITH LAWS

8. (a) Licensee shall observe and comply with any and all laws, statutes, regulations, ordinances, orders, covenants, restrictions, or decisions of any court of competent jurisdiction ("Legal Requirements") relating to the construction, maintenance, and use of the PIPELINE and the use of the Premises.

   (b) Prior to entering the Premises, Licensee shall and shall cause its contractor to comply with all Licensor's applicable safety rules and regulations. Prior to commencing any work on the Premises, Licensee shall complete and shall require its contractor to complete the safety-training program at the following Internet Website "http://www.contractororientation.com". This training must be completed no more than one year in advance of Licensee's entry on the Premises.

DEFINITION OF COST AND EXPENSE

9. For the purpose of this License, "cost' or "costs" "expense" or "expenses" includes, but is not limited to, actual labor and material costs including all assignable additives, and material and supply costs at current value where used.

RIGHT OF LICENSOR TO USE

10. Licensor excepts and reserves the right, to be exercised by Licensor and any other parties who may obtain written permission or authority from Licensor:

    (a) to maintain, renew, use, operate, change, modify and relocate any existing pipe, power, communication lines and appurtenances and other facilities or structures of like character upon, over, under or across the Premises;

    (b) to construct, maintain, renew, use, operate, change, modify and relocate any tracks or additional facilities or structures upon, over, under or across the Premises; or

    (c) to use the Premises in any manner as the Licensor in its sole discretion deems appropriate, provided Licensor uses all commercially reasonable efforts to avoid material interference with the use of the Premises by Licensee for the purpose specified in Section 3 above.

LICENSEE'S OPERATIONS

11. (a) Licensee shall notify Licensor's Roadmaster at 7427 Rosemead Blvd., Pico Rivera, CA 90660, telephone (323) 307-5815(Office) or (323) 864-3852 (Cell), at least five (5) business days prior to installation of the PIPELINE and prior to entering the Premises for any subsequent maintenance thereon.

    (b) In performing the work described in Section 3, Licensee shall use only public roadways to cross from one side of Licensor's tracks to the other.

12. (a) Under no conditions shall Licensee be permitted to conduct any tests, investigations or any other activity using mechanized equipment and/or machinery, or place or store any mechanized equipment, tools or other materials, within twenty-five (25) feet of the centerline of any railroad track on the Premises unless Licensee has obtained prior written approval from Licensor. Licensee shall, at its sole cost and expense, perform all activities on and about the Premises in such a manner as not at any time to be a source of danger to or interference with the existence or use of present or future tracks, roadbed or property of Licensor, or the safe operation and activities of Licensor. If ordered to cease using the Premises at any time by Licensor's personnel due to any hazardous condition, Licensee shall immediately do so. Notwithstanding the foregoing right of Licensor, the parties agree that Licensor has no duty or obligation to monitor Licensee's use of the Premises to determine the safe nature thereof, it being solely Licensee's responsibility to ensure that Licensee's use of the Premises is safe. Neither the exercise nor the failure by Licensor to exercise any rights granted in this Section will alter the liability allocation provided by this License.

(b) Licensee shall, at its sole cost and expense, construct and maintain the PIPELINE in such a manner and of such material that it will not at any time be a source of danger to or interference with the existence or use of present or future tracks, roadbed or property of Licensor, or the safe operation and activities of Licensor. Licensor may direct one of its field engineers to observe or inspect the construction and/or maintenance of the PIPELINE at any time for compliance with the Drawings and Specifications. If ordered at any time to halt construction or maintenance of the PIPELINE by Licensor's personnel due to non-compliance with the same or any other hazardous condition, Licensee shall immediately do so. Notwithstanding the foregoing right of Licensor, the parties agree that Licensor has no duty or obligation to observe or inspect, or to halt work on, the PIPELINE, it being solely Licensee's responsibility to ensure that the PIPELINE is constructed in strict accordance with the Drawings and Specifications and in a safe and workmanlike manner in compliance with all terms hereof. Neither the exercise nor the failure by Licensor to exercise any right granted by this Section will alter in any way the liability allocation provided by this License. If at any time Licensee shall, in the sole judgment of Licensor, fail to properly perform its obligations under this Section, Licensor may, at its option and at Licensee's sole expense, arrange for the performance of such work as it deems necessary for the safety of its operations and activities. Licensee shall promptly reimburse Licensor for all costs and expenses of such work, upon receipt of an invoice for the same. Licensor's failure to perform any obligations of Licensee shall not alter the liability allocation hereunder.

13. During the construction and any subsequent maintenance performed on the PIPELINE, Licensee shall perform such work in a manner to preclude damage to the property of Licensor, and preclude interference with the operation of its railroad. The construction of the PIPELINE shall be completed within one (1) year of the Effective

Date. Upon completion of the construction of the PIPELINE and after performing any subsequent maintenance thereon, Licensee shall, at Licensee's own cost and expense, restore Licensor's Premises to their former state as of the Effective Date of this License.

14. If at any time during the term of this License, Licensor shall desire the use of its rail corridor in such a manner as would, in Licensor's reasonable opinion, be interfered with by the PIPELINE, Licensee shall, at its sole expense, within thirty (30) days after receiving written notice from Licensor to such effect, make such changes in the PIPELINE as in the sole discretion of Licensor may be necessary to avoid interference with the proposed use of Licensor's rail corridor, including, without limitation, the relocation of the existing or the construction of a new PIPELINE(s).

15. (a) Prior to Licensee conducting any boring work on or about any portion of the Premises, Licensee shall explore the proposed location for such work with hand tools to a depth of at least three (3) feet below the surface of the ground to determine whether pipelines or other structures exist below the surface, provided, however, that in lieu of the foregoing, the Licensee shall have the right to use suitable detection equipment or other generally accepted industry practice (e.g., consulting with the Underground Services Association) to determine the existence or location of pipelines and other subsurface structures prior to drilling or excavating with mechanized equipment. Upon Licensee's written request, which shall be made thirty (30) business days in advance of Licensee's requested construction of the PIPELINE, Licensor will provide Licensee any information that Licensor has in the possession of its Engineering Department concerning the existence and approximate location of Licensor's underground utilities and pipelines at or near the vicinity of the proposed PIPELINE. Prior to conducting any such boring work, the Licensee will review all such material. Licensor does not warrant the accuracy or completeness of information relating to subsurface conditions and Licensee's operations will be subject at all times to the liability provisions herein.

(b) For all bores greater than 26-inch diameter and at a depth less than 10.0 feet below bottom of rail, a soil investigation will need to be performed by the Licensee and reviewed by Licensor prior to construction. This study is to determine if granular material is present, and to prevent subsidence during the installation process. If the investigation determines in Licensor's reasonable opinion that granular material is present, Licensor may select a new location for Licensee's use, or may require Licensee to furnish for Licensor's review and approval, in its sole discretion a remedial plan to deal with the granular material. Once Licensor has approved any such remedial plan in writing, Licensee shall, at its sole cost and expense, carry out the approved plan in accordance with all terms thereof and hereof.

16. Any open hole, boring or well constructed on the Premises by Licensee shall be safely covered and secured at all times when Licensee is not working in the actual vicinity thereof. Following completion of that portion of the work, all holes or borings constructed on the Premises by Licensee shall be:

(a) filled in to surrounding ground level with compacted bentonite grout; or

(b) otherwise secured or retired in accordance with any applicable Legal Requirement. No excavated materials may remain on Licensor's property for more than ten (10) days, but must be properly disposed of by Licensee in accordance with applicable Legal Requirements.

17. Upon termination of this License, Licensee shall, at its sole cost and expense:

(a) remove the PIPELINE and all appurtenances thereto, or, at the sole discretion of the Licensor, fill and cap or otherwise appropriately decommission the PIPELINE with a method satisfactory to Licensor;

(b) report and restore any damage to the Premises arising from, growing out of, or connected with Licensee's use of the Premises;

(c) remedy any unsafe conditions on the Premises created or aggravated by Licensee; and

(d) leave the Premises in the condition which existed as of the Effective Date of this License.

18. Licensee's on-site supervisions shall retain/maintain a fully executed copy of this License at all times while on the Premises.

<u>LIABILITY</u>

19. (a) TO THE FULLEST EXTENT PERMITTED BY LAW, LICENSEE SHALL, AND SHALL CAUSE ITS CONTRACTOR TO, RELEASE, INDEMNIFY, DEFEND AND HOLD HARMLESS LICENSOR AND LICENSOR'S AFFILIATED COMPANIES, PARTNERS, SUCCESSORS, ASSIGNS, LEGAL REPRESENTATIVES, OFFICERS, DIRECTORS, SHAREHOLDERS, EMPLOYEES AND AGENTS (COLLECTIVELY, "INDEMNITEES") FOR, FROM AND AGAINST ANY AND ALL CLAIMS, LIABILITIES, FINES, PENALTIES, COSTS, DAMAGES, LOSSES, LIENS, CAUSES OF ACTION, SUITS, DEMANDS, JUDGMENTS AND EXPENSES (INCLUDING, WITHOUT LIMITATION, COURT COSTS, ATTORNEYS' FEES AND COSTS OF INVESTIGATION, REMOVAL AND REMEDIATION AND GOVERNMENTAL OVERSIGHT COSTS) ENVIRONMENTAL OR OTHERWISE (COLLECTIVELY "LIABILITIES") OF ANY NATURE, KIND OR DESCRIPTION OF ANY PERSON OR ENTITY DIRECTLY OR INDIRECTLY ARISING OUT OF, RESULTING FROM OR RELATED TO (IN WHOLE OR IN PART):

(i) THIS LICENSE, INCLUDING, WITHOUT LIMITATION, ITS ENVIRONMENTAL PROVISIONS,

(ii) ANY RIGHTS OR INTERESTS GRANTED PURSUANT TO THIS LICENSE,

(iii) LICENSEE'S OCCUPATION AND USE OF THE PREMISES,

(iv) THE ENVIRONMENTAL CONDITION AND STATUS OF THE PREMISES CAUSED BY OR CONTRIBUTED BY LICENSEE, OR

(v) ANY ACT OR OMISSION OF LICENSEE OR LICENSEE'S OFFICERS, AGENTS, INVITEES, EMPLOYEES, OR CONTRACTORS, OR ANYONE DIRECTLY OR INDIRECTLY EMPLOYED BY ANY OF THEM, OR ANYONE THEY CONTROL OR EXERCISE CONTROL OVER,

EVEN IF SUCH LIABILITIES ARISE FROM OR ARE ATTRIBUTED TO, IN WHOLE OR IN PART, ANY NEGLIGENCE OF ANY INDEMNITEE. THE ONLY LIABILITIES WITH RESPECT TO WHICH LICENSEE'S OBLIGATION TO INDEMNIFY THE INDEMNITEES DOES NOT APPLY ARE LIABILITIES TO THE EXTENT PROXIMATELY CAUSED BY THE GROSS NEGLIGENCE OR WILLFUL MISCONDUCT OF AN INDEMNITEE.

(b) FURTHER, TO THE FULLEST EXTENT PERMITTED BY LAW, NOTWITHSTANDING THE LIMITATION IN SECTION 19(a), LICENSEE SHALL, AND SHALL CAUSE ITS CONTRACTOR TO, NOW AND FOREVER WAIVE ANY AND ALL CLAIMS, REGARDLESS WHETHER BASED ON THE STRICT LIABILITY, NEGLIGENCE OR OTHERWISE, THAT RAILROAD IS AN "OWNER", "OPERATOR", "ARRANGER", OR "TRANSPORTER" WITH RESPECT TO THE PIPELINE FOR THE PURPOSES OF CERCLA OR OTHER ENVIRONMENTAL LAWS. LICENSEE WILL INDEMNIFY, DEFEND AND HOLD THE INDEMNITEES HARMLESS FROM ANY AND ALL SUCH CLAIMS REGARDLESS OF THE NEGLIGENCE OF THE INDEMNITEES. LICENSEE FURTHER AGREES THAT THE USE OF THE PREMISES AS CONTEMPLATED BY THIS LICENSE SHALL NOT IN ANY WAY SUBJECT LICENSOR TO CLAIMS THAT LICENSOR IS OTHER THAN A COMMON CARRIER FOR PURPOSES OF ENVIRONMENTAL LAWS AND EXPRESSLY AGREES TO INDEMNIFY, DEFEND, AND HOLD THE INDEMNITEES HARMLESS FOR ANY AND ALL SUCH CLAIMS. IN NO EVENT SHALL LICENSOR BE RESPONSIBLE FOR THE ENVIRONMENTAL CONDITION OF THE PREMISES.

(c) TO THE FULLEST EXTENT PERMITTED BY LAW, LICENSEE FURTHER AGREES,AND SHALL CAUSE ITS CONTRACTOR TO AGREE, REGARDLESS OF ANY NEGLIGENCE OR ALLEGED NEGLIGENCE OF ANY INDEMNITEE, TO INDEMNIFY, AND HOLD HARMLESS THE INDEMNITEES AGAINST AND ASSUME THE DEFENSE OF ANY LIABILITIES ASSERTED AGAINST OR SUFFERED BY ANY INDEMNITEE UNDER OR RELATED TO THE FEDERAL EMPLOYERS' LIABILITY ACT ("FELA") WHENEVER EMPLOYEES OF LICENSEE OR ANY OF ITS AGENTS, INVITEES, OR CONTRACTORS CLAIM OR ALLEGE THAT THEY ARE EMPLOYEES OF ANY INDEMNITEE OR OTHERWISE. THIS INDEMNITY SHALL ALSO EXTEND, ON THE SAME BASIS, TO FELA CLAIMS BASED ON ACTUAL OR ALLEGED VIOLATIONS OF ANY FEDERAL, STATE OR LOCAL LAWS OR REGULATIONS, INCLUDING BUT NOT LIMITED TO THE SAFETY APPLIANCE ACT, THE BOILER

INSPECTION ACT, THE OCCUPATIONAL HEALTH AND SAFETY ACT, THE RESOURCE CONSERVATION AND RECOVERY ACT, AND ANY SIMILAR STATE OR FEDERAL STATUTE.

(d) Upon written notice from Licensor, Licensee agrees to assume the defense of any lawsuit or other proceeding brought against any Indemnitee by any entity, relating to any matter covered by this License for which Licensee has an obligation to assume liability for and/or save and hold harmless any Indemnitee. Licensee shall pay all costs incident to such defense, including, but not limited to, attorneys' fees, investigators' fees, litigation and appeal expenses, settlement payments, and amounts paid in satisfaction of judgments.

PERSONAL PROPERTY WAIVER

20. ALL PERSONAL PROPERTY, INCLUDING, BUT NOT LIMITED TO, FIXTURES, EQUIPMENT, OR RELATED MATERIALS UPON THE PREMISES WILL BE AT THE RISK OF LICENSEE ONLY, AND NO INDEMNITEE WILL BE LIABLE FOR ANY DAMAGE THERETO OR THEFT THEREOF, WHETHER OR NOT DUE IN WHOLE OR IN PART TO THE NEGLIGENCE OF ANY INDEMNITEE.

INSURANCE

21. Licensee shall, at its sole cost and expense, procure and maintain during the life of this Agreement the following insurance coverage:

A. **Commercial General Liability Insurance.** This insurance shall contain broad form contractual liability with a combined single limit of a minimum of $5,000,000 each occurrence and an aggregate limit of at least $10,000,000. Coverage must be purchased on a post 1998 ISO occurrence or equivalent and include coverage for, but not limited to, the following:

- Bodily Injury and Property Damage
- Personal Injury and Advertising Injury
- Fire legal liability
- Products and completed operations

This policy shall also contain the following endorsements, which shall be indicated on the certificate of insurance:

- The employee and workers compensation related exclusions in the above policy shall not apply with respect to claims related to railroad employees.
- The definition of insured contract shall be amended to remove any exclusion or other limitation for any work being done within 50 feet of railroad property.
- Any exclusions related to the explosion, collapse and underground hazards shall be removed.

No other endorsements limiting coverage may be included on the policy.

B. **Business Automobile Insurance.** This insurance shall contain a combined single limit of at least $1,000,000 per occurrence, and include coverage for, but not limited to the following:
- Bodily injury and property damage
- Any and all vehicles owned, used or hired

C. **Workers Compensation and Employers Liability Insurance.** This insurance shall include coverage for, but not limited to:
- Licensee's statutory liability under the worker's compensation laws of the state(s) in which the work is to be performed. If optional under State law, the insurance must cover all employees anyway.
- Employers' Liability (Part B) with limits of at least $500,000 each accident, $500,000 by disease policy limit, $500,000 by disease each employee.

D. **Railroad Protective Liability Insurance.** This insurance shall name only the Licensor as the Insured with coverage of at least $5,000,000 per occurrence and $10,000,000 in the aggregate. The coverage obtained under this policy shall only be effective during the initial installation and/or construction of the PIPELINE. **THE CONSTRUCTION OF THE PIPELINE SHALL BE COMPLETED WITHIN ONE (1) YEAR OF THE EFFECTIVE DATE.** If further maintenance of the PIPELINE is needed at a later date, an additional Railroad Protective Liability Insurance Policy shall be required. The policy shall be issued on a standard ISO form CG 00 35 10 93 and include the following:
- Endorsed to include the Pollution Exclusion Amendment (ISO form CG 28 31 10 93)
- Endorsed to include the Limited Seepage and Pollution Endorsement.
- Endorsed to include Evacuation Expense Coverage Endorsement.
- No other endorsements restricting coverage may be added.
- The original policy must be provided to the Licensor prior to performing any work or services under this Agreement.

In lieu of providing a Railroad Protective Liability Policy, Licensee may participate in Licensor's Blanket Railroad Protective Liability Insurance Policy available to Licensee or its contractor. The limits of coverage are the same as above. The cost is $1000.

☒ I **elect** to participate in Licensor's Blanket Policy;

☐ I **elect not** to participate in Licensor's Blanket Policy.

Other Requirements:

Where allowable by law, all policies (applying to coverage listed above) shall contain no exclusion for punitive damages and certificates of insurance shall reflect that no exclusion exists.

Licensee agrees to waive its right of recovery against Licensor for all claims and suits against Licensor. In addition, its insurers, through policy endorsement, waive their right of subrogation against Licensor for all claims and suits. The certificate of insurance must reflect waiver of subrogation endorsement. Licensee further waives

its right of recovery, and its insurers also waive their right of subrogation against Licensor for loss of its owned or leased property or property under its care, custody, or control.

Licensee's insurance policies through policy endorsement must include wording which states that the policy shall be primary and non-contributing with respect to any insurance carried by Licensor. The certificate of insurance must reflect that the above wording is included in evidenced policies.

All policy(ies) required above (excluding Workers Compensation, Contractor's Pollution Legal Liability and if applicable, Railroad Protective) shall include a severability of interest endorsement and shall name Licensor and Staubach Global Services - RR, Inc. as an additional insured with respect to work performed under this agreement. Severability of interest and naming Licensor and Staubach Global Services - RR, Inc. as additional insureds shall be indicated on the certificate of insurance.

Licensee is not allowed to self-insure without the prior written consent of Licensor. If granted by Licensor, any deductible, self-insured retention or other financial responsibility for claims shall be covered directly by Licensee in lieu of insurance. Any and all Licensor liabilities that would otherwise, in accordance with the provisions of this Agreement, be covered by Licensee's insurance will be covered as if Licensee elected not to include a deductible, self-insured retention, or other financial responsibility for claims.

Prior to commencing the Work, Licensee shall furnish to Licensor an acceptable certificate(s) of insurance including an original signature of the authorized representative evidencing the required coverage, endorsements, and amendments. The policy(ies) shall contain a provision that obligates the insurance company(ies) issuing such policy(ies) to notify Licensor in writing at least 30 days prior to any cancellation, non-renewal, substitution or material alteration. This cancellation provision shall be indicated on the certificate of insurance. In the event of a claim or lawsuit involving Railroad arising out of this agreement, Licensee will make available any required policy covering such claim or lawsuit.

Any insurance policy shall be written by a reputable insurance company acceptable to Licensor or with a current Best's Guide Rating of A- and Class VII or better, and authorized to do business in the state(s) in which the service is to be provided.

Licensee represents that this License has been thoroughly reviewed by Licensee's insurance agent(s)/broker(s), who have been instructed by Licensee to procure the insurance coverage required by this Agreement. Allocated Loss Expense shall be in addition to all policy limits for coverages referenced above.

Not more frequently than once every five years, Licensor may reasonably modify the required insurance coverage to reflect then-current risk management practices in the railroad industry and underwriting practices in the insurance industry.

If any portion of the operation is to be subcontracted by Licensee, Licensee shall require that the subcontractor shall provide and maintain insurance coverages as set forth herein, naming Licensor as an additional insured, and shall require that the

subcontractor shall release, defend and indemnify Licensor to the same extent and under the same terms and conditions as Licensee is required to release, defend and indemnify Licensor herein.

Failure to provide evidence as required by this section shall entitle, but not require, Licensor to terminate this License immediately. Acceptance of a certificate that does not comply with this section shall not operate as a waiver of Licensee's obligations hereunder.

The fact that insurance (including, without limitation, self-insurance) is obtained by Licensee shall not be deemed to release or diminish the liability of Licensee including, without limitation, liability under the indemnity provisions of this License. Damages recoverable by Licensor shall not be limited by the amount of the required insurance coverage.

For purposes of this section, Licensor shall mean "Burlington Northern Santa Fe Corporation", "BNSF Railway Company" and the subsidiaries, successors, assigns and affiliates of each.

ENVIRONMENTAL

22. (a) Licensee shall strictly comply with all federal, state and local environmental laws and regulations in its use of the Premises, including, but not limited to, the Resource Conservation and Recovery Act, as amended (RCRA), the Clean Water Act, the Oil Pollution Act, the Hazardous Materials Transportation Act, CERCLA (collectively referred to as the "Environmental Laws"). Licensee shall not maintain a treatment, storage, transfer or disposal facility, or underground storage tank, as defined by Environmental Laws on the Premises. Licensee shall not release or suffer the release of oil or hazardous substances, as defined by Environmental Laws on or about the Premises.

(b) Licensee shall give Licensor immediate notice to Licensor's Resource Operations Center at (800) 832-5452 of any release of hazardous substances on or from the Premises, violation of Environmental Laws, or inspection or inquiry by governmental authorities charged with enforcing Environmental Laws with respect to Licensee's use of the Premises. Licensee shall use the best efforts to promptly respond to any release on or from the Premises. Licensee also shall give Licensor immediate notice of all measures undertaken on behalf of Licensee to investigate, remediate, respond to or otherwise cure such release or violation.

(c) In the event that Licensor has notice from Licensee or otherwise of a release or violation of Environmental Laws arising in any way with respect to the PIPELINE which occurred or may occur during the term of this License, Licensor may require Licensee, at Licensee's sole risk and expense, to take timely measures to investigate, remediate, respond to or otherwise cure such release or violation affecting the Premises or Licensor's right-of-way.

(d) Licensee shall promptly report to Licensor in writing any conditions or activities upon the Premises known to Licensee which create a risk of harm to persons, property or the environment and shall take whatever action is necessary to

prevent injury to persons or property arising out of such conditions or activities; provided, however, that Licensee's reporting to Licensor shall not relieve Licensee of any obligation whatsoever imposed on it by this License. Licensee shall promptly respond to Licensor's request for information regarding said conditions or activities.

ALTERATIONS

23. Licensee may not make any alterations to the Premises or permanently affix anything to the Premises or any buildings or other structures adjacent to the Premises without Licensor's prior written consent.

NO WARRANTIES

24. **LICENSOR'S DUTIES AND WARRANTIES ARE LIMITED TO THOSE EXPRESSLY STATED IN THIS LICENSE AND SHALL NOT INCLUDE ANY IMPLIED DUTIES OR IMPLIED WARRANTIES, NOW OR IN THE FUTURE. NO REPRESENTATIONS OR WARRANTIES HAVE BEEN MADE BY LICENSOR OTHER THAN THOSE CONTAINED IN THIS LICENSE. LICENSEE HEREBY WAIVES ANY AND ALL WARRANTIES, EXPRESS OR IMPLIED, WITH RESPECT TO THE PREMISES OR WHICH MAY EXIST BY OPERATION OF LAW OR IN EQUITY, INCLUDING, WITHOUT LIMITATION, ANY WARRANTY OF MERCHANTABILITY, HABITABILITY OR FITNESS FOR A PARTICULAR PURPOSE.**

QUIET ENJOYMENT

25. **LICENSOR DOES NOT WARRANT ITS TITLE TO THE PROPERTY NOR UNDERTAKE TO DEFEND LICENSEE IN THE PEACEABLE POSSESSION OR USE THEREOF. NO COVENANT OF QUIET ENJOYMENT IS MADE.**

DEFAULT

26. If default shall be made in any of the covenants or agreements of Licensee contained in this document, or in case of any assignment or transfer of this License by operation of law, Licensor may, at its option, terminate this License by serving five (5) days' notice in writing upon Licensee. Any waiver by Licensor of any default or defaults shall not constitute a waiver of the right to terminate this License for any subsequent default or defaults, nor shall any such waiver in any way affect Licensor's ability to enforce any Section of this License. The remedy set forth in this Section 26 shall be in addition to, and not in limitation of, any other remedies that Licensor may have at law or in equity.

LIENS AND CHARGES

27. Licensee shall promptly pay and discharge any and all liens arising out of any construction, alterations or repairs done, suffered or permitted to be done by Licensee on Premises. Licensor is hereby authorized to post any notices or take any other action upon or with respect to Premises that is or may be permitted by law to prevent the attachment of any such liens to Premises; provided, however, that failure of Licensor to take any such action shall not relieve Licensee of any obligation or

liability under this Section 27 or any other Section of this License. Licensee shall pay when due any taxes, assessments or other charges (collectively, "Taxes") levied or assessed upon the Improvements by any governmental or quasi-governmental body or any Taxes levied or assessed against Licensor or the Premises that are attributable to the Improvements.

TERMINATION

28. This License may be terminated by Licensor, at any time, by serving thirty (30) days' written notice of termination upon Licensee. This License may be terminated by Licensee upon execution of Licensor's Mutual Termination Letter Agreement then in effect. Upon expiration of the time specified in such notice, this License and all rights of Licensee shall absolutely cease.

29. If Licensee fails to surrender to Licensor the Premises, upon any termination of this License, all liabilities and obligations of Licensee hereunder shall continue in effect until the Premises are surrendered. Termination shall not release Licensee from any liability or obligation, whether of indemnity or otherwise, resulting from any events happening prior to the date of termination.

ASSIGNMENT

30. Neither Licensee, nor the heirs, legal representatives, successors, or assigns of Licensee, nor any subsequent assignee, shall assign or transfer this License or any interest herein, without the prior written consent and approval of Licensor, which may be withheld in Licensor's sole discretion.

NOTICES

31. Any notice required or permitted to be given hereunder by one party to the other shall be in writing and the same shall be given and shall be deemed to have been served and given if (i) placed in the United States mail, certified, return receipt requested, or (ii) deposited into the custody of a nationally recognized overnight delivery service, addressed to the party to be notified at the address for such party specified below, or to such other address as the party to be notified may designate by giving the other party no less than thirty (30) days' advance written notice of such change in address.

If to Licensor:	Staubach Global Services - RR, Inc. 3017 Lou Menk Drive, Suite 100 Fort Worth, TX 76131-2800 Attn: Licenses/Permits
with a copy to:	BNSF Railway Company 2500 Lou Menk Dr. – AOB3 Fort Worth, TX 76131 Attn: Manager – Land Revenue Management
If to Licensee:	City of Torrance 3031 Torrance Blvd Torrance, California 90503 Attn: City Clerk

with a copy to: City of Torrance
20500 Madrona Ave
Torrance, California 90503
Attn: Public Works Department

SURVIVAL

32. Neither termination nor expiration will release either party from any liability or obligation under this License, whether of indemnity or otherwise, resulting from any acts, omissions or events happening prior to the date of termination or expiration, or, if later, the date when the PIPELINE and improvements are removed and the Premises are restored to its condition as of the Effective Date.

RECORDATION

33. It is understood and agreed that this License shall not be placed on public record.

APPLICABLE LAW

34. All questions concerning the interpretation or application of provisions of this License shall be decided according to the substantive laws of the State of Texas without regard to conflicts of law provisions.

SEVERABILITY

35. To the maximum extent possible, each provision of this License shall be interpreted in such manner as to be effective and valid under applicable law, but if any provision of this License shall be prohibited by, or held to be invalid under, applicable law, such provision shall be ineffective solely to the extent of such prohibition or invalidity, and this shall not invalidate the remainder of such provision or any other provision of this License.

INTEGRATION

36. This License is the full and complete agreement between Licensor and Licensee with respect to all matters relating to Licensee's use of the Premises, and supersedes any and all other agreements between the parties hereto relating to Licensee's use of the Premises as described herein. However, nothing herein is intended to terminate any surviving obligation of Licensee or Licensee's obligation to defend and hold Licensor harmless in any prior written agreement between the parties.

MISCELLANEOUS

37. In the event that Licensee consists of two or more parties, all the covenants and agreements of Licensee herein contained shall be the joint and several covenants and agreements of such parties.

38. The waiver by Licensor of the breach of any provision herein by Licensee shall in no way impair the right of Licensor to enforce that provision for any subsequent breach thereof.

Staubach Global Services – RR, Inc. is acting as representative for BNSF Railway Company.

IN WITNESS WHEREOF, this License has been duly executed, in duplicate, by the parties hereto as of the day and year first above written.

BNSF RAILWAY COMPANY
P. O. Box 961050
Fort Worth, Texas 76161-0050

By: Dalen E. Wintermute
Dalen E. Wintermute
Title: Manager – Land Revenue Management

CITY OF TORRANCE
A Municipal Corporation
c/o City Clerk
3031 Torrance Blvd
Torrance, California 90503

APPROVED AS TO FORM:
JOHN L. FELLOWS III
City Attorney

By: [signature]
Title: Deputy City Attorney

By: Frank Scotto
Frank Scotto
Title: Mayor

ATTEST:

By: Sue Herbers
Sue Herbers, City Clerk
DATED: 03-26-2009

TRACKING NO. 09-37571

EXHIBIT "A"

ATTACHED TO CONTRACT BETWEEN

BNSF RAILWAY COMPANY

AND

CITY OF TORRANCE

SCALE: 1 IN. = 100 FT.
CALIFORNIA DIV.
HARBOR SUBDIV. L.S. 7604
DATE 02/02/2009

AT&SF RY
CA-28
02

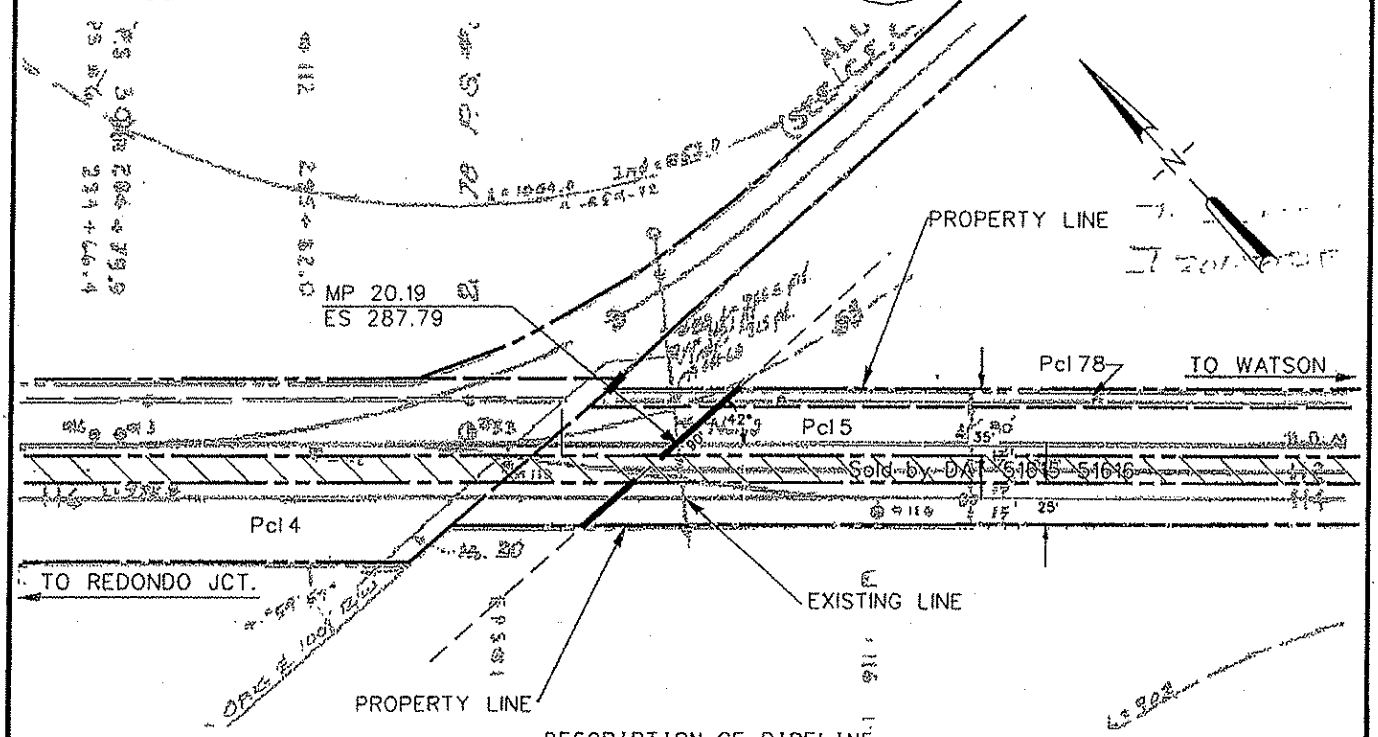

DESCRIPTION OF PIPELINE
PIPELINE SHOWN BOLD

	CARRIER PIPE	CASING PIPE		CARRIER PIPE	CASING PIPE
SIZE:	24"	36"	LENGTH ON R/W:	90'	90'
CONTENTS:	POTABLE WATER		WORKING PRESSURE:	80 PSI	
PIPE MATERIAL:	DIP	STEEL	BURY: BASE/RAIL TO TOP OF CASING		6.25'
SPECIFICATION / GRADE:	C-151	A-53	BURY: NATURAL GROUND		6'
WALL THICKNESS:	.430"	.563"	BURY: ROADWAY DITCHES		6'
COATING:	N/A	N/A	CATHODIC PROTECTION		N/A

VENTS: NUMBER N/A SIZE - HEIGHT OF VENT ABOVE GROUND -

NOTE: CASING TO BE JACKED OR DRY BORED ONLY

AT TORRANCE
COUNTY OF LOS ANGELES STATE OF CA

AFV

MAP REF. 509579

DRAWING NO. 1-45682

PIPELINE LICENSE

THIS LICENSE ("License"), made as of the 28th day of April, 2009 ("Effective Date") by and between **BNSF RAILWAY COMPANY**, a Delaware corporation ("Licensor") and **CITY OF TORRANCE** ("Licensee").

NOW THEREFORE, in consideration of the mutual covenants contained herein, the parties agree to the following:

GENERAL

1. Licensor hereby grants Licensee a non-exclusive license, subject to all rights, interests, and estates of third parties, including, without limitation, any leases, use rights, easements, liens, or other encumbrances, and upon the terms and conditions set forth below, to construct and maintain, in strict accordance with the drawings and specifications approved by Licensor as part of Licensee's application process (the "Drawings and Specifications"), one (1) Pipeline(s), Ten (10") inches in diameter inside a Twenty-Four (24") inch steel casing ("PIPELINE"), across or along the rail corridor of Licensor at or near the station of Torrance, County of Los Angeles, State of California, Line Segment 7604, Mile Post 20.19, as shown on the attached Drawing No. 1-45681, dated February 2, 2009, attached hereto as Exhibit "A" and made a part hereof ("Premises").

2. Licensee shall not disturb any improvements of Licensor or Licensor's existing lessees, Licensees, easement beneficiaries or lien holders, if any, or interfere with the use of such improvements.

3. Licensee shall use the Premises solely for construction and maintenance of a PIPELINE in accordance with the Drawings and Specifications carrying sewage. Licensee shall not use the PIPELINE to carry any other commodity or use the Premises for any other purpose.

   Licensee covenants that it will not handle or transport "hazardous waste" or "hazardous substances", as "hazardous waste" and "hazardous substances" may now or in the future be defined by any federal, state, or local governmental agency or body through the PIPELINE on Licensor's property. Licensee agrees periodically to furnish Licensor with proof, satisfactory to Licensor that Licensee is in such compliance. Should Licensee not comply fully with the above-stated obligations of this Section, notwithstanding anything contained in any other provision hereof, Licensor may, at its option, terminate this License by serving five (5) days' notice of termination upon Licensee. Upon termination, Licensee shall remove the PIPELINE and restore Licensor's property as herein elsewhere provided.

4. In case of the eviction of Licensee by anyone owning or claiming title to or any interest in the Premises, or by the abandonment by Licensor of the affected rail corridor, Licensor shall not be liable to refund Licensee any compensation paid hereunder, except for the pro-rata part of any recurring charge paid in advance, or for any damage Licensee sustains in connection therewith.

5. Any contractors or subcontractors performing work on the PIPELINE or entering the Premises on behalf of Licensee shall be deemed servants and agents of Licensee for purposes of this License.

TERM

6. This License shall commence on the Effective Date and shall continue for a period of twenty-five (25) years, subject to prior termination as hereinafter described.

COMPENSATION

7. (a) Licensee shall pay Licensor, prior to the Effective Date, the sum of Two Thousand Five Hundred and No/100 Dollars ($2500) as compensation for the use of the Premises.

(b) Licensee agrees to reimburse Licensor (within thirty (30) days after receipt of bills therefor) for all costs and expenses incurred by Licensor in connection with Licensee's use of the Premises or the presence, construction and maintenance of the PIPELINE, including but not limited to the furnishing of Licensor's Flagman and any vehicle rental costs incurred. The cost of flagger services provided by the Railway, when deemed necessary by the Railway's representative, will be borne by the Licensee. The estimated cost for one (1) flagger is $800.00 for an eight (8) hour basic day with time and one-half or double time for overtime, rest days and holidays. The estimated cost for each flagger includes vacation allowance, paid holidays, Railway and unemployment insurance, public liability and property damage insurance, health and welfare benefits, transportation, meals, lodging and supervision. Negotiations for Railway labor or collective bargaining agreements and rate changes authorized by appropriate Federal authorities may increase actual or estimated flagging rates. The flagging rate in effect at the time of performance by the Contractor hereunder will be used to calculate the actual costs of flagging pursuant to this paragraph.

(c) All invoices are due thirty (30) days after the date of invoice. In the event that Licensee shall fail to pay any monies due to Licensor within thirty (30) days after the invoice date, then Licensee shall pay interest on such unpaid sum from thirty (30) days after its invoice date to the date of payment by Licensee at an annual rate equal to (i) the greater of (a) for the period January 1 through June 30, the prime rate last published in *The Wall Street Journal* in the preceding December plus two and one-half percent (2 1/2%), and for the period July 1 through December 31, the prime rate last published in *The Wall Street Journal* in the preceding June plus two and one-half percent (2 1/2%), or (b) twelve percent (12%), or (ii) the maximum rate permitted by law, whichever is less.

COMPLIANCE WITH LAWS

8. (a) Licensee shall observe and comply with any and all laws, statutes, regulations, ordinances, orders, covenants, restrictions, or decisions of any court of competent jurisdiction ("Legal Requirements") relating to the construction, maintenance, and use of the PIPELINE and the use of the Premises.

(b) Prior to entering the Premises, Licensee shall and shall cause its contractor to comply with all Licensor's applicable safety rules and regulations. Prior to commencing any work on the Premises, Licensee shall complete and shall require

its contractor to complete the safety-training program at the following Internet Website "http://www.contractororientation.com". This training must be completed no more than one year in advance of Licensee's entry on the Premises.

DEFINITION OF COST AND EXPENSE

9. For the purpose of this License, "cost' or "costs" "expense" or "expenses" includes, but is not limited to, actual labor and material costs including all assignable additives, and material and supply costs at current value where used.

RIGHT OF LICENSOR TO USE

10. Licensor excepts and reserves the right, to be exercised by Licensor and any other parties who may obtain written permission or authority from Licensor:

    (a) to maintain, renew, use, operate, change, modify and relocate any existing pipe, power, communication lines and appurtenances and other facilities or structures of like character upon, over, under or across the Premises;

    (b) to construct, maintain, renew, use, operate, change, modify and relocate any tracks or additional facilities or structures upon, over, under or across the Premises; or

    (c) to use the Premises in any manner as the Licensor in its sole discretion deems appropriate, provided Licensor uses all commercially reasonable efforts to avoid material interference with the use of the Premises by Licensee for the purpose specified in Section 3 above.

LICENSEE'S OPERATIONS

11. (a) Licensee shall notify Licensor's Roadmaster at 7427 Rosemead Blvd., Pico Rivera, CA 90660, telephone (323) 307-5815(Office) or (323) 864-3852 (Cell), at least five (5) business days prior to installation of the PIPELINE and prior to entering the Premises for any subsequent maintenance thereon.

    (b) In performing the work described in Section 3, Licensee shall use only public roadways to cross from one side of Licensor's tracks to the other.

12. (a) Under no conditions shall Licensee be permitted to conduct any tests, investigations or any other activity using mechanized equipment and/or machinery, or place or store any mechanized equipment, tools or other materials, within twenty-five (25) feet of the centerline of any railroad track on the Premises unless Licensee has obtained prior written approval from Licensor. Licensee shall, at its sole cost and expense, perform all activities on and about the Premises in such a manner as not at any time to be a source of danger to or interference with the existence or use of present or future tracks, roadbed or property of Licensor, or the safe operation and activities of Licensor. If ordered to cease using the Premises at any time by Licensor's personnel due to any hazardous condition, Licensee shall immediately do so. Notwithstanding the foregoing right of Licensor, the parties agree that Licensor has no duty or obligation to monitor Licensee's use of the Premises to determine the safe nature thereof, it being solely Licensee's responsibility to ensure that

Licensee's use of the Premises is safe. Neither the exercise nor the failure by Licensor to exercise any rights granted in this Section will alter the liability allocation provided by this License.

(b) Licensee shall, at its sole cost and expense, construct and maintain the PIPELINE in such a manner and of such material that it will not at any time be a source of danger to or interference with the existence or use of present or future tracks, roadbed or property of Licensor, or the safe operation and activities of Licensor. Licensor may direct one of its field engineers to observe or inspect the construction and/or maintenance of the PIPELINE at any time for compliance with the Drawings and Specifications. If ordered at any time to halt construction or maintenance of the PIPELINE by Licensor's personnel due to non-compliance with the same or any other hazardous condition, Licensee shall immediately do so. Notwithstanding the foregoing right of Licensor, the parties agree that Licensor has no duty or obligation to observe or inspect, or to halt work on, the PIPELINE, it being solely Licensee's responsibility to ensure that the PIPELINE is constructed in strict accordance with the Drawings and Specifications and in a safe and workmanlike manner in compliance with all terms hereof. Neither the exercise nor the failure by Licensor to exercise any right granted by this Section will alter in any way the liability allocation provided by this License. If at any time Licensee shall, in the sole judgment of Licensor, fail to properly perform its obligations under this Section, Licensor may, at its option and at Licensee's sole expense, arrange for the performance of such work as it deems necessary for the safety of its operations and activities. Licensee shall promptly reimburse Licensor for all costs and expenses of such work, upon receipt of an invoice for the same. Licensor's failure to perform any obligations of Licensee shall not alter the liability allocation hereunder.

13. During the construction and any subsequent maintenance performed on the PIPELINE, Licensee shall perform such work in a manner to preclude damage to the property of Licensor, and preclude interference with the operation of its railroad. The construction of the PIPELINE shall be completed within one (1) year of the Effective Date. Upon completion of the construction of the PIPELINE and after performing any subsequent maintenance thereon, Licensee shall, at Licensee's own cost and expense, restore Licensor's Premises to their former state as of the Effective Date of this License.

14. If at any time during the term of this License, Licensor shall desire the use of its rail corridor in such a manner as would, in Licensor's reasonable opinion, be interfered with by the PIPELINE, Licensee shall, at its sole expense, within thirty (30) days after receiving written notice from Licensor to such effect, make such changes in the PIPELINE as in the sole discretion of Licensor may be necessary to avoid interference with the proposed use of Licensor's rail corridor, including, without limitation, the relocation of the existing or the construction of a new PIPELINE(s).

15. (a) Prior to Licensee conducting any boring work on or about any portion of the Premises, Licensee shall explore the proposed location for such work with hand tools to a depth of at least three (3) feet below the surface of the ground to determine whether pipelines or other structures exist below the surface, provided, however, that in lieu of the foregoing, the Licensee shall have the right to use suitable detection equipment or other generally accepted industry practice (e.g., consulting with the Underground Services Association) to determine the existence or location of pipelines and other subsurface structures prior to drilling or excavating

with mechanized equipment. Upon Licensee's written request, which shall be made thirty (30) business days in advance of Licensee's requested construction of the PIPELINE, Licensor will provide Licensee any information that Licensor has in the possession of its Engineering Department concerning the existence and approximate location of Licensor's underground utilities and pipelines at or near the vicinity of the proposed PIPELINE. Prior to conducting any such boring work, the Licensee will review all such material. Licensor does not warrant the accuracy or completeness of information relating to subsurface conditions and Licensee's operations will be subject at all times to the liability provisions herein.

(b) For all bores greater than 26-inch diameter and at a depth less than 10.0 feet below bottom of rail, a soil investigation will need to be performed by the Licensee and reviewed by Licensor prior to construction. This study is to determine if granular material is present, and to prevent subsidence during the installation process. If the investigation determines in Licensor's reasonable opinion that granular material is present, Licensor may select a new location for Licensee's use, or may require Licensee to furnish for Licensor's review and approval, in its sole discretion a remedial plan to deal with the granular material. Once Licensor has approved any such remedial plan in writing, Licensee shall, at its sole cost and expense, carry out the approved plan in accordance with all terms thereof and hereof.

16. Any open hole, boring or well constructed on the Premises by Licensee shall be safely covered and secured at all times when Licensee is not working in the actual vicinity thereof. Following completion of that portion of the work, all holes or borings constructed on the Premises by Licensee shall be:

(a) filled in to surrounding ground level with compacted bentonite grout; or

(b) otherwise secured or retired in accordance with any applicable Legal Requirement. No excavated materials may remain on Licensor's property for more than ten (10) days, but must be properly disposed of by Licensee in accordance with applicable Legal Requirements.

17. Upon termination of this License, Licensee shall, at its sole cost and expense:

(a) remove the PIPELINE and all appurtenances thereto, or, at the sole discretion of the Licensor, fill and cap or otherwise appropriately decommission the PIPELINE with a method satisfactory to Licensor;

(b) report and restore any damage to the Premises arising from, growing out of, or connected with Licensee's use of the Premises;

(c) remedy any unsafe conditions on the Premises created or aggravated by Licensee; and

(d) leave the Premises in the condition which existed as of the Effective Date of this License.

18. Licensee's on-site supervisions shall retain/maintain a fully executed copy of this License at all times while on the Premises.

LIABILITY

19. (a) TO THE FULLEST EXTENT PERMITTED BY LAW, LICENSEE SHALL, AND SHALL CAUSE ITS CONTRACTOR TO, RELEASE, INDEMNIFY, DEFEND AND HOLD HARMLESS LICENSOR AND LICENSOR'S AFFILIATED COMPANIES, PARTNERS, SUCCESSORS, ASSIGNS, LEGAL REPRESENTATIVES, OFFICERS, DIRECTORS, SHAREHOLDERS, EMPLOYEES AND AGENTS (COLLECTIVELY, "INDEMNITEES") FOR, FROM AND AGAINST ANY AND ALL CLAIMS, LIABILITIES, FINES, PENALTIES, COSTS, DAMAGES, LOSSES, LIENS, CAUSES OF ACTION, SUITS, DEMANDS, JUDGMENTS AND EXPENSES (INCLUDING, WITHOUT LIMITATION, COURT COSTS, ATTORNEYS' FEES AND COSTS OF INVESTIGATION, REMOVAL AND REMEDIATION AND GOVERNMENTAL OVERSIGHT COSTS) ENVIRONMENTAL OR OTHERWISE (COLLECTIVELY "LIABILITIES") OF ANY NATURE, KIND OR DESCRIPTION OF ANY PERSON OR ENTITY DIRECTLY OR INDIRECTLY ARISING OUT OF, RESULTING FROM OR RELATED TO (IN WHOLE OR IN PART):

(i) THIS LICENSE, INCLUDING, WITHOUT LIMITATION, ITS ENVIRONMENTAL PROVISIONS,

(ii) ANY RIGHTS OR INTERESTS GRANTED PURSUANT TO THIS LICENSE,

(iii) LICENSEE'S OCCUPATION AND USE OF THE PREMISES,

(iv) THE ENVIRONMENTAL CONDITION AND STATUS OF THE PREMISES CAUSED BY OR CONTRIBUTED BY LICENSEE, OR

(v) ANY ACT OR OMISSION OF LICENSEE OR LICENSEE'S OFFICERS, AGENTS, INVITEES, EMPLOYEES, OR CONTRACTORS, OR ANYONE DIRECTLY OR INDIRECTLY EMPLOYED BY ANY OF THEM, OR ANYONE THEY CONTROL OR EXERCISE CONTROL OVER,

EVEN IF SUCH LIABILITIES ARISE FROM OR ARE ATTRIBUTED TO, IN WHOLE OR IN PART, ANY NEGLIGENCE OF ANY INDEMNITEE. THE ONLY LIABILITIES WITH RESPECT TO WHICH LICENSEE'S OBLIGATION TO INDEMNIFY THE INDEMNITEES DOES NOT APPLY ARE LIABILITIES TO THE EXTENT PROXIMATELY CAUSED BY THE GROSS NEGLIGENCE OR WILLFUL MISCONDUCT OF AN INDEMNITEE.

(b) FURTHER, TO THE FULLEST EXTENT PERMITTED BY LAW, NOTWITHSTANDING THE LIMITATION IN SECTION 19(a), LICENSEE SHALL, AND SHALL CAUSE ITS CONTRACTOR TO, NOW AND FOREVER WAIVE ANY AND ALL CLAIMS, REGARDLESS WHETHER BASED ON THE STRICT LIABILITY, NEGLIGENCE OR OTHERWISE, THAT RAILROAD IS AN "OWNER", "OPERATOR", "ARRANGER", OR "TRANSPORTER" WITH RESPECT TO THE PIPELINE FOR THE PURPOSES OF CERCLA OR OTHER ENVIRONMENTAL LAWS. LICENSEE WILL INDEMNIFY, DEFEND AND HOLD THE INDEMNITEES HARMLESS FROM ANY AND ALL SUCH CLAIMS REGARDLESS OF THE

NEGLIGENCE OF THE INDEMNITEES. LICENSEE FURTHER AGREES THAT THE USE OF THE PREMISES AS CONTEMPLATED BY THIS LICENSE SHALL NOT IN ANY WAY SUBJECT LICENSOR TO CLAIMS THAT LICENSOR IS OTHER THAN A COMMON CARRIER FOR PURPOSES OF ENVIRONMENTAL LAWS AND EXPRESSLY AGREES TO INDEMNIFY, DEFEND, AND HOLD THE INDEMNITEES HARMLESS FOR ANY AND ALL SUCH CLAIMS. IN NO EVENT SHALL LICENSOR BE RESPONSIBLE FOR THE ENVIRONMENTAL CONDITION OF THE PREMISES.

(c) **TO THE FULLEST EXTENT PERMITTED BY LAW, LICENSEE FURTHER AGREES,AND SHALL CAUSE ITS CONTRACTOR TO AGREE, REGARDLESS OF ANY NEGLIGENCE OR ALLEGED NEGLIGENCE OF ANY INDEMNITEE, TO INDEMNIFY, AND HOLD HARMLESS THE INDEMNITEES AGAINST AND ASSUME THE DEFENSE OF ANY LIABILITIES ASSERTED AGAINST OR SUFFERED BY ANY INDEMNITEE UNDER OR RELATED TO THE FEDERAL EMPLOYERS' LIABILITY ACT ("FELA") WHENEVER EMPLOYEES OF LICENSEE OR ANY OF ITS AGENTS, INVITEES, OR CONTRACTORS CLAIM OR ALLEGE THAT THEY ARE EMPLOYEES OF ANY INDEMNITEE OR OTHERWISE. THIS INDEMNITY SHALL ALSO EXTEND, ON THE SAME BASIS, TO FELA CLAIMS BASED ON ACTUAL OR ALLEGED VIOLATIONS OF ANY FEDERAL, STATE OR LOCAL LAWS OR REGULATIONS, INCLUDING BUT NOT LIMITED TO THE SAFETY APPLIANCE ACT, THE BOILER INSPECTION ACT, THE OCCUPATIONAL HEALTH AND SAFETY ACT, THE RESOURCE CONSERVATION AND RECOVERY ACT, AND ANY SIMILAR STATE OR FEDERAL STATUTE.**

(d) Upon written notice from Licensor, Licensee agrees to assume the defense of any lawsuit or other proceeding brought against any Indemnitee by any entity, relating to any matter covered by this License for which Licensee has an obligation to assume liability for and/or save and hold harmless any Indemnitee. Licensee shall pay all costs incident to such defense, including, but not limited to, attorneys' fees, investigators' fees, litigation and appeal expenses, settlement payments, and amounts paid in satisfaction of judgments.

PERSONAL PROPERTY WAIVER

20. ALL PERSONAL PROPERTY, INCLUDING, BUT NOT LIMITED TO, FIXTURES, EQUIPMENT, OR RELATED MATERIALS UPON THE PREMISES WILL BE AT THE RISK OF LICENSEE ONLY, AND NO INDEMNITEE WILL BE LIABLE FOR ANY DAMAGE THERETO OR THEFT THEREOF, WHETHER OR NOT DUE IN WHOLE OR IN PART TO THE NEGLIGENCE OF ANY INDEMNITEE.

INSURANCE

21. Licensee shall, at its sole cost and expense, procure and maintain during the life of this Agreement the following insurance coverage:

A. **Commercial General Liability Insurance.** This insurance shall contain broad form contractual liability with a combined single limit of a minimum of $5,000,000 each occurrence and an aggregate limit of at least $10,000,000. Coverage must be

purchased on a post 1998 ISO occurrence or equivalent and include coverage for, but not limited to, the following:

- Bodily Injury and Property Damage
- Personal Injury and Advertising Injury
- Fire legal liability
- Products and completed operations

This policy shall also contain the following endorsements, which shall be indicated on the certificate of insurance:

- The employee and workers compensation related exclusions in the above policy shall not apply with respect to claims related to railroad employees.
- The definition of insured contract shall be amended to remove any exclusion or other limitation for any work being done within 50 feet of railroad property.
- Any exclusions related to the explosion, collapse and underground hazards shall be removed.

No other endorsements limiting coverage may be included on the policy.

B. **Business Automobile Insurance.** This insurance shall contain a combined single limit of at least $1,000,000 per occurrence, and include coverage for, but not limited to the following:

- Bodily injury and property damage
- Any and all vehicles owned, used or hired

C. **Workers Compensation and Employers Liability Insurance.** This insurance shall include coverage for, but not limited to:

- Licensee's statutory liability under the worker's compensation laws of the state(s) in which the work is to be performed. If optional under State law, the insurance must cover all employees anyway.
- Employers' Liability (Part B) with limits of at least $500,000 each accident, $500,000 by disease policy limit, $500,000 by disease each employee.

D. **Railroad Protective Liability Insurance.** This insurance shall name only the Licensor as the Insured with coverage of at least $5,000,000 per occurrence and $10,000,000 in the aggregate. The coverage obtained under this policy shall only be effective during the initial installation and/or construction of the PIPELINE. **THE CONSTRUCTION OF THE PIPELINE SHALL BE COMPLETED WITHIN ONE (1) YEAR OF THE EFFECTIVE DATE.** If further maintenance of the PIPELINE is needed at a later date, an additional Railroad Protective Liability Insurance Policy shall be required. The policy shall be issued on a standard ISO form CG 00 35 10 93 and include the following:

- Endorsed to include the Pollution Exclusion Amendment (ISO form CG 28 31 10 93)
- Endorsed to include the Limited Seepage and Pollution Endorsement.
- Endorsed to include Evacuation Expense Coverage Endorsement.
- No other endorsements restricting coverage may be added.
- The original policy must be provided to the Licensor prior to performing any work or services under this Agreement.

In lieu of providing a Railroad Protective Liability Policy, Licensee may participate in Licensor's Blanket Railroad Protective Liability Insurance Policy available to Licensee or its contractor. The limits of coverage are the same as above. The cost is $1000.

☒ I **elect** to participate in Licensor's Blanket Policy;

☐ I **elect not** to participate in Licensor's Blanket Policy.

Other Requirements:

Where allowable by law, all policies (applying to coverage listed above) shall contain no exclusion for punitive damages and certificates of insurance shall reflect that no exclusion exists.

Licensee agrees to waive its right of recovery against Licensor for all claims and suits against Licensor. In addition, its insurers, through policy endorsement, waive their right of subrogation against Licensor for all claims and suits. The certificate of insurance must reflect waiver of subrogation endorsement. Licensee further waives its right of recovery, and its insurers also waive their right of subrogation against Licensor for loss of its owned or leased property or property under its care, custody, or control.

Licensee's insurance policies through policy endorsement must include wording which states that the policy shall be primary and non-contributing with respect to any insurance carried by Licensor. The certificate of insurance must reflect that the above wording is included in evidenced policies.

All policy(ies) required above (excluding Workers Compensation, Contractor's Pollution Legal Liability and if applicable, Railroad Protective) shall include a severability of interest endorsement and shall name Licensor and Staubach Global Services - RR, Inc. as an additional insured with respect to work performed under this agreement. Severability of interest and naming Licensor and Staubach Global Services - RR, Inc. as additional insureds shall be indicated on the certificate of insurance.

Licensee is not allowed to self-insure without the prior written consent of Licensor. If granted by Licensor, any deductible, self-insured retention or other financial responsibility for claims shall be covered directly by Licensee in lieu of insurance. Any and all Licensor liabilities that would otherwise, in accordance with the provisions of this Agreement, be covered by Licensee's insurance will be covered as if Licensee elected not to include a deductible, self-insured retention, or other financial responsibility for claims.

Prior to commencing the Work, Licensee shall furnish to Licensor an acceptable certificate(s) of insurance including an original signature of the authorized representative evidencing the required coverage, endorsements, and amendments. The policy(ies) shall contain a provision that obligates the insurance company(ies) issuing such policy(ies) to notify Licensor in writing at least 30 days prior to any cancellation, non-renewal, substitution or material alteration. This cancellation provision shall be indicated on the certificate of insurance. In the event of a claim or lawsuit involving Railroad arising out of this agreement, Licensee will make available any required policy covering such claim or lawsuit.

Any insurance policy shall be written by a reputable insurance company acceptable to Licensor or with a current Best's Guide Rating of A- and Class VII or better, and authorized to do business in the state(s) in which the service is to be provided.

Licensee represents that this License has been thoroughly reviewed by Licensee's insurance agent(s)/broker(s), who have been instructed by Licensee to procure the insurance coverage required by this Agreement. Allocated Loss Expense shall be in addition to all policy limits for coverages referenced above.

Not more frequently than once every five years, Licensor may reasonably modify the required insurance coverage to reflect then-current risk management practices in the railroad industry and underwriting practices in the insurance industry.

If any portion of the operation is to be subcontracted by Licensee, Licensee shall require that the subcontractor shall provide and maintain insurance coverages as set forth herein, naming Licensor as an additional insured, and shall require that the subcontractor shall release, defend and indemnify Licensor to the same extent and under the same terms and conditions as Licensee is required to release, defend and indemnify Licensor herein.

Failure to provide evidence as required by this section shall entitle, but not require, Licensor to terminate this License immediately. Acceptance of a certificate that does not comply with this section shall not operate as a waiver of Licensee's obligations hereunder.

The fact that insurance (including, without limitation, self-insurance) is obtained by Licensee shall not be deemed to release or diminish the liability of Licensee including, without limitation, liability under the indemnity provisions of this License. Damages recoverable by Licensor shall not be limited by the amount of the required insurance coverage.

For purposes of this section, Licensor shall mean "Burlington Northern Santa Fe Corporation", "BNSF Railway Company" and the subsidiaries, successors, assigns and affiliates of each.

ENVIRONMENTAL

22. (a) Licensee shall strictly comply with all federal, state and local environmental laws and regulations in its use of the Premises, including, but not limited to, the Resource Conservation and Recovery Act, as amended (RCRA), the Clean Water Act, the Oil Pollution Act, the Hazardous Materials Transportation Act, CERCLA (collectively referred to as the "Environmental Laws"). Licensee shall not maintain a treatment, storage, transfer or disposal facility, or underground storage tank, as defined by Environmental Laws on the Premises. Licensee shall not release or suffer the release of oil or hazardous substances, as defined by Environmental Laws on or about the Premises.

(b) Licensee shall give Licensor immediate notice to Licensor's Resource Operations Center at (800) 832-5452 of any release of hazardous substances on or from the Premises, violation of Environmental Laws, or inspection or inquiry by governmental authorities charged with enforcing Environmental Laws with respect to Licensee's use of the Premises. Licensee shall use the best efforts to promptly respond to any

release on or from the Premises. Licensee also shall give Licensor immediate notice of all measures undertaken on behalf of Licensee to investigate, remediate, respond to or otherwise cure such release or violation.

(c) In the event that Licensor has notice from Licensee or otherwise of a release or violation of Environmental Laws arising in any way with respect to the PIPELINE which occurred or may occur during the term of this License, Licensor may require Licensee, at Licensee's sole risk and expense, to take timely measures to investigate, remediate, respond to or otherwise cure such release or violation affecting the Premises or Licensor's right-of-way.

(d) Licensee shall promptly report to Licensor in writing any conditions or activities upon the Premises known to Licensee which create a risk of harm to persons, property or the environment and shall take whatever action is necessary to prevent injury to persons or property arising out of such conditions or activities; provided, however, that Licensee's reporting to Licensor shall not relieve Licensee of any obligation whatsoever imposed on it by this License. Licensee shall promptly respond to Licensor's request for information regarding said conditions or activities.

ALTERATIONS

23. Licensee may not make any alterations to the Premises or permanently affix anything to the Premises or any buildings or other structures adjacent to the Premises without Licensor's prior written consent.

NO WARRANTIES

24. **LICENSOR'S DUTIES AND WARRANTIES ARE LIMITED TO THOSE EXPRESSLY STATED IN THIS LICENSE AND SHALL NOT INCLUDE ANY IMPLIED DUTIES OR IMPLIED WARRANTIES, NOW OR IN THE FUTURE. NO REPRESENTATIONS OR WARRANTIES HAVE BEEN MADE BY LICENSOR OTHER THAN THOSE CONTAINED IN THIS LICENSE. LICENSEE HEREBY WAIVES ANY AND ALL WARRANTIES, EXPRESS OR IMPLIED, WITH RESPECT TO THE PREMISES OR WHICH MAY EXIST BY OPERATION OF LAW OR IN EQUITY, INCLUDING, WITHOUT LIMITATION, ANY WARRANTY OF MERCHANTABILITY, HABITABILITY OR FITNESS FOR A PARTICULAR PURPOSE.**

QUIET ENJOYMENT

25. **LICENSOR DOES NOT WARRANT ITS TITLE TO THE PROPERTY NOR UNDERTAKE TO DEFEND LICENSEE IN THE PEACEABLE POSSESSION OR USE THEREOF. NO COVENANT OF QUIET ENJOYMENT IS MADE.**

DEFAULT

26. If default shall be made in any of the covenants or agreements of Licensee contained in this document, or in case of any assignment or transfer of this License by operation of law, Licensor may, at its option, terminate this License by serving five (5) days' notice in writing upon Licensee. Any waiver by Licensor of any default or defaults shall not constitute a waiver of the right to terminate this License for any subsequent default or defaults, nor shall

any such waiver in any way affect Licensor's ability to enforce any Section of this License. The remedy set forth in this Section 26 shall be in addition to, and not in limitation of, any other remedies that Licensor may have at law or in equity.

LIENS AND CHARGES

27. Licensee shall promptly pay and discharge any and all liens arising out of any construction, alterations or repairs done, suffered or permitted to be done by Licensee on Premises. Licensor is hereby authorized to post any notices or take any other action upon or with respect to Premises that is or may be permitted by law to prevent the attachment of any such liens to Premises; provided, however, that failure of Licensor to take any such action shall not relieve Licensee of any obligation or liability under this Section 27 or any other Section of this License. Licensee shall pay when due any taxes, assessments or other charges (collectively, "Taxes") levied or assessed upon the Improvements by any governmental or quasi-governmental body or any Taxes levied or assessed against Licensor or the Premises that are attributable to the Improvements.

TERMINATION

28. This License may be terminated by Licensor, at any time, by serving thirty (30) days' written notice of termination upon Licensee. This License may be terminated by Licensee upon execution of Licensor's Mutual Termination Letter Agreement then in effect. Upon expiration of the time specified in such notice, this License and all rights of Licensee shall absolutely cease.

29. If Licensee fails to surrender to Licensor the Premises, upon any termination of this License, all liabilities and obligations of Licensee hereunder shall continue in effect until the Premises are surrendered. Termination shall not release Licensee from any liability or obligation, whether of indemnity or otherwise, resulting from any events happening prior to the date of termination.

ASSIGNMENT

30. Neither Licensee, nor the heirs, legal representatives, successors, or assigns of Licensee, nor any subsequent assignee, shall assign or transfer this License or any interest herein, without the prior written consent and approval of Licensor, which may be withheld in Licensor's sole discretion.

NOTICES

31. Any notice required or permitted to be given hereunder by one party to the other shall be in writing and the same shall be given and shall be deemed to have been served and given if (i) placed in the United States mail, certified, return receipt requested, or (ii) deposited into the custody of a nationally recognized overnight delivery service, addressed to the party to be notified at the address for such party specified below, or to such other address as the party to be notified may designate by giving the other party no less than thirty (30) days' advance written notice of such change in address.

If to Licensor:	Staubach Global Services - RR, Inc. 3017 Lou Menk Drive, Suite 100 Fort Worth, TX 76131-2800 Attn: Licenses/Permits
with a copy to:	BNSF Railway Company 2500 Lou Menk Dr. – AOB3 Fort Worth, TX 76131 Attn: Manager – Land Revenue Management
If to Licensee:	City of Torrance 3031 Torrance Blvd Torrance, California 90503 Attn: City Clerk
with a copy to:	City of Torrance 20500 Madrona Ave Torrance, California 90503 Attn: Public Works Department

SURVIVAL

32. Neither termination nor expiration will release either party from any liability or obligation under this License, whether of indemnity or otherwise, resulting from any acts, omissions or events happening prior to the date of termination or expiration, or, if later, the date when the PIPELINE and improvements are removed and the Premises are restored to its condition as of the Effective Date.

RECORDATION

33. It is understood and agreed that this License shall not be placed on public record.

APPLICABLE LAW

34. All questions concerning the interpretation or application of provisions of this License shall be decided according to the substantive laws of the State of Texas without regard to conflicts of law provisions.

SEVERABILITY

35. To the maximum extent possible, each provision of this License shall be interpreted in such manner as to be effective and valid under applicable law, but if any provision of this License shall be prohibited by, or held to be invalid under, applicable law, such provision shall be ineffective solely to the extent of such prohibition or invalidity, and this shall not invalidate the remainder of such provision or any other provision of this License.

INTEGRATION

36. This License is the full and complete agreement between Licensor and Licensee with respect to all matters relating to Licensee's use of the Premises, and supersedes any and

all other agreements between the parties hereto relating to Licensee's use of the Premises as described herein. However, nothing herein is intended to terminate any surviving obligation of Licensee or Licensee's obligation to defend and hold Licensor harmless in any prior written agreement between the parties.

MISCELLANEOUS

37. In the event that Licensee consists of two or more parties, all the covenants and agreements of Licensee herein contained shall be the joint and several covenants and agreements of such parties.

38. The waiver by Licensor of the breach of any provision herein by Licensee shall in no way impair the right of Licensor to enforce that provision for any subsequent breach thereof.

Staubach Global Services – RR, Inc. is acting as representative for BNSF Railway Company.

IN WITNESS WHEREOF, this License has been duly executed, in duplicate, by the parties hereto as of the day and year first above written.

BNSF RAILWAY COMPANY
P. O. Box 961050
Fort Worth, Texas 76161-0050

By: _____
Dalen E. Wintermute
Title: Manager – Land Revenue Management

CITY OF TORRANCE
A Municipal Corporation
c/o City Clerk
3031 Torrance Blvd
Torrance, California 90503

APPROVED AS TO FORM:
JOHN L. FELLOWS III
City Attorney

By: _____
Title: Deputy City Attorney

By: _____
Frank Scotto
Title: Mayor

ATTEST: 03-26-2009

By: _____
Sue Herbers, City Clerk

DATED: 03-26-2009

TRACKING NO. 09-37572

EXHIBIT "A"

ATTACHED TO CONTRACT BETWEEN

BNSF RAILWAY COMPANY

AND

CITY OF TORRANCE, CA

MAP REF. 509579

SCALE: 1 IN. = 100 FT.
CALIFORNIA DIV.
HARBOR SUBDIV. L.S. 7604
DATE 02/02/2009

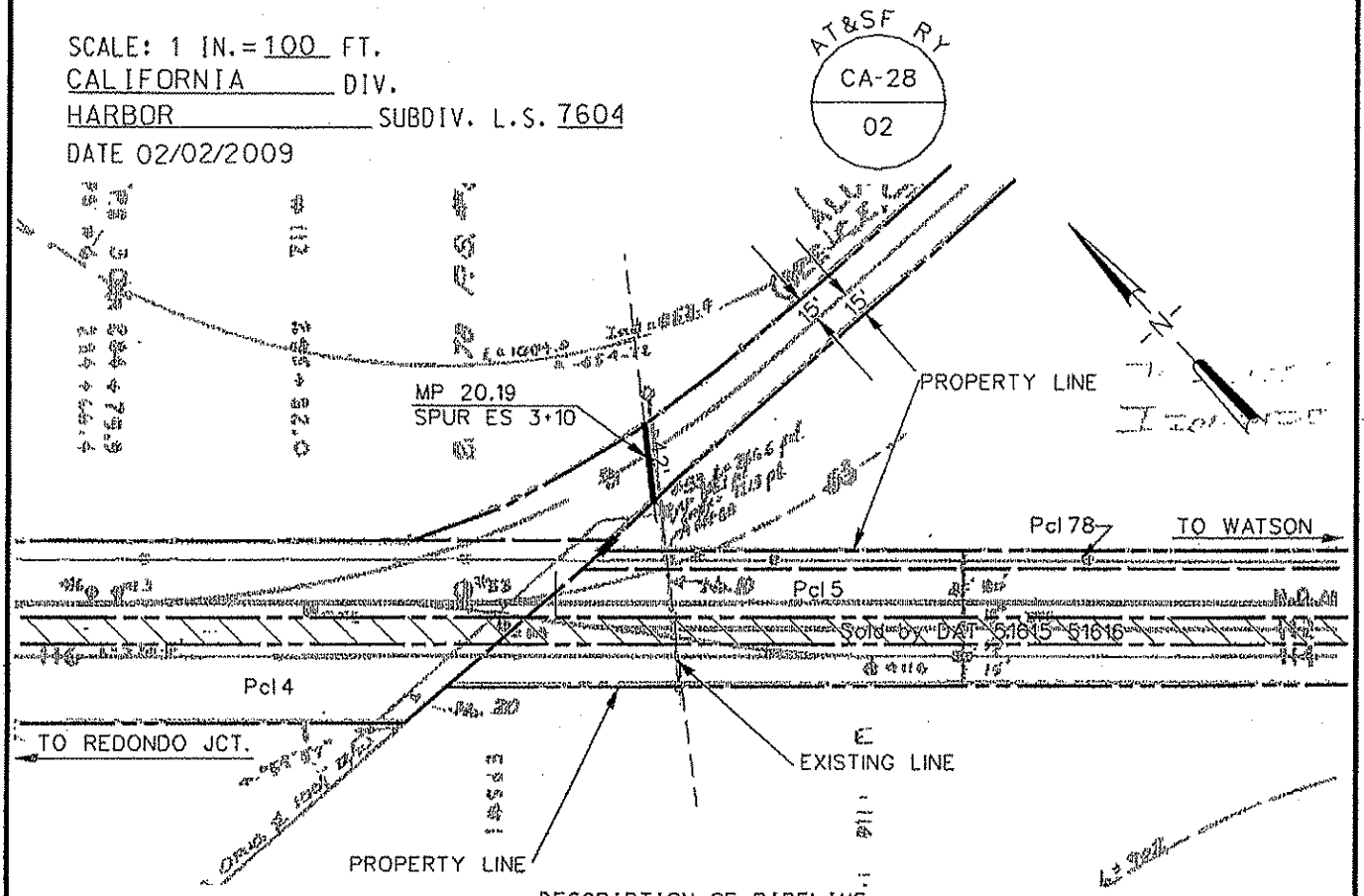

DESCRIPTION OF PIPELINE
PIPELINE SHOWN BOLD

	CARRIER PIPE	CASING PIPE		CARRIER PIPE	CASING PIPE
SIZE:	10"	24"	LENGTH ON R/W:	42'	42'
CONTENTS:	SEWAGE		WORKING PRESSURE:	GRAVITY	
PIPE MATERIAL:	VCP	STEEL	BURY: BASE/RAIL TO TOP OF CASING		12.5'
SPECIFICATION / GRADE:	ASTM-3	GR-B	BURY: NATURAL GROUND		3'
WALL THICKNESS:	1.25"	.406"	BURY: ROADWAY DITCHES		3'
COATING:	N/A	N/A	CATHODIC PROTECTION		N/A

VENTS: NUMBER N/A SIZE - HEIGHT OF VENT ABOVE GROUND -

NOTE: CASING TO BE JACKED OR DRY BORED ONLY

AT TORRANCE
COUNTY OF LOS ANGELES STATE OF CA

AFV

DRAWING NO. 1-45681

APPENDIX XI

BURLINGTON NORTHERN & SANTA FE RAILWAY COMPANY
AND
LOS ANGELES COUNTY METROPOLITAN TRANSPORTATION AUTHORITY

OVERPASS AGREEMENT

DEL AMO BLVD EXTENSION, T-30

OVERPASS AGREEMENT –
BNSF & LACMTA

The Table below summarizes information and requirements from the above-referenced Agreement between the City, BNSF Railway Company, and LA County MTA. The purpose is to inform a prospective Bidder and Contractor.

Sec. I. 1	☐ ~~Temporary controls during construction must be in compliance w/ MUTCD~~
Sec. III.6	☐ ~~Agency's Work are as follows:~~ ▪ ~~Construction of the Structure~~ ▪ ~~Grading and paving, including backfill of excavations and restoration of disturbed vegetation on BNSF's right of way~~ ▪ ~~Provide suitable drainage~~ ▪ ~~Install a gate along the boundary of BNSF's right of way in order to provide BNSF with permanent access for maintenance purposes~~ ▪ ~~Restrict pedestrian access during construction,~~ ▪ ~~Install and maintain an 8-ft. fence (throw fence) on the barrier of the Structure~~ ▪ ~~Job site cleanup~~
Sec. III. 7	☐ ~~Agency must apply said D.O.T. Crossing number 924652S and PUC Crossing number 002H-20.16A in a conspicuous location on the Structure~~
Sec. III. 8	☐ ~~Work must be performed in a manner that will not endanger or interfere with the safe and timely operations of BNSF and its facilities~~
Sec. III. 9	☐ ~~Agency shall require the subcontractors to execute Exhibit C documents~~
Sec. III.10	☐ ~~Agency must require its contractor(s) to notify BNSF's Roadmaster at least 30 calendar days before requesting a BNSF flagman in accordance with the requirements of Exhibit C~~ ☐ ~~Agency must require its contractor(s) to notify BNSF's Manager of Public Projects 30 calendar days prior to commencing work on BNSF property or near BNSF tracks~~
Sec. III.11	☐ ~~Agency or its contractor(s) must submit 4 copies of any plans (including two sets of calculations in English Units) for proposed shoring, falsework or cribbing to be used over, under, or adjacent to BNSF's tracks to BNSF's Manager of Public Projects for approval~~ ▪ ~~Shall comply with the BNSF Bridge Requirements set forth on Exhibit F and all applicable requirements.~~
Sec. III. 12(a)	☐ ~~Contractor will be responsible for contacting BNSF's Engineering Rep. (Greg Rousseau 909-386-4079), BNSF's Signal Rep. (Dennis Skeels 909-386-4053), and the telecommunications companies~~ ☐ ~~Contractor must mark all Lines shown on the plans or marked in the field~~ ☐ ~~Contractor must use all reasonable methods to determine if any other Lines may exist~~

Sec. III. 12(b)	☐ ~~Contractor will be responsible for the rearrangement of any facilities or Lines determined to interfere with the construction~~ ☐ ~~Contractor must cooperate fully with any telecommunications company(ies) in performing such rearrangements~~
Sec. III. 12(c)	☐ ~~Failure to mark or identify Lines will be sufficient cause for BNSF's engineering rep. to stop construction at no cost to the Agency or BNSF~~
Sec. III. 12(d)	☐ ~~The contractor indemnifies, defends, and holds harmless BNSF~~
Sec. III.13	☐ ~~Agency must require compliance with the obligations set forth in this agreement, including Exhibit C and Exhibit C-I~~
Sec. III. 4(a)(b) Sec. V. 1	☐ ~~All work must be performed in a good and workmanlike manner~~ ☐ ~~Changes or modifications during construction that affect safety or BNSF operations must be subject to BNSF's approval~~
Sec. III. 14(c)	☐ ~~No work will be commenced within BNSF's right-of-way until each of the prime contractors have (i) executed and delivered to BNSF Exhibit C-I and (ii) delivered to and secured BNSF's approval of the required insurance~~
Sec. III. 14(d)	☐ ~~Contractor shall give BNSF's rep. (Greg Rousseau 909-386-4079) four weeks advance notice of the proposed times and dates for work~~ ☐ ~~BNSF and Agency's contractor will establish mutually agreeable work windows for the Project~~ ☐ ~~Additional costs and expenses resulting from a change in work windows shall be accounted for in the contractor's expenses for the Project~~
Sec. III. 15(a)	☐ Changes or modifications during construction that affect safety or railway operations shall also be subject to LACMTA's approval
Sec. III. 15(b)	☐ No work shall be commenced within LACMTA's right of way until each of the prime contractors employed in connection (i) executed and delivered to LACMTA Exhibit "I-1" and (ii) delivered to and secured LACMTA's separate approval of the required insurance by said Exhibit "I-1"
Sec. III.16	☐ Agency must advise BNSF and LACMTA, in writing, of the completion date of the Project within 30 days after completion and the date on which Agency and/or its Contractor will meet with BNSF and LACMTA for purpose of making final inspection of the Project
Sec. III.17	☐ ~~Agency hereby releases, indemnifies, defends and holds harmless BNSF~~
Sec. III.18	☐ Agency shall indemnify and save harmless LACMTA
Sec. III.19	☐ ~~Agency must give BNSF's Manager of Public Projects written notice to proceed after receipt of necessary funds for the Project~~
Sec. III.21	☐ ~~Agency agrees to reimburse BNSF for work of an emergency nature caused by Agency or Agency's Contractor~~

Sec. III.22	☐ Agency agrees to reimburse LACMTA for work of an emergency nature caused by Agency or Agency's Contractor
Sec. V. 2	☐ ~~Work must be done in accordance with the Bridge Requirements set forth on Exhibit F and the detailed plans and specifications approved by BNSF~~
Sec. V.3	☐ Contractor(s) must reasonably adhere to the Project's construction schedule for all Project work
Sec. V. 4	☐ ~~BNSF will have the right to stop construction work if:~~ ▪ ~~Agency (or its contractors) performs the Project work in a manner contrary to the plans and specifications approved by BNSF~~ ▪ ~~Agency (or its contractors) prosecutes the Project work in a manner which is hazardous to BNSF property~~ ▪ ~~Insurance described in Exh. C-1 is cancelled during the Project~~ ▪ ~~Agency fails to pay BNSF~~
Sec. V. 5	☐ Agency must supervise and inspect the operations of all Agency contractors to assure compliance with the plans and specifications
Sec. V. 8	☐ No construction activities for the Project will be permitted during the fourth quarter of each calendar year
Sec. V. 9	☐ ~~Construction of Project will not commence until Agency gives BNSF 30 days written notice of such commencement (see sec. for requirements of notice)~~
Sec. V.12	☐ ~~Must provide one set of as built plans & disk with as-built CAD drawings to BNSF,~~ ☐ ~~"As built plans" must comply with Exhibit F~~ ☐ ~~"As built plans" must also include plan and profile, structural bridge drawings and specifications, and drainage plans~~

OVERPASS AGREEMENT

BNSF File No.924652S
Del Amo Boulevard Overpass
U.S. DOT No. 924652S
Harbor Subdivision, MP 20.16

This Agreement **("Agreement")**, is executed to be effective as of this _____ day of _____, 2009 **("Effective Date")**, by and between BNSF RAILWAY COMPANY, a Delaware corporation **("BNSF"), LOS ANGELES COUNTY METROPOLITAN TRANSPORTATION AUTHORITY** a body corporate and politic of the State of California, (**"LACMTA"**), and the CITY OF Torrance, a political subdivision of the State of California **("Agency").**

RECITALS:

WHEREAS, LACMTA is the owner of a branch line railroad right of way, track and appurtenances known as the Harbor Subdivision in the City of Torrance, California over which BNSF has operating rights and maintenance obligations over that portion of said line between Mile Post 0.05 and Mile Post 26.36; and

WHEREAS, BNSF owns a right of way and track adjacent to LACMTA's ownership northwesterly and southeasterly of Mile Post 20.16; and

WHEREAS, Agency desires to construct a new crossing at separated grades to be known as the Del Amo Boulevard Overhead and designated as D.O.T. No. 924652S located at Harbor Subdivision M.P. 20.16 to carry Del Amo Boulevard over the Harbor Subdivision tracks of BNSF and LACMTA; and

NOW, THEREFORE, in consideration of the mutual covenants and agreements of the parties contained herein, the receipt and sufficiency of which are hereby acknowledged, the parties agree as follows:

ARTICLE I – SCOPE OF WORK

1. The term **"Project"** as used herein includes any and all work related to the construction of the proposed Del Amo Blvd Overpass (hereinafter referred to as the **"Structure"**), more particularly described on the Exhibit A attached hereto and incorporated herein, including, but not limited to, any and all changes to telephone, telegraph, signal and electrical lines and appurtenances, temporary and permanent track work, fencing, grading, alterations to or new construction of drainage facilities, preliminary and construction engineering and contract preparation. Additionally, temporary controls during construction must be in compliance with Section 8A-5, "Traffic Controls During Construction and Maintenance" of the Uniform Traffic Control Devices Manual, U.S. Department of Transportation.

ARTICLE II – BNSF OBLIGATIONS

In consideration of the covenants of Agency and LACMTA set forth herein and the faithful performance thereof, BNSF agrees as follows:

1. BNSF hereby grants to Agency, its successors and assigns, upon and subject to the terms and conditions set forth in this Agreement, a temporary non-exclusive license (hereinafter called, "Temporary Construction License") to construct the Structure across or upon the portion of BNSF's right-of-way described further on Exhibit A, excepting and reserving BNSF's rights, and the rights of any others who have obtained, or may obtain, permission or authority from BNSF, to do the following:

(a) Operate, maintain, renew and/or relocate any and all existing railroad track or tracks, wires, pipelines and other facilities of like character upon, over or under the surface of said right-of-way;

(b) Construct, operate, maintain, renew and/or relocate upon said right-of-way, without limitation, such facilities as the BNSF may from time to time deem appropriate, provided such facilities do not materially interfere with the Agency's use of the Structure;

(c) Otherwise use or operate the right-of-way as BNSF may from time to time deem appropriate, provided such use or operations does not materially interfere with the Agency's use of the Structure.

(d) Require the Agency or its contractor to execute a Temporary Construction Crossing Agreement, for any temporary crossing requested to aid in the construction of this Project.

Prior to commencing any work on BNSF's property or right-of-way, Agency must pay BNSF the sum of ninety-nine thousand two-hundred forty-one and No/100 Dollars ($99,241.00) as compensation for the Temporary Construction License. The term of the Temporary Construction License begins thirty (30) calendar days following the Agency, or its contractor(s) notifying BNSF's Manager of Public Projects of its intent to commence work on BNSF property or near BNSF tracks, pursuant to Article III, Section 10 of this Agreement and ends on the earlier of (i) substantial completion of the Structure, or (ii) twenty-four (24) months following the Effective Date. The Temporary Construction License and related rights given by BNSF to Agency in this provision are without warranty of title of any kind, express or implied, and no covenant of warranty of title will be implied from the use of any word or words herein contained. The Temporary Construction License is for construction of the Structure only and shall not be used by Agency for any other purpose. Agency acknowledges and agrees that Agency shall not have the right, under the Temporary Construction License, to use the Structure. In the event Agency is evicted by anyone owning, or claiming title to or any interest in said right-of-way, BNSF will not be liable to Agency for any damages, losses or any expenses of any nature whatsoever. The granting of similar rights to others, subsequent to the date of this Agreement, will not impair or interfere with the rights granted to Agency herein.

Upon receiving the additional payment from Agency described in the subsequent sentence and provided Agency is in compliance with the terms and conditions of this Agreement, BNSF will grant to Agency, its successors and assigns, an easement (hereinafter called, the "Easement") to enter upon and use that portion of BNSF's right-of-way as is necessary to use and maintain the Structure, substantially in the form of Exhibit B attached to this Agreement. Agency must pay BNSF the sum of three-hundred ten thousand one-hundred thirty and No/100 Dollars ($310,130.00) as compensation for the Easement within thirty (30) days of issuing a Notice to Proceed pursuant to Article III, Section 19 of this Agreement. If Agency fails to pay BNSF within the thirty day time period set forth in the preceding sentence, BNSF may stop construction of the Project until full payment is received by BNSF.

2. BNSF will furnish all labor, materials, tools, and equipment for railroad work required for the construction of the Project, such railroad work and the estimated cost thereof being as shown on Exhibit D attached hereto and made a part hereof. In the event construction on the Project has not commenced within six (6) months following the Effective Date, BNSF may, in its sole and absolute discretion, revise the cost estimates set forth in said Exhibit D. In such event, the revised cost estimates will become a part of this Agreement as though originally set forth herein. Any item of work incidental to the items listed on Exhibit D not specifically mentioned therein may be included as a part of this Agreement upon written approval of Agency, which approval will not be unreasonably withheld. Construction of the Project must include the following railroad work by BNSF:

(a) Procurement of materials, equipment and supplies necessary for the railroad work;

(b) Preliminary engineering, design, and contract preparation;

(c) Furnishing of flagging services during construction of the Project as required and set forth in further detail on Exhibit C, attached to this Agreement and made a part hereof;

(d) Furnishing engineering and inspection as required in connection with the construction of the Project;

(e) Construction of Aluminum Spur connection to the Harbor Subdivision within BNSF right-of-way and northern connection to the realigned Aluminum Spur;

(f) Providing a contract project coordinator, at Agency's expense, to serve as a project manager for the Project; and

3. BNSF will do all railroad work set forth in Article II, Section 2 above on an actual cost basis, when BNSF, in its sole discretion, determines it is required by its labor agreements to perform such work with its own employees working under applicable collective bargaining agreements.

4. BNSF may charge Agency for insurance expenses, including self-insurance expenses, when such expenses cover the cost of Employer's Liability (including, without limitation, liability under the Federal Employer's Liability Act) in connection with the construction of the Project. Such charges will be considered part of the actual cost of the Project, regardless of the nature or amount of ultimate liability for injury, loss or death to BNSF's employees, if any.

5. During the construction of the Project, BNSF will send Agency progressive invoices detailing the costs of the railroad work performed by BNSF under this Agreement. Agency must reimburse BNSF for completed force-account work within forty-five (45) days of the date of the invoice for such work. Upon completion of the Project, BNSF will send Agency a detailed invoice of final costs, segregated as to labor and materials for each item in the recapitulation shown on Exhibit D. Pursuant to this section and Article IV, Section 7 herein, Agency must pay the final invoice within ninety (90) days of the date of the final invoice. BNSF will assess a finance charge of .033% per day (12% per annum) on any unpaid sums or other charges due under this Agreement which are past its credit terms. The finance charge continues to accrue daily until the date payment is received by BNSF, not the date payment is made or the date postmarked on the payment. Finance charges will be assessed on delinquent sums and other charges as of the end of the month and will be reduced by amounts in dispute and any unposted payments received by the month's end. Finance charges will be noted on invoices sent to Agency under this section. **For purposes of computing the time limits prescribed by Section 911.2 of the California Government Code for the presentment of a claim against the Agency the cause of action for failure to reimburse BNSF for the costs of the Railroad work performed by it pursuant to this Agreement shall be deemed to have accrued one hundred and eighty (180) days of the date of the final invoice.**

ARTICLE III – AGENCY OBLIGATIONS

In consideration of the covenants of BNSF set forth herein and the faithful performance thereof, Agency agrees as follows:

1. Agency must furnish to BNSF plans and specifications for the Project. Four sets of said plans (reduced size 11" x 17"), together with two copies of calculations, and two copies of specifications in **English Units**, must be submitted to BNSF for approval prior to commencement of any construction. BNSF will give Agency final written approval of the plans and specifications substantially in the form of Exhibit E, attached to this Agreement and made a part hereof. Upon BNSF's final written approval of the plans and specifications, said plans and specifications will become part of this Agreement and are hereby incorporated herein. Any approval of the plans and specifications by BNSF shall in no way obligate BNSF in any manner with respect to the finished product design and/or construction. Any approval by BNSF shall mean only that the plans and specifications meet the subjective standards of BNSF, and such approval by BNSF shall not be deemed to mean that the plans and specifications or construction is structurally sound and appropriate or that such plans and specifications meet applicable regulations, laws, statutes or local ordinances and/or building codes.

2. Agency must make any required application and obtain all required permits and approvals for the construction of the Project.

3. Agency must provide for and maintain minimum vertical and horizontal clearances, as required in Exhibit C and as approved by BNSF as part of the plans and specifications for the Project.

4. Agency must acquire all rights of way necessary for the construction of the Project.

5. Agency must make any and all arrangements, in compliance with BNSF's Utility Accommodation Manual attached hereto as Exhibit H, for the installation or relocation of wire lines, pipe lines and other facilities owned by private persons, companies, corporations, political subdivisions or public utilities other than BNSF which may be necessary for the construction of the Project.

6. Agency must construct the Project as shown on the attached Exhibit A and do all work ("Agency's Work") provided for in the plans and specifications for the Project, except railroad work that will be performed by BNSF hereunder. Agency must furnish all labor, materials, tools and equipment for the performance of Agency's Work. The principal elements of Agency's Work are as follows:

(a) Construction of the Structure;

(b) All necessary grading and paving, including backfill of excavations and restoration of disturbed vegetation on BNSF's right-of-way;

(c) Provide suitable drainage, both temporary and permanent;

(d) Installation of a gate in the fence along the boundary of BNSF's right of way in order to provide BNSF with permanent access for maintenance purposes;

(e) Restrict pedestrian access during construction; Agency, or its contractors, must also install and maintain fencing which will prevent unauthorized access to the construction site.

(f) Installation and maintenance of an 8-ft. high fence and/or concrete combination (throw fence) on the outside barrier of the Structure;

(g) Job site cleanup including removal of all construction materials, concrete debris, surplus soil, refuse, contaminated soils, asphalt debris, litter and other waste materials to the satisfaction of BNSF;

7. Agency must apply and maintain said D.O.T. Crossing number 924652S and Public Utility Commission Crossing number 002H-20.16-A in a conspicuous location on the Structure.

8. Agency's Work must be performed by Agency or Agency's contractor in a manner that will not endanger or interfere with the safe and timely operations of BNSF and its facilities.

9. For any future inspection or maintenance, either routine or otherwise, performed by subcontractors on behalf of the Agency, Agency shall require the subcontractors to execute the C documents. Prior to performing any future maintenance with its own personnel, Agency shall: comply with all of BNSF's applicable safety rules and regulations; require any Agency employee performing maintenance to complete the safety training program at the BNSF's Internet Website "contractororientation.com"; notify BNSF when, pursuant to the requirements of Exhibit C, a flagger is required to be present; procure, and have approved by BNSF's Risk Management Department, Railroad Protective Liability insurance.

10. Agency must require its contractor(s) to notify BNSF's Roadmaster at least thirty (30) calendar days prior to requesting a BNSF flagman in accordance with the requirements of Exhibit C attached hereto. Additionally, Agency must require its contractor(s) to notify BNSF's Manager of Public Projects thirty (30) calendar days prior to commencing work on BNSF property or near BNSF tracks.

11. Agency or its contractor(s) must submit four (4) copies of any plans (including two sets of calculations in **English Units**) for proposed shoring, falsework or cribbing to be used over, under, or adjacent to BNSF's tracks to BNSF's Manager of Public Projects for approval. The shoring, falsework or cribbing used by Agency's contractor shall comply with the BNSF Bridge Requirements set forth on Exhibit F and all applicable requirements promulgated by state and federal agencies, departments, commissions and other legislative bodies.

12. Agency must include the following provisions in any contract with its contractor(s) performing work on said Project:

(a) The Contractor is placed on notice that fiber optic, communication and other cable lines and systems (collectively, the "Lines") owned by various telecommunications companies may be buried on BNSF's property or right-of-way. The locations of these Lines have been included on the plans based on information from the telecommunications companies. The contractor will be responsible for contacting BNSF's Engineering Representative (Greg Rousseau 909-386-4079), BNSF's Signal Representative (Dennis Skeels 909-386-4053), and the telecommunications companies and notifying them of any work that may damage these Lines or facilities and/or interfere with their service. The contractor must also mark all Lines shown on the plans or marked in the field in order to verify their locations. The contractor must also use all reasonable methods when working in the BNSF right-of-way or on BNSF property to determine if any other Lines (fiber optic, cable, communication or otherwise) may exist.

(b) The Contractor will be responsible for the rearrangement of any facilities or Lines determined to interfere with the construction. The Contractor must cooperate fully with any telecommunications company(ies) in performing such rearrangements.

(c) Failure to mark or identify these Lines will be sufficient cause for BNSF's engineering representative (Greg Rousseau 909-386-4079) to stop construction at no cost to the Agency or BNSF until these items are completed.

(d) In addition to the liability terms contained elsewhere in this Agreement, the contractor hereby indemnifies, defends and holds harmless BNSF for, from and against all cost, liability, and expense whatsoever (including, without limitation, attorney's fees and court costs and expenses) arising out of or in any way contributed to by any act or omission of Contractor, its subcontractors, agents and/or employees that cause or in any way or degree contribute to (1) any damage to or destruction of any Lines by Contractor, and/or its subcontractors, agents and/or employees, on BNSF's property or within BNSF's right-of-way, (2) any injury to or death of any person employed by or on behalf of any telecommunications company, and/or its contractor, agents and/or employees, on BNSF's property or within BNSF's right-of-way, and/or (3) any claim or cause of action for alleged loss of profits or revenue by, or loss of service by a customer or user of such telecommunication company(ies).**THE LIABILITY ASSUMED BY CONTRACTOR WILL NOT BE AFFECTED BY THE FACT, IF IT IS A FACT, THAT THE DAMAGE, DESTRUCTION, INJURY, DEATH, CAUSE OF ACTION OR CLAIM WAS OCCASIONED BY OR CONTRIBUTED TO BY THE NEGLIGENCE OF BNSF, ITS AGENTS, SERVANTS, EMPLOYEES OR OTHERWISE, EXCEPT TO THE EXTENT THAT SUCH CLAIMS ARE PROXIMATELY CAUSED BY THE WILLFUL MISCONDUCT OR SOLE NEGLIGENCE OF BNSF.**

13. Agency must require compliance with the obligations set forth in this agreement, including Exhibit C and Exhibit C-1, and incorporate in each prime contract for construction of the Project, or the specifications therefor (i) the provisions set forth in Article III; (ii) the provisions set forth in Article IV; and (iii) the provisions set forth in Exhibit C and Exhibit C-I, attached hereto and by reference made a part hereof.

14. Except as otherwise provided below in this Section 14, all construction work performed hereunder by Agency for the Project within the limits of BNSF's right of way will be pursuant to a contract or contracts to be let by Agency, and all such contracts must include the following:

(a) All work performed under such contract or contracts within the limits of BNSF's right-of-way must be performed in a good and workmanlike manner in accordance with plans and specifications approved by BNSF;

(b) Changes or modifications during construction that affect safety or BNSF operations must be subject to BNSF's approval;

(c) No work will be commenced within BNSF's right-of-way until each of the prime contractors employed in connection with said work must have (i) executed and delivered to BNSF a letter agreement in the form of Exhibit C-I, and (ii) delivered to and secured BNSF's approval of the required insurance; and

(d) To facilitate scheduling for the Project, Agency shall have its contractor give BNSF's representative (Greg Rousseau 909-386-4079) four (4) weeks advance notice of the proposed times and dates for work windows. BNSF and Agency's contractor will establish mutually agreeable work windows for the Project. BNSF has the right at any time to revise or change the work windows, due to train operations or service obligations. BNSF will not be responsible for any additional costs and expenses resulting from a change in work windows. Additional costs and expenses resulting from a change in work windows shall be accounted for in the contractor's expenses for the Project.

(e) The plans and specifications for the Project must be in compliance with the Bridge Requirements set forth on Exhibit F, attached to this Agreement and incorporated herein.

15. That, except as hereinafter otherwise provided, all work to be performed hereunder by AGENCY in the construction of the Project within the limits of BNSF's right of way will be performed pursuant to a contract or contracts to be let by AGENCY, and all such contracts shall provide:

(a) That all work performed thereunder, within the limits of LACMTA's right of way shall be performed in a good and workmanlike manner, and in accordance with plans and specifications approved by LACMTA. Those changes or modifications during construction that affect safety or railway operations shall also be subject to LACMTA's approval;

(b) That no work shall be commenced within LACMTA's right of way until each of the prime contractors employed in connection with said work shall have (i) executed and delivered to LACMTA a letter agreement in the form of Exhibit "I-1" and (ii) delivered to and secured LACMTA's separate approval of the required insurance by said Exhibit "I-1";

(c) That if, in AGENCY's opinion, it shall be for its best interest, AGENCY may direct that the construction of the Project be done by day labor under the direction and control of AGENCY, or if at any time, in the opinion of AGENCY, the contractor has failed to prosecute with diligence the work specified in and by the terms of said contract, it may, in the manner provided by law, terminate the contractor's control over said work and take possession of all or any part thereof and proceed to complete the same by day labor or by employing another contractor(s), provided that all such contractor(s) shall be required to comply with the obligations in favor of LACMTA hereinabove set forth and, provided further, that if such construction is performed by day labor, AGENCY will, at its expense, procure and maintain on behalf of LACMTA the insurance required by Exhibit "I-1". Article 3, section 14

16. Agency must advise the appropriate BNSF Manager of Public Projects as well as LACMTA's Manager Third Party Coordination, in writing, of the completion date of the Project within thirty (30) days after such completion date. Additionally, Agency must notify BNSF's Manager of Public Projects as well

as LACMTA's Manager Third Party Coordination, in writing, of the date on which Agency and/or its Contractor will meet with BNSF and LACMTA for the purpose of making final inspection of the Project.

17. **TO THE FULLEST EXTENT PERMITTED BY LAW, AGENCY HEREBY RELEASES, INDEMNIFIES, DEFENDS AND HOLDS HARMLESS BNSF, ITS AFFILIATED COMPANIES, PARTNERS, SUCCESSORS, ASSIGNS, LEGAL REPRESENTATIVES, OFFICERS, DIRECTORS, SHAREHOLDERS, EMPLOYEES AND AGENTS FOR, FROM AND AGAINST ANY AND ALL CLAIMS, LIABILITIES, FINES, PENALTIES, COSTS, DAMAGES, LOSSES, LIENS, CAUSES OF ACTION, SUITS, DEMANDS, JUDGMENTS AND EXPENSES (INCLUDING, WITHOUT LIMITATION, COURT COSTS AND ATTORNEYS' FEES) OF ANY NATURE, KIND OR DESCRIPTION OF ANY PERSON (INCLUDING, WITHOUT LIMITATION, THE EMPLOYEES OF THE PARTIES HERETO) OR ENTITY DIRECTLY OR INDIRECTLY ARISING OUT OF, RESULTING FROM OR RELATED TO (IN WHOLE OR IN PART) (I) THE USE, OCCUPANCY OR PRESENCE OF AGENCY, ITS CONTRACTORS, SUBCONTRACTORS, EMPLOYEES OR AGENTS IN, ON, OR ABOUT THE CONSTRUCTION SITE, (II) THE PERFORMANCE, OR FAILURE TO PERFORM BY THE AGENCY, ITS CONTRACTORS, SUBCONTRACTORS, EMPLOYEES, OR AGENTS, ITS WORK OR ANY OBLIGATION UNDER THIS AGREEMENT, (III) THE SOLE OR CONTRIBUTING ACTS OR OMISSIONS OF AGENCY, ITS CONTRACTORS, SUBCONTRACTORS, EMPLOYEES, OR AGENTS IN, ON, OR ABOUT THE CONSTRUCTION SITE, (IV) AGENCY'S BREACH OF THE TEMPORARY CONSTRUCTION LICENSE OR EASEMENT GRANTED TO AGENCY PURSUANT TO ARTICLE II OF THIS AGREEMENT, (V) ANY RIGHTS OR INTERESTS GRANTED TO AGENCY PURSUANT TO THE TEMPORARY CONSTRUCTION LICENSE OR EASEMENT DISCUSSED IN ARTICLE II OF THIS AGREEMENT, (VI) AGENCY'S OCCUPATION AND USE OF BNSF'S PROPERTY OR RIGHT-OF-WAY, INCLUDING, WITHOUT LIMITATION, SUBSEQUENT MAINTENANCE OF THE STRUCTURE BY AGENCY, OR (VII) AN ACT OR OMISSION OF AGENCY OR ITS OFFICERS, AGENTS, INVITEES, EMPLOYEES OR CONTRACTORS OR ANYONE DIRECTLY OR INDIRECTLY EMPLOYED BY ANY OF THEM, OR ANYONE THEY CONTROL OR EXERCISE CONTROL OVER. THE LIABILITY ASSUMED BY AGENCY WILL NOT BE AFFECTED BY THE FACT, IF IT IS A FACT, THAT THE DAMAGE, DESTRUCTION, INJURY OR DEATH WAS OCCASIONED BY OR CONTRIBUTED TO BY THE NEGLIGENCE OF BNSF, ITS AGENTS, SERVANTS, EMPLOYEES OR OTHERWISE, EXCEPT TO THE EXTENT THAT SUCH CLAIMS ARE PROXIMATELY CAUSED BY THE WILLFUL MISCONDUCT OR SOLE NEGLIGENCE OF BNSF.**

18. **AGENCY SHALL INDEMNIFY AND SAVE HARMLESS LACMTA, THEIR AGENTS AND EMPLOYEES AGAINST ALL LIABILITY, CLAIMS, DEMANDS, DAMAGES, OR COSTS FOR (A) DEATH OR BODILY INJURY TO PERSONS INCLUDING, WITHOUT LIMITATION, THE EMPLOYEES OF THE PARTIES HERETO, (B) INJURY TO PROPERTY INCLUDING, WITHOUT LIMITATION, THE PROPERTY OF THE PARTIES HERETO, (C) DESIGN DEFECTS, OR (D) ANY OTHER LOSS, DAMAGE OR EXPENSE ARISING UNDER EITHER (A), (B), OR (C), AND ALL FINES OR PENALTIES IMPOSED UPON OR ASSESSED AGAINST LACMTA BY REASON OF THE PROJECT, AND ALL EXPENSES OF INVESTIGATING AND DEFENDING AGAINST SAME, ARISING IN ANY MANNER OUT OF (1) ACTIVITIES, USE, OR PRESENCE, OR NEGLIGENCE OF AGENCY, OR AGENCY'S EMPLOYEES, OR AGENCY'S CONTRACTORS, SUBCONTRACTORS, AGENTS, INVITEES OR ANY OF THEIR EMPLOYEES ON OR NEAR LACMTA'S RIGHT OF WAY, OR (2) THE PERFORMANCE, OR FAILURE TO PERFORM, BY THE AGENCY, ITS CONTRACTORS, SUBCONTRACTORS, OR AGENTS, ITS WORK OR ANY OBLIGATION UNDER THIS AGREEMENT. NOTHING CONTAINED IN THIS PROVISION IS INTENDED TO, NOR SHALL BE DEEMED OR CONSTRUED TO, INDEMNIFY LACMTA FOR THEIR RESPECTIVE SOLE NEGLIGENCE OR WILLFUL MISCONDUCT, OR THAT OF THEIR AGENTS, SERVANTS OR INDEPENDENT CONTRACTORS WHO ARE DIRECTLY RESPONSIBLE TO THEM, AS PROVIDED IN CALIFORNIA CIVIL CODE SECTION 2782.**

19. Agency must give BNSF's Manager of Public Projects written notice to proceed ("**Notice to Proceed**") with the railroad work after receipt of necessary funds for the Project. BNSF will not begin the railroad work (including, without limitation, procurement of supplies, equipment or materials) until written notice to proceed is received from Agency.

20. Agency agrees to provide BNSF with one of the following credit enhancements guaranteeing the **total** amount of Agency's financial obligations (including, without limitation, liquidated damages, indemnity obligations and other expenses) under this Agreement:

(a) Irrevocable Bank Letter of Credit drawn upon a bank satisfactory to BNSF;
(b) Surety Bond underwritten by an insurance company listed in the Department of Treasury Federal Register with terms acceptable to BNSF, in BNSF's sole discretion;
(c) A posted cash deposit via wire transfer to a BNSF deposit account; or
(d) An interest bearing account in the name of the Agency with BNSF listed as the beneficiary.

Any irrevocable letter of credit or surety bond provided to BNSF pursuant to this provision shall have a minimum term of eighteen (18) months. The bank issuing the letter of credit and the insurance company issuing the surety bond shall notify BNSF thirty (30) days prior to the expiration date of the letter of credit or the surety bond. Upon expiration of any surety bond or letter of credit, Agency must immediately provide BNSF with a substitute letter of credit, surety bond or cash deposit as set forth above until Agency's financial obligations to BNSF are fully and finally satisfied.

Any cash deposit provided under this provision will be held in a non-interest bearing account in the name of BNSF. If Agency's financial obligations at the end of the Project are less than the amount of the cash deposit, BNSF shall refund any remaining sum to Agency.

Agency should forward the letter of credit or the surety bond to BNSF Manager of Credit, 3001 Lou Menk Drive, Fort Worth, TX 76131 (phone: 817-352-4194). If posting a cash deposit pursuant to this provision, contact BNSF Manager of Credit to obtain the BNSF account information.

21. Agency agrees to reimburse BNSF for work of an emergency nature caused by Agency or Agency's contractor in connection with the Project which BNSF deems is reasonably necessary for the immediate restoration of railroad operations, or for the protection of persons or BNSF property. Such work may be performed by BNSF without prior approval of Agency and Agency agrees to fully reimburse BNSF for all such emergency work.

22. Agency agrees to reimburse LACMTA for work of an emergency nature caused by AGENCY or AGENCY's contractor, in connection with the Project which LACMTA deems is reasonably necessary for the immediate restoration of railroad operations, or for the protection of persons or property. Such work may be performed by LACMTA without prior approval of AGENCY and AGENCY agrees to reimburse LACMTA for all such emergency work.

ARTICLE IV – LACMTA OBLIGATIONS

IN CONSIDERATION of the covenants of AGENCY and BNSF hereinafter contained, and the faithful performance thereof, LACMTA agrees:

1. To grant and hereby does grant to AGENCY, its successors and assigns, all upon and subject to the terms and conditions hereinafter set forth, the right to enter upon and use that portion of LACMTA's rail corridor necessary to construct the Project and to maintain the Structure as shown on said Exhibit "A", excepting and reserving the right to be exercised by LACMTA, and by any others who have obtained, or may obtain, permission or authority from LACMTA so to do:

   (a) To operate, maintain, renew and/or relocate any and all existing railroad track or tracks, wires, pipes and other facilities of like character upon, over or under the surface of LACMTA's rail corridor.

   (b) From time to time to construct, operate, maintain, renew and/or relocate upon LACMTA's rail corridor additional facilities of the character described in Clause (a) of this Section 1.

   This right is given without warranty of title of any kind, express or implied, and no covenant of warranty

of title shall be implied from the use of any word or words herein contained. In case of the eviction of AGENCY by anyone owning, or claiming title to or any interest *in* LACMTA's rail corridor, LACMTA shall not be liable to AGENCY for any damage of any nature whatsoever. The granting of similar rights to others, subsequent to the date of this Agreement, shall not significantly impair or interfere with the right granted to AGENCY pursuant to this Agreement.

2. To grant to AGENCY, as promptly as feasible following execution of this Agreement and in no case later than upon completion and acceptance of AGENCY's Work pursuant to Section 19, Article III, a permanent and exclusive easement across LACMTA's right of way as outlined in Exhibit "I", attached hereto and by reference made a part hereof.

3. To sign the agreement between AGENCY's contractor and LACMTA, Exhibit "I-1", attached hereto and by reference made a part hereof, and promptly approve the required insurance documents following submission by the contractor of documents that in the opinion of LACMTA satisfy the requirements."

4. To review plans and specifications and to furnish supervision of the construction as it might affect LACMTA's track and right of way at the expense of the AGENCY. The Estimate of cost of said work is set forth in Exhibit K.

5. To perform all work on an actual cost basis and to submit to AGENCY for payment a detailed statement for the cost of work performed by LACMTA.

ARTICLE V – JOINT OBLIGATIONS

IN CONSIDERATION of the premises, the parties hereto mutually agree to the following:

1. All work contemplated in this Agreement must be performed in a good and workmanlike manner and each portion must be promptly commenced by the party obligated hereunder to perform the same and thereafter diligently prosecuted to conclusion in its logical order and sequence. Furthermore, any changes or modifications during construction which affect BNSF will be subject to BNSF's written approval prior to the commencement of any such changes or modifications from the BNSF Project Manager. Any changes or modifications during construction that affect LACMTA shall be subject to approval by LACMTA prior to commencement of such changes or modifications.

2. The work hereunder must be done in accordance with the Bridge Requirements set forth on Exhibit F and the detailed plans and specifications approved by BNSF.

3. Agency must require its contractor(s) to reasonably adhere to the Project's construction schedule for all Project work. The parties hereto mutually agree that BNSF's failure to complete the railroad work in accordance with the construction schedule due to inclement weather or unforeseen railroad emergencies will not constitute a breach of this Agreement by BNSF and will not subject BNSF to any liability. Regardless of the requirements of the construction schedule, BNSF reserves the right to reallocate the labor forces assigned to complete the railroad work in the event of an emergency to provide for the immediate restoration of railroad operations (BNSF or its related railroads) or to protect persons or property on or near any BNSF owned property. BNSF will not be liable for any additional costs or expenses resulting from any such reallocation of its labor forces. The parties mutually agree that any reallocation of labor forces by BNSF pursuant to this provision and any direct or indirect consequences or costs resulting from any such reallocation will not constitute a breach of this Agreement by BNSF.

4. BNSF will have the right to stop construction work on the Project if any of the following events take place: (i) Agency (or any of its contractors) performs the Project work in a manner contrary to the plans and specifications approved by BNSF; (ii) Agency (or any of its contractors), in BNSF's opinion, prosecutes the Project work in a manner which is hazardous to BNSF property, facilities or the safe and expeditious movement of railroad traffic; (iii) the insurance described in the attached Exhibit C-1 is canceled during the course of the Project; or (iv) Agency fails to pay BNSF for the Temporary

Construction License or the Easement pursuant to Article II, Section 1 of this Agreement. The work stoppage will continue until all necessary actions are taken by Agency or its contractor to rectify the situation to the satisfaction of BNSF's Division Engineer or until additional insurance has been delivered to and accepted by BNSF. In the event of a breach of (i) this Agreement, (ii) the Temporary Construction License, or (iii) the Easement, BNSF may immediately terminate the Temporary Construction License or the Easement. Any such work stoppage under this provision will not give rise to any liability on the part of BNSF. BNSF's right to stop the work is in addition to any other rights BNSF may have including, but not limited to, actions or suits for damages or lost profits. In the event that BNSF desires to stop construction work on the Project, BNSF agrees to immediately notify the following individual in writing:

Craig Bilezerian, P.E.
Engineering Manager | Public Works Department
City of Torrance
20500 Madrona Avenue
Torrance, CA 90503
310.618.3054 voice
310.781.6902 fax
cbilezerian@torrnet.com

5. Agency must supervise and inspect the operations of all Agency contractors to assure compliance with the plans and specifications approved by BNSF, the terms of this Agreement and all safety requirements of the BNSF railroad. If BNSF determines that proper supervision and inspection is not being performed by Agency personnel at any time during construction of the Project, BNSF has the right to stop construction (within or adjacent to its operating right-of-way). Construction of the Project will not proceed until Agency corrects the situation to BNSF's reasonable satisfaction. If BNSF feels the situation is not being corrected in an expeditious manner, BNSF will immediately notify City of Torrance Engineering Manager, Public Works Department for appropriate corrective action.

6. Pursuant to this section and Article II, Section 6 herein, Agency must reimburse BNSF in full for the actual costs of all work performed by BNSF under this Agreement.

That AGENCY will reimburse LACMTA in full for the actual costs for all work performed by LACMTA pursuant to this Agreement.

In any action brought under this Agreement, the prevailing Party shall be entitled to recover its actual costs and attorneys fees pursuant to California Civil Code Section 1717, as well as other litigation costs, including expert witness fees. The prevailing Party shall also be entitled to recover all actual attorneys fees and litigation costs incurred in connection with the enforcement of a judgment arising from such action or proceeding.

7. All expenses detailed in statements sent to Agency pursuant to Article II, Section 6 herein will comply with the terms and provisions of the Federal Aid Highway Program Manual, U.S. Department of Transportation, as amended from time to time, which manual is hereby incorporated into and made a part of this Agreement by reference. The parties mutually agree that BNSF's preliminary engineering, design, and contract preparation costs described in Article II, Section 2 herein are part of the costs of the Project even though such work may have preceded the date of this Agreement.

8. The parties mutually agree that no construction activities for the Project, nor future maintenance of the Structure once completed, will be permitted during the fourth quarter of each calendar year. Emergency work will be permitted only upon prior notification to BNSF's Network Operations Center (telephone number: 800 832-5452). The parties hereto mutually understand and agree that trains cannot be subjected to delay during this time period.

9. Subject to the restrictions imposed by Article IV, Section 9 above, the construction of the Project will not commence until Agency gives BNSF's Manager of Public Projects thirty (30) days prior written notice of such commencement. The commencement notice will reference BNSF's file number 924652S and D.O.T. Crossing No. 924652S and must state the time that construction activities will begin.

10. In addition to the terms and conditions set forth elsewhere in this Agreement, including, but not limited to, the terms and conditions stated in Exhibit F, BNSF and Agency agree to the following terms upon completion of construction of the Project:

(a) Agency will own and maintain, at its sole cost and expense, the Structure, the highway approaches, and appurtenances thereto, lighting, drainage and any access roadways to BNSF gates installed pursuant to this Agreement. BNSF may, at its option, perform maintenance on the Structure in order to avoid conflicts with train operations. BNSF will notify Agency prior to performing any such maintenance on the Structure. In the event such maintenance involves emergency repairs, BNSF will notify Agency at its earliest opportunity. Agency must fully reimburse BNSF for the costs of maintenance performed by BNSF pursuant to this subsection (b).

(b) Agency must, at Agency's sole cost and expense, keep the Structure painted and free from graffiti.

(c) Agency must provide BNSF with any and all necessary permits and maintain roadway traffic controls, at no cost to BNSF, whenever requested by BNSF to allow BNSF to inspect the Structure or to make emergency repairs thereto.

(d) It is expressly understood by Agency and BNSF that any right to install utilities will be governed by a separate permit or license agreement between the parties hereto.

(e) Agency must keep the Structure and surrounding areas clean and free from birds, pigeons, scavengers, vermin, creatures and other animals.

(f) If Agency (including its contractors and agents) or BNSF, on behalf of Agency, performs (i) alterations or modifications to the Structure, or (ii) any maintenance or other work on the Structure with heavy tools, equipment or machinery at ground surface level horizontally within 25'-0" of the centerline of the nearest track, or (iii) any maintenance or other work outside the limits of the deck of the Structure vertically above the top of the rail, then Agency or its contractors and/or agents must procure and maintain the following insurance coverage:

Railroad Protective Liability insurance naming only the ***Railroad*** as the Insured with coverage of at least $5,000,000 per occurrence and $10,000,000 in the aggregate. The policy Must be issued on a standard ISO form CG 00 35 10 93 and include the following:

- Endorsed to include the Pollution Exclusion Amendment (ISO form CG 28 31 10 93)
- Endorsed to include the Limited Seepage and Pollution Endorsement.
- Endorsed to remove any exclusion for punitive damages.
- No other endorsements restricting coverage may be added.
- The original policy must be provided to the ***Railroad*** prior to performing any work or services under this Agreement

As used in this paragraph, "***Railroad***" means "Burlington Northern Santa Fe Corporation", "BNSF RAILWAY COMPANY" and the subsidiaries, successors, assigns and affiliates of each.

In lieu of providing a Railroad Protective Liability Policy, Agency may participate in BNSF's Blanket Railroad Protective Liability Insurance Policy **if available** to Agency or its contractors. The limits of coverage are the same as above.

11. Agency hereby grants to BNSF, at no cost or expense to BNSF, a permanent right of access from Agency property to BNSF tracks for maintenance purposes.

12. Agency must provide one set of as built plans (prepared in **English Units)** to BNSF, as well as one set of computer diskettes containing as built CAD drawings of the Structure and identifying the

software used for the CAD drawings. The "as built plans" must comply with the Bridge Requirements set forth on Exhibit F and depict all information in BNSF engineering stationing and mile post pluses. The "as built plans" must also include plan and profile, structural bridge drawings and specifications, and drainage plans. All improvements and facilities must be shown.

13. Subject to the restrictions imposed by Article IV, Section 9 above, Agency must notify and obtain prior authorization from BNSF's Manager of Public Projects before entering BNSF's right-of-way for **INSPECTION OR MAINTENANCE** purposes, and the BNSF Manager of Public Projects will determine if flagging is required. If the construction work hereunder is contracted, Agency must require its prime contractor(s) to comply with the obligations set forth in Exhibit C and Exhibit C-1, as the same may be revised from time to time. Agency will be responsible for its contractor(s) compliance with such obligations.

14. BNSF and LACMTA may, at its expense, make future changes or additions to the railroad components of the Structure if necessary or desirable, in BNSF's and/or LACMTA's sole discretion, including, without limitation the following: (i) the right to raise or lower the grade or change the alignment of its tracks, (ii) the right to lay additional track or tracks, or (iii) the right to build other facilities in connection with the operation of its railroad. Such changes or additions must not change or alter the highway components of the Structure. If it becomes necessary in the future to change, alter, widen or reconstruct the highway components of the Structure to accommodate railroad projects, the cost of such work, including any cost incidental to alteration of railroad or highway facilities made necessary by any such changes to the Structure, will be the sole responsibility of the Agency.

15. Agency may, at Agency's sole expense, alter or reconstruct the highway components of the Structure if necessary or desirable, due to traffic conditions or pedestrian or other recreational traffic, provided, however, that any such alteration or reconstruction must not encroach further upon or occupy the surface of BNSF's and/or LACMTA's right-of-way to a greater extent than is contemplated by the plans and specifications to be approved by BNSF pursuant to Article III, Section 1 herein, without obtaining BNSF's and/or LACMTA's prior written consent and the execution of a supplement to this Agreement or the completion of a separate agreement.

16. Any books, papers, records and accounts of the parties hereto relating to the work hereunder or the costs or expenses for labor and material connected with the construction will at all reasonable times be open to inspection and audit by the agents and authorized representatives of the parties hereto, as well as the State of California and the Federal Highway Administration, for a period of one (1) year from the date of the final BNSF invoice under this Agreement.

17. The covenants and provisions of this Agreement are binding upon and inure to the benefit of the successors and assigns of the parties hereto. Notwithstanding the preceding sentence, neither party hereto may assign any of its rights or obligations hereunder without the prior written consent of the other party.

18. In the event construction of the Project does not commence within 36 months [three (3) years] of the Effective Date, this Agreement will become null and void.

19. Neither termination nor expiration of this Agreement will release either party from any liability or obligation under this Agreement, whether of indemnity or otherwise, resulting from any acts, omissions or events happening prior to the date of termination or expiration.

20. To the maximum extent possible, each provision of this Agreement will be interpreted in such a manner as to be effective and valid under applicable law. If any provision of this Agreement is prohibited by, or held to be invalid under, applicable law, such provision will be ineffective solely to the extent of such prohibition or invalidity and the remainder of the provision will be enforceable.

21. This Agreement (including exhibits and other documents, manuals, etc. incorporated herein) is the full and complete agreement between BNSF and Agency with respect to the subject matter herein and supersedes any and all other prior agreements between the parties hereto.

22. Any notice provided for herein or concerning this Agreement must be in writing and will be deemed sufficiently given when sent by certified mail, return receipt requested, to the parties at the following addresses:

Los Angeles County Metropolitan Transportation Authority:	Manager Third Party Coordination One Gateway Plaza Los Angeles, CA. 90012 P.O. Box 194 Los Angeles, CA. 90053 Telephone No.: (213) 922 7324 FAX No.: (213) 922 7136
The BNSF Railway Company:	Manager Public Projects 740 East Carnegie Drive San Bernardino, CA 92408-3571 Telephone No.: 909-386-4472 Fax No.: 909-386-4479
The BNSF Railway Company:	BNSF's Division Engineer 740 E. Carnegie Drive San Bernardino, CA. 92408-3571 Telephone No.: (909) 386 4504 Fax No.: (909) 386 4070
The BNSF Railway Company:	BNSF's Roadmaster 3790 East 26th. Street Los Angeles, CA. 90023 Telephone No.: (323) 307-5815 Fax No.: (323) 267-4049
CITY of Torrance:	CITY of Torrance City Clerk 3031 Torrance Blvd Torrance, CA 90509-2970 Fax No.: (310) 618-2931 cc: City of Torrance Public Works ATTN: Craig Bilezerian 20500 Madrona Ave Torrance, CA 90503 Telephone No.: (310) 618-3054 Fax No.: (310) 781-6902

IN WITNESS WHEREOF, the parties hereto have caused this Agreement to be executed and witnessed by its duly qualified and authorized officials, as of the day and year first above written.

BNSF RAILWAY COMPANY

By: _____
Printed Name: David L. Freeman
Title: Vice President Engineering

WITNESS:

_____

LOS ANGELES COUNTY METROPOLITAN

By: _____
Printed Name: _____
Title: _____

WITNESS:

_____

CITY OF TORRANCE
a Municipal Corporation

By:_____
Frank Scotto, Mayor

ATTEST:

_____
Sue Herbers, City Clerk

APPROVED AS TO FORM AND CONTENT

JOHN L. FELLOWS III
City Attorney

By_____
Deputy City Attorney

Exhibit A

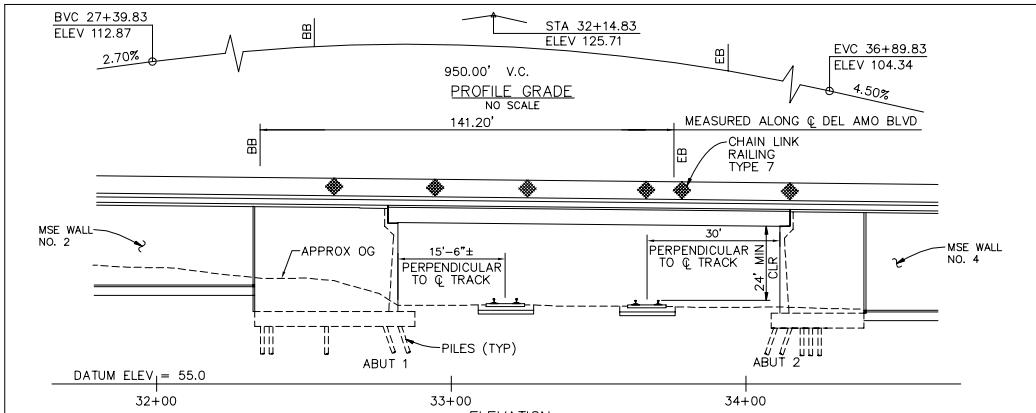

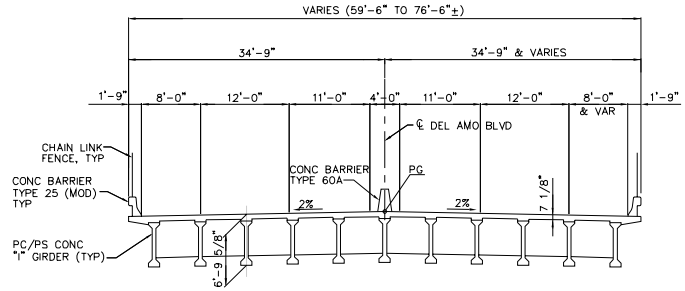

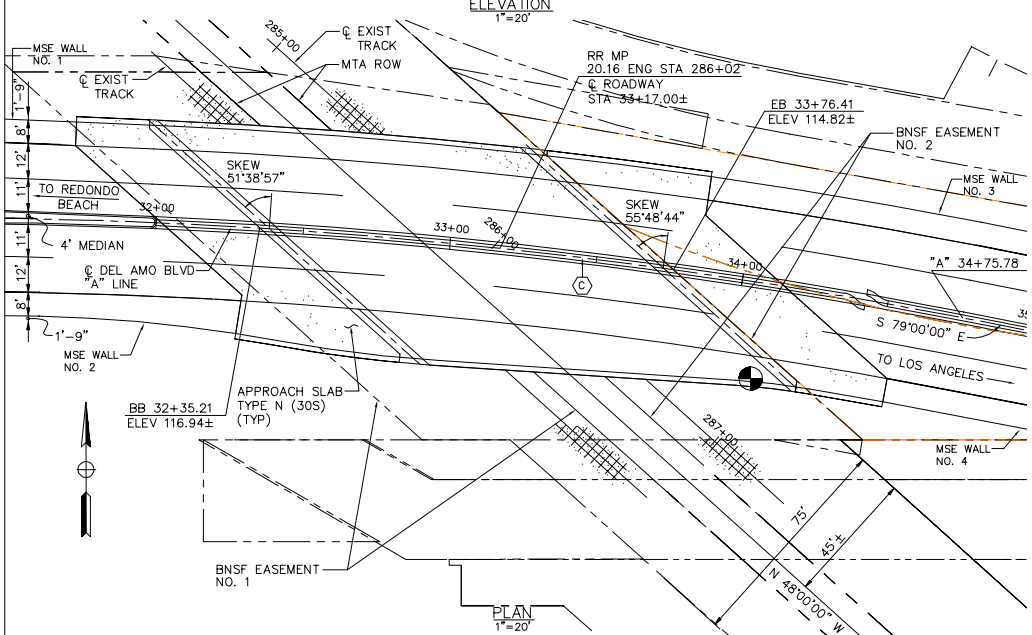

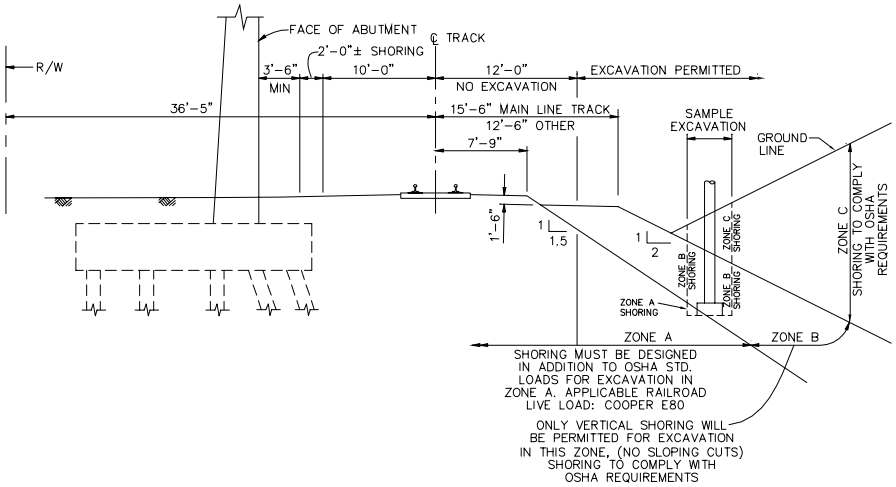

EXHIBIT "A"

INDICATES POINT OF MINIMUM VERTICAL CLEARANCE

DEL AMO BLVD "A" LINE CURVE DATA				
CURVE	△	L	R	T
C	11°02'29"	356.51'	1850.00'	178.81'

GENERAL PLAN

DOT CROSSING NO. 924 652 S
PUC NO. M.P.20.12A

DEL AMO BOULEVARD EXTENSION

MOFFATT & NICHOL
3780 KILROY AIRPORT WAY, SUITE 600
LONG BEACH, CALIFORNIA, 90806
562-426-9551

REGISTERED PROFESSIONAL ENGINEER ARUN K. JAIN No. 26247 EXP. 3/31/10 CIVIL STATE OF CALIFORNIA

REV.	DATE	DESCRIPTION	BY	CHECKED

CITY OF TORRANCE
PUBLIC WORKS DEPARTMENT

DRAWN: F. SAMSON
DESIGNED: A. JAIN
PROJECT MANAGER: W. E. QUESADA

APPROVED:

CRAIG BILEZERIAN
CITY ENGINEER
R.C.E. NO. 55339
DATE EXP. 12/31/08

SCALE: AS SHOWN
SHEET 66 OF 134

SHEET S-101

PLAN NO. ST-1013

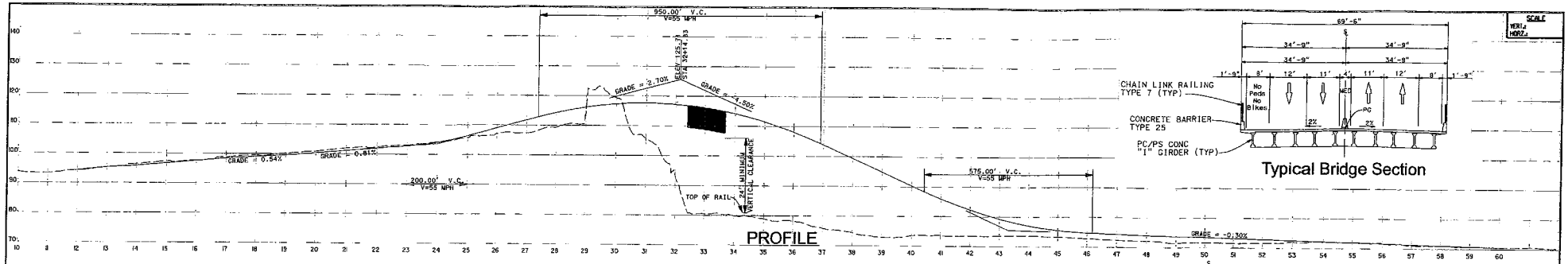

PROFILE

Typical Bridge Section

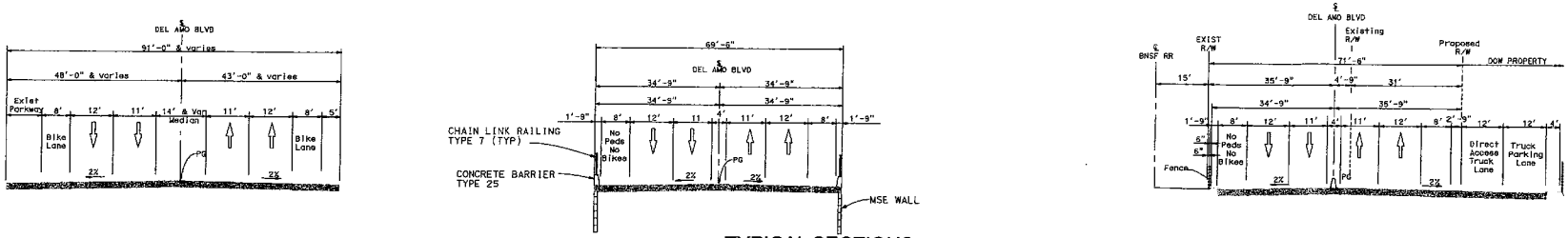

TYPICAL SECTIONS

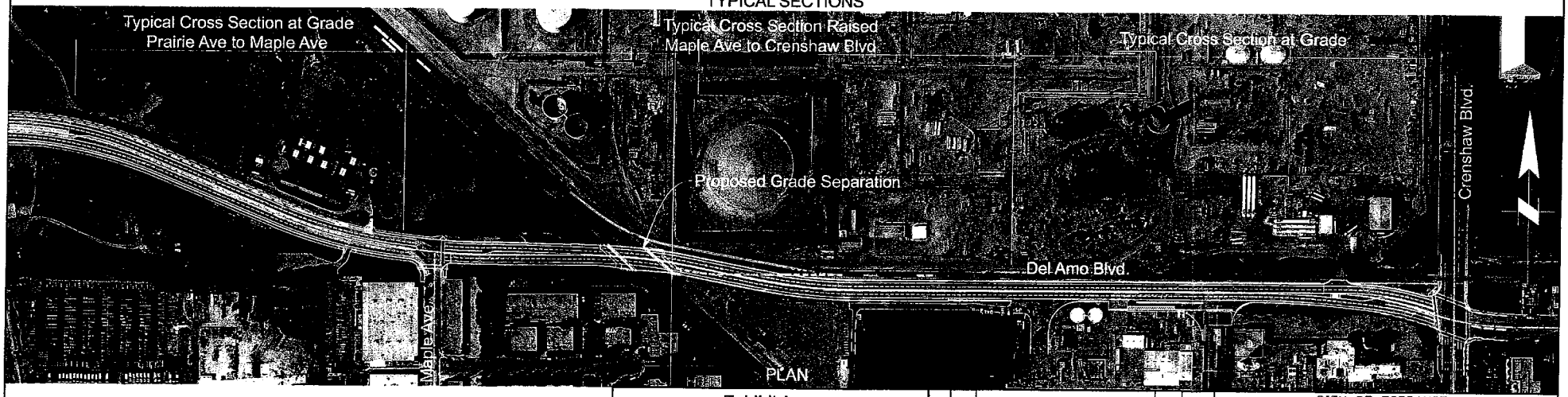

PLAN

Exhibit A:
General Plan and Profile
Sheet 2 of 2

DEL AMO BOULEVARD EXTENSION

MOFFATT & NICHOL
3780 KILROY AIRPORT WAY, SUITE 600
LONG BEACH, CALIFORNIA 90806
(562) 426-9551

REV.	DATE	DESCRIPTION	BY	CHECKED

CITY OF TORRANCE
PUBLIC WORKS DEPARTMENT

DRAWN:
DESIGNED:
PROJECT MANAGER: CRAIG BILEZERIAN
APPROVED:
ROBERT J. BESTE DATE
PUBLIC WORKS DIRECTOR
R.C.E. NO. 58737
SCALE: AS SHOWN SHEET ___ OF ___
PLAN NO. P:\[illegible]\EXHIBIT1.DGN

P:\5996\Dow Access Study\Exhibit1A.dgn

Exhibit B

EASEMENT AGREEMENT

FOR _____

(Overpass Agreement)

THIS EASEMENT AGREEMENT FOR _____ ("**Easement Agreement**") is made and entered into as of the ____ day of _____ 20___ ("**Effective Date**"), by and between BNSF RAILWAY COMPANY, a Delaware corporation ("**Grantor**"), and the City of Torrance, a municipal corporation ("**Grantee**").

A. Grantor owns or controls certain real property situated at or near the vicinity of _____, County of Los Angeles, State of CA, at Mile Post _____, [Project # _____], as described or depicted on **Exhibit "A-1"** attached hereto and made a part hereof (the "**Premises**").

B. Grantor and Grantee have entered into that certain Overpass Agreement dated as of _____ concerning improvements on or near the Premises (the "**Overpass Agreement**").

C. Grantee has requested that Grantor grant to Grantee an easement over the Premises for the Easement Purpose (as defined below).

D. Grantor has agreed to grant Grantee such easement, subject to the terms and conditions set forth in this Easement Agreement.

NOW, THEREFORE, for and in consideration of the foregoing recitals which are incorporated herein, the mutual promises contained herein, and other good and valuable consideration, the receipt and sufficiency of which are hereby acknowledged, the parties agree as follows:

Section 1 Granting of Easement.

1.1 Easement Purpose. The "**Easement Purpose**" shall be for the purposes set forth in the OVERPASS Agreement. Any improvements to be constructed in connection with the Easement Purpose are referred to herein as "**Improvements**" and shall be constructed, located, configured and maintained by Grantee in strict accordance with the terms of this Easement Agreement and the OVERPASS Agreement.

1.2 Grant. Grantor does hereby grant unto Grantee a non-exclusive easement ("**Easement**") over the Premises for the Easement Purpose and for no other purpose. The Easement is granted subject to any and all restrictions, covenants, easements, licenses, permits, leases and other encumbrances of whatsoever nature whether or not of record, if any, relating to the Premises and subject to all with all applicable federal, state and local laws, regulations, ordinances, restrictions, covenants and court or administrative decisions and orders, including Environmental Laws (defined below) and zoning laws (collectively, "**Laws**"). Grantor may not make any alterations or improvements or perform any maintenance or repair activities within the Premises except in accordance with the terms and conditions of the OVERPASS Agreement.

1.3 Reservations by Grantor. Grantor excepts and reserves the right, to be exercised by Grantor and any other parties who may obtain written permission or authority from Grantor:

(a) to install, construct, maintain, renew, repair, replace, use, operate, change, modify and relocate any existing pipe, power, communication, cable, or utility lines and appurtenances and other facilities or structures of like character (collectively, "**Lines**") upon, over, under or across the Premises;

(b) to install, construct, maintain, renew, repair, replace, use, operate, change, modify and relocate any tracks or additional facilities or structures upon, over, under or across the Premises; and

(c) to use the Premises in any manner as the Grantor in its sole discretion deems appropriate, provided Grantor uses all commercially reasonable efforts to avoid material interference with the use of the Premises by Grantee for the Easement Purpose.

Section 2 **Term of Easement**. The term of the Easement, unless sooner terminated under provisions of this Easement Agreement, shall be perpetual.

Section 3 **No Warranty of Any Conditions of the Premises.** Grantee acknowledges that Grantor has made no representation whatsoever to Grantee concerning the state or condition of the Premises, or any personal property located thereon, or the nature or extent of Grantor's ownership interest in the Premises. Grantee has not relied on any statement or declaration of Grantor, oral or in writing, as an inducement to entering into this Easement Agreement, other than as set forth herein. GRANTOR HEREBY DISCLAIMS ANY REPRESENTATION OR WARRANTY, WHETHER EXPRESS OR IMPLIED, AS TO THE DESIGN OR CONDITION OF ANY PROPERTY PRESENT ON OR CONSTITUTING THE PREMISES, ITS MERCHANTABILITY OR FITNESS FOR ANY PARTICULAR PURPOSE, THE QUALITY OF THE MATERIAL OR WORKMANSHIP OF ANY SUCH PROPERTY, OR THE CONFORMITY OF ANY SUCH PROPERTY TO ITS INTENDED USES. GRANTOR SHALL NOT BE RESPONSIBLE TO GRANTEE OR ANY OF GRANTEE'S CONTRACTORS FOR ANY DAMAGES RELATING TO THE DESIGN, CONDITION, QUALITY, SAFETY, MERCHANTABILITY OR FITNESS FOR ANY PARTICULAR PURPOSE OF ANY PROPERTY PRESENT ON OR CONSTITUTING THE PREMISES, OR THE CONFORMITY OF ANY SUCH PROPERTY TO ITS INTENDED USES. GRANTEE ACCEPTS ALL RIGHTS GRANTED UNDER THIS EASEMENT AGREEMENT IN THE PREMISES IN AN "AS IS, WHERE IS" AND "WITH ALL FAULTS" CONDITION, AND SUBJECT TO ALL LIMITATIONS ON GRANTOR'S RIGHTS, INTERESTS AND TITLE TO THE PREMISES. Grantee has inspected or will inspect the Premises, and enters upon Grantor's rail corridor and property with knowledge of its physical condition and the danger inherent in Grantor's rail operations on or near the Premises. Grantee acknowledges that this Easement Agreement does not contain any implied warranties that Grantee or Grantee's Contractors (as hereinafter defined) can successfully construct or operate the Improvements.

Section 4 **Nature of Grantor's Interest in the Premises.** GRANTOR DOES NOT WARRANT ITS TITLE TO THE PREMISES NOR UNDERTAKE TO DEFEND GRANTEE IN THE PEACEABLE POSSESSION OR USE THEREOF. NO COVENANT OF QUIET ENJOYMENT IS MADE. In case of the eviction of Grantee by anyone owning or claiming title to or any interest in the Premises, or by the abandonment by Grantor of the affected rail corridor, Grantor shall not be liable to refund Grantee any compensation paid hereunder.

Section 5 **Improvements.** Grantee shall take, in a timely manner, all actions necessary and proper to the lawful establishment, construction, operation, and maintenance of the Improvements, including such actions as may be necessary to obtain any required permits, approvals or authorizations from applicable governmental authorities. Any and all cuts and fills, excavations or embankments necessary in the construction, maintenance, or future alteration of the Improvements shall be made and maintained in such manner, form and extent as will provide adequate drainage of and from the adjoining lands and premises of the Grantor; and wherever any such fill or embankment shall or may obstruct the natural and pre-existing drainage from such lands and premises of the Grantor, the Grantee shall construct and maintain such culverts or drains as may be requisite to preserve such natural and pre-existing drainage, and shall also wherever necessary, construct extensions of existing drains, culverts or ditches through or along the premises of the Grantor, such extensions to be of adequate sectional dimensions to preserve the present flowage of drainage or other waters, and of materials and workmanship equally as good as those now existing. In the event any construction, repair, maintenance, work or other use of the Premises by Grantee will affect any Lines, fences, buildings, improvements or other facilities (collectively, "**Other Improvements**"), Grantee will be responsible at Grantee's sole risk to locate and make any adjustments necessary to such Other Improvements. Grantee must contact the owner(s) of the Other Improvements notifying them of any work that may damage these Other Improvements and/or interfere with their service and obtain the owner's written approval prior to so affecting the Other Improvements. Grantee must mark all Other Improvements on the Plans and Specifications and mark such Other Improvements in the field in order to verify their locations. Grantee must also use all reasonable methods when working on or near Grantor

property to determine if any Other Improvements (fiber optic, cable, communication or otherwise) may exist. The Grantee agrees to keep the above-described premises free and clear from combustible materials and to cut and remove or cause to be cut and removed at its sole expense all weeds and vegetation on said premises, said work of cutting and removal to be done at such times and with such frequency as to comply with Grantee and local laws and regulations and abate any and all hazard of fire.

Section 6 **Taxes and Recording Fees**. Grantee shall pay when due any taxes, assessments or other charges (collectively, "**Taxes**") levied or assessed upon the Improvements by any governmental or quasi-governmental body or any Taxes levied or assessed against Grantor or the Premises that are attributable to the Improvements. Grantee agrees to purchase, affix and cancel any and all documentary stamps in the amount prescribed by statute, and to pay any and all required transfer taxes, excise taxes and any and all fees incidental to recordation of the Memorandum of Easement. In the event of Grantee's failure to do so, if Grantor shall become obligated to do so, Grantee shall be liable for all costs, expenses and judgments to or against Grantor, including all of Grantor's legal fees and expenses.

Section 7 **Environmental.**

7.1 Compliance with Environmental Laws. Grantee shall strictly comply with all federal, state and local environmental Laws in its use of the Premises, including, but not limited to, the Resource Conservation and Recovery Act, as amended (RCRA), the Clean Water Act, the Oil Pollution Act, the Hazardous Materials Transportation Act, the Comprehensive Environmental Response, Compensation and Liability Act (CERCLA) and the Toxic Substances Control Act (collectively referred to as the "**Environmental Laws**"). Grantee shall not maintain a "treatment," "storage," "transfer" or "disposal" facility, or "underground storage tank," as those terms are defined by Environmental Laws, on the Premises. Grantee shall not handle, transport, release or suffer the release of "hazardous waste" or "hazardous substances", as "hazardous waste" and "hazardous substances" may now or in the future be defined by any Environmental Laws.

7.2 Notice of Release. Grantee shall give Grantor immediate notice to Grantor's Resource Operations Center at (800) 832-5452 of any release of hazardous substances on or from the Premises, violation of Environmental Laws, or inspection or inquiry by governmental authorities charged with enforcing Environmental Laws with respect to Grantee's use of the Premises. Grantee shall use its best efforts to promptly respond to any release on or from the Premises. Grantee also shall give Grantor immediate notice of all measures undertaken on behalf of Grantee to investigate, remediate, respond to or otherwise cure such release or violation.

7.3 Remediation of Release. In the event that Grantor has notice from Grantee or otherwise of a release or violation of Environmental Laws which occurred or may occur during the term of this Easement Agreement, Grantor may require Grantee, at Grantee's sole risk and expense, to take timely measures to investigate, remediate, respond to or otherwise cure such release or violation affecting the Premises. If during the construction or subsequent maintenance of the Improvements, soils or other materials considered to be environmentally contaminated are exposed, Grantee will remove and safely dispose of said contaminated soils. Determination of soils contamination and applicable disposal procedures thereof, will be made only by an agency having the capacity and authority to make such a determination.

7.4 Preventative Measures. Grantee shall promptly report to Grantor in writing any conditions or activities upon the Premises known to Grantee which create a risk of harm to persons, property or the environment and shall take whatever action is necessary to prevent injury to persons or property arising out of such conditions or activities; provided, however, that Grantee's reporting to Grantor shall not relieve Grantee of any obligation whatsoever imposed on it by this Easement Agreement. Grantee shall promptly respond to Grantor's request for information regarding said conditions or activities.

7.5 Evidence of Compliance. Grantee agrees periodically to furnish Grantor with proof satisfactory to Grantor that Grantee is in compliance with this **Section 7**. Should Grantee not comply fully with the above-stated obligations of this **Section 7**, notwithstanding anything contained in any other provision hereof, Grantor may, at its option, terminate this Easement Agreement by serving five (5) days' notice of termination upon Grantee. Upon termination, Grantee shall remove the Improvements and restore the Premises as provided in **Section 9**.

Section 8 **Default and Termination**.

8.1 Grantor's Performance Rights. If at any time Grantee, or Grantee's Contractors, fails to properly perform its obligations under this Easement Agreement, Grantor, in its sole discretion, may: (i) seek specific performance of the unperformed obligations, or (ii) at Grantee's sole cost, may arrange for the performance of such work as Grantor deems necessary for the safety of its rail operations, activities and property, or to avoid or remove any interference with the activities or property of Grantor, or anyone or anything present on the rail corridor or property with the authority or permission of Grantor. Grantee shall promptly reimburse Grantor for all costs of work performed on Grantee's behalf upon receipt of an invoice for such costs. Grantor's failure to perform any obligations of Grantee or Grantee's Contractors shall not alter the liability allocation set forth in this Easement Agreement.

8.2 Abandonment. Grantor may, at its option, terminate this Easement Agreement by serving five (5) days' notice in writing upon Grantee if Grantee should abandon or cease to use the Premises for the Easement Purpose. Any waiver by Grantor of any default or defaults shall not constitute a waiver of the right to terminate this Easement Agreement for any subsequent default or defaults, nor shall any such waiver in any way affect Grantor's ability to enforce any section of this Easement Agreement.

8.3 Effect of Termination or Expiration. Neither termination nor expiration will release Grantee from any liability or obligation under this Easement, whether of indemnity or otherwise, resulting from any acts, omissions or events happening prior to the date of termination or expiration, or, if later, the date the Premises are restored as required by **Section 9**.

8.4 Non-exclusive Remedies. The remedies set forth in this **Section 8** shall be in addition to, and not in limitation of, any other remedies that Grantor may have under the OVERPASS Agreement, at law or in equity.

Section 9 Surrender of Premises.

9.1 Removal of Improvements and Restoration. Upon termination of this Easement Agreement, whether by abandonment of the Easement or by the exercise of Grantor's termination rights hereunder, Grantee shall, at its sole cost and expense, immediately perform **the following:**

(a) remove all or such portion of Grantee's Improvements and all appurtenances thereto from the Premises, as Grantor directs at Grantor's sole discretion;

(b) repair and restore any damage to the Premises arising from, growing out of, or connected with Grantee's use of the Premises;

(c) remedy any unsafe conditions on the Premises created or aggravated by Grantee; and

(d) leave the Premises in the condition which existed as of the Effective Date.

9.2 Limited License for Entry. If this Easement Agreement is terminated, Grantor may direct Grantee to undertake one or more of the actions set forth above, at Grantee's sole cost, in which case Grantee shall have a limited license to enter upon the Premises to the extent necessary to undertake the actions directed by Grantor. The terms of this limited license include all of Grantee's obligations under this Easement Agreement. Termination will not release Grantee from any liability or obligation under this Easement Agreement, whether of indemnity or otherwise, resulting from any acts, omissions or events happening prior to the date of termination, or, if later, the date when Grantee's Improvements are removed and the Premises are restored to the condition that existed as of the Effective Date. If Grantee fails to surrender the Premises to Grantor upon any termination of the Easement, all liabilities and obligations of Grantee hereunder shall continue in effect until the Premises are surrendered.

Section 10 **Liens**. Grantee shall promptly pay and discharge any and all liens arising out of any

construction, alterations or repairs done, suffered or permitted to be done by Grantee on the Premises or attributable to Taxes that are the responsibility of Grantee pursuant to **Section 6**. Grantor is hereby authorized to post any notices or take any other action upon or with respect to the Premises that is or may be permitted by Law to prevent the attachment of any such liens to any portion of the Premises; provided, however, that failure of Grantor to take any such action shall not relieve Grantee of any obligation or liability under this **Section 10** or any other section of this Easement Agreement.

Section 11 **Tax Exchange**. Grantor reserves the right to assign this Easement Agreement to Apex Property & Track Exchange, Inc. ("**Apex**"). Apex is a qualified intermediary within the meaning of Section 1031 of the Internal Revenue Code of 1986, as amended, and Treas. Reg. § 1.1031(k)-1(g), for the purpose of completing a tax-deferred exchange under said Section 1031. Grantor shall bear all expenses associated with the use of Apex, or necessary to qualify this transaction as a tax-deferred exchange, and, except as otherwise provided herein, shall protect, reimburse, indemnify and hold harmless Grantee from and against any and all reasonable and necessary additional costs, expenses, including, attorneys fees, and liabilities which Grantee may incur as a result of Grantor's use of Apex or the qualification of this transaction as a tax-deferred transaction pursuant to Section 1031. Grantee shall cooperate with Grantor with respect to this tax-deferred exchange, and upon Grantor's request, shall execute such documents as may be required to effect this tax-deferred exchange.

Section 12 **Notices**. Any notice required or permitted to be given hereunder by one party to the other shall be delivered in the manner set forth in the OVERPASS Agreement. Notices to Grantor under this Easement shall be delivered to the following address: BNSF Railway Company, Real Estate Department, 2500 Lou Menk Drive, Ft. Worth, TX 76131, Attn: Permits, or such other address as Grantor may from time to time direct by notice to Grantee.

Section 13 **Recordation**. It is understood and agreed that this Easement Agreement shall not be in recordable form and shall not be placed on public record and any such recording shall be a breach of this Easement Agreement. Grantor and Grantee shall execute a Memorandum of Easement in the form attached hereto as **Exhibit "B-1"** (the "**Memorandum of Easement**") subject to changes required, if any, to conform such form to local recording requirements. [*IF LEGAL DESCRIPTION IS NOT AVAILABLE USE THE FOLLOWING IN PLACE OF THE PRIOR SENTENCE: As of the Effective Date, a legal description of the Premises is not available. Grantee and Grantor shall work together in good faith to establish the legal description for the Premises. Once Grantor and Grantee have approved the legal description, Grantor and Grantee shall execute a Memorandum of Easement in the form attached hereto as* ***Exhibit "B-1"*** *(the "**Memorandum of Easement**").]* The Memorandum of Easement shall be recorded in the real estate records in the county where the Premises are located. If a Memorandum of Easement is not executed by the parties and recorded as described above within ____ days of the Effective Date, Grantor shall have the right to terminate this Easement Agreement upon notice to Grantee.

Section 14 **Miscellaneous**.

14.1 All questions concerning the interpretation or application of provisions of this Easement Agreement shall be decided according to the substantive Laws of the State of **[Texas]** without regard to conflicts of law provisions.

14.2 In the event that Grantee consists of two or more parties, all the covenants and agreements of Grantee herein contained shall be the joint and several covenants and agreements of such parties. This instrument and all of the terms, covenants and provisions hereof shall inure to the benefit of and be binding upon each of the parties hereto and their respective legal representatives, successors and assigns and shall run with and be binding upon the Premises.

14.3 If any action at law or in equity is necessary to enforce or interpret the terms of this Easement Agreement, the prevailing party or parties shall be entitled to reasonable attorneys' fees, costs and necessary disbursements in addition to any other relief to which such party or parties may be entitled.

14.4 If any provision of this Easement Agreement is held to be illegal, invalid or unenforceable under present or future Laws, such provision will be fully severable and this Easement Agreement will be construed

and enforced as if such illegal, invalid or unenforceable provision is not a part hereof, and the remaining provisions hereof will remain in full force and effect. In lieu of any illegal, invalid or unenforceable provision herein, there will be added automatically as a part of this Easement Agreement a provision as similar in its terms to such illegal, invalid or unenforceable provision as may be possible and be legal, valid and enforceable.

14.5 This Easement Agreement is the full and complete agreement between Grantor and Grantee with respect to all matters relating to Grantee's use of the Premises, and supersedes any and all other agreements between the parties hereto relating to Grantee's use of the Premises as described herein. However, nothing herein is intended to terminate any surviving obligation of Grantee or Grantee's obligation to defend and hold Grantor harmless in any prior written agreement between the parties.

14.6 Time is of the essence for the performance of this Easement Agreement.

14.7 The terms of the OVERPASS Agreement are incorporated herein as if fully set forth in this instrument which terms shall be in full force and effect for purposes of this Easement even if the OVERPASS Agreement is, for whatever reason, no longer in effect.

[Signature page follows]

Witness the execution of this Easement Agreement as of the date first set forth above.

GRANTOR:

BNSF RAILWAY COMPANY, a Delaware corporation

By: _____
Name: _____
Title: _____

GRANTEE:

City of Torrance, CA,
a municipal corporation

By: _____

Name: Frank Scotto

Title: Mayor

ATTEST:

_____
Sue Herbers, City Clerk

APPROVED AS TO FORM AND CONTENT

JOHN L. FELLOWS III
City Attorney

By_____

Deputy City Attorney

EXHIBIT "A-1"

Premises

EXHIBIT "D-1" Map BNSF Easements

LINE TABLE		
LINE	BEARING	LENGTH
L1	S89°57'55"E	54.42'
L2	S48°00'00"E	5.84'
L3	S89°57'55"E	22.43'
L4	N89°59'51"W	7.47'
L5	S48°00'00"E	7.42'

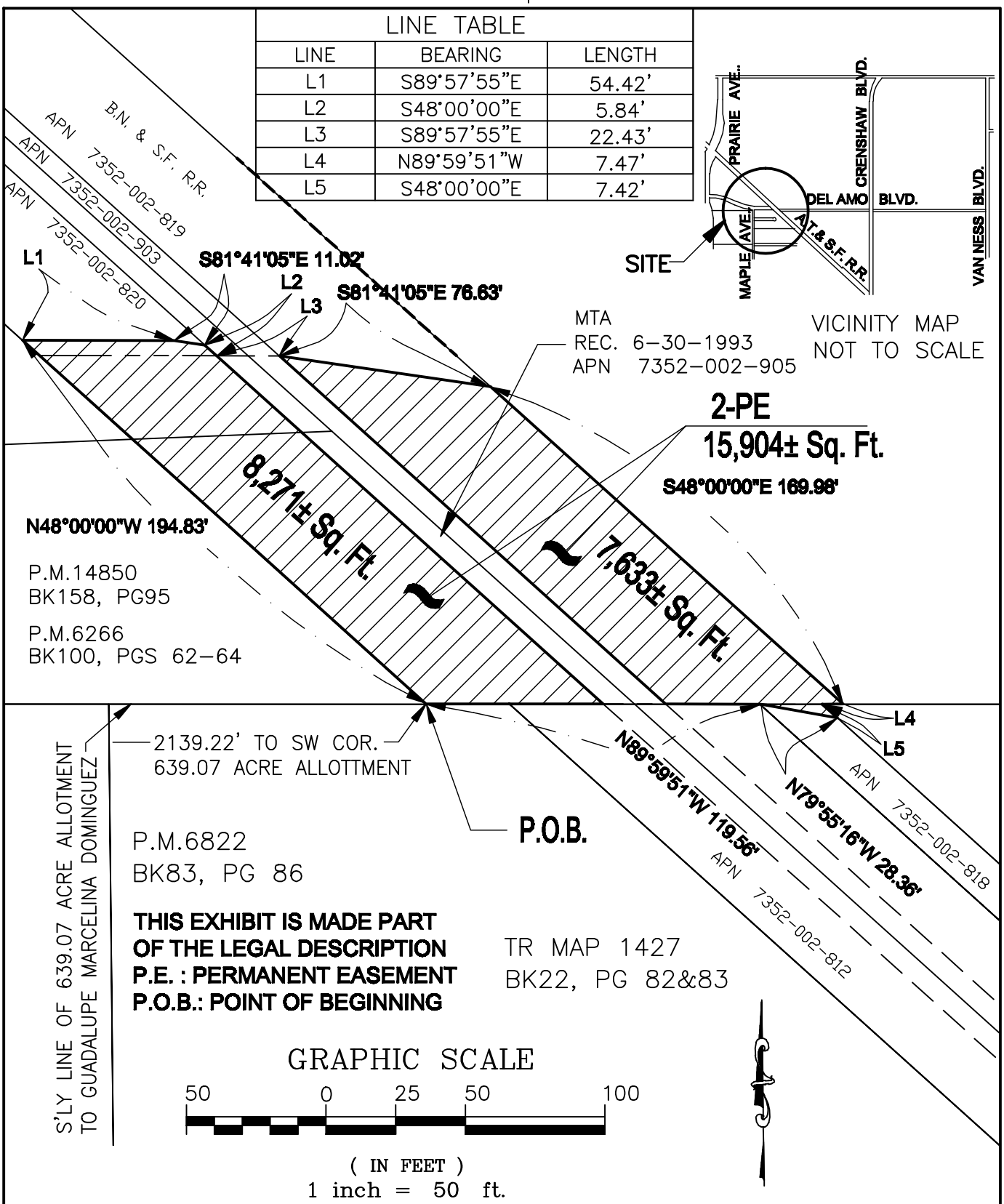

VICINITY MAP
NOT TO SCALE

THIS EXHIBIT IS MADE PART OF THE LEGAL DESCRIPTION
P.E. : PERMANENT EASEMENT
P.O.B.: POINT OF BEGINNING

DEL AMO BOULEVARD EXTENSION **CITY OF TORRANCE**		**OWNER NAME : B.N. & S.F. R.R.** **APN 7352-002-818,7302-052-819,7352-002-820**	**DATE: 02-03-09**
Paragon Partners Ltd. 5762 Bolsa Avenue, Ste. 201 Huntington Beach, CA 92649	CHECKED _____DATE	**CITY OF TORRANCE** **POR. 639.07 ACRE ALLOTMENT MADE TO** **GUADALUPE MARCELINA DOMINGUEZ** **COUNTY OF LOS ANGELES**	**SCALE: AS SHOWN** **DRAWN BY: MAT** **REV. DATE:7/26/6** **REV. No2**

PORTION OF APN. 7352-002-818, 819, 820

PARCEL 2-P.E.
PERMANENT BRIDGE EASEMENT

THAT PORTION OF THE 639.07 ACRE ALLOTMENT MADE TO GUADALUPE MARCELINA DOMINGUEZ BY THE DECREE OF PARTITION OF A PORTION OF THE RANCHO SAN PEDRO, IN CASE No. 3284 OF THE SUPERIOR COURT OF THE STATE OF CALIFORNIA IN AND FOR THE COUNTY OF LOS ANGELES, DESCRIBED AS PARCEL No.16 OF THAT CERTAIN DEED TO SANTA FE AND LOS ANGELES HARBOR RAILWAY COMPANY, RECORDED DECEMBER 26, 1924 IN BOOK 3817, PAGE 164, OFFICIAL RECORDS, BOUNDED AND DESCRIBED AS FOLLOWS:

BEGINNING AT A POINT ON THE SOUTHERLY LINE OF SAID ALLOTMENT, DISTANT 2139.22 FEET EASTERLY ALONG SAID SOUTHERLY LINE FROM THE SOUTHWEST CORNER THEREOF; THENCE NORTH 48°00'00" WEST 194.83 FEET ALONG A LINE PARALLEL WITH AND 50.00 FEET SOUTHWESTERLY FROM SAID CERTAIN LOCATED CENTER LINE OF SAID SANTA FE AND LOS ANGELES HARBOR RAILWAY COMPANY DESCRIBED IN SAID DEED; THENCE SOUTH 89°57'55" EAST, 54.42 FEET, THENCE SOUTH 81°41'05" EAST, 11.02 FEET TO A LINE PARALLEL WITH AND 7.50 FEET SOUTHWESTERLY FROM SAID LOCATED CENTER LINE; THENCE ALONG SAID PARALLEL LINE SOUTH 48°00'00" EAST, 5.84 FEET; THENCE SOUTH 89°57'55" EAST, 22.43 FEET; THENCE SOUTH 81°41'05" EAST 76.63 FEET TO A LINE PARALLEL WITH AND 50.00 FEET NORTHEASTERLY FROM SAID LOCATED CENTER LINE; THENCE ALONG SAID PARALLEL LINE SOUTH 48°00'00" EAST, 169.98 FEET TO A POINT ON THE SOUTHERLY LINE OF SAID ALLOTMENT; THENCE ALONG SAID LINE NORTH 89°59'51" WEST, 7.47 FEET TO THE NORTHEASTERLY BOUNDARY OF THAT CERTAIN 15.00 FOOT WIDE PARCEL OF LAND DEEDED BY CHANSLOR-CANFIELD MIDWAY OIL COMPANY TO THE ATCHISON , TOPEKA AND SANTA FE RAIL COMPANY FOR RIGHT OF WAY PURPOSES BY DEED DATED AUGUST 2,1948 AND RECORDED IN BOOK 28452, PAGE 315 OF OFFICIAL RECORDS OF SAID COUNTY ; THENCE ALONG SAID LAST MENTIONED NORTHEASTERLY BOUNDARY SOUTH 48°00'00" EAST, 7.42 FEET; THENCE NORTH 79°55'16" WEST, 28.36 FEET TO A POINT ON THE SOUTHERLY LINE OF SAID ALLOTMENT ; THENCE ALONG SAID LINE NORTH 89°59'51" WEST, 119.56 FEET TO THE **POINT OF BEGINNING**.

EXCEPTING THEREFROM THAT PORTION OF SAID 639.07 ACRE ALLOTMENT GRANTED TO LOS ANGELES COUNTY METROPOLITAN TRANSPORTATION AUTHORITY, BEING A 15 FOOT WIDE STRIP OF LAND, LYING 7.5 FEET ON EACH SIDE, MEASURED FROM SAID CENTERLINE OF THE SANTA FE AND LOS ANGELES HARBOR RAILWAY COMPANY'S MAIN TRACK REFERRED ABOVE.

CONTAINING 15,904.0 SQUARE FEET OR 0.355 ACRES MORE OR LESS.

SEE EXHIBIT "D-1" MAP ATTACHED HERETO AND BY REFERENCE MADE A PART HEREOF.

Prepared by
Paragon Partners Ltd.
5762 Bolsa Ave., Suite 201
Huntington Beach, CA 92649
714-379-3376

James M. Rushing 2-25-09
James M. Rushing Date
R.C.E. 28219 Exp. 03/31/10

REGISTERED PROFESSIONAL ENGINEER
JAMES MACLYN RUSHING
No. C28219
Exp. 3-31-10
CIVIL
STATE OF CALIFORNIA

EXHIBIT "B-1"

Memorandum of Easement

THIS MEMORANDUM OF EASEMENT is hereby executed this ___ day of _____, 20___, by and between BNSF RAILWAY COMPANY, a Delaware corporation ("**Grantor**"), whose address for purposes of this instrument is 2500 Lou Menk Drive, Fort Worth, Texas 76131, and the City of Torrance,a municipal corporation ("**Grantee**"), whose address for purposes of this instrument is _____, which terms "Grantor" and "Grantee" shall include, wherever the context permits or requires, singular or plural, and the heirs, legal representatives, successors and assigns of the respective parties:

WITNESSETH:

WHEREAS, Grantor owns or controls certain real property situated in Los Angeles County, California as described on **Exhibit "A-1"** attached hereto and incorporated herein by reference (the "**Premises**');

WHEREAS, Grantor and Grantee entered into an Easement Agreement, dated _____ (the "**Easement Agreement**") which set forth, among other things, the terms of an easement granted by Grantor to Grantee over and across the Premises (the "**Easement**"); and

WHEREAS, Grantor and Grantee desire to memorialize the terms and conditions of the Easement Agreement of record.

For valuable consideration the receipt and sufficiency of which are hereby acknowledged, Grantor does grant unto Grantee and Grantee does hereby accept from Grantor the Easement over and across the Premises.

The term of the Easement, unless sooner terminated under provisions of the Easement Agreement, shall be perpetual. Provisions regulating the use and purposes to which the Easement shall be limited, are set forth in detail in the Easement Agreement and Grantor and Grantee agree to abide by the terms of the Easement Agreement.

All the terms, conditions, provisions and covenants of the Easement Agreement are incorporated herein by this reference for all purposes as though written out at length herein, and both the Easement Agreement and this Memorandum of Easement shall be deemed to constitute a single instrument or document. This Memorandum of Easement is not intended to amend, modify, supplement, or supersede any of the provisions of the Easement Agreement and, to the extent there may be any conflict or inconsistency between the Easement Agreement or this Memorandum of Easement, the Easement Agreement shall control.

[Signature page follows]

IN WITNESS WHEREOF, Grantor and Grantee have executed this Memorandum of Easement to as of the date and year first above written.

GRANTOR:

BNSF RAILWAY COMPANY, a Delaware corporation

By: _____
Name: _____
Title: _____

GRANTEE:
City of Torrance, California,
a municipal corporation

By: _____
Name: Frank Scotto
Title: Mayor

ATTEST:

_____
Sue Herbers, City Clerk

APPROVED AS TO FORM AND CONTENT

JOHN L. FELLOWS III
City Attorney

By_____
Deputy City Attorney

STATE OF _____ §
§
COUNTY OF _____ §

This instrument was acknowledged before me on the ___ day of _____, 200__, by _____ _____(name) as _____(title) of BNSF RAILWAY COMPANY, a Delaware corporation.

_____
Notary Public

(Seal)

My appointment expires:_____

STATE OF _____ §
§
COUNTY OF _____ §

Form Approved by VP-Law

This instrument was acknowledged before me on the ___ day of _____, 200__, by _____ _____(name) as _____(title) of _____, a _____.

_____
Notary Public

(Seal)

My appointment expires:_____

Exhibit "B-1"

Exhibit C

EXHIBIT "C"
CONTRACTOR REQUIREMENTS

1.01 General

- **1.01.01** The Contractor must cooperate with **BNSF RAILWAY COMPANY**, hereinafter referred to as "Railway" where work is over or under on or adjacent to Railway property and/or right-of-way, hereafter referred to as "Railway Property", during the construction of Del Amo Grade Separation Project in Torrance, CA off of BNSF Railway's Harbor Subdivision.

- **1.01.02** The Contractor must execute and deliver to the Railway duplicate copies of the Exhibit "C-1" Agreement, in the form attached hereto, obligating the Contractor to provide and maintain in full force and effect the insurance called for under Section 3 of said Exhibit "C-1". Questions regarding procurement of the Railroad Protective Liability Insurance should be directed to Rosa Martinez at Marsh, USA, 214-303-8519.

- **1.01.03** The Contractor must plan, schedule and conduct all work activities so as not to interfere with the movement of any trains on Railway Property.

- **1.01.04** The Contractor's right to enter Railway's Property is subject to the absolute right of Railway to cause the Contractor's work on Railway's Property to cease if, in the opinion of Railway, Contractor's activities create a hazard to Railway's Property, employees, and/or operations. Railway will have the right to stop construction work on the Project if any of the following events take place: (i) Contractor (or any of its subcontractors) performs the Project work in a manner contrary to the plans and specifications approved by Railway; (ii) Contractor (or any of its subcontractors), in Railway's opinion, prosecutes the Project work in a manner which is hazardous to Railway property, facilities or the safe and expeditious movement of railroad traffic; (iii) the insurance described in the attached Exhibit C-1 is canceled during the course of the Project; or (iv) Contractor fails to pay Railway for the Temporary Construction License or the Easement. The work stoppage will continue until all necessary actions are taken by Contractor or its subcontractor to rectify the situation to the satisfaction of Railway's Division Engineer or until additional insurance has been delivered to and accepted by Railway. In the event of a breach of (i) this Agreement, (ii) the Temporary Construction License, or (iii) the Easement, Railway may immediately terminate the Temporary Construction License or the Easement. Any such work stoppage under this provision will not give rise to any liability on the part of Railway. Railway's right to stop the work is in addition to any other rights Railway may have including, but not limited to, actions or suits for damages or lost profits. In the event that Railway desires to stop construction work on the Project, Railway agrees to immediately notify the following individual in writing:

  City of Torrance
  Public Works Department
  20500 Madrona Avenue
  Torrance, CA 90503
  Attn: Craig Bilezerian, Engineering Manager

- **1.01.05** The Contractor is responsible for determining and complying with all Federal, State and Local Governmental laws and regulations, including, but not limited to environmental laws and regulations (including but not limited to the Resource Conservation and Recovery Act, as amended; the Clean Water Act, the Oil Pollution Act, the Hazardous Materials Transportation Act, CERCLA), and health and safety laws and regulations. The Contractor hereby indemnifies, defends and holds harmless Railway for, from and against all fines or penalties imposed or assessed by Federal, State and Local Governmental Agencies against the Railway which arise out of Contractor's work under this Agreement.

- **1.01.06** The Contractor must notify the City of Torrance at _____ and Railway's Manager Public Projects, telephone number (909) 386-4472 at least thirty (30) calendar days before commencing any work on Railway Property. Contractors notification to Railway, must refer to Railroad's file 924652S.

- **1.01.07** For any bridge demolition and/or falsework above any tracks or any excavations located with any part of the excavations located within, whichever is greater, twenty-five (25) feet of the nearest track or intersecting a slope from the plane of the top of rail on a 2 horizontal to 1 vertical slope beginning at eleven (11) feet from centerline of the nearest track, both measured perpendicular to center line of track, the Contractor must furnish the Railway five sets of working drawings showing details of construction affecting Railway Property and tracks. The working drawing must include the proposed method of installation and removal of falsework, shoring or cribbing, not included in the contract plans and two sets of structural calculations of any falsework, shoring or cribbing. For all excavation and shoring submittal plans, the current "BNSF-UPRR Guidelines for Temporary Shoring" must be used for determining the design loading conditions to be used in shoring design, and all calculations and submittals must be in accordance with the current "BNSF-UPRR Guidelines for Temporary Shoring". All submittal drawings and calculations must be stamped by a registered professional engineer licensed to practice in the state the project is located. All calculations must take into consideration railway surcharge loading and must be designed to meet American Railway Engineering and Maintenance-of-Way Association (previously known as American Railway Engineering Association) Coopers E-80 live loading standard. All drawings and calculations must be stamped by a registered professional engineer licensed to practice in the state the project is located. The Contractor must not begin work until notified by the Railway that plans have been approved. The Contractor will be required to use lifting devices such as, cranes and/or winches to place or to remove any falsework over Railway's tracks. In no case will the Contractor be relieved of responsibility for results obtained by the implementation of said approved plans.

- **1.01.08** Subject to the movement of Railway's trains, Railway will cooperate with the Contractor such that the work may be handled and performed in an efficient manner. The Contractor will have no claim whatsoever for any type of damages or for extra or additional compensation in the event his work is delayed by the Railway.

1.02 Contractor Safety Orientation

- **1.02.01 No employee of the Contractor, its subcontractors, agents or invitees may enter Railway Property without first having completed Railway's Engineering Contractor Safety Orientation, found on the web site www.contractororientation.com. The Contractor must ensure that each of its employees, subcontractors, agents or invitees completes Railway's Engineering Contractor Safety Orientation through internet sessions before any work is performed on the Project. Additionally, the Contractor must ensure that each and every one of its employees, subcontractors, agents or invitees possesses a card certifying completion of the Railway Contractor Safety Orientation before entering Railway Property. The Contractor is responsible for the cost of the Railway Contractor Safety Orientation. The Contractor must renew the Railway Contractor Safety Orientation annually. Further clarification can be found on the web site or from the Railway's Representative.**

1.03 Railway Requirements

- **1.03.01** The Contractor must take protective measures as are necessary to keep railway facilities, including track ballast, free of sand, debris, and other foreign objects and materials resulting from his operations. Any damage to railway facilities resulting from Contractor's operations will be repaired or replaced by Railway and the cost of such repairs or replacement must be paid for by the Agency.

- **1.03.02** The Contractor must notify the Railway's Division Superintendent _____ at (_____)_____ and provide blasting plans to the Railway for review seven (7) calendar days prior to conducting any blasting operations adjacent to or on Railway's Property.

- **1.03.03** The Contractor must abide by the following temporary clearances during construction:

  - 15' Horizontally from centerline of nearest track
  - 21'-6" Vertically above top of rail
  - 27'-0" Vertically above top of rail for electric wires carrying less than 750 volts
  - 28'-0" Vertically above top of rail for electric wires carrying 750 volts to 15,000 volts
  - 30'-0" Vertically above top of rail for electric wires carrying 15,000 volts to 20,000 volts
  - 34'-0" Vertically above top of rail for electric wires carrying more than 20,000 volts

- **1.03.04** Upon completion of construction, the following clearances shall be maintained: **[Note to Drafter: The vertical clearance should mirror the final negotiated design clearance]**

  - 25' Horizontally from centerline of nearest track
  - 23'-3 ½" Vertically above top of rail

- **1.03.05** Any infringement within State statutory clearances due to the Contractor's operations must be submitted to the Railway and to the City of Torrance and must not be undertaken until approved in writing by the Railway, and until the City of Torrance has obtained any necessary authorization from the State Regulatory Authority for the infringement. No extra compensation will be allowed in the event the Contractor's work is delayed pending Railway approval, and/or the State Regulatory Authority's approval.

- **1.03.06** In the case of impaired vertical clearance above top of rail, Railway will have the option of installing tell-tales or other protective devices Railway deems necessary for protection of Railway operations. The cost of tell-tales or protective devices will be borne by the Agency.

- **1.03.07** The details of construction affecting the Railway's Property and tracks not included in the contract plans must be submitted to the Railway by City of Torrance for approval before work is undertaken and this work must not be undertaken until approved by the Railway.

- **1.03.08** At other than public road crossings, the Contractor must not move any equipment or materials across Railway's tracks until permission has been obtained from the Railway. The Contractor must obtain a "Temporary Construction Crossing Agreement" from the Railway prior to moving his equipment or materials across the Railways tracks. The temporary crossing must be gated and locked at all times when not required for use by the Contractor. The temporary crossing for use of the Contractor will be constructed and, at the completion of the project, removed at the expense of the Contractor.

- **1.03.09** Discharge, release or spill on the Railway Property of any hazardous substances, oil, petroleum, constituents, pollutants, contaminants, or any hazardous waste is prohibited and Contractor must immediately notify the Railway's Resource Operations Center at 1(800) 832-5452, of any discharge, release or spills in excess of a reportable quantity. Contractor must not allow Railway Property to become a treatment, storage or transfer facility as those terms are defined in the Resource Conservation and Recovery Act or any state analogue.

- **1.03.10** The Contractor upon completion of the work covered by this contract, must promptly remove from the Railway's Property all of Contractor's tools, equipment, implements and other materials, whether brought upon said property by said Contractor or any Subcontractor, employee or agent of Contractor or of any Subcontractor, and must cause Railway's Property to be left in a condition acceptable to the Railway's representative.

1.04 Contractor Roadway Worker on Track Safety Program and Safety Action Plan

- 1.04.01 Each Contractor that will perform work within 25 feet of the centerline of a track must develop and implement a Roadway Worker Protection/On Track Safety Program and work with Railway Project Representative to develop an on track safety strategy as described in the guidelines listed in the on track safety portion of the Safety Orientation. This Program must provide Roadway Worker protection/on track training for all employees of the Contractor, its subcontractors, agents or invitees. This training is reinforced at the job site through job safety briefings. Additionally, each Contractor must develop and implement the Safety Action Plan, as provided for on the web site **www.contractororientation.com**, which will be made available to Railway prior to commencement of any work on Railway Property. During the performance of work, the Contractor must audit its work activities. The Contractor must designate an on-site Project Supervisor who will serve as the contact person for the Railway and who will maintain a copy of the Safety Action Plan, safety audits, and Material Safety Datasheets (MSDS), at the job site.

1.05 Railway Flagger Services:

- **1.05.01** The Contractor must give Railway's Roadmaster (telephone 323-307-5815) a minimum of thirty (30) calendar days advance notice when flagging services will be required so that the Roadmaster can make appropriate arrangements (i.e., bulletin the flagger's position). If flagging services are scheduled in advance by the Contractor and it is subsequently determined by the parties hereto that such services are no longer necessary, the Contractor must give the Roadmaster five (5) working days advance notice so that appropriate arrangements can be made to abolish the position pursuant to union requirements.

- **1.05.02** Unless determined otherwise by Railway's Project Representative, Railway flagger will be required and furnished when Contractor's work activities are located over, under and/or within twenty-five (25) feet measured horizontally from centerline of the nearest track and when cranes or similar equipment positioned beyond 25-feet from the track centerline could foul the track in the event of tip over or other catastrophic occurrence, but not limited thereto for the following conditions:

- **1.05.02a** When, upon inspection by Railway's Representative, other conditions warrant.

- **1.05.02b** When any excavation is performed below the bottom of tie elevation, if, in the opinion of Railway's representative, track or other Railway facilities may be subject to movement or settlement.

- **1.05.02c** When work in any way interferes with the safe operation of trains at timetable speeds.

- **1.05.02d** When any hazard is presented to Railway track, communications, signal, electrical, or other facilities either due to persons, material, equipment or blasting in the vicinity.

- **1.05.02e** Special permission must be obtained from the Railway before moving heavy or cumbersome objects or equipment which might result in making the track impassable.

- **1.05.03** Flagging services will be performed by qualified Railway flaggers.

- **1.05.03a** Flagging crew generally consists of one employee. However, additional personnel may be required to protect Railway Property and operations, if deemed necessary by the Railways Representative.

- **1.05.03b** Each time a flagger is called, the minimum period for billing will be the eight (8) hour basic day.

- **1.05.03c** The cost of flagger services provided by the Railway will be borne by the (Agency). The estimated cost for one (1) flagger is approximately between $800.00-$1,600.00 for an eight (8) hour basic day with time and one-half or double time for overtime, rest days and holidays. The estimated cost for each flagger includes vacation allowance, paid holidays, Railway and unemployment insurance, public liability and property damage insurance, health and welfare benefits, vehicle, transportation, meals, lodging, radio, equipment, supervision and other costs incidental to performing flagging services. Negotiations for Railway labor or collective bargaining agreements and rate changes authorized by appropriate Federal authorities may increase actual or estimated flagging rates. **THE FLAGGING RATE IN EFFECT AT THE TIME OF PERFORMANCE BY THE CONTRACTOR HEREUNDER WILL BE USED TO CALCULATE THE ACTUAL COSTS OF FLAGGING PURSUANT TO THIS PARAGRAPH.**

- **1.05.03d** The average train traffic on this route is _____ freight trains per 24-hour period at a timetable speed _____ MPH and _____ passenger trains at a timetable speed of _____ MPH.

1.06 Contractor General Safety Requirements

- **1.06.01 Work in the proximity of railway track(s) is potentially hazardous where movement of trains and equipment can occur at any time and in any direction. All work performed by contractors within 25 feet of any track must be in compliance with FRA Roadway Worker Protection Regulations.**

- **1.06.02 Before beginning any task on Railway Property, a thorough job safety briefing must be conducted with all personnel involved with the task and repeated when the personnel or task changes. If the task is within 25 feet of any track, the job briefing must include the Railway's flagger, as applicable, and include the procedures the Contractor will use to protect its employees, subcontractors, agents or invitees from moving any equipment adjacent to or across any Railway track(s).**

- **1.06.03 Workers must not work within 25 feet of the centerline of any track without an on track safety strategy approved by the Railway's Project Representative. When authority is provided, every contractor employee must know: (1) who the Railway flagger is, and how to contact the flagger, (2) limits of the authority, (3) the method of communication to stop and resume work, and (4) location of the designated places of safety. Persons or equipment entering flag/work limits that were not previously job briefed, must notify the flagger immediately, and be given a job briefing when working within 25 feet of the center line of track.**

- **1.06.04 When Contractor employees are required to work on the Railway Property after normal working hours or on weekends, the Railroad's representative in charge of the project must be notified. A minimum of two employees must be present at all times.**

- **1.06.05** Any employees, agents or invitees of Contractor or its subcontractors under suspicion of being under the influence of drugs or alcohol, or in the possession of same, will be removed from the Railway's Property and subsequently released to the custody of a representative of Contractor management. Future access to the Railway's Property by that employee will be denied.

- **1.06.06** Any damage to Railway Property, or any hazard noticed on passing trains must be reported immediately to the Railway's representative in charge of the project. Any vehicle or machine which may come in contact with track, signal equipment, or structure (bridge) and could result in a train derailment must be reported immediately to the Railway representative in charge of the project and to the Railway's Resource Operations Center at 1(800) 832-5452. Local emergency numbers are to be obtained from the Railway representative in charge of the project prior to the start of any work and must be posted at the job site.

- **1.06.07** For safety reasons, all persons are prohibited from having pocket knives, firearms or other deadly weapons in their possession while working on Railway's Property.

- **1.06.08** All personnel protective equipment (PPE) used on Railway Property must meet applicable OSHA and ANSI specifications. Current Railway personnel protective equipment requirements are listed on the web site, **www.contractororientation.com,** however, a partial list of the requirements include: a) safety glasses with permanently affixed side shields (no yellow lenses); b) hard hats c) safety shoe with: hardened toes, above-the-ankle lace-up and a defined heel; and d) high visibility retro-reflective work wear. The Railroad's representative in charge of the project is to be contacted regarding local specifications for meeting requirements relating to hi-visability work wear. Hearing protection, fall protection, gloves, and respirators must be worn as required by State and Federal regulations. **(NOTE – Should there be a discrepancy between the information contained on the web site and the information in this paragraph, the web site will govern.)**

- **1.06.09 THE CONTRACTOR MUST NOT PILE OR STORE ANY MATERIALS, MACHINERY OR EQUIPMENT CLOSER THAN 25'-0" TO THE CENTER LINE OF THE NEAREST RAILWAY TRACK. MATERIALS, MACHINERY OR EQUIPMENT MUST NOT BE STORED OR LEFT WITHIN 250 FEET OF ANY HIGHWAY/RAIL AT-GRADE CROSSINGS OR TEMPORARY CONSTRUCTION CROSSING, WHERE STORAGE OF THE SAME WILL OBSTRUCT THE VIEW OF A TRAIN APPROACHING THE CROSSING. PRIOR TO BEGINNING WORK, THE CONTRACTOR MUST ESTABLISH A STORAGE AREA WITH CONCURRENCE OF THE RAILROAD'S REPRESENTATIVE.**

- **1.06.10** Machines or vehicles must not be left unattended with the engine running. Parked machines or equipment must be in gear with brakes set and if equipped with blade, pan or bucket, they must be lowered to the ground. All machinery and equipment left unattended on Railway's Property must be left inoperable and secured against movement. (See internet Engineering Contractor Safety Orientation program for more detailed specifications)

- **1.06.11** Workers must not create and leave any conditions at the work site that would interfere with water drainage. Any work performed over water must meet all Federal, State and Local regulations.

- **1.06.12** All power line wires must be considered dangerous and of high voltage unless informed to the contrary by proper authority. For all power lines the minimum clearance between the lines and any part of the equipment or load must be; 200 KV or below - 15 feet; 200 to 350 KV - 20 feet; 350 to 500 KV - 25 feet; 500 to 750 KV - 35 feet; and 750 to 1000 KV - 45 feet. If capacity of the line is not known, a minimum clearance of 45 feet must be maintained. A person must be designated to observe clearance of the equipment and give a timely warning for all operations where it is difficult for an operator to maintain the desired clearance by visual means.

1.07 Excavation

- **1.07.01** Before excavating, the Contractor must determine whether any underground pipe lines, electric wires, or cables, including fiber optic cable systems are present and located within the Project work area. The Contractor must determine whether excavation on Railway's Property could cause damage to buried cables resulting in delay to Railway traffic and disruption of service to users. Delays and disruptions to service may cause business interruptions involving loss of revenue and profits. Before commencing excavation, the Contractor must contact **BNSF's Field Engineering Representative (Greg Rousseau – 909-386-4079).** All underground and overhead wires will be considered HIGH VOLTAGE and dangerous until verified with the company having ownership of the line. **It is the Contractor's responsibility to notify any other companies that have underground utilities in the area and arrange for the location of all underground utilities before excavating.**

- **1.07.02** The Contractor must cease all work and notify the Railway immediately before continuing excavation in the area if obstructions are encountered which do not appear on drawings. If the obstruction is a utility and the owner of the utility can be identified, then the Contractor must also notify the owner immediately. If there is any doubt about the location of underground cables or lines of any kind, no work must be performed until the exact location has been determined. There will be no exceptions to these instructions.

- **1.07.03** All excavations must be conducted in compliance with applicable OSHA regulations and, regardless of depth, must be shored where there is any danger to tracks, structures or personnel.

- **1.07.04** Any excavations, holes or trenches on the Railway's Property must be covered, guarded and/or protected when not being worked on. When leaving work site areas at night and over weekends, the areas must be secured and left in a condition that will ensure that Railway employees and other personnel who may be working or passing through the area are protected from all hazards. All excavations must be back filled as soon as possible.

1.08 Hazardous Waste, Substances and Material Reporting

- **1.08.01** If Contractor discovers any hazardous waste, hazardous substance, petroleum or other deleterious material, including but not limited to any non-containerized commodity or material, on or adjacent to Railway's Property, in or near any surface water, swamp, wetlands or waterways, while performing any work under this Agreement, Contractor must immediately: (a) notify the Railway's Resource Operations Center at 1(800) 832-5452, of such discovery: (b) take safeguards necessary to protect its employees, subcontractors, agents and/or third parties: and (c) exercise due care with respect to the release, including the taking of any appropriate measure to minimize the impact of such release.

1.09 Personal Injury Reporting

- 1.09.01 The Railway is required to report certain injuries as a part of compliance with Federal Railroad Administration (FRA) reporting requirements. Any personal injury sustained by an employee of the Contractor, subcontractor or Contractor's invitees while on the Railway's Property must be reported immediately (by phone

mail if unable to contact in person) to the Railway's representative in charge of the project. The Non-Employee Personal Injury Data Collection Form contained herein is to be completed and sent by Fax to the Railway at 1(817) 352-7595 and to the Railway's Project Representative no later than the close of shift on the date of the injury.

NON-EMPLOYEE PERSONAL INJURY DATA COLLECTION

INFORMATION REQUIRED TO BE COLLECTED PURSUANT TO FEDERAL REGULATION. IT SHOULD BE USED FOR COMPLIANCE WITH FEDERAL REGULATIONS ONLY AND IS NOT INTENDED TO PRESUME ACCEPTANCE OF RESPONSIBILITY OR LIABILITY.

1. Accident City/St _____ 2. Date: _____ Time:
County: _____ 3. Temperature: _____ 4. Weather
(if non-Railway location)

5. Social Security #

6. Name (last, first, mi)

7. Address: Street: _____ City: _____ St._____ Zip:

8. Date of Birth: _____ and/or Age _____ Gender:
(if available)

9. (a) Injury: _____ (b) Body Part:
(i.e. (a) Laceration (b) Hand)

11. Description of Accident (To include location, action, result, etc.):

12. Treatment:
   ? First Aid Only
   ? Required Medical Treatment
   ? Other Medical Treatment

13. Dr. Name _____ 30. Date:

14. Dr. Address:
Street: _____ City: _____ St: _____ Zip:

15. Hospital Name:

16. Hospital Address:
Street: _____ City: _____ St: _____ Zip:

17. Diagnosis:

FAX TO
RAILWAY AT (817) 352-7595
AND COPY TO
RAILWAY ROADMASTER FAX

Exhibit C-1

LAW DEPARTMENT APPROVED

EXHIBIT "C-1"

Agreement
Between
BNSF RAILWAY COMPANY
and the
CONTRACTOR

BNSF RAILWAY COMPANY
Attention: Manager Public Projects

Railway File: 924652S
Agency Project: _____

Gentlemen:

The undersigned (hereinafter called, the "Contractor"), has entered into a contract (the "Contract") dated _____, 200_, the City of Torrance, CA for the performance of certain work in connection with the following project: Construction of the Del Amo Blvd Grade separation off of BNSF Railway's Harbor Subdivision. Performance of such work will necessarily require contractor to enter BNSF RAILWAY COMPANY ("Railway") right of way and property ("Railway Property"). The Contract provides that no work will be commenced within Railway Property until the Contractor employed in connection with said work for **City of Torrance** (i) executes and delivers to Railway an Agreement in the form hereof, and (ii) provides insurance of the coverage and limits specified in such Agreement and Section 3 herein. If this Agreement is executed by a party who is not the Owner, General Partner, President or Vice President of Contractor, Contractor must furnish evidence to Railway certifying that the signatory is empowered to execute this Agreement on behalf of Contractor.

Accordingly, in consideration of Railway granting permission to Contractor to enter upon Railway Property and as an inducement for such entry, Contractor, effective on the date of the Contract, has agreed and does hereby agree with Railway as follows:

Section 1. RELEASE OF LIABILITY AND INDEMNITY

Contractor hereby waives, releases, indemnifies, defends and holds harmless Railway for all judgments, awards, claims, demands, and expenses (including attorneys' fees), for injury or death to all persons, including Railway's and Contractor's officers and employees, and for loss and damage to property belonging to any person, arising in any manner from Contractor's or any of Contractor's subcontractors' acts or omissions or any work performed on or about Railway's property or right-of-way. **THE LIABILITY ASSUMED BY CONTRACTOR WILL NOT BE AFFECTED BY THE FACT, IF IT IS A FACT, THAT THE DESTRUCTION, DAMAGE, DEATH, OR INJURY WAS OCCASIONED BY OR CONTRIBUTED TO BY THE NEGLIGENCE OF RAILWAY, ITS AGENTS, SERVANTS, EMPLOYEES OR OTHERWISE, EXCEPT TO THE EXTENT THAT SUCH CLAIMS ARE PROXIMATELY CAUSED BY THE WILLFUL MISCONDUCT OR SOLE NEGLIGENCE OF RAILWAY.**

THE INDEMNIFICATION OBLIGATION ASSUMED BY CONTRACTOR INCLUDES ANY CLAIMS, SUITS OR JUDGMENTS BROUGHT AGAINST RAILWAY UNDER THE FEDERAL EMPLOYEE'S LIABILITY ACT, INCLUDING CLAIMS FOR STRICT LIABILITY UNDER THE SAFETY APPLIANCE ACT OR THE LOCOMOTIVE INSPECTION ACT, WHENEVER SO CLAIMED.

Contractor further agrees, at its expense, in the name and on behalf of Railway, that it will adjust and settle all claims made against Railway, and will, at Railway's discretion, appear and defend any suits or actions of law or in equity brought against Railway on any claim or cause of action arising or growing out of or in any manner

connected with any liability assumed by Contractor under this Agreement for which Railway is liable or is alleged to be liable. Railway will give notice to Contractor, in writing, of the receipt or dependency of such claims and thereupon Contractor must proceed to adjust and handle to a conclusion such claims, and in the event of a suit being brought against Railway, Railway may forward summons and complaint or other process in connection therewith to Contractor, and Contractor, at Railway's discretion, must defend, adjust, or settle such suits and protect, indemnify, and save harmless Railway from and against all damages, judgments, decrees, attorney's fees, costs, and expenses growing out of or resulting from or incident to any such claims or suits.

In addition to any other provision of this Agreement, in the event that all or any portion of this Article shall be deemed to be inapplicable for any reason, including without limitation as a result of a decision of an applicable court, legislative enactment or regulatory order, the parties agree that this Article shall be interpreted as requiring Contractor to indemnify Railroad to the fullest extent permitted by applicable law. **THROUGH THIS AGREEMENT THE PARTIES EXPRESSLY INTEND FOR CONTRACTOR TO INDEMNIFY RAILROAD FOR RAILROAD'S ACTS OF NEGLIGENCE.**

It is mutually understood and agreed that the assumption of liabilities and indemnification provided for in this Agreement survive any termination of this Agreement.

Section 2. TERM

This Agreement is effective from the date of the Contract until (i) the completion of the project set forth herein, and (ii) full and complete payment to Railway of any and all sums or other amounts owing and due hereunder.

Section 3. INSURANCE

Contractor must, at its sole cost and expense, procure and maintain during the life of this Agreement the following insurance coverage:

A. Commercial General Liability insurance. This insurance must contain broad form contractual liability with a combined single limit of a minimum of $5,000,000 each occurrence and an aggregate limit of at least $10,000,000. Coverage must be purchased on a post 1998 ISO occurrence form or equivalent and include coverage for, but not limit to the following:

- Bodily Injury and Property Damage
- Personal Injury and Advertising Injury
- Fire legal liability
- Products and completed operations

This policy must also contain the following endorsements, which must be indicated on the certificate of insurance:

- It is agreed that any workers' compensation exclusion does not apply to ***Railroad*** payments related to the Federal Employers Liability Act or a ***Railroad*** Wage Continuation Program or similar programs and any payments made are deemed not to be either payments made or obligations assumed under any Workers Compensation, disability benefits, or unemployment compensation law or similar law.
- The definition of insured contract must be amended to remove any exclusion or other limitation for any work being done within 50 feet of railroad property.
- Any exclusions related to the explosion, collapse and underground hazards must be removed.

No other endorsements limiting coverage as respects obligations under this_Agreement may be included on the policy.

B. Business Automobile Insurance. This insurance must contain a combined single limit of at least $1,000,000 per occurrence, and include coverage for, but not limited to the following:

- Bodily injury and property damage

- Any and all vehicles owned, used or hired

C. Workers Compensation and Employers Liability insurance including coverage for, but not limited to:

- California's statutory liability under the worker's compensation laws of the state(s) in which the work is to be performed. If optional under State law, the insurance must cover all employees anyway.
- Employers' Liability (Part B) with limits of at least $500,000 each accident, $500,000 by disease policy limit, $500,000 by disease each employee.

D. Railroad Protective Liability insurance naming only the ***Railroad*** as the Insured with coverage of at least $5,000,000 per occurrence and $10,000,000 in the aggregate. The policy Must be issued on a standard ISO form CG 00 35 10 93 and include the following:

- Endorsed to include the Pollution Exclusion Amendment (ISO form CG 28 31 10 93)
- Endorsed to include the Limited Seepage and Pollution Endorsement.
- Endorsed to remove any exclusion for punitive damages.
- No other endorsements restricting coverage may be added.
- The original policy must be provided to the ***Railroad*** prior to performing any work or services under this Agreement

Other Requirements:

All policies (applying to coverage listed above) must not contain an exclusion for punitive damages and certificates of insurance must reflect that no exclusion exists.

Contractor agrees to waive its right of recovery against ***Railroad*** for all claims and suits against ***Railroad***. In addition, its insurers, through the terms of the policy or policy endorsement, waive their right of subrogation against ***Railroad*** for all claims and suits. The certificate of insurance must reflect the waiver of subrogation endorsement. Contractor further waives its right of recovery, and its insurers also waive their right of subrogation against ***Railroad*** for loss of its owned or leased property or property under contractor's care, custody or control.

Contractor's insurance policies through policy endorsement, must include wording which states that the policy is primary and non-contributing with respect to any insurance carried by ***Railroad***. The certificate of insurance must reflect that the above wording is included in evidenced policies.

All policy(ies) required above (excluding Workers Compensation and if applicable, Railroad Protective) must include a severability of interest endorsement and ***Railroad*** must be named as an additional insured with respect to work performed under this agreement. Severability of interest and naming ***Railroad*** as additional insured must be indicated on the certificate of insurance.

Contractor is not allowed to self-insure without the prior written consent of ***Railroad.*** If granted by ***Railroad***, any deductible, self-insured retention or other financial responsibility for claims must be covered directly by contractor in lieu of insurance. Any and all ***Railroad*** liabilities that would otherwise, in accordance with the provisions of this ***Agreement***, be covered by contractor's insurance will be covered as if contractor elected not to include a deductible, self-insured retention or other financial responsibility for claims.

Prior to commencing the Work, contractor must furnish to ***Railroad*** an acceptable certificate(s) of insurance including an original signature of the authorized representative evidencing the required coverage, endorsements, and amendments and referencing the contract audit/folder number if available. The policy(ies) must contain a provision that obligates the insurance company(ies) issuing such policy(ies) to notify ***Railroad*** in writing at least 30 days prior to any cancellation, non-renewal, substitution or material alteration. This cancellation provision must be indicated on the certificate of insurance. Upon request from ***Railroad***, a certified duplicate original of any required policy must be furnished. Contractor should send the certificate(s) to the following address:

Ebix BPO
PO Box 12010-BN
Hemet, CA 92546-8010
Fax number: 951-766-2299

Any insurance policy must be written by a reputable insurance company acceptable to ***Railroad*** or with a current Best's Guide Rating of A- and Class VII or better, and authorized to do business in the state(s) in which the service is to be provide.

Contractor represents that this ***Agreement*** has been thoroughly reviewed by contractor's insurance agent(s)/broker(s), who have been instructed by contractor to procure the insurance coverage required by this ***Agreement***. Allocated Loss Expense must be in addition to all policy limits for coverages referenced above.
Not more frequently than once every five years, ***Railroad*** may reasonably modify the required insurance coverage to reflect then-current risk management practices in the railroad industry and underwriting practices in the insurance industry.

If any portion of the operation is to be subcontracted by contractor, contractor must require that the subcontractor provide and maintain the insurance coverages set forth herein, naming ***Railroad*** as an additional insured, and requiring that the subcontractor release, defend and indemnify ***Railroad*** to the same extent and under the same terms and conditions as contractor is required to release, defend and indemnify ***Railroad*** herein.

Failure to provide evidence as required by this section will entitle, but not require, ***Railroad*** to terminate this ***Agreement*** immediately. Acceptance of a certificate that does not comply with this section will not operate as a waiver of contractor's obligations hereunder.

The fact that insurance (including, without limitation, self-insurance) is obtained by contractor will not be deemed to release or diminish the liability of contractor including, without limitation, liability under the indemnity provisions of this ***Agreement***. Damages recoverable by ***Railroad*** will not be limited by the amount of the required insurance coverage.

For purposes of this section, ***Railroad*** means "Burlington Northern Santa Fe Corporation", "BNSF RAILWAY COMPANY" and the subsidiaries, successors, assigns and affiliates of each.

Section 4. EXHIBIT "C" CONTRACTOR REQUIREMENTS

The Contractor must observe and comply with all provisions, obligations, requirements and limitations contained in the Contract, and the Contractor Requirements set forth on Exhibit "C" attached to the Contract and this Agreement, , including, but not be limited to, payment of all costs incurred for any damages to Railway roadbed, tracks, and/or appurtenances thereto, resulting from use, occupancy, or presence of its employees, representatives, or agents or subcontractors on or about the construction site.

Section 5. TRAIN DELAY

Contractor is responsible for and hereby indemnifies and holds harmless Railway (including its affiliated railway companies, and its tenants) for, from and against all damages arising from any unscheduled delay to a freight or passenger train which affects Railway's ability to fully utilize its equipment and to meet customer service and contract obligations. Contractor will be billed, as further provided below, for the economic losses arising from loss of use of equipment, contractual loss of incentive pay and bonuses and contractual penalties resulting from train delays, whether caused by Contractor, or subcontractors, or by the Railway performing work under this Agreement. Railway agrees that it will not perform any act to unnecessarily cause train delay.

For loss of use of equipment, Contractor will be billed the current freight train hour rate per train as determined from Railway's records. Any disruption to train traffic may cause delays to multiple trains at the same time for the same period.

Additionally, the parties acknowledge that passenger, U.S. mail trains and certain other grain, intermodal, coal and freight trains operate under incentive/penalty contracts between Railway and its customer(s). Under these arrangements, if Railway does not meet its contract service commitments, Railway may suffer loss of performance or incentive pay and/or be subject to penalty payments. Contractor is responsible for any train performance and incentive penalties or other contractual economic losses actually incurred by Railway which are attributable to a train delay caused by Contractor or its subcontractors.

The contractual relationship between Railway and its customers is proprietary and confidential. In the event of a train delay covered by this Agreement, Railway will share information relevant to any train delay to the extent consistent with Railway confidentiality obligations. Damages for train delay for certain trains may be $382.20 per hour per incident. **THE RATE THEN IN EFFECT AT THE TIME OF PERFORMANCE BY THE CONTRACTOR HEREUNDER WILL BE USED TO CALCULATE THE ACTUAL COSTS OF TRAIN DELAY PURSUANT TO THIS AGREEMENT.**

Contractor and its subcontractors must give Railway's representative (Greg Rousseau – 909-386-4079) four (4) weeks advance notice of the times and dates for proposed work windows. Railway and Contractor will establish mutually agreeable work windows for the project. Railway has the right at any time to revise or change the work windows due to train operations or service obligations. Railway will not be responsible for any additional costs or expenses resulting from a change in work windows. Additional costs or expenses resulting from a change in work windows shall be accounted for in Contractor's expenses for the project.

Contractor and subcontractors must plan, schedule, coordinate and conduct all Contractor's work so as to not cause any delays to any trains.

Kindly acknowledge receipt of this letter by signing and returning to the Railway two original copies of this letter, which, upon execution by Railway, will constitute an Agreement between us.

_____
(Contractor)

By:_____
Printed Name:_____
Title:_____

Contact Person: _____
Address: _____
_____
City:_____State:___Zip:____
Fax: _____
Phone: _____
E-mail:_____

BNSF Railway Company

By:_____
Name:_____
Manager Public Projects

Accepted and effective this _____day of 20__.

EXHIBIT D

Exhibit D

***** MAINTAIN PROPRIETARY CONFIDENTIALITY *****

BNSF RAILWAY COMPANY
FHPM ESTIMATE FOR
CITY OF TORRANCE

LOCATION ALCOA | DETAILS OF ESTIMATE | PLAN ITEM : 000115794 | VERSION : 1

PURPOSE, JUSTIFICATION AND DESCRIPTION

100% BILLABLE TO CITY OF TORRANCE
1) 250 DAYS OF BNSF FLAGMAN AT 11HRS PER DAY.
2) 125 DAYS OF BNSF CONTRACTED INSPECTOR/COORDINATOR AT $700/DAY

FLAGGING AND INSPECTION FOR THE DEL AMO GRADE SEPARATION PROJECT

"MAINTAIN PROPRIETARY CONFIDENTIALITY" AND,
"THE PHYSICAL LIMITS OF THIS PROJECT ARE DESCRIBED BY LINE SEGMENT, MILE POST RANGES, AND IN SOME CASES TRACK NUMBER. THIS IS THE PRIMARY AREA FOR THE PROJECT. THERE WILL BE CASES WHERE WORK MAY OCCUR BEYOND THE DEFINED LIMITS.
PROJECTS THAT INCLUDE SIGNAL, ELECTRICAL, OR TELECOMMUNICATION EQUIPMENT MAY REQUIRE ACTIVITY BEYOND THESE DEFINED TRACK LIMITS. ALL OR PORTIONS OF SOME PROJECTS MAY OCCUR IN AREAS WHERE NO MILEPOST SIGNS EXIST SUCH AS YARDS." AND,
"THIS ESTIMATE IS GOOD FOR 90 DAYS. THEREAFTER THE ESTIMATE IS SUBJECT TO CHANGE IN COST FOR LABOR, MATERIAL, AND OVERHEAD"

RFA NO. 96-056-09 AUTHORITY NO. 7-XXXX-09

DESCRIPTION	QUANTITY	U/M	COST	TOTAL $
**********				
LABOR				
**********				
FLAGGING - OTHER R.O.W.- CAP	2750.0	MH	64,563	
PAYROLL ASSOCIATED COSTS			44,419	
EQUIPMENT EXPENSES			20,014	
DA LABOR OVERHEADS			69,082	
INSURANCE EXPENSES			10,330	
TOTAL LABOR COST			208,408	208,408
**********				
MATERIAL				
**********				
TOTAL MATERIAL COST			0	0
**********				
OTHER				
**********				
CONTRACTED INSPECTION/COORDINATION	125.0	DAY	87,500	
TOTAL OTHER ITEMS COST			87,500	87,500
PROJECT SUBTOTAL				295,908
CONTINGENCIES				29,590
BILL PREPARATION FEE				3,255
GROSS PROJECT COST				328,753
LESS COST PAID BY BNSF				0
TOTAL BILLABLE COST				328,753

Exhibit D

***** MAINTAIN PROPRIETARY CONFIDENTIALITY *****

BNSF RAILWAY COMPANY
FHPM ESTIMATE FOR
CITY OF TORRANCE

LOCATION ALUMINUM SPUR TO ALCOA | DETAILS OF ESTIMATE | PLAN ITEM : 000116461 | VERSION : 1

PURPOSE, JUSTIFICATION AND DESCRIPTION

DESCRIPTION	QUANTITY	U/M	COST	TOTAL $
**********				
LABOR				
**********				
PLACE DERAIL(S)	96.0	MH	2,125	
PLACE FIELD WELDS - CAP	174.4	MH	4,136	
PLACE PRIVATE CROSSING - CAP	48.0	MH	1,043	
PLACE TRACK PANELS - ADDITION - CAP	240.0	MH	5,211	
PLACE TURNOUT	261.6	MH	5,915	
REMOVE TRACK	120.0	MH	2,606	
REMOVE/PICKUP TURNOUT	120.0	MH	2,606	
SURFACE TRACK - ADDITION - CAP	52.32	MH	1,282	
UNLOAD TRACK PANELS - ADDITION	48.0	MH	1,043	
UNLOAD TURNOUT - ADDITION - CAP	52.32	MH	1,183	
PAYROLL ASSOCIATED COSTS			18,673	
EQUIPMENT EXPENSES			15,741	
DA LABOR OVERHEADS			29,046	
INSURANCE EXPENSES			4,338	
TOTAL LABOR COST			94,948	94,948
**********				
MATERIAL				
**********				
CHIPS, NEWBERRY (NC, SC)	50.0	NT **	263	
DERAIL, SINGLE 115 LB LH NO TRACK TIES	1.0	EA **	4,300	
TRACK PANEL,115 LB 40 FT - 10 FT TIES-NEW STD	7.0	EA **	35,000	
TRACK PANEL, 115 LB 40 FT - 10 FT TIES-PANDROL	1.0	EA **	4,940	
RAIL, TRANSN,LH,25 FT, 136-1/4 WORN 115	2.0	EA **	2,728	
RAIL, TRANSN,RH,25 FT, 136-1/4 WORN 115	2.0	EA **	2,728	
TURNOUT, 136-11 LH MANUAL RBM FROG 19.6 PT	1.0	EA **	64,849	
WELDKIT, GENERIC FOR ALL RAIL WEIGHTS	20.0	KT	1,420	
CONC 115 08-SEC WITH FILLER FOR WOOD	32.0	FT	6,631	
BALLAST TRUCKED IN AT $40/TONE DELIVERED	300.0	NT	12,000	
MATERIAL HANDLING			6,741	
ONLINE TRANSPORTATION			3,500	
USE TAX			11,698	
OFFLINE TRANSPORTATION			1,224	
TOTAL MATERIAL COST			158,022	158,022
**********				
OTHER				
**********				
HEAVY EQUIPMENT W/ OPERATOR	20.0	LS **	100,000	
TOTAL OTHER ITEMS COST			100,000	100,000
PROJECT SUBTOTAL				352,970
CONTINGENCIES				33,474
BILL PREPARATION FEE				3,865
GROSS PROJECT COST				390,309
LESS COST PAID BY BNSF				0
TOTAL BILLABLE COST				390,309

Exhibit E

Form Approved by VP-Law

Exhibit E

[Public Projects Manager's letterhead]

Date: April 16, 2009

Mr. Craig Bilezerian
City of Torrance Public Works Department
20500 Madrona Avenue
Torrance, CA 90503

Re: Final Approval of Plans and Specifications dated December 30, 2008, drafted by Moffatt & Nichol Engineers **(hereinafter called, the "Plans and Specifications")**

Dear Mr. Bilezerian:

This letter serves as BNSF RAILWAY COMPANY's ("BNSF") final written approval of the Plans and Specifications covering the construction of the Del Amo Boulevard Extension/Grade Separation, T-30. This final written approval is given to the City of Torrance, CA ("Agency") pursuant to Article III, Section 1 of that certain Overpass Agreement between BNSF and Agency, dated _____, 2009. If the Plans and Specifications are revised by Agency subsequent to the date set forth above, this letter shall no longer serve as final written approval of the Plans and Specifications and Agency must resubmit said Plans and Specifications to BNSF for final written approval.

Regards,

Melvin Thomas
Manager Public Projects
BNSF Railway Company

Exhibit F

Exhibit F

BNSF Bridge Requirements

BRIDGE DESIGN, PLANS & SPECIFICATIONS:

Except for the design of temporary falsework and shoring, BNSF review of the Structure plans will be limited to the vertical and horizontal clearances, sight distance for existing train signals, foundation dimensions and drainage characteristics as they relate to existing and future tracks. BNSF will not review structural design calculations for the permanent Structure unless a member or members are influenced by railroad live loads.

Temporary falsework and shoring plans and calculations must be reviewed and approved by BNSF prior to beginning construction. The Agency shall perform an independent review of the design calculations for temporary falsework and shoring prior to submitting them to BNSF for approval. Temporary construction clearances must be no less than 15 feet measured horizontally from the centerline of the nearest track and 21 feet-6inches measured vertically from the top of rail of the most elevated track to the bottom of lowest temporary falsework member. State regulatory agencies may have more restrictive requirements for temporary railroad clearances.

For the permanent Structure, the Agency will submit plans showing the least horizontal distance from the centerline of existing and future tracks to the face of the nearest member of the proposed Structure. The location of the least horizontal distance must be accurately described such that BNSF can determine where it will occur in both the horizontal and vertical plane. If the permanent member is within 25 feet of the nearest track (or future track), collision walls shall be incorporated into the permanent Structure design according to American Railway Engineering and Maintenance Association Manual of Recommended Practice - Chapter 8 - Article 2.1.5.

For the permanent Structure, the Agency will submit plans showing the least vertical clearance from top of the most elevated rail of existing and future tracks to the lowest point of the proposed Structure. A profile of the existing top of rail elevation shall be plotted on the bridge plans. The profile shall extend for 500 feet in each direction of the proposed overpass and a separate profile shall be plotted for each track. If the existing top of rail profile(s) is not uniform such that a sag exists in the vicinity of the proposed Structure, the permanent Structure vertical clearance shall be increased sufficiently to accommodate a raise in the track profile to remove the sag. Prior to beginning construction of the permanent Structure, the top of rail elevations should be checked and verified that they have not changed from the assumed elevations utilized for the design of the bridge.

Prior to issuing any invitation to bid on construction of the Structure, the Agency should conduct a pre-bid meeting where prospective Contractors have the opportunity to communicate with BNSF personnel regarding site specific train speeds, train density, and general safety requirements for men and equipment working near live tracks. Any invitation to bid and specifications for the Structure must be submitted to BNSF for review and approval prior to letting of bids for the Project.

BRIDGE CONSTRUCTION:

After awarding the bid, but prior to the Contractor entering BNSF's right-of –way or property, the Agency should conduct a pre-construction meeting with BNSF personnel in attendance to reiterate the safety requirements of construction activity adjacent to live tracks.

During construction, BNSF may require an independent engineering inspector to be present during certain critical activities of the Project, including but not limited to: driving foundation piles, erecting falsework, construction of shoring and retaining walls, placing concrete, placing soil backfill and compaction processes. The Agency shall reimburse BNSF for all costs of supplemental inspection services.

Within 90 days of the conclusion of the Project and final acceptance by BNSF, the Agency will provide BNSF with a complete electronic set of the bridge plans labeled "As Built". Those plans will reflect any and all deviations from the original plans that occurred during construction. The "As Built" plans will be submitted in Micro Station *.dgn electronic format (preferred) or AutoCAD *.dwg format. Electronic plans are to be submitted in the original format used for CAD plan preparation and not converted to another format prior to submission. Actual measured "as constructed" clearances shall be shown as well as depth, size and location of all foundation components. The plans shall show dimensioned locations of existing and relocated utilities.

BRIDGE MAINTENANCE:

The Agency will be responsible for maintenance and repair of the Structure including the earth retention components, embankment slopes, erosion control, surface drainage, fencing, deck drains, landscaping, paint, walkways, handrails, lighting, and other improvements associated with the Project.

Fencing and other pedestrian access controls within BNSF's right-of-way and incorporated into the Project shall be designed and maintained by the Agency. Trespasser control shall be the responsibility of the Agency. Graffiti removal will be the responsibility of the Agency.

BRIDGE INSPECTION:

The Agency will conduct annual routine structural inspections. In the event of an earthquake, fire, flood, damage from vehicular impacts or other emergent situations, the Agency will provide an immediate inspection by qualified personnel and notify BNSF of damage that may affect safe passage of trains. If necessary the Agency will embargo weights or provide lane closures or other such measures to protect the structural integrity of the Structure such that there can be continuous safe passage of trains until repairs are made.

BRIDGE ALTERATIONS:

Except as provided otherwise by this Agreement, there will be no alterations made to the Structure that will alter the railroad vertical or horizontal clearances provided by the original design. Pipelines will be not be added or attached to the Structure without first submitting plans and calculations to BNSF for review and approval.

Exhibit G

Avenue Grade Separation Project
Estimated Total Project Cost

Exhibit H

Utility Accommodation policy

Burlington Northern Santa Fe

UTILITY ACCOMMODATION POLICY

Engineering Services
4515 Kansas Avenue
Kansas City, KS 66106

April 16, 2004
Revised May 5, 2007

TABLE OF CONTENTS

PART 1 - GENERAL POLICY

A. Policy Application 1-1
B. Utility License Agreement Requirements 1-3
C. Safety 1-5
D. Maintenance and Servicing Utilities 1-6
E. Preservation, Restoration and Cleanup 1-7
F. Protection of Vegetation 1-7

PART 2 - UTILITIES PARALLELING RAILROAD PROPERTY

A. General Provisions 2-1
B. Overhead Installations 2-1
C. Underground Installations 2-2
D. Attachment to Bridges and Other Structures 2-3

PART 3 - UTILITIES CROSSING RAILROAD PROPERTY

A. General Provisions 3-1
B. Overhead Installations 3-1
C. Underground Installations 3-2

PART 4 - PLANS, APPROVALS AND PROCEDURES

A. Plans and Approvals 4-1
B. License Procedures 4-2
C. Construction 4-2

PART 5 - APPENDIX

References 5-1
Definition of Terms 5-2
Applicant's Pipeline Crossing Checklist 5-5
Application for Pipelines 5-6
Application for Wirelines 5-7

****

PART 1

GENERAL POLICY

****

PART 1 - GENERAL POLICY

A. Policy Application

1. Purpose

This policy is to prescribe the accommodation, location and method of installation, adjustments, removal, relocation and maintenance of utility facilities within the property of Burlington Northern & Santa Fe Railway Company, referred to hereafter as BNSF. The policy was developed in the interest of safety, protection, utilization, and future development of BNSF with due consideration given to public and private service afforded by adequate and economical utility installations.

2. Application

The policy concerning utility accommodations shall apply to all:

a. New utility installations.

b. Additions to existing utility installations.

c. Adjustment and relocation of utilities.

d. Existing or planned utility installations for which agreements with BNSF were entered prior to the date of the adoption of this policy.

e. Existing utility installations that do not meet the license requirements may remain at the discretion of BNSF.

Various types of utility lines not specifically discussed herein shall be considered within the provisions of this policy. It shall be the general practice to consider all lines carrying caustic, flammable or explosive materials under the provisions for high-pressure gas and liquid fuel lines.

3. Scope

Utilities include lines, facilities and systems for producing, transmitting or distributing communications, power, electricity, light, heat, gas, oil, crude products, water, steam, waste, storm water and other similar commodities which are privately, publicly or cooperatively owned and which serve directly or indirectly the public or any part thereof.

A Utility Agreement License allowing a Utility Owner the privilege of placing its facilities in or on railroad property does not constitute permanent right for such usage. Any removal, remodeling, maintenance or relocation of the facilities, whether or not required by BNSF, will be accomplished promptly by the Utility Owner at no cost to BNSF.

4. Exceptions

Exceptions to any design, location or methods of installation provisions contained in this policy must be authorized by BNSF. Requests for exceptions will be considered only where it is shown that extreme hardship and/or unusual conditions provide justification and where alternate measures can be prescribed in keeping with the intent of this policy. All requests for exceptions shall be fully documented including design data, cost comparisons and other pertinent information.

5. Liability

The Utility Owner, it successor, or assigns shall assume all risk and liability for accidents and damages that may occur to persons or property on account of this work, and shall indemnify and hold BNSF harmless from any and all costs, liabilities, expenses, suits, judgments or damages to persons or property or claims of any nature whatsoever arising out of or in connection with the permit, or the operation and performance thereunder by the utility, its agents, employees or subcontractors. In this regard, it is further understood and agreed that the utility may be required to obtain insurance coverage as determined by BNSF.

The Utility Owner agrees that if liability insurance is required, it will file with the designated office, prior to granting of the license, "Certificates of Insurance" or other evidence to show that the appropriate insurance is carried.

Insurance as may be required shall be maintained in force until the final release of the Utility Owner by BNSF from all obligations under the terms of the license. The insurance contract shall cover claims for such length of time as law permits said claims. The insurance document shall include a clause requiring the insurer to notify BNSF ten (10) days in advance of any cancellation or change in insurance contacts.

The Utility Owner is responsible for any subcontractor to be knowledgeable of the policy and to require all work to be in compliance with this policy. Subcontractors must carry a liability insurance policy unless the subcontractor is covered by the Utility Owner's insurance.

6. Replacement of Facility

Replacement of existing facility with the same facilities or facilities of a different type, or design, is to be considered as a new utility installation and all work shall adhere to this policy.

7. Change in Ownership

   It is the Utility Owner's responsibility to inform BNSF, in writing, of any name, ownership or address changes.

8. Noncompliance

   Noncompliance with any terms of this Utility Accommodation Policy or Utility License Agreements may be considered as cause for discontinuance of construction or operations until compliance is assured. Continued noncompliance will result in the revocation of the license. The cost of any work required by BNSF in the removal of non-complying construction will be assessed against the Utility Owner.

9. Discharge of Waste Material

   Applications for a Utility License Agreement for the installation of utility facilities which will discharge materials into the nation's waters, must comply with all applicable requirements of Corps of Engineers, and other federal, state or local environmental protection agencies. Identification of applicable requirements and administration of compliance procedures are the responsibility of the Utility Owner.

B. Utility License Agreement Requirements

1. General

   Utility License Agreements are required when utility facilities are installed, relocated, removed or maintained along or across all BNSF property.

   If liability insurance is required, then evidence of adequate liability insurance is to be on file with BNSF for each agreement.

2. Applications

   Approved requests to install, maintain, relocate or remove a utility within the property of BNSF shall be authorized by a Utility License Agreement. The applications for utility license agreements along with plans for the proposed installation shall be submitted to BNSF and approved before construction has commenced.

3. Location

   a. Utility lines shall be located to avoid or minimize the need for adjustments for future railroad improvements and to permit access to the utility lines for their maintenance with minimum interference to railroad traffic.

b. Pipelines shall be installed under tracks by boring, jacking, or in some cases, open-trenching. **WATER JETTING IS NOT PERMITTED.**

c. Where practical, pipelines carrying liquefied petroleum gas shall cross the railway where the tracks are carried on an embankment.

d. All high-pressure pipelines (greater than 60-psi internal pressure), except those in public roads, shall be prominently marked at the property line (on both sides of the track for under crossings) by signs which state the size of the line and its depth.

   Example:

   CAUTION: 30-inch diameter high-pressure Gas main 7 feet deep.

4. Design Considerations

a. The design of any utility installation will be the responsibility of the Utility Owner. An installation within the railroad property must be reviewed and approved by the railroad with regard to location and the manner of adjustment. This includes the measures to be taken to preserve the safety and flow of rail traffic, structural integrity of the roadway or structure, ease of maintenance and the integrity of the utility facility. Utility installations, on, over or under BNSF property shall conform with requirements contained herein and/or as a minimum, the appropriate requirements outlined in the following:

   1) Safety Rules for the Installation and Maintenance of Electric Supply and Communication Lines-National Electric Safety Code.

   2) Title 49 C.F.R. Part 192, Transportation of Natural and Other Gas by Pipeline: Minimum Federal Safety Standards and Amendments.

   3) Title 49 C.F.R. Part 195, Transportation of Liquids by Pipelines and Amendments.

   4) American Society for Testing and Materials (ASTM) Specifications - latest edition.

   5) Manual on Uniform Traffic Control Devices - with revisions.

   6) Rules and Regulations for Public Water Systems - latest edition, published by the appropriate State Health Department.

b. All utility installations on, over or under BNSF property shall be of durable materials designed for long service life and relatively free from routine servicing and maintenance. Conformance with current applicable material specifications and codes is mandatory.

c. References given to any manual, publication or specification are intended to be the most current edition. If a conflict occurs between any publication and this manual, the most restrictive specification will be used.

d. For all boring and jacking installations under main and passing tracks, greater than 26 inches in diameter, and at a depth of between 5.5 and 10.0 feet below top of tie, a geotechnical study will need to be performed to determine the presence of granular material and/or high water table elevation, at the sole expense of the Permittee. The study will include recommendations and a plan for a procedure to prevent failure and a collapse of the bore. Generally, core samples are to be taken near the ends of tie at the proposed location, at least as deep as the bottom of the proposed horizontal bore. Test results must be reviewed and approved by BNSF, or its agent, prior to boring activities commencing. BNSF reserves the rights, based on test results, to require the Permittee to select an alternate location, or to require additional engineering specifications be implemented, at the sole expense of the Permittee, in order to utilize existing location.

C. Safety

1. A safety orientation course should be completed by all workers prior to entering BNSF property. It is the contractor's responsibility to conduct the safety training and implementation of a safety program for its employees. Training materials are available on the web site: www.contractororientation.com. The contractor must comply with all federal, state and local safety regulations.

2. Flagging

   When work is performed within twenty-five (25) feet of the centerline of the track, railroad flagging will be required.

   a. Railroad flagging will be required:

      1) During the period of construction when it is necessary for the Contractor to operate equipment in the vicinity of, or over, BNSF property which may endanger railroad operations, or

      2) Two or more railroad flagmen may be required at other times that the Railway Company Roadmaster's sole discretion shall deem necessary.

   b. Flagging services shall be performed by BNSF employees and the total cost borne by the Utility Owner.

   c. The Utility Owner will be billed monthly at a rate to be determined by BNSF to include labor and payroll associated costs plus any expenses incurred by BNSF for flagging services.

   d. A written request for flagging services will be required at least 72 hours prior to the time when such services are needed. This request is made to the BNSF Roadmaster, as noted in agreement.

3. Material Storage

Storage of materials, parking of equipment and vehicles when not used in actual utility work will not be permitted on railroad property.

D. Maintenance and Servicing Utilities

1. Utility Owner's Responsibility

   a. Maintenance of the utility is the responsibility of the Utility Owner.

   b. Maintenance must be performed to keep the facility in an as-constructed condition, and in a good state of repair in accordance with the requirements of Federal, State and Local laws, regulatory standards and utility codes.

   c. It is the Utility Owner's responsibility to replace and stabilize all earth cover and vegetation when it has eroded over an underground utility facility where such erosion is due to, or caused by, the placement or existence of the underground utility facility.

   d. The Utility Owner shall be responsible for any settlement of backfill, fills, and embankments that may occur.

2. Emergency Maintenance

   a. Emergency maintenance of utilities located on railroad property is permissible without obtaining a Utility License Agreement if an emergency exists that is dangerous to the life, safety or welfare of the public and which requires immediate repair. The Utility Owner shall take all necessary and reasonable safety measures to protect the public and the railroad.

   b. The Utility Owner, in such and event, will advise the Railway Company's Roadmaster as soon as possible. Damage to the right-of-way and facilities will be restored to its original condition. A Utility License Agreement should be requested by the Utility Owner within the second working day provided the work is not covered under any previously granted license. Flagging requirements described earlier apply in all situations.

E. Preservation, Restoration and Cleanup

1. Disturbed Areas

   a. Areas of railroad property, disturbed by the installation, maintenance, removal and relocation of utilities shall be kept to a minimum.

   b. Disturbed areas shall be returned to normal grade and elevation, with compaction of backfill material, and all excess or undesirable material removed by the Utility Owner. The Utility Owner shall replace destroyed vegetation by sodding, or seeding, fertilizing and mulching, or a combination thereof.

   c. The Utility Owner shall provide protection against erosion in disturbed areas that are subject to erosion. Such protection may be in the form of rock riprap, wash checks, hay or straw cover, or other material that is approved and does not interfere with railroad maintenance.

2. Drainage Facilities

   Care shall be taken to avoid disturbing existing drainage facilities. Underground utility facilities shall be bedded with pervious material and outlets provided for entrapped water. Underdrains should be provided where necessary.

3. Cleanup

   Unused material or debris shall be removed from the work site area. At the end of every construction day, construction equipment and materials shall be removed as far from the operating railroad tracks as possible (minimum 25 feet from centerline).

F. Protection of Vegetation

1. Trimming, Clearing or Removal of Vegetation

   a. Consistent with the preservation of planted vegetation, consideration will be given to Utility Owners for the necessary trimming, clearing or removal of vegetation to provide adequate clearance of overhead wires. Such work will be done in accordance with established practices and standards; however, approval will not be granted for wasteful or wanton trimming, or removal in order to provide easy solutions to a difficult situation.

   b. No trees, shrubs, bushes, vines or ground cover on railroad property shall be sprayed, trimmed, cut down, rooted up, removed or mutilated in any manner unless a permit is granted by BNSF to do such work.

2. Chemical Brush Control

   a. Spraying brush and seedling tree growth to prevent re-sprouting may be permitted, and when permitted, shall be carried out with extreme caution and careful performance. The Utility Owner shall be responsible for the performance of their employees or contractors in the application of brush control and approved by BNSF Environmental Department.

   b. All spraying shall be done by a herbicide applicator that is licensed in the state where the work is to be performed.

   c. Permit applications for spraying shall list the kinds of chemical weed and brush killers that will be used. When liability insurance is required, it shall be provided by the herbicide applicator, or be insured under the liability insurance of the Utility Owner.

   d. Plants over five (5) feet in height should not be sprayed for control. Brush over five (5) feet in height, which is to be removed, should be cut and the stumps treated to prevent growth. Shrubbery type growth such as dogwood, sumac, redbud, plum, etc., should not be sprayed as a general rule. Steep slopes, where brushy growth is a major factor in preventing erosion, should not be sprayed.

3. Tree Pruning

   a. Tree pruning on railroad property for utility lines will utilize the best horticultural practices. All cut branches, dead limbs, etc., shall be removed. Such materials shall not be burned or disposed of on railroad property unless permission is granted by Utility License Agreement.

   b. Should burning be permitted, the Utility Owner will be held liable for any damage to grass, crops, native shrubs and trees arising from careless burning of such brush.

   c. Any and all limbs trimmed shall be removed with a clean cut and all limb scars over one (1) inch in diameter shall be treated with appropriate tree paint.

****

PART 2

UTILITIES PARALLELING

RAILROAD PROPERTY

****

PART 2 - UTILITIES PARALLELING RAILROAD PROPERTY

A. General Provisions

This section of the policy applies to all public and private utilities, including electric power, telephone (including fiber optics), telegraph, cable television, water, gas, oil, petroleum products, steam, chemicals, sewage, drainage, irrigation and similar lines that are located, adjusted or relocated within the property under the jurisdiction of BNSF. Such utilities may involve underground, surface or overhead facilities.

Any utility line greater than five hundred (500) feet in length will be considered a parallel line and is to be located on uniform alignment, within ten (10) feet or less of the property line so as to provide a safe environment and to preserve space for future railroad improvements or other utility installations. BNSF Engineering must approve any installation over one mile.

Utilities will be located so as to provide a safe environment and shall conform to the current "National Electrical Safety Code," "American Waterworks Association Specifications," Federal Pipeline Safety Regulations," and "The American Railway Engineering and Maintenance Association Specifications." Where laws or orders of public authority prescribe a higher degree of protection, then the higher degree of protection prescribed shall supersede the provisions of this manual.

B. Overhead Installations

1. Minimum four feet clearance required above signal and communication lines.

2. Poles must be located 50 feet out from the centerline of railroad main, branch and running tracks, CTC sidings, and heavy tonnage spurs. Pole location adjacent to industry tracks; must provide at least a 10-foot clearance from the centerline of track, when measured at right angles. If located adjacent to curved track, then said clearance must be increased at a rate of 1-½ inches per degree of curved track.

3. Regardless of the voltage, unguyed poles shall be located a minimum distance from the centerline of any track, equal to the height of the pole above the ground-line plus 10 feet. If guying is required, the guys shall be placed in such a manner as to keep the pole from leaning/falling in the direction of the tracks.

4. Poles (including steel poles) must be located a minimum distance from the railroad signal and communication line equal to the height of the pole above the ground-line or else be guyed at right angles to the lines. High voltage towers (34.5kV and higher) must be located off railroad right of way.

5. For proposed electrical lines paralleling tracks, BNSF may request that an inductive interference study be performed at the expense of the utility owner. Inductive interference from certain lines have the potential to disrupt the signal system in the track causing failures in the track signals and highway grade crossing warning devices. The General Director of Signals will determine the need for a study on a case-by-case basis.

C. Underground Installations

1. Underground utility installations should be located on top of the back slope at the outer limits of the railroad property.

2. If the pipeline is located forty (40) feet or less from centerline of track, the pipeline shall be encased in a steel pipe subject to approval from BNSF. No pipe may be placed closer than twenty-five (25) feet from centerline of track. Pipe must be buried with a minimum cover of three (3) feet.

   a. If less than minimum depth is necessary because of existing utilities, water table, ordinance or similar reasons, the line shall be rerouted.

   b. Locations where it will be difficult to attain minimum depth due to wet or rocky terrain shall be avoided. Any location change from plan must be approved by BNSF.

3. The use of plastic carrier pipe for sewer, water, natural gas and other liquids is acceptable under specific circumstances. The use of plastic pipe is satisfactory if the pipe is designed to meet AREMA and all applicable federal and state codes, and if the carrier pipe is properly encased with a steel casing pipe for the entire length on BNSF right of way.

4. Manholes shall be limited to those necessary for installation and maintenance of underground lines. Manholes vary as to size and shape depending on the type of utility they serve. To conserve space, their dimensions should be minimally acceptable by good engineering and safety standards. In general, the only equipment to be installed in manholes located on railroad property is that which is essential to the normal flow of the utility, such as circuit reclosers, cable splices, relays, valves and regulators. Other equipment should be located outside the limits of the railroad property. Manholes shall not protrude above the surrounding ground nor be located in the shoulder, shoulder slope, ditch, backslope, or within twenty-five (25) feet of the centerline of track without approval of BNSF.

5. Electric Power Lines

   a. A minimum depth of 3.0 feet below natural grade (BNG) will be maintained for 750 volts and less, and 4.0 feet BNG for greater than 750 volts.

   b. A 6-inch wide warning tape will be installed, 1.0 foot BNG directly over the underground power line where located on Railroad right-of-way outside the track ballast sections.

6. Fiber Optic Lines

   a. A minimum depth of 4.0 feet BNG for fiber optic cable wirelines.

   b. Whenever feasible, all cable should be laid within 5 feet from property lines.

   c. A 6-inch wide warning tape will be installed, 1.0 foot BNG directly over the underground fiber optic line where located on Railroad right-of-way outside the track ballast sections.

D. Attachment to Bridges and Other Structures

The Utility Owner will not be permitted to attach to BNSF bridges or route facilities through drainage structures or cattle passes. Utilities are not to be attached to other railroad structures without the written approval of BNSF Structures Department. As a general rule, overhead power, communication and cable television line crossings at bridges must be avoided. Pipelines laid longitudinally on railroad property shall be located as far as practical from any tracks or other important structures. If located within forty (40) feet of the centerline of any track, the carrier pipe shall be encased or be of special design as approved by BNSF Engineering.

****

PART 3

UTILITIES CROSSING

RAILROAD PROPERTY

****

PART 3 - UTILITIES CROSSING RAILROAD PROPERTY

A. General Provisions

This section of the policy applies to all public and private utilities, including electric power, telephone (including fiber optics), telegraph, cable television, water, gas, oil, petroleum products, steam, chemicals, sewage, drainage, irrigation and similar lines that are located, adjusted or relocated within the property under the jurisdiction of BNSF. Such utilities may involve underground, surface or overhead facilities.

Installations crossing the property of the railroad, to the extent feasible and practical, are to be perpendicular to the railroad alignment and preferably at not less than forty-five (45) degrees to the centerline of the track. Utilities shall not be placed within culverts or under railroad bridges, buildings or other important structures.

Utilities will be located so as to provide a safe environment and shall conform to the current "National Electrical Safety Code," "American Waterworks Association Specifications," Federal Pipeline Safety Regulations," and "The American Railway Engineering and Maintenance Association Specifications." Where laws or orders of public authority prescribe a higher degree of protection, then the higher degree of protection prescribed shall supersede the provisions of this manual.

B. Overhead Installations

1. Minimum four feet clearance required above signal and communication lines.

2. Poles must be located 50 feet out from the centerline of railroad main, branch and running tracks, CTC sidings, and heavy tonnage spurs. Pole location adjacent to industry tracks; must provide at least a 10-foot clearance from the centerline of track, when measured at right angles. If located adjacent to curved track, then said clearance must be increased at a rate of 1-½ inches per degree of curved track.

3. Regardless of the voltage, unguyed poles shall be located a minimum distance from the centerline of any track, equal to the height of the pole above the ground-line plus 10 feet. If guying is required, the guys shall be placed in such a manner as to keep the pole from leaning/falling in the direction of the tracks.

4. Poles (including steel poles) must be located a minimum distance from the railroad signal and communication line equal to the height of the pole above the ground-line or else be guyed at right angles to the lines. High voltage towers (34.5kV and higher) must be located off railroad right of way.

5. Crossings will not be installed under or within 500 feet of the end of any railroad bridge, or 300 feet from the centerline of any culvert or switch area.

6. Complete spanning of the property is encouraged with supportive structures and appurtenances located outside railroad property. For electric supply lines, normally the crossing span shall not exceed 150 feet with adjacent span not exceeding 1-1/2 times the crossing span length. For communication lines, the crossing span shall not exceed 100 feet in heavy loading districts, 125 feet in medium loading districts, and 150 feet in light loading districts; and the adjacent span shall not exceed 1-1/2 times the crossing span length. For heavier type construction, longer spans will be considered.

7. Joint-use construction is encouraged at locations where more than one utility or type of facility is involved. However, electricity and petroleum, natural gas or flammable materials shall not be combined. Pipe truss design and layout will need to be reviewed and approved by BNSF Engineering.

8. To ensure that overhead wire crossings are clear from contact with any equipment passing under such wires, communication lines shall be constructed with a minimum clearance above top of rail of twenty-four (24) feet, and electric lines with a minimum clearance of twenty-six and one-half (26 1/2) feet or greater above top of rail when required by the "National Electric Safety Code" or state and local regulations. Electric lines must have a florescent ball marker on low wire over centerline of track.

9. The utility owner will label the posts closest to the crossing with the owner's name and telephone number for emergency contact.

10. All overhead flammable and hazardous material lines will need BNSF Engineering approval, but should be avoided if possible.

11. For proposed electrical lines crossing tracks, BNSF may request that an inductive interference study be performed at the expense of the utility owner. Inductive interference from certain lines have the potential to disrupt the signal system in the track causing failures in the track signals and highway grade crossing warning devices. The General Director of Signals will determine the need for a study on a case-by-case basis.

C. Underground Installations

1. General

   a. All underground utility crossings of railroad trackage shall be designed to carry Cooper's E-80 Railroad live loading with diesel impact (AREMA Cooper's loading Section 8-2-8). This 80,000-lb. axle load may be distributed laterally a distance of three (3) feet, plus a distance equal to the depth from structure grade line to base of rail, on each side of centerline of single tracks, or centerline of outer track where multiple tracks are to be crossed. In no case shall railroad loading design extend less than ten (10) feet laterally from centerline of track. Longitudinally, the load may be distributed between the five-foot axle spacing of the Cooper configuration. Railroad loading criteria will also apply

where future tracks on BNSF are contemplated, to the extent this information is available.

b. All utility crossings under ditches and railroad trackage should have a minimum depth of cover of three (3) feet below the flow line of the ditch or ground surface and five and one-half (5-1/2) feet from base of rail. In fill sections, the natural ground line at the toe of slope will be considered as ditch grade. The depth of cover shall not be less than that meeting applicable industry standards.

c. For all boring and jacking installations under main and passing tracks, greater than 26 inches in diameter, and at a depth of between 5.5 and 10.0 feet below top of tie, a geotechnical study will need to be performed to determine the presence of granular material and/or high water table elevation, at the sole expense of the Permittee. The study will include recommendations and a plan for a procedure to prevent failure and a collapse of the bore. Generally, core samples are to be taken near the ends of tie at the proposed location, at least as deep as the bottom of the proposed horizontal bore. Test results must be reviewed and approved by BNSF, or its agent, prior to boring activities commencing. BNSF reserves the rights, based on test results, to require the Permittee to select an alternate location, or to require additional engineering specifications be implemented, at the sole expense of the Permittee, in order to utilize existing location.

d. The use of plastic carrier pipe for sewer, water, natural gas and other liquids is acceptable under specific circumstances. The use of plastic pipe is satisfactory if the pipe is designed to meet all applicable federal and state codes, and if the carrier pipe is properly encased within a steel casing pipe per AREMA standards. This casing must extend the full width of the right of way. Casing may be omitted only for gaseous products if the carrier pipe is steel and is placed ten (10) feet minimum below the base of rail per AREMA standards.

2. General Design and Construction Requirements

a. If the minimum depth is not attainable because of existing utilities, water table, ordinances, or similar reasons, the line shall be rerouted.

b. Locations that are considered unsuitable or undesirable are to be avoided. These include deep cuts and in wet or rocky terrain or where it will be difficult to obtain minimum depth.

c. Underground installations may be made by open-trenching from the property line to the toe of the fill slope in fill sections and to the toe of the shoulder slope in cut sections but to no closer than thirty (30) feet of the centerline of track. The remainder will be tunneled, augured, jacked or directional-bored through the roadbed. Refer to the following sections for required encasement of utilities and boring requirements.

d. Manholes should be located outside railroad property, when possible. No manhole will be located in the shoulder, shoulder slope, ditch or backslope, or within twenty-five (25)

feet of the centerline of track, and shall not protrude above the surrounding ground without approval of BNSF.

e. Utilities will not be attached to or routed through drainage structures or cattle passes. Utilities are not to be attached to other railroad structures without written approval of the BNSF Structures Department.

f. Jacking pits shall be located a minimum of thirty (30) feet from the centerline of track.

3. Pipeline Requirements

a. Pipeline designs are to specify the type and class of material, maximum working pressures and test and design pressure. Pipelines which are not constructed, operated and maintained under regulations established under US Department of Transportation Hazardous Materials Regulations Board, shall upon revisions in the class of material or an increase in the maximum operating pressure, must obtain BNSF Engineering approval.

b. Pipelines carrying oil, liquefied petroleum gas, natural or manufactured gas and other flammable products shall conform to the requirements of the current AREMA, ANSI/ASME B 31.4 Code for pressure piping - Liquid Petroleum Transportation Piping Systems; ANSI B 31.8 Code for pressure piping - Gas Transmission and Distribution Piping Systems; other applicable ANSI codes and 49 C.F.R. Part 192 or Part 195 - Transportation of Hazardous Liquids by Pipeline, except that the maximum allowable stress of design of steel pipe shall not exceed the following percentages of the specified minimum yield strength (multiplied by longitudinal joint factor) of the pipe as defined in the ANSI codes.

c. Pipelines under railroad tracks and across railroad property shall be encased in a larger pipe or conduit called "casings." Generally, casings shall extend from right-of-way line to right-of-way line, unless otherwise approved.

d. Pipelines and casing pipes shall be suitably insulated from underground conduits carrying electric wires on railroad property.

e. Reinforced concrete pipe will need to be encased for a distance as wide as the embankment at the utility crossing. This is to protect against track failure due to joint separation.

4. Encasement of Utilities

a. Casings are oversized load-bearing conduits or ducts through which a utility is inserted:

1) To protect the railroad from damages and to provide for repair, removal and replacement of the utility without interference to railway traffic.

2) To protect the carrier pipe from external loads or shock, either during or after construction.

3) To convey leaking fluids or gases away from the area directly beneath the railroad trackage to a point of venting at the railroad property line.

b. Casings may be omitted for **gaseous products only** under the following circumstances:

1) Carrier pipe must be steel and the wall thickness must conform to E-80 loading for casing pipe shown in the tables as included in the AREMA manual Chapter 1, Part 5 for Pipeline Crossings. The length of thicker-walled pipe shall extend from railroad right-of-way line to right-of-way line. This will generally result in thicker-walled pipe on railroad right-of-way.

2) All steel pipe shall be coated and cathodically protected.

3) The depth from base of rail to top of pipe shall not be less than ten (10) feet below base of rail. The depth from ditches or other low points on railroad right-of-way shall not be less than six (6) feet from ground line to top of pipe.

c. In circumstances where it is not feasible to install encasement from right-of-way line to right-of-way line, casing pipe under railroad tracks and across railroad property shall extend to the greater of the following distances, measured at right angles to the centerline of track:

1) Two (2) feet beyond toe of slope.

2) Three (3) feet beyond ditch line.

3) Twenty-five (25) feet from centerline of outside track when casing is sealed at both ends.

4) Forty-five (45) feet from centerline of outside track when casing is open at both ends.

5) If additional track is planned for future construction, casing must extend far enough to meet above distances given the additional track requirement.

d. Pipelines and casing pipe shall be suitably insulated from underground conduits carrying electric wires on railroad property.

e. Casing pipe and joints shall be made of metal, and of leakproof construction. Casings shall be capable of withstanding the railroad loadings and other loads superimposed upon them.

f. Wall thickness designations for steel casing pipe for E-80 loading (including impact) are:

Nominal Diameter, (Inches)	Min. Thickness for Coated (Inches)	Non Coated (Inches)
14 and Under	0.188	0.188
16	0.219	0.281
18	0.250	0.312
20 and 22	0.281	0.344
24	0.312	0.375
26	0.344	0.406
28	0.375	0.438
30	0.406	0.469
32	0.438	0.500
34 and 36	0.469	0.531
38, 40 and 42	0.500	0.563
44 and 46	0.531	0.594
48	0.563	0.625
50	0.594	0.656
52	0.625	0.688
54	0.656	0.719
56 and 58	0.688	0.750
60	0.719	0.781
62	0.750	0.813
64	0.718	0.844
66 and 68	0.813	0.875
70	0.844	0.906
72	0.875	0.938

1) Steel pipe shall have minimum yield strength of 35,000 pounds per square inch.

2) All metallic casing pipes are to be designed for effective corrosion control, long service life and relatively free from routine servicing and maintenance. Corrosion control measures must include cathodic protection.

3) Cast iron may be used for casing. It shall conform to ANSI A21. The pipe shall be connected with mechanical-type joints. Plain-end pipe shall be connected with compression-type couplings. The strength of the cast iron pipe to sustain external loads shall be computed in accordance with the most current ANSI A21.1 "Manual for the Computation of Strength and Thickness of Cast Iron Pipe."

g. The inside diameter of the casing pipe shall be such that the carrier pipe can be removed without disturbing the casing. All joints or couplings, supports, insulators or centering devices for the carrier pipe shall be considered in the selection of the casing diameter.

h. For flexible casing pipe, a minimum vertical deflection clearance of the casing pipe shall be three percent (3%) of its diameter plus one-half (1/2) inch so that no loads from the roadbed, track, railroad traffic or casing pipe are transmitted to the carrier pipe. When insulators are used on the carrier pipe, the relationship of the casing size to the size of the carrier pipe is:

Diameter of Carrier Pipe	Inside Dia. of Casing Pipe Equals Outside Dia. of Carrier Pipe Plus
0" - 8"	2"
10" - 16"	3-1/4"
Over 16"	4-1/2"

5. Casing and Pipeline Installation

a. Casing and pipeline installations should be accomplished by directional boring, jack-and-bore, tunneling or other approved methods. Tunneling construction under tracks will be permitted only under direct supervision of a BNSF Engineer. Tunneling procedures and equipment, as well as structural design, must have BNSF Structures Department approval prior to starting any work on BNSF property. Generally, tunneling shall not be considered where less than six (6) feet of cover exists, or where excessively sandy, loose or rocky soils are anticipated.

Rail elevations over the work must be monitored at intervals prescribed by BNSF to detect any track movement. Movements of over one-quarter (1/4) inch vertically shall be immediately reported to the BNSF Roadmaster. Due to the danger to rail traffic that is caused by only small amounts of track movement, BNSF forces may have to be called to surface the track several times.

The following requirements shall apply to these construction methods:

1) The use of water under pressure jetting or puddling will not be permitted to facilitate boring, pushing or jacking operations. Some boring may require water to lubricate cutter and pipe, and under such conditions, is considered dry boring.

2) Where unstable soil conditions exist, boring or tunneling operations shall be conducted in such a manner as not to be detrimental to the railroad being crossed.

3) If excessive voids or too large a bored hole is produced during casing or pipeline installations, or if it is necessary to abandon a bored or tunneled hole, prompt remedial action should be taken by the Utility Owner.

4) All voids or abandoned holes caused by boring or jacking are to be filled by pressure grouting. The grout material should be sand cement slurry with a minimum of two (2) sacks of cement per cubic yard and a minimum of water to assure satisfactory placement.

5) The hole diameter resulting from bored or tunneled installations shall not exceed the outside diameter of the utility pipe, cable or casing (including coating) by more than one and one-half (1-1/2) inches for pipes with an inside diameter of twelve (12) inches or less, or two (2) inches on pipes with an inside diameter greater than twelve (12) inches.

6) Pits for boring, tunneling or jacking will not be permitted within thirty (30) feet of the centerline of track; or closer to the track than the toe of fill slopes in fill sections, or toe of shoulder slopes in ditch sections when pipes are allowed on the railroad property.

c. Vents. In casing pipe installations, vents are appurtenances by which fluids or gases between carrier and casing may be inspected, sampled, exhausted or evacuated.

1) Vents shall be located at the high end of short casings and at both ends of casing longer than one hundred fifty (150) feet.

2) Vent standpipes shall be located and constructed so as not to interfere with maintenance of the railroad or to be concealed by vegetation. Where possible, they shall be marked and located at the property line. The markers shall give the name and address of the owner, and a phone number to contact in case of emergency.

3) Casing pipe, when sealed, shall be properly vented. Vent pipes shall be of sufficient diameter, but in no case less than two (2) inches in diameter and shall be attached near each end of casing, projecting through ground surface at property lines.

4) Vent pipes shall extend not less than four (4) feet above ground surface. Top of vent pipes shall be fitted with a down-turned elbow, properly screened; or a relief valve.

5) For pipelines carrying flammable materials, vent pipes on casings shall be at least 16 feet (vertically) from aerial electric wires. Casings shall be suitably insulated from underground conduits carrying electric wires on Railroad right-of-way.

d. Shut-Off Valves

1) The Utility Owner shall install accessible emergency shut-off valves within effective distances on each side of the railroad. Where pipelines are provided with automatic control stations, no additional valves will be required.

2) Locating a shut-off valve on railroad property should be avoided. If approval is acquired, a guardrail must protect the shut-off valve.

3) When a guardrail is required, its height shall be four (4) feet above the ground line. All four corner posts shall be driven to a minimum depth of four (4) feet below ground line. There shall be a minimum clearance of two (2) feet from the valve to the

guardrail. The steel pipes for the four corner posts and guardrail shall have a minimum diameter of four (4) inches. All joints will be welded with a one-quarter (1/4) inch fillet weld all around.

6. Water Lines

   a. Where casing pipe is used, venting is not required; however, sealing will be required if the ends of the casing are not above high water.

   b. Where non-metallic pipe is permitted and installed, steel casings are required from right of way line to right of way line.

   c. Manholes should be located outside the railroad property. Manholes shall not be located within twenty-five (25) feet of railroad trackage, in the shoulder, shoulder slope, ditch or backslope; and shall not protrude above the surrounding ground without the approval of BNSF Engineering.

   d. The Utility Owner shall place a readily identifiable and suitable marker at each railroad property line where it is crossed by a water line.

7. Sewer Lines

   a. New and relocated sewer lines shall be constructed with satisfactory joints, materials and designs which will provide protection and resistance to damage from sulfide gases and other corrosive elements to which they may be exposed.

   b. Where casing pipe is used, venting and sealing of casing will be required.

   c. Where non-metallic pipe is permitted and installed, a durable metal wire shall be concurrently installed; or other means shall be provided for detection purposes.

   d. Manholes should be located outside the railroad property. Manholes shall not be located within twenty-five (25) feet of railroad trackage, in the shoulder, shoulder slope, ditch or backslope; and shall not protrude above the surrounding ground without the approval of BNSF Engineering.

8. Electric Power Lines

   a. A minimum depth of 5.5 feet below the base of rail (BBR) will be maintained.

   b. A minimum depth of 3.0 feet below natural grade (BNG) will be maintained for 750 volts and less, and 4.0 feet BNG for greater than 750 volts.

   c. The wireline must be encased completely across the Railroad right-of-way with a rigid metallic conduit.

d. Crossings will not be installed under or within 50 feet of the end of any Railroad bridge, centerline of any culvert or switch area.

e. A BNSF signal representative must be present during installation if railroad signals are in the vicinity of wireline crossings unless signal representative authorizes otherwise.

f. Markers that identify the Utility Owner shall be placed at both property lines for utilities crossing the railroad property. For parallel lines markers shall be placed above the cable at intervals no less than 300' apart. The markers should identify the owner, type of cable and emergency telephone number. A 6-inch wide warning tape will be installed, 1.0 foot BNG directly over the underground power line where located on Railroad right-of-way outside the track ballast sections.

g. Above-ground utility appurtenances installed as a part of an underground installation shall be located at or near the railroad property line and shall not be any closer than twenty-five (25) feet to the centerline of track.

9. Fiber Optic Lines.

a. The same requirements for electric power line crossings will apply for fiber optic line crossings except for the following:

b. A minimum depth of 4.0 feet BNG for fiber optic cable wirelines.

c. BNSF Engineering must approve any specialized equipment used to install cable. No rail plow will be allowed for installation purposes.

****

PART 4

PLANS, APPROVALS AND PROCEDURES

****

PART 4 - PLANS, APPROVALS AND PROCEDURES

A. Plans and Approvals

1. Design

   a. The design of all utility installations will be the responsibility of the Utility Owner.

   b. The plans for the proposed installation shall be submitted to and meet the approval of BNSF Engineering before construction is initiated.

   c. Plans shall be drawn to scale showing the relationship of the proposed utility line to the railroad tracks, the angle of crossing, location of valves and vents, the railroad mile post and engineering station, railroad property lines and general layout of tracks and other railroad facilities. The plans should include a cross-section (or sections) from the field survey that will show utility placement in relation to actual profile of ground and tracks. If tunneling is proposed, method of supporting tracks or driving of tunnel shall be shown. The geotechnical study, when required, should be included.

   d. The plans should contain the following data for carrier pipe and casing pipe:

      Contents to be carried
      Inside diameter
      Pipe material
      Specifications and grade of material
      Wall thickness
      Actual working pressure
      Type of joints
      Longitudinal joint factor
      Coating
      Method of installation
      Vents-Number, Size, Height above ground
      Seals-Both ends, One end
      Cover (top of tie to top of pipe or casing)
      Cover (other than under tracks)
      Cover (at ditches)
      Cathodic protection
      Type, Size and Spacing of insulators or supports

   e. When a geotechnical study is required, the findings and protection plan shall be prepared by a licensed civil engineer and included with the plans. The geotechnical crew will need to be properly permitted to enter BNSF right-of-way and a BNSF flagman will be required when working within 25 feet of the track.

2. Approvals

a. Approval of plans and application forms is required for all installations of utilities prior to initiation of work on railroad property.

b. If surveying is necessary for the completion of an application, a "Right of Entry" or "Release of Claim and Indemnity" must be executed and referenced.

B. License Procedures

1. Applications should be submitted to:

   Staubach Global Services
   Permits Department
   3017 Lou Menk Drive, Suite 100
   Fort Worth, TX 76131-2800

2. Upon receipt of the application, a letter will be forwarded acknowledging receipt and advising of the Permit & Contract file reference number that has been assigned and the person who should be contacted for further inquiries.

3. Office Hours: 8:00 A.M. to 5:00 P.M. Monday through Friday, CT
   Phone Number: (toll free) 866-498-6647.

4. Agreements will be required for all encroachments on railroad property.

5. Generally, agreement-processing time will be thirty to sixty days. Please allow sufficient lead-time for document handling prior to desired construction date. Before construction begins, agreements must be executed by Utility Owner and returned. Verbal authorizations will not be granted or permitted. A minimum of seventy-two (72) hours advance notice after execution of an agreement will be required prior to initiation of construction.

6. License fees must be submitted at the time the agreement is executed and returned.

7. Applications are to be made on the standard application form including an Exhibit "A."

C. Construction

1. The execution of the work on railroad property shall be subject to the inspection and direction of the Roadmaster or his representative.

2. A representative of BNSF Signal Department must be present during installation if railroad signals are in the vicinity of the construction.

****

PART 5

APPENDIX

****

REFERENCES

American National Standards Institute (ANSI) Codes, 1430 Broadway, NY, NY 10018.

American Railway Engineering and Maintenance of Way Association (AREMA) Specifications.

American Society for Testing and Materials (ASTM) Specifications.

American Water Works Association Standards and Specifications, AWWA, 2 Park Avenue, NY, NY 10016.

Manual on Uniform Traffic Control Devices - with revisions, US Department of Transportation, Federal Highway Administration.

National Electrical Safety Code, US Department of Commerce, National Bureau of Standards.

Pipeline Safety Regulations - Code of Federal Regulations, Tile 49 - Transportation, Parts 191-192-Natural Gas; Part 195-Liquid Petroleum Gas.

Rules and Regulations for Public Water Systems - latest edition, State Health Departments.

Rules and Regulations promulgated by the Hazardous Materials Regulation Board of the US Department of Transportation.

Statutory Provisions, 23 U.S.C. 109 and 111.

DEFINITION OF TERMS

The terminology used in this Policy strives for conventional meaning and to insure uniform interpretation. To this end, the following definitions apply:

ACCESS CONTROL: Restriction of access to and from abutting lands to railroad property.

AREMA: American Railroad Engineering and Maintenance of Way Association.

ANSI: American National Standard Institute.

ASTM: American Society for Testing and Materials.

BACKFILL: Replacement of soil around and over an underground utility facility.

BORING: Piercing a hole under the surface of the ground without disturbing the earth surrounding the hole. Boring may be accomplished by any approved manner. Water jetting or puddling will not be permitted. Holes may be mechanically bored and cased using a cutting head and continuous auger mounted inside of the casing. Small diameter holes may be augured and the casing or utility facility pushed in later.

BNSF: Burlington Northern and Santa Fe Railway Company.

BURY: Placement of the utility facility below grade of roadway, ditch or natural ground to a specified depth.

CARRIER: Pipe directly enclosing a transmitted fluid (liquid or gas).

CASING: A larger pipe enclosing a carrier.

CFR: Code of Federal Regulations.

COATING: Material applied to or wrapped around a pipe.

COMMUNICATION LINE: Fiber optic, telephone cable and similar lines, not exceeding four hundred (400) volts to ground or seven hundred fifty (750) volts between any two (2) points of the circuit, the transmittal power of which does not exceed one hundred fifty (150) watts.

CONDUIT OR DUCT: An enclosed tubular runway for protecting wires or cables.

COVER: The depth of material placed over a utility. Depth of cover is measured from top of utility casing or carrier pipe (if no casing is required) to the natural ground line or construction line above the utility.

DIRECT BURIAL: Installing a utility underground without encasement, by plowing or trenching. No rail plows will be permitted.

ELECTRIC SUPPLY: Electric light, power supply, and trolley lines, irrespective of voltage used for transmitting a supply of electrical energy.

ENCASEMENT: Structural element surrounding a pipe or cable.

FLEXIBLE PIPE: A plastic, fiberglass, or metallic pipe having a large ration of diameter to wall thickness that can be deformed without undue stress. Copper or aluminum pipe shall be considered as flexible pipe.

GROUNDED: Connected to the earth or to some extended conducting bodies which intentionally or accidentally is connected with the earth.

GROUT: A cement mortar or slurry of fine sand or clay as conditions govern.

JACK-AND-BORE: The installation method whereby the leading edge of the jacked pipe is well ahead of the cutting face of the auger bit. The auger is removing waste from inside the pipe as it is being jacked. This method greatly reduces the likelihood of subsidence of granular material during installation.

JACKING: The installation of small pipes by the use of hydraulic jacks or rams to push the pipe under the traveled surface of a road, railroad roadbed, or other facility.

LICENSE:

UTILITY LICENSE AGREEMENTS are executed for all utility facilities located on railroad property.

MANHOLE: An opening to an underground utility system which workmen or other may enter for the purpose of maintaining, inspecting, or making installations.

NATURAL GAS PIPELINES:

DISTRIBUTION SYSTEM - A pipeline other than a gathering or transmission line.

SERVICE LINE - A distribution line that transports gas from a common source of supply to a customer meter.

TRANSMISSION SYSTEM - A pipeline other than a gathering line that transports gas from a gathering line or storage facility to a distribution center or storage facility. It operates at a hoop stress of twenty percent (20%) or more of the Specified Minimum Yield Strength.

NORMAL: Crossing at a right angle.

PERMITS:

PERMIT TO BE ON BNSF PROPERTY FOR UTILITY SURVEY is to be executed prior to all survey work on railroad property.

PIPE: A tubular product made as a production item for sale as such. Cylinders formed from plate in the course of fabrication of auxiliary equipment are not pipes as defined here.

PRESSURE: Relative internal pressure in PSI (pounds per square inch) gauge.

PRIVATE LINES: Any privately owned facilities which convey or transmit the commodities outlined under the definition for Utilities but are devoted exclusively to private use.

PUBLIC LINES: Those facilities which convey or transmit the commodities outlined under the definition for Utilities and directly or indirectly serve the public or any part thereof.

RIGHT OF WAY: A general term denoting land, property of interest therein, usually in a strip, acquired for or devoted to railroad transportation purposes.

SEAL: A material placed between the carrier pipe and casing to prevent the intrusion of water, where ends of casing are below the ground surface.

SHOULDER: That portion of the roadbed outside the ballast.

TRENCHED: Installed in a narrow excavation.

TUNNELING: Excavating the earth ahead of a large diameter pipe by one or more of the following processes: 1) The earth ahead of the pipe will be excavated by men using hand tools while the pipe is pushed through the holes by means of jacks, rams or other mechanical devices, 2) The excavation is carried on simultaneously with the installation of tunnel liner plates, and/or 3) The tunnel liner plates are installed immediately behind the excavation as it progresses and are assembled completely away from the inside.

UTILITY OWNER: All privately, publicly or cooperatively owned lines, facilities and systems for producing, transmitting or distributing communications, power, electricity, light, heat, gas, oil, crude products, water, steam, waste, storm water and other similar commodities, including fire and police signal systems and street lighting systems which directly or indirectly serve the public.

APPLICANT'S PIPELINE CROSSING CHECKLIST

Installation must comply with Standard Specifications.

Installation is located at least fifty (50) feet from the end of any railroad bridge or centerline of any culvert.

Steel casing must extend completely across railroad property if carrier pipe is made of plastic.

Approval for installation may be given if pipeline is uncased and commodity is gaseous and the carrier pipe is made of steel, buried a minimum of ten (10) feet below base of rail and six (6) feet below ground line for its entire length across railroad property.

A BNSF Signal representative may be present during installation if railroad signals are in vicinity of installation, unless plans have been approved prior to installation.

Applications and Policy are available on-line at:

http://www.bnsf.com/tools/realestate/

Date: _____

APPLICATION FOR PIPE LINE CROSSING OR LONGITUDINAL

The Staubach Company
Permit Department
3017 Lou Menk Dr., Ste. 100
Fort Worth, TX 76131-2800

APPLICANT'S TAX I.D. NO./SS#_____

***ATTN**: Permit Specialist for _____(State)*

We submit for your approval the following specifications for a pipe line we propose to build across **THE BURLINGTON NORTHERN AND SANTA FE RAILWAY COMPANY** right-of-way, as shown on enclosed sketch.

Legal name of company or municipality who will own the pipeline _____
State in which incorporated _____
If not incorporated, correct name of owners or all partners: _____
Correct mailing address _____ Zip Code _____
Type of Encroachment: Crossing _____ Longitudinal _____ Telephone _____
Location of encroachment _____ 1/4 Sec _____ Twsp _____ Rng _____ MP _____ + _____
Name of nearest town on Railroad _____ County _____ State _____
Name of nearest roadway crossing Railroad _____
Within limits of public road or street ☐ Yes ☐ No **If yes, distance from center line of road or street** _____ **ft.**
Width of public road or street _____ **ft.**

	CARRIER	CASING
Contents to be handled through pipe	_____	_____
Emergency Contact: _____	**Emergency Telephone:**	_____
Length of pipe on Railroad Co. property (Plastic pipe must be encased full width of right of way)	_____ ft.	_____ ft.
Inside diameter of pipe	_____ in.	_____ in.
Pipe Material	_____	_____
Specification & grade (Min. yield strength casing 35,000 psi.)	_____	_____
Wall Thickness (Min. wall thickness of casing pipe under 14 in.-0.188 in. E-80 Loading)	_____ in.	_____ in.
Actual working pressure	_____ psi	
Type of joint - (mechanical or welded type)	_____	_____
Longitudinal Joint Factor	_____	
Coating	_____	_____
Distance Base of rail to top of pipe	_____	_____
(Flammable, contents, steam, water or non-flammable - min. 5 1/2 ft. under main track.)		
(Uncased, gaseous products - min. 10' under track)		
Minimum ground cover on Railroad Co. property (min. 3 ft.)	_____	_____
Cathodic protection casing-(flammable substance)	_____	_____

Type of insulators or supports _____ Size _____ Space _____
Number of vents _____ Size _____ Height above ground _____
(Flammable substances require 2 vents)
Method of crossing: Jacking _____ Trench _____ Dry Bore Only _____
(If trenched - Railroad furnish flagman at applicant's expense.)
(If bored or jacked - Jacking Pit location minimum 30 ft. from centerline of nearest track.) Pit must not be open more than 48 hours. Also, it must be protected when not in use.
Does pipeline support oil or gas well? ☐ Yes ☐ No
If yes, advise distance the well is from Railway property - _____ ft. Name of well _____
Was this service requested by BNSF? Yes or No (circle one) If yes, who requested _____
Telephone # of Requestor _____**.**

Attached to this sheet is location plan and detail sketch. Sketch shows tie-down measurement to centerline of nearest road crossing, bridge or other railroad structure. Please authorize us to proceed with this installation or advise what changes are necessary to meet your specifications.

Signed: _____
Print Name: _____
Title: _____
Telephone: _____

April 16, 2004

Date: _____

APPLICATION FOR WIRE LINE CROSSING OR LONGITUDINAL

The Staubach Company
Permit Department
3017 Lou Menk Dr., Ste. 100
Fort Worth, TX 76131-2800

TAX I.D. NO./SS# _____

***ATTN**: Permit Specialist for _____(State)*

We submit for your approval the following specifications for a wire line we propose to build across **THE BURLINGTON NORTHERN AND SANTA FE RAILWAY COMPANY** Right-of-way, as shown on enclosed drawing.

Legal name of company or municipality who will own the wireline _____
State in which incorporated _____
If not incorporated, correct name of owners or all partners: _____
Correct mailing address _____ Zip Code _____
Telephone _____
Location of crossing _____ 1/4 Sec _____ Twsp _____ Rng _____
Name of nearest town on Railroad _____ State _____
Type of Encroachment: Crossing ____ Longitudinal ____ Railroad Mile Post _____
Name of nearest public roadway crossing Railroad _____ County _____
Within limits of public road or street? ☐ Yes ☐ No **If yes, distance from center line of road or street _____ ft.**
Width of public road or street ____ ft.
Kind of encroachment: Electric _____ Telephone _____ Other _____
No. of wires/cables _____ Type of wires/cable _____ Volts _____ Phase _____ Cycles _____
No. of conduits _____ No. of occupied conduits _____ No. of vacant conduits _____
Length of encroachment _____ Adjacent spans _____ ft. _____ ft.
Appurtenances on Ry. Co. Property _____
Wire clearance over or under top of rail _____ ft. _____ ft.
If under track, size & kind of conduit _____
Wire clearance over Ry. Co. wire lines ft. ft.
Was this service requested by BNSF? Yes or No (circle one)
If yes, who requested? _____ Telephone: _____

Attached to this sheet is a pole head diagram (if required) and location plan. Location plan shows tie-down measurement to centerline of nearest road crossing, bridge or other railroad structure. Please authorize us to proceed with construction of this encroachment as proposed or advise what changes are necessary to meet your specifications.

Signed: _____

Print Name: _____

Title: _____

Telephone: _____

April 16, 2004

POLE HEAD AND DATA SHEET

This completed form to accompany application to construct a wire line on THE BURLINGTON NORTHERN AND SANTA FE RAILWAY COMPANY right-of-way.

Name of Company _____

Location of encroachment _____ ft. Sec. _____ Twsp. _____ Rng. _____

Nearest Town _____ County _____

POLES
Kind _____ Size _____
Height _____
Class _____
Set-in Earth-Rock _____

GUY WIRES
Overhead _____ Down _____
Kind _____ Size _____

CROSS ARMS
Material _____
Size _____ X _____ X _____

FRONT ELEVATION

INSULATORS
Material _____
Type _____ Size _____

BRACKETS
Material _____
Type _____ Size _____

CONDUCTORS
Material _____
Kind _____ Size _____

LINE CHARACTERISTICS

Voltage _____
Phase _____ Cycle _____

SIDE ELEVATION

Exhibit I

LACMTA Easement Area

EXHIBIT "D-2" Map LACMTA Easement

LINE TABLE		
LINE	BEARING	LENGTH
L1	S89°59'51"E	63.52'
L2	N48°00'00"W	186.56'
L3	N89°57'55"E	22.43'
L4	S48°00'00"E	186.54'
L5	N89°59'51"W	22.42'

VICINITY MAP
NOT TO SCALE

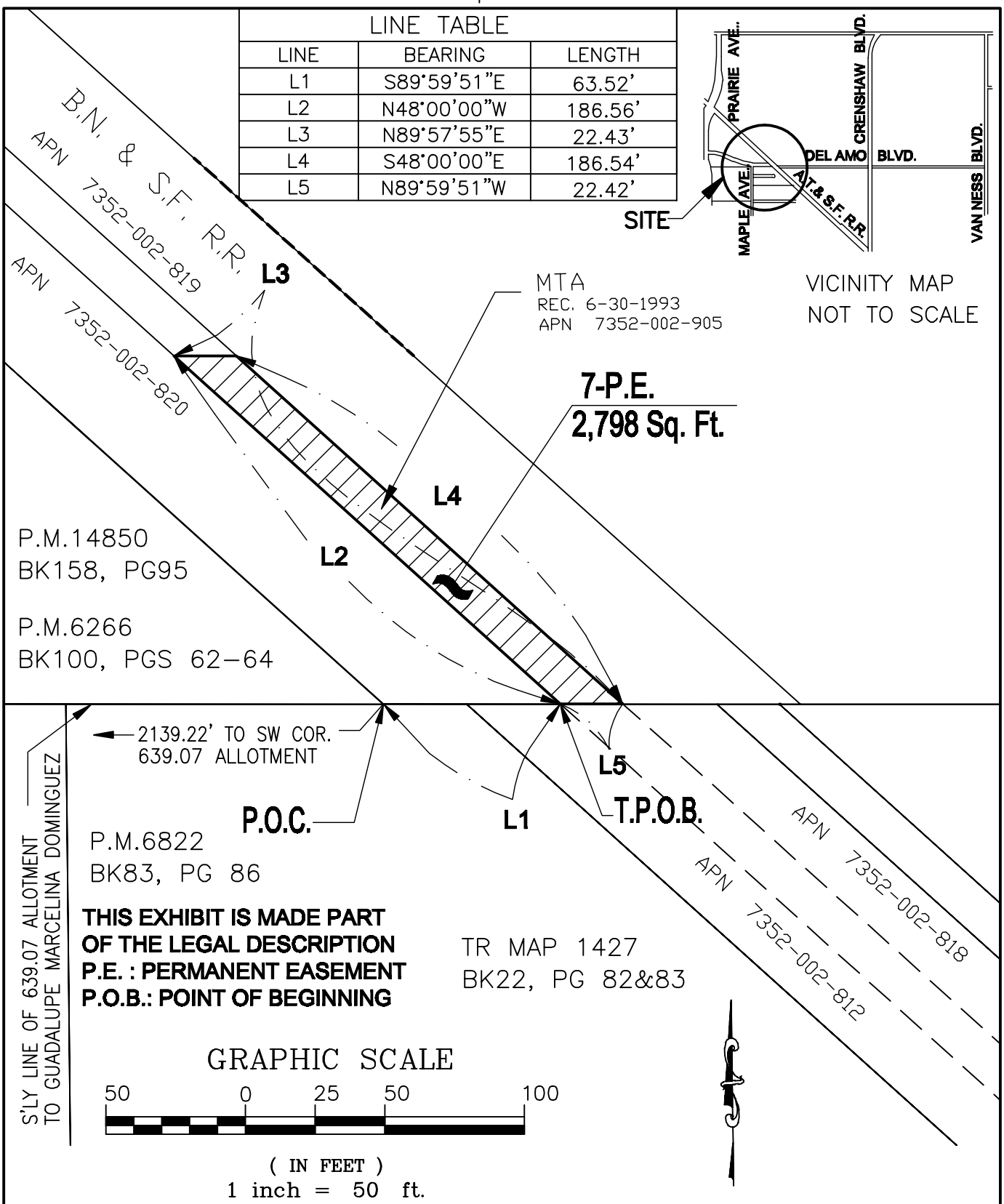

THIS EXHIBIT IS MADE PART OF THE LEGAL DESCRIPTION
P.E. : PERMANENT EASEMENT
P.O.B.: POINT OF BEGINNING

DEL AMO BOULEVARD EXTENSION **CITY OF TORRANCE**		**OWNER NAME : M.T.A.** **APN 7302-002-904**	**DATE:** 02-03-09
Paragon Partners Ltd. 5762 Bolsa Avenue, Ste. 201 Huntington Beach, CA 92649	CHECKED _____DATE	**CITY OF TORRANCE** **POR. 639.07 ACRE ALLOTMENT MADE TO** **GUADALUPE MARCELINA DOMINGUEZ** **COUNTY OF LOS ANGELES**	**SCALE:** AS SHOWN **DRAWN BY:** MAT **REV. DATE 5/24/6** REV. No1

PORTION OF APN. 7352-002-905

PARCEL 7-P.E.
PERMANENT DEL AMO BOULEVARD OVERHEAD EASEMENT

THAT PORTION OF THE 639.07 ACRE ALLOTMENT MADE TO GUADALUPE MARCELINA DOMINGUEZ BY THE DECREE OF PARTITION OF PORTION OF THE RANCHO SAN PEDRO, IN CASE No. 3284 OF THE SUPERIOR COURT OF THE COUNTY OF LOS ANGELES, DESCRIBED AS PARCEL No. 16 OF THAT CERTAIN DEED TO SANTA FE AND LOS ANGELES HARBOR RAILWAY COMPANY, RECORDED DECEMBER 26, 1924 IN BOOK 3817, PAGE 164 , OFFICIAL RECORDS, DESCRIBED IN SAID DEED AS A 15 FOOT STRIP OF LAND, LYING 7.5 FEET ON EACH SIDE, MEASURED FROM THE CENTERLINE OF SAID SANTA FE AND LOS ANGELES HARBOR RAILWAY COMPANY'S MAIN TRACK, BOUNDED AND DESCRIBED AS FOLLOWS:

COMMENCING TO A POINT ON THE SOUTHERLY LINE OF SAID ALLOTMENT, DISTANT 2139.22 FEET EASTERLY ALONG SAID SOUTHERLY LINE FROM THE SOUTHWEST CORNER THEREOF; THENCE ALONG SAID SOUTHERLY LINE SOUTH 89°59'51" EAST 63.52 FEET TO A **TRUE POINT OF BEGINNING** IN A LINE PARALLEL WITH AND 7.50 FEET SOUTHWESTERLY FROM SAID CERTAIN LOCATED CENTER LINE OF SANTA FE AND LOS ANGELES HARBOR RAILWAY COMPANY DESCRIBED IN SAID DEED; THENCE ALONG SAID PARALLEL LINE NORTH 48°00'00" WEST 186.51 FEET; THENCE NORTH 89°57'55" EAST, 22.43 FEET TO A LINE PARALLEL WITH AND 7.50 FEET NORTHEASTERLY FROM THE LOCATED CENTER LINE OF SAID SANTA FE AND LOS ANGELES HARBOR RAILWAY COMPANY; THENCE ALONG SAID PARALLEL LINE SOUTH 48°00'00" EAST, 186.50 FEET TO A POINT ON THE SOUTHERLY LINE OF SAID ALLOTMENT; THENCE ALONG SAID LINE NORTH 89°59'51" WEST, 22.42 FEET TO THE **TRUE POINT OF BEGINNING**.

CONTAINING 2,798 SQUARE FEET OR 0.069 ACRES MORE OR LESS.

SEE EXHIBIT "D-2" MAP ATTACHED HERETO AND BY REFERENCE MADE A PART HEREOF.

Prepared by
Paragon Partners Ltd.
5762 Bolsa Ave., Suite 201
Huntington Beach, CA 92649
714-379-3376

2-25-09

James M. Rushing — Date
R.C.E. 28219 — Exp. 03/31/10

REGISTERED PROFESSIONAL ENGINEER
JAMES MACLYN RUSHING
No. C28219
Exp. 3-31-10
CIVIL
STATE OF CALIFORNIA

Exhibit I-1

LACMTA Agreement with Contractor

EXHIBIT "C-2"

Agreement
Between
LOS ANGELES COUNTY METROPOLITAN TRANSPORTATION AUTHORITY
and the
CONTRACTOR

The Los Angeles County Metropolitan Transportation Authority
One Gateway Plaza
Los Angeles, California 90012
Attention: Manager Third Party Coordination

Gentlemen:

The undersigned, hereinafter referred to as Contractor, has entered into a Contract dated _____, 2009 with the City of Torrance for the performance of certain work in connection with the Del Amo Boulevard Grade Separation Project at M.P. 20.16 Harbor Subdivision in the performance of which work the Contractor will necessarily be required to conduct operations within the Los Angeles County Metropolitan Transportation Authority's (LACMTA) right of way and adjacent to LACMTA's track and appurtenances. The Contract provides that no work shall be commenced within LACMTA's right of way until the Contractor employed in connection with said work for City of Torrance shall have executed and delivered to LACMTA an Agreement, in the form hereof, and shall have provided insurance of the coverage and limits specified in said contract and Section 2 of this Agreement. If this Agreement is executed by other than the Owner, General Partner, President or Vice President of Contractor, evidence is furnished to you herewith certifying that the signatory is empowered to execute this Agreement for the Contractor.

Accordingly, as one of the inducements to and as part of the consideration for LACMTA granting permission to Contractor to enter upon LACMTA right of way, Contractor, effective on the date of said Contract, has agreed and does hereby agree with Railway as follows:

Section 1. RELEASE OF LIABILITY AND INDEMNITY

Contractor agrees to release LACMTA from any claims arising from the performance of this Agreement which Contractor or any of its employees, subcontractors, agents or invitees could otherwise assert against LACMTA, regardless of the negligence of LACMTA, except to the extent that such claims are proximately caused by the sole intentional misconduct or sole negligence of LACMTA.

Contractor shall indemnify and hold harmless LACMTA for all judgments, awards, claims, demands, and expenses (including attorney's fees, for injury or death to all persons, including LACMTA's and Contractor's officers and employees, and for loss and damage to property belonging to any person, arising in any manner from Contractor's or any of Contractor's subcontractors' acts or omissions or failure to perform any obligation hereunder. THE LIABILITY ASSUMED BY CONTRACTOR SHALL NOT BE AFFECTED BY THE FACT, IF IT IS A FACT, THAT THE DESTRUCTION, DAMAGE, DEATH, OR INJURY WAS OCCASIONED BY OR CONTRIBUTED TO BY THE NEGLIGENCE OF LACMTA. IT'S AGENTS, SERVANTS, EMPLOYEES OR OTHERWISE, EXCEPT TO THE EXTENT THAT SUCH CLAIMS ARE PROXIMATELY CAUSED BY THE SOLE INTENTIONAL MISCONDUCT OR SOLE NEGLIGENCE OF LACMTA.

THE INDEMNIFICATION OBLIGATION ASSUMED BY CONTRACTOR SHALL INCLUDE ANY CLAIMS, SUITS OR JUDGMENTS BROUGHT AGAINST LACMTA UNDER THE FEDERAL EMPLOYEE'S LIABILITY ACT, INCLUDING CLAIMS FOR STRICT LIABILITY UNDER THE SAFETY APPLIANCE ACT OR THE BOILER INSPECTION ACT, WHENEVER SO CLAIMED.

Contractor further agrees, at its expense, in the name and on behalf of LACMTA, that it shall adjust and settle all claims made against LACMTA, and shall, at LACMTA's discretion, appear and defend any suits or actions of law or in equity brought against LACMTA on any claim or cause of action arising or growing out of or in any manner connected with any liability assumed by contractor under this Agreement for which LACMTA is liable or is alleged to be liable. LACMTA shall give notice Contractor, writing, of the receipt or dependency of such claims and thereupon Contractor shall proceed to adjust and handle to a conclusion such claims, and in the event of a suit being brought against LACMTA, LACMTA may forward summons and complaint or other process in connection therewith to Contractor, and Contractor, at LACMTA's discretion, shall defend, adjust, or settle suits and protect, indemnify, and save harmless LACMTA from and against all damages, judgments, decrees, attorney's fees, costs, and expenses growing out of or resulting from or incident to any such claims or suits.

It is mutually understood and agreed that the assumption of liabilities and indemnification provided for in this Agreement shall survive any termination of this Agreement.

Section 2. INSURANCE

(a) Before commencing any work under this Agreement, Contractor must provide and maintain in effect throughout the term of this Agreement insurance, at contractor' expense, covering all of the work and services to be performed hereunder by Contractor and each of its subcontractors, as described below:

(1) Worker's Compensation coverage as is required by State law. **THE CERTIFICATE MUST CONTAIN A SPECIFIC WAIVER OF THE INSURANCE COMPANY SUBROGATION RIGHTS AGAINST THE LOS ANGELES COUNTY METROPOLITAN TRANSPORTATION AUTHORITY**

(2) Commercial General Liability insurance covering liability, including but not limited to, Public Liability, Personal Injury, Property Damage and Contractual Liability covering the obligations assumed by Contractor in Section 1, with coverage of at least $5,000,000 per occurrence and $10,000,000 in the aggregate. Where explosion, collapse, or underground hazards are involved, the X, C and U exclusions must be removed from the policy.

(3) Automobile Liability insurance, including bodily injury and property damage, with coverage of at least $1,000,000 combined single limit or the equivalent covering any and all vehicles owned or hired by the Contractor and used in performing any of the services under this agreement. *

(4) Railroad Protective Liability insurance stating the Burlington Northern and Santa Fe Railway Company is the named Insured and that the Los Angeles County Metropolitan Transportation Authority is named as additionally insured covering all of the liability assumed by the Contractor under the provisions of this Agreement with coverage of at least $5,000,000 per occurrence and $10,000,000 in the aggregate. Coverage shall be issued on a standard ISO form CG003050196 and endorsed to include ISO form CG28311093 and the Limited Seepage and Pollution Endorsement (see attached copy).

The average train traffic per 24-hour period on this route is 13 freight trains and 4 switch engine movements at a timetable speed of 20 MPH.

All insurance shall be placed with insurance companies licensed to do business in the States in which the work is to be performed, and with a current Best's Insurance Guide Rating of A- and Class VII, or better.

In all cases except Worker's Compensation coverage the certificate must specifically state that THE LOS ANGELES COUNTY METROPOLITAN TRANSPORTATION AUTHORITY IS AN ADDITIONAL INSURED.

Any coverage afforded LACMTA, the Certificate Holder, as an Additional Insured shall apply as primary and not excess to any coverage issued in the name of LACMTA.

(b) Such insurance shall be approved by the LACMTA before any work is performed on LACMTA's Property and shall be carried until all work required to be performed on or adjacent to LACMTA's Property under the terms of the contract is satisfactorily completed as determined by the City of Torrance and thereafter until all tools, equipment and materials not belonging to LACMTA, have been removed from LACMTA's right of way and LACMTA's right of way, track and appurtenances are left in a clean and presentable condition. The insurance herein required shall be obtained by the Contractor and Contractor shall furnish LACMTA with an original certificate of insurance, signed by the insurance company, or its authorized representative, evidencing the insurance of insurance coverage as prescribed in (a) 1, 2 and 3 above, plus the original Railroad Protective Liability insurance policy to:

Attention: Manager Third Party Coordination
The Los Angeles County Metropolitan Transportation Authority
One Gateway Plaza
Los Angeles, CA 90012

The certificate of insurance shall guarantee that the policies will not be amended, altered, modified or canceled insofar as the coverage contemplated hereunder is concerned, - without at least thirty (30) days notice mailed by registered mail to LACMTA.

Full compensation for all premiums which the Contract is required to pay on all the insurance described hereinafter shall be considered as included in the prices paid for the various items of work to be performed under the Contract, and no additional allowance will be made therefore or for additional premiums which may be required by extensions of the policies of insurance.

It is further distinctly understood and agreed by the Contractor that its liability to the LACMTA herein under Section 1 will not in any way be limited to or affected by the amount of insurance obtained and carried by the Contractor in connection with said Contract.

Section 3. The Contractor will observe and comply with all the provisions, obligations and limitations to be observed by Contractor which are contained in the subdivision of the specifications of said Contract, entitled EXHIBIT 'C", CONTRACTOR EQUIPMENTS, and shall include, but not be limited to, payment of all costs incurred for any damages to LACMTA's right of way, resulting from use, occupancy, or present of its employees, representatives, or agents or subcontractors on or about the construction site.

Contractor and subcontractors shall plan, schedule, coordinate and conduct all Contractor's work so as to not cause any delays to any trains.

Kindly acknowledge receipt of this letter by signing and returning to the undersigned two original copies of this letter, which, upon execution by Railway, shall constitute an Agreement between us.

Yours truly,

_____
(Contractor)

By_____

_____
(Title)

_____
Address

_____
City, State, Zip

The Los Angeles County Metropolitan Transportation Authority

By _____

_____
Manager Third Party Coordination

Accepted this____day of _____ , 2009

Exhibit I-2

Form Approved by VP-Law

Exhibit I-2

Los Angeles County Metropolitan Transportation Authority Estimate of Cost for Plan Review, Supervision and Inspection.

8 days @ $560 per day = $4,480.00

APPENDIX XII

CALIFORNIA WATER SERVICE COMPANY

WATER PIPELINE RELOCATION AGREEMENT

DEL AMO BLVD EXTENSION, T-30

WATER PIPELINE RELOCATION AGREEMENT –
California Water Service Company

The Table below summarizes information and requirements from the above-referenced Agreement between the City and California Water Service Company. The purpose is to inform a prospective Bidder and Contractor.

Sec. I.1	☐ City shall relocate Cal Water's Existing Pipeline.
Sec. III.1	▪ Cal Water shall have access to all phases of relocation work for inspection ▪ All questions regarding the work will be directed to the City's Resident Engineer
Sec. III.2	▪ City's Contractor will furnish or cause to be furnished all necessary labor, materials, tools, and equipment required and prosecute said work diligently to completion
Sec. IV. 8	☐ City's general contractor shall maintain a general liability insurance with an insurance company acceptable to Cal Water ▪ Limits of liability in excess or $1,000,000, for each occurrence ▪ Limits of liability in excess or $5,000,000 in the aggregate ▪ California Water Service Company shall be named as an additional insured. ▪ Certificate will provide that Cal Water shall receive written notification at least 30 days prior to any cancellation of policy. ▪ Certificate of insurance shall be provided prior to the commencement of work.

City of Torrance

UTILITY AGREEMENT

COUNTY	DISTRICT	T.G. PAGE	T.G. GRID	PROJECT #
Los Angeles	7	763	E-4, F-4	RSTPL-5249(014)
Federal Aid No. EA #:07-4U3154L				
Owner's File No. 00015416				
FEDERAL PARTICIPATION: On the Project: Yes☒ No☐ On the Utilities: Yes☐ No☒				

WATER PIPELINE RELOCATION AGREEMENT

This Water Pipeline Relocation Agreement ("Agreement") is made and entered into as of July 30, 2009, by and between California Water Service Company,("Cal Water"), and the City of Torrance, a municipal corporation, ("City") (Cal Water and the City may also be identified herein as a "Party" or collectively as the "Parties").

RECITALS

WHEREAS, the City proposes to construct an extension of Del Amo Boulevard between Crenshaw Boulevard and Maple Avenue ("Project") that includes the construction of a proposed bridge over the Burlington Northern Santa Fe railroad tracks in the City of Torrance, Los Angeles County, California.

WHEREAS, Cal Water owns, operates and maintains a water pipeline and related facilities located, in part, within 1) existing street right of way for Del Amo Boulevard east of Maple Avenue; 2) Burlington Northern and Santa Fe Railway Company's ("BNSF") property located at Harbor Subdivision Mile Post 20.16 (APN 7352-002-819 & -820); 3) Los Angeles County Metropolitan Transportation Authority's ("LACMTA") property located at Harbor Subdivision Mile Post 20.16 (APN 7352-002-905); and 4) ExxonMobil Oil Company's ("ExxonMobil") Torrance refinery located at 3700 West 190th Street, Torrance, CA 90504 (APN 7352-002-023), hereinafter referred to as "Existing Pipeline."

WHEREAS, the Existing Pipeline is within the limits of the Project and must be, in part, relocated to accommodate the Project and also to be accessible to Cal Water subsequent to construction of the Project.

WHEREAS, Cal Water, successor to Dominguez Water Corporation, is the holder of a permanent easement from ExxonMobil, successor to Mobil Oil Corporation and General Petroleum Corporation, for the Existing Pipeline pursuant to the terms and conditions of a Right of Way Agreement, dated May 2, 1972 ("Right of Way Agreement").

WHEREAS, Mobil Oil Corporation granted the City real property which overlaps a portion of Cal Water's permanent easement as stated in the Right of Way Agreement pursuant to Document Number 77-395341 recorded on April 19, 1977 in the Official Records of the Los Angeles County Recorder's Office.

WHEREAS, the portion of the relocated waterline that is on City property and will be relocated as part of this Project on City property will not be subject to a franchise fee in this area.

CS.

NOW THEREFORE, in consideration of the terms and provisions herein contained, the Parties agree as follows:

I. Work to be Done:

1. In accordance with Notice to Owner No. 2 dated April 27, 2009, the City shall relocate Cal Water's Existing Pipeline as shown on Cal Water's Plan No. DOM-0328 dated March 19, 2009, which plans are included in the City's Contract Plans for the improvement of the Project which, by this reference are made a part hereof.

   The City shall perform the reroute of Transmission Water Pipeline, which includes the appropriate closure of that portion of the Existing Pipeline within the existing street right of way for Del Amo Blvd., BNSF property (APN 7352-002-819 & -820), LACMTA property (APN 7352-002-905), and ExxonMobil property (APN 7352-002-023) as designated on Exhibit A and by construction of a new pipeline (the "New Pipeline") within the existing street right of way for Del Amo Boulevard west of Madrona Avenue, TMT South Bay Business Park's ("TMT") property located at 2807 Oregon Court, Torrance, CA 90503 (APNs 7352-009-027), BNSF property located at Harbor Subdivision MP 20.19 (APN 7352-002-812 & -818), LACMTA property located at Harbor Subdivision MP 20.19 (APN 7352-002-903), DOW Chemical Company's ("DOW") property located at 305 Crenshaw Boulevard, Torrance, CA 90503 (APN 7352-002-017) and ExxonMobil property located at 3700 West 190th Street, Torrance, CA 90504 (APN 7352-002-023) indicated on Exhibit A, which by this reference are made a part hereof. CAL WATER hereby acknowledges review of the CITY's plans for work and agrees to the construction in the manner proposed.

2. Deviations from CAL WATER's plan described above initiated by either the CITY or CAL WATER, shall be agreed upon by both parties hereto under a Revised Notice to Owner. Under such Revised Notices to Owner, approved by the CITY and acknowledged by CAL WATER, will constitute an approved revision of the plan described above and are hereby made a part hereof. No work under said deviation shall commence prior to receipt by CAL WATER of the Revised Notice to Owner. Changes in the scope of the work will require an amendment to this Agreement and a Revised Notice to Owner. CAL WATER shall have the right to inspect the work during construction. Upon completion of the work by the CITY, CAL WATER agrees to accept ownership and maintenance of the constructed facilities and relinquishes ownership of the replaced facilities.

II. Liability for Work:

1. Existing facilities are located in their present position pursuant to rights superior to those of the CITY and the affected portion of CAL WATER's 18" Existing Pipeline will be relocated at the CITY's expense.

2. The facilities are also services installed and maintained on private property required for highway purposes and will be relocated at the CITY's expense.

III. Performance of Work:

1. CAL WATER shall have access to all phases of the relocation work to be performed by the CITY for the purpose of inspection to ensure that the work is in accordance with the specifications

CS

contained in the Construction Contract; however, all questions regarding the work being performed will be directed to the CITY's Resident Engineer for their evaluation and final disposition.

2. The CITY will cause the relocation of the work as stated in Section I-1 above by the CITY's Contractor and will furnish or cause to be furnished all necessary labor, materials, tools, and equipment required therefore, and prosecute said work diligently to completion.

IV. Payment for Work:

1. The CITY shall pay its share of the actual cost for CAL WATER to furnish supervision for the construction of the relocation of the Existing Pipeline herein described within 90 days after receipt of CAL WATER's itemized bill in quintuplicate, signed by a responsible official of CAL WATER's organization and prepared on CAL WATER's letterhead, compiled on the basis of the actual cost and expense incurred and charged or allocated to said work in accordance with the uniform system of accounts prescribed for CAL WATER by the California Public Utilities Commission (PUC).

2. It is understood and agreed that the CITY will not pay for any betterment or increase in capacity of CAL WATER's facilities in the new location.

3. The estimated cost for work CAL WATER will perform due to the CITY's Project is $49,000 per Exhibit B. The estimated Salvage Credit is $0 as CAL WATER will not remove and/or retain materials from the construction project. Accrued depreciation credits are not applicable as payment is for inspection and review costs only.

4. Not more frequently than once a month, but at least quarterly, CAL WATER will prepare and submit progress bills for costs incurred not to exceed CAL WATER's recorded costs as of the billing date less estimated credits. Payment of progress bills not to exceed the amount of this Agreement may be made under the terms of this Agreement. Payment of progress bills which exceed the amount of this Agreement may be made after receipt and approval by the CITY of documentation supporting the cost increase and after an Amendment to this Agreement has been executed by the parties to this Agreement.

5. CAL WATER shall submit a final bill to the CITY within 180 days after the completion of the work described in Section I above If the CITY has not received a final bill within 180 days after notification of completion of CAL WATER's work described in Section I of this Agreement, and CITY has delivered to CAL WATER full executed Director's Deeds, Amendments to Right of Way Agreements, Licenses Consents to Common Use or Joint Use Agreements as required for CAL WATER's facilities; CITY will provide written notification to CAL WATER of its intent to close its file within 30 days and CAL WATER hereby acknowledges, to the extent allowed by law that all remaining costs will be deemed to have been abandoned.

6. The final billing shall be in the form of an itemized statement of the total costs charged to the project, less the credits provided for in this Agreement, and less any amounts covered by progress billings. However, the CITY shall not pay final bills, which exceed the estimated cost of this Agreement without documentation of the reason for the increase of said cost from CAL WATER. If the final bill exceeds CAL WATER's estimated costs solely as the result of a revised Notice to Owner as provided for in Section I, a copy of said revised Notice to Owner shall suffice as documentation.

7. In any event if the final bill exceeds 125% of the estimated cost of this Agreement, an amended

C.S

Agreement shall be executed by the parties to this Agreement prior to the payment of CAL WATERs final bill. Any and all increases in costs that are the direct result of deviations from the work described in Section I of this Agreement shall have the prior concurrence of the CITY.

8. Detailed records from which the billing is compiled shall be retained by CAL WATER for a period of three years from the date of the final payment and will be available for audit in accordance with Contract Cost Principals and Procedures as set forth in 48 CFR, Chapter 1, Part 31 by the CITY and/or Federal Auditors."

V. General Conditions:

1. All costs accrued by CAL WATER as a result of the CITY's request of January 15, 2009 to review, study and/or prepare relocation plans and estimates for the project associated with this Agreement may be billed pursuant to the terms and conditions of this Agreement.

2. If the CITY's project which precipitated this Agreement is canceled or modified so as to eliminate the necessity of work by CAL WATER, the CITY will notify CAL WATER in writing, and the CITY reserves the right to terminate this Agreement by Amendment. The Amendment shall provide mutually acceptable terms and conditions for terminating the Agreement.

3. CAL WATER shall submit a Notice of Completion to the CITY within 30 days of the completion of work for which CAL WATER may bill the CITY described herein.

4. CITY will grant CAL WATER a utility easement for the construction, operation, and maintenance of a water pipeline in the utility easement that the CITY acquired from TMT South Bay Business Park, Inc. ("TMT"). The utility easement from CITY to CAL WATER in the TMT utility easement is attached as Exhibit C. Additionally, CITY will grant CAL WATER a utility easement for the construction, operation, and maintenance of a water pipeline in the utility easement that the CITY acquired from DOW CHEMICAL COMPANY ("DOW"). The utility easement from CITY to CAL WATER in the DOW utility easement is attached as Exhibit D. The granting of easements for a water pipeline on the DOW utility easement and the TMT utility easement does not alter or diminish the prior rights that CAL WATER claims to have on these properties. Any prior rights that CAL WATER has regarding the existing water pipeline on CITY property as shown in Exhibit A will be recognized in the new location of the water pipeline on CITY property as shown in Exhibit A.

5. If CAL WATER has to acquire Pipeline License Agreements from BNSF, then the City will pay an amount not to exceed $7,000 for these Pipeline License Agreements unless prior approval is given by the CITY. Said property shall be appraised and acquired in accordance with lawful acquisition procedures.

6. It is understood that said highway is a federal-aid highway and accordingly, 23 CFR 645 is hereby incorporated into this Agreement.

7. The CITY shall indemnity, defend and hold CAL WATER, its officers, agents, employees, successors and assigns harmless from and against any and all losses, liabilities, claims, and damages including claims for personal injury or property damages arising from or in any way associated with the construction of the water line relocation. However, this indemnification will

C5

terminate for that portion of the water line relocation, if CAL WATER or its agents, conduct or perform any repair, maintenance or emergency work that would disturb or modify the existing condition of the water line relocation as constructed by the City.

8. The CITY's general contractor for the Work of Construction shall maintain a general liability insurance with an insurance company acceptable to CAL WATER with limits of liability in excess or $1,000,000, for each occurrence and $5,000,000 in the aggregate, and which names California Water Service Company as an Additional Insured thereunder. The CITY shall provide CAL WATER with a certificate evidencing such insurance coverage, which provides that CAL WATER shall receive written notification at least 30 days prior to any cancellation thereof. The CITY shall provide the certificate of insurance described herein prior to the commencement of work on the Work of Construction by the CITY, and of it employees, agents, contractors or subcontractors.

9. All notices, requests, demands, or other communications under this Agreement shall be in writing and shall be provided as follows:

(a) Notice shall be sufficiently given for all purposes when provided as follows:

(i) Personal Delivery. When personally delivered to the recipient: notice is effective on delivery.

(ii) First Class Mail. When mailed first class to the last address of the recipient known to the Party giving notice: notice is effective three mail delivery days after deposit in an United States Postal Service office or mailbox.

(iii) Certified Mail. When mailed certified mail, return receipt requested: notice is effective on receipt, if delivery is confirmed by a return receipt.

(iv) Overnight Delivery. When delivered by an overnight delivery service, charges prepaid or charged to sender's account: notice effective on delivery, if delivery confirmed by the delivery service.

(v) Facsimile Transmission. When sent by fax to the last fax number of the recipient known to the Party giving notice: notice is effective on receipt. Any notice by fax is deemed received on the next business day if it is received after 5:00p.m. (recipient's time) or on a non-business day.

(b) Addresses for purpose of giving notice are as follows:

CAL WATER:	California Water Service Company (General Office) Corporate Headquarters Attn: Corporate Secretary 1720 North First Street San Jose, CA 95112
with a copy to:	California Water Service Company Attn: District Manager 2632 W. 237th Street Torrance, CA 90505 Fax: (310)325-4152

C-5

CITY:	City of Torrance City Clerk 3031 Torrance Boulevard Torrance, CA 90503 Fax: (310) 618-2931
with a copy to:	City of Torrance Public Works Department 20500 Madrona Avenue Torrance, CA 90503 Fax: (310) 618-2822

(c) Any correctly addressed notice that is refused, unclaimed, or undeliverable because of an act or omission of the Party to be notified, will be deemed effective as of the first date the notice was refused, unclaimed or deemed undeliverable by the postal authorities, messenger or overnight delivery service.

(d) Either Party may change its address or fax number by giving the other Party notice of the change in any manner permitted by this Agreement.

10. This Agreement and any exhibits are binding on the successors and assigns of the Parties. The Agreement may not be assigned by either Party without the prior written consent of the other. This Agreement represents the entire understanding of the Parties as to those matters contained in it. No prior oral or written understanding will be of any force or effect with respect to the terms of this Agreement. This Agreement may not be modified or altered except in writing signed by both Parties.

11. If any part of this Agreement is found to be in conflict with applicable laws, that part will be inoperative, null and void insofar as it is in conflict with any applicable laws, but the remainder of the Agreement will remain in full force and effect.

12. This Agreement will be administered and interpreted under the laws of the State of California.

13. No delay or omission in the exercise of any right or remedy by a non-defaulting party on any default will impair the right or remedy or be construed as a waiver. A Party's consent or approval of any act by the other Party requiring the first Party's consent or approval will not be deemed to waive or render unnecessary that Party's consent or approval of any subsequent act. Any waiver by either Party of any default must be in writing and will not be a waiver of any other default concerning the same or any other provision of this Agreement.

14. All exhibits identified in this Agreement are incorporated into the Agreement by this reference.

15. The person(s) executing this Agreement on behalf of each Party warrant that they are duly authorized to execute this Agreement on behalf of such Party.

16. With the exception of willful misconduct or gross negligence, neither CAL WATER nor the CITY shall be liable to the other for any special or consequential damages.

C.5

17. Notwithstanding anything to the contrary in this Agreement, each Party shall bear full responsibility, without limit, for its gross negligence or willful misconduct attributable to its managerial or senior supervisory personnel and, in no event, will a Party be required to release or indemnify the other Party for gross negligence or willful misconduct attributable to the other Party's managerial or senior supervisory personnel.

IN WITNESS WHEREOF, the Parties have executed this Agreement on the dates set forth below their respective signatures, but effective as of the date first above written.

CITY OF TORRANCE

A Municipal Corporation

By: _____
Frank Scotto, Mayor

ATTEST:

By: _____
Sue Herbers, City Clerk

DATED: 07-14-2009

APPROVED AS TO FORM:
JOHN L. FELLOWS III
City Attorney

By: _____

CALIFORNIA WATER SERVICE COMPANY

By: _____

Name: Mike Rossi

Title: Vice President

Date: 7/30/09

Attachments:

	Exhibit A	Plan
	Exhibit B	Cost Estimate
	Exhibit C	TMT Utility Easement
	Exhibit D	Dow Utility Easement

CS

EXHIBIT A
PLAN

c.5

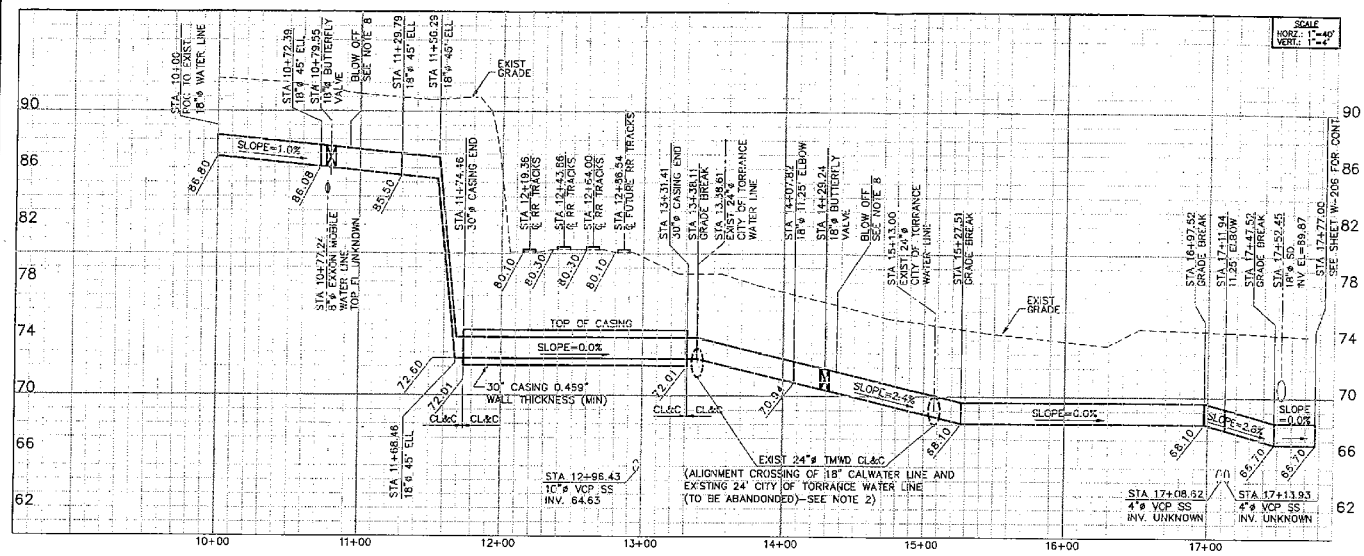

PROFILE
18"ø LINE W-2

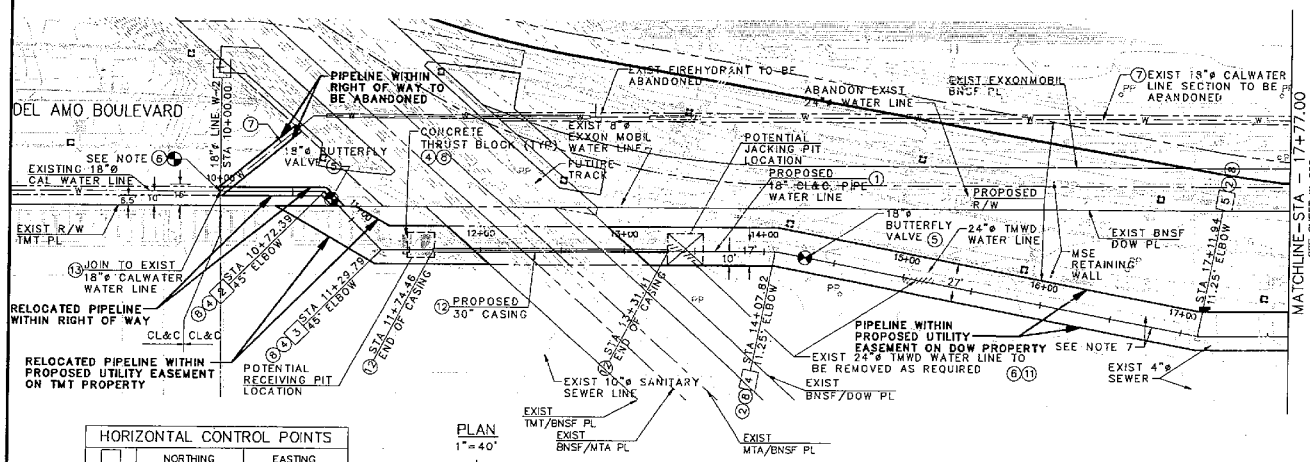

PLAN
1"=40'

SCALE: 1"=40'

HORIZONTAL CONTROL POINTS		
	NORTHING	EASTING
1	56814.11	85460.02
2	56814.11	85532.41
3	56773.52	85573.00
4	56773.52	85851.02
5	56715.49	86149.55

CONTRACTOR NOTES

1. CONTRACTOR SHALL POTHOLE ALL UTILITY CROSSINGS AND POINTS OF CONNECTION TO VERIFY HORIZONTAL AND VERTICAL LOCATIONS PER GENERAL NOTES.
2. THE EXISTING 24" TWMD WITHIN THIS WORK AREA WILL BE SHUT OFF DURING CONSTRUCTION OF THE NEW REROUTED WATER LINE. CONTRACTOR SHALL REMOVE SECTIONS OF EXISTING 24" LINE IN ORDER TO ROUTE NEW LINE. EXIST CAL WATER 18" WILL BE IN SERVICE DURING WORK.
3. ALL SEGMENTS OF THE EXISTING LINE TO BE ABANDONED SHALL BE FILLED WITH ONE SACK PRESSURE SLURRY MIX TO PREVENT FUTURE COLLAPSE OF LINE AND GROUND SUBSIDENCE.
4. CONTRACTOR SHALL FIELD VERIFY ALL ELEVATIONS AND DIMENSIONS. ANY DISCREPANCY SHALL BE REPORTED TO THE ENGINEER PRIOR TO STARTING WORK.
5. TEMPORARY BLOW-OFF ASSEMBLY SHALL BE INSTALLED PER SHEET W-208, DETAIL CW 122R3, AT PROPOSED TIE-IN LOCATIONS FOR DISINFECTION PURPOSES.
6. THE EXISTING PIPE AT THE TIE-INS IS 18" CL & C. THE NEW 18" PIPE SHALL BE CL & C.
7. THE 18" CWS WATERLINE CENTERLINE SHALL BE LOCATED 7 FOOT FROM THE CENTERLINE OF THE PROPOSED ADJACENT 24" TMWD LINES RUN IN A STRAIGHT ALIGNMENT.
8. BORED OR JACKING PIT LOCATION SHALL BE A MINIMUM OF 30' FROM THE CENTERLINE OF THE RAILROAD TRACK. PIT MUST NOT BE OPEN MORE THAN 48 HOURS AND MUST BE PROTECTED WHEN NOT IN USE.
9. MINIMUM OF 5.5' COVER FROM BASE OF RAILROAD TRACK TO TOP OF PIPE.

CONSTRUCTION NOTES

1. CONSTRUCT 18" CL & C PIPE.
2. CONSTRUCT 11.25° CL & C WELDED JOINTS.
3. CONSTRUCT 22.5° CL & C ELBOW, WELDED JOINTS.
4. CONSTRUCT 45° CL & C ELBOW, WELDED JOINTS.
5. CONSTRUCT 18" BUTTERFLY VALVE PER SHEET W-202 AND DETAIL CW 801R2.
6. CUT AND CAP EXISTING WATER MAIN PER SPECIFICATIONS. REMOVE INTERFERING PORTION OF EXISTING PIPE AND THRUST BLOCK AS REQUIRED.
7. ABANDON EXISTING WATER MAIN PER SPECIFICATIONS AND NOTE 3.
8. CONSTRUCT CONCRETE THRUST BLOCK PER SHEET W-208, DETAIL CW435R4.
9. ROPE PIPE AS NECESSARY
10. CONTRACTOR SHALL USE RESTRAINED JOINT FITTINGS AND THRUST BLOCKS TO ROUTE PIPE OVER/UNDER EXISTING UTILITIES.
11. REMOVE ABANDONED PORTIONS OF WATER MAIN AS NECESSARY.
12. CONSTRUCT 30" STEEL CASING PER SHEET W-207, DWG 1.4-1 AND SPECIFICATIONS.
13. WELD BUTT STRAP PER DWG. 1.2-2 AND DWG. 1.2-3

MOFFATT & NICHOL
3780 KILROY AIRPORT WAY, SUITE 600
LONG BEACH, CALIFORNIA, 90806
562-426-9551

ENGINEERING DEPARTMENT

1"=40'
D. MARTIN
J. BORNBY
W. QUESADA

CALIFORNIA WATER SERVICE COMPANY
18" WATER LINE
PLAN AND PROFILE 1
DEL AMO BOULEVARD EXTENSION

RANCHO DOMINGUEZ
3/10/2009
00015416
DOM-0328
6 of 10

SHEET W-205 SHT 109 OF 134

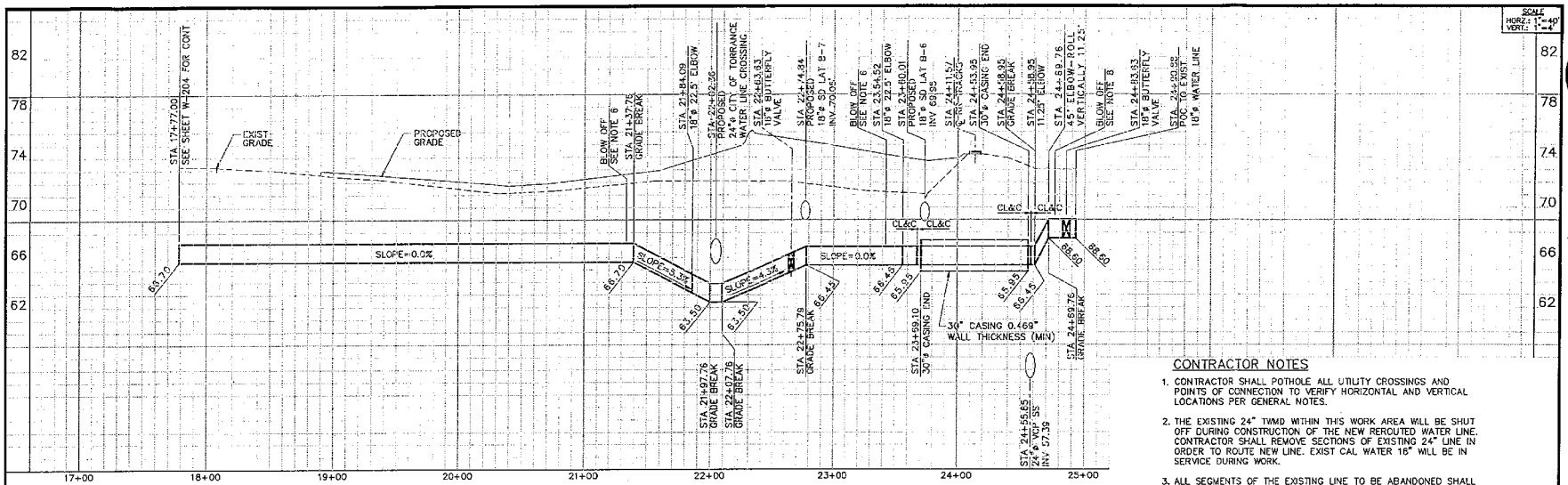

PROFILE
18ø LINE W-2

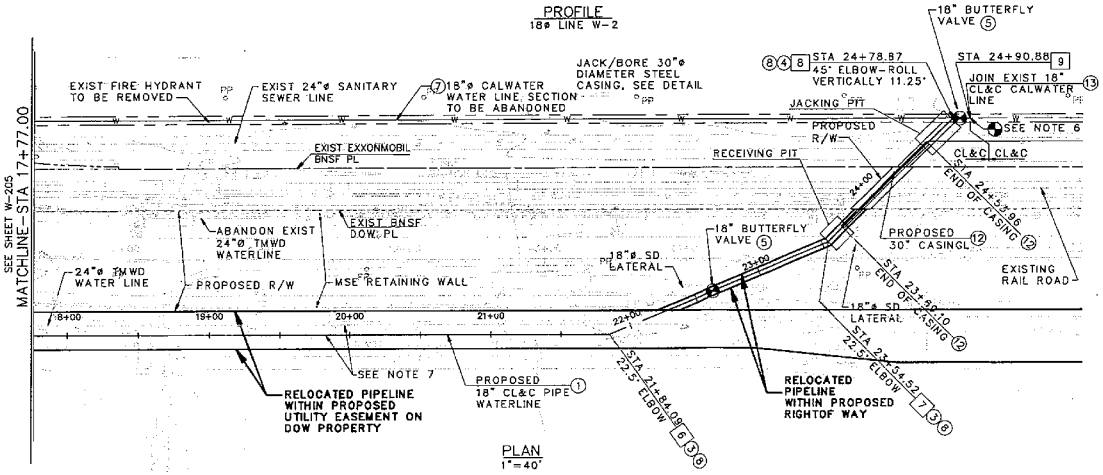

PLAN
1"=40'

HORIZONTAL CONTROL POINTS		
	NORTHING	EASTING
6	56715.49	86621.70
7	56780.72	86779.17
8	56868.64	86867.09
9	56868.65	86879.11

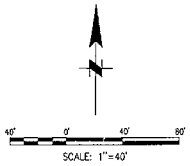

CONTRACTOR NOTES

1. CONTRACTOR SHALL POTHOLE ALL UTILITY CROSSINGS AND POINTS OF CONNECTION TO VERIFY HORIZONTAL AND VERTICAL LOCATIONS PER GENERAL NOTES.
2. THE EXISTING 24" TWMD WITHIN THIS WORK AREA WILL BE SHUT OFF DURING CONSTRUCTION OF THE NEW REROUTED WATER LINE. CONTRACTOR SHALL REMOVE SECTIONS OF EXISTING 24" LINE IN ORDER TO ROUTE NEW LINE. EXIST CAL WATER 16" WILL BE IN SERVICE DURING WORK.
3. ALL SEGMENTS OF THE EXISTING LINE TO BE ABANDONED SHALL BE FILLED WITH ONE SACK PRESSURE SLURRY MIX TO PREVENT FUTURE COLLAPSE OF LINE AND GROUND SUBSIDENCE.
4. CONTRACTOR SHALL FIELD VERIFY ALL ELEVATIONS AND DIMENSIONS. ANY DISCREPANCY SHALL BE REPORTED TO THE ENGINEER PRIOR TO STARTING WORK.
5. TEMPORARY BLOW-OFF ASSEMBLY SHALL BE INSTALLED PER SHEET W-208, DETAIL CW 122R3, AT PROPOSED TIE-IN LOCATIONS FOR DISINFECTION PURPOSES.
6. THE EXISTING PIPE AT THE TIE-INS IS 18" CL & C. THE NEW 18" PIPE SHALL BE CL & C.
7. THE 18" CWS WATERLINE CENTERLINE SHALL BE LOCATED 7 FOOT FROM THE CENTERLINE OF THE PROPOSED ADJACENT 24" TMWD LINES RUN IN A STRAIGHT ALIGNMENT.
8. BORED OR JACKING PIT LOCATION SHALL BE A MINIMUM OF 30' FROM THE CENTERLINE OF THE RAILROAD TRACK. PIT MUST NOT BE OPEN MORE THAN 48 HOURS AND MUST BE PROTECTED WHEN NOT IN USE.
9. MINIMUM OF 5.5' COVER FROM BASE OF RAILROAD TRACK TO TOP OF PIPE.

CONSTRUCTION NOTES

1. CONSTRUCT 18" CL & C PIPE.
2. CONSTRUCT 11.25° CL & C WELDED JOINTS.
3. CONSTRUCT 22.5° CL & C ELBOW, WELDED JOINTS.
4. CONSTRUCT 45° CL & C ELBOW, WELDED JOINTS.
5. CONSTRUCT 18" BUTTERFLY VALVE PER SHEET W-202 AND DETAIL CW 801R2.
6. CUT AND CAP EXISTING WATER MAIN PER SPECIFICATIONS. REMOVE INTERFERING PORTION OF EXISTING PIPE AND THRUST BLOCK AS REQUIRED.
7. ABANDON EXISTING WATER MAIN PER SPECIFICATIONS AND NOTE 3.
8. CONSTRUCT CONCRETE THRUST BLOCK PER SHEET W-208, DETAIL CW435R4.
9. ROPE PIPE AS NECESSARY
10. CONTRACTOR SHALL USE RESTRAINED JOINT FITTINGS AND THRUST BLOCKS TO ROUTE PIPE OVER/UNDER EXISTING UTILITIES.
11. REMOVE ABANDONED PORTIONS OF WATER MAIN AS NECESSARY.
12. CONSTRUCT 30" STEEL CASING PER SHEET W-207, DWG 1.4-1 AND SPECIFICATIONS.
13. WELD BUTT STRAP PER DWG. 1.2-2 AND DWG. 1.2-3

MOFFATT & NICHOL
3760 KILROY AIRPORT WAY, SUITE 600
LONG BEACH, CALIFORNIA, 90806
562-426-9551

ENGINEERING DEPARTMENT

1"=40'
D. MARTIN
J. HORNBY
W. QUESADA

REGISTERED PROFESSIONAL ENGINEER
No. M025432
EXP. 9/30/10
MECHANICAL
STATE OF CALIFORNIA

TITLE: CALIFORNIA WATER SERVICE COMPANY
18" CALWATER WATER LINE
PLAN AND PROFILE 2
DEL AMO BOULEVARD EXTENSION

RANCHO
DOMINGUEZ
3/19/2009
00015416
DOM-0328
SHT 7 OF 10

EXHIBIT B
Cost Estimate

C.5

EXHIBIT B

PROJECT ESTIMATE

PROJECT DESCRIPTION:	Del Amo Extention	DISTRICT:	DOM
PROJECT ID:	15416	PREPARED BY:	J. Cabradilla
BUDGET YEAR:	2009	TITLE:	Associate Engineer
BUDGET VALUE:	$49,000	DATE:	May 2009

I. Design Oversite

ITEM	QUANTITY	UNIT	UNIT COST	TOTAL	COST BASIS
CWS Engineering - Civil	40	HR.	$79.69	$3,188	Estimated
CWS Field MGR / SUPV	16	HR.	$71.71	$1,147	Estimated

SUBTOTAL DESIGN OVERSITE		$4,335	
0%	ESCALATION	$0	(5% per year)
SUBTOTAL DESIGN OVERSITE		$4,335	
10%	CONTINGENCY	$433	
SUBTOTAL DESIGN OVERSITE		*$4,768*	

II. Construction Oversite*

ITEM	QUANTITY	UNIT	UNIT COST	TOTAL	COST BASIS
CWS Engineering - Civil	100	HR.	$79.69	$7,969	Estimated
CWS Field MGR/SUPV	100	HR.	$71.71	$7,171	Estimated
CWS Field Labor / EMT (Inspection)	320	HR.	$52.09	$16,669	Estimated
CWS Field Labor / EMT (Leak Crew)	40	HR.	$52.09	$2,084	Estimated
CWS Field Labor / EMT (Leak Crew)	40	HR.	$52.09	$2,084	Estimated

SUBTOTAL CONSTRUCTION OVERSITE		$35,976	
0%	ESCALATION	$0	(5% per year)
SUBTOTAL CONSTRUCTION OVERSITE		$35,976	
10%	CONTINGENCY	$3,598	
SUBTOTAL CONSTRUCTION OVERSITE		*$39,574*	
	PROJECT SUBTOTAL	$44,342	
	10% OH	$4,434	
	PROJECT SUBTOTAL	$48,776	
	PROJECT TOTAL	**$49,000**	

Note:
* The number of hours is base on three months timeline project.

CS

EXHIBIT C
TMT Utility Easement

C.5

EXHIBIT C

PORTION OF APN. 73S2-009-027

UTILITY EASEMENT FOR WATER PIPELINE PURPOSES

The City of Torrance grants the following Utility Easement for the construction, operation, and maintenance of a water pipeline to California Water Service Company.

THAT PORTION OF PARCEL 1 IN THE CITY OF TORRANCE, COUNTY OF LOS ANGELES. STATE OF CALIFORNIA, AS SHOWN ON PARCEL MAP No. 14850 AS FILED IN BOOK 158, PAGES 94 AND 95 OF PARCEL MAPS, IN THE OFFICE OF THE COUNTY RECORDER OF SAID COUNTY, BOUNDED AND DESCRIBED AS FOLLOWS:

COMMENCING AT THE NORTHEASTERLY CORNER OF SAID PARCEL 1; THENCE ALONG THE NORTHEASTERLY LINE OF SAID PARCEL SOUTH 48°00'00" EAST, 20.30 FEET TO THE **TRUE POINT OF BEGINNING**, SAID LAST MENTIONED LINE ALSO BEING THE SOUTHWESTERLY LINE OF THE RIGHT OF WAY, 60 FEET WIDE, OF THE SANTA FE AND LOS ANGELES HARBOR RAILWAY COMPANY AS DESCRIBED IN PARCEL 1 OF DEED DATED JUNE 14, 1922, RECORDED JULY 1, 1922 IN BOOK 1261, PAGE 48, OFFICIAL RECORDS OF SAID COUNTY; THENCE CONTINUING ALONG SAID NORTHEASTERLY LINE SOUTH 48°00'00" EAST, 40.35 FEET; THENCE WEST 79.39 FEET; THENCE NORTH 59°59'59" WEST 81.17 FEET TO THE.NORTHERLY LINE OF SAID FIRST MENTIONED PARCEL 1, SAID NORTHERLY LINE ALSO BEING THE NORTHERLY LINE OF LOT 7, AS SHOWN ON TRACT MAP No. 7873, RECORDED IN BOOK 109, PAGES 99 AND 100 OF MAPS IN THE OFFICE OF SAID COUNTY RECORDER; THENCE ALONG SAID NORTHERLY LINE SOUTH 89°59'51" EAST, 54.00 FEET; THENCE SOUTH 59°59'59" EAST, 27.17 FEET; THENCE EAST TO SAID NORTHEASTERLY LINE OF PARCEL 1, A DISTANCE OF 42.17 FEET TO THE **TRUE POINT OF BEGINNING**.

CONTAINING 3,104 SQUARE FEET OR 0.071 ACRES MORE OR LESS.

SEE EXHIBIT "C-2" MAP ATTACHED HERETO AND BY REFERENCE MADE A PART HEREOF.

EXHIBIT C-2

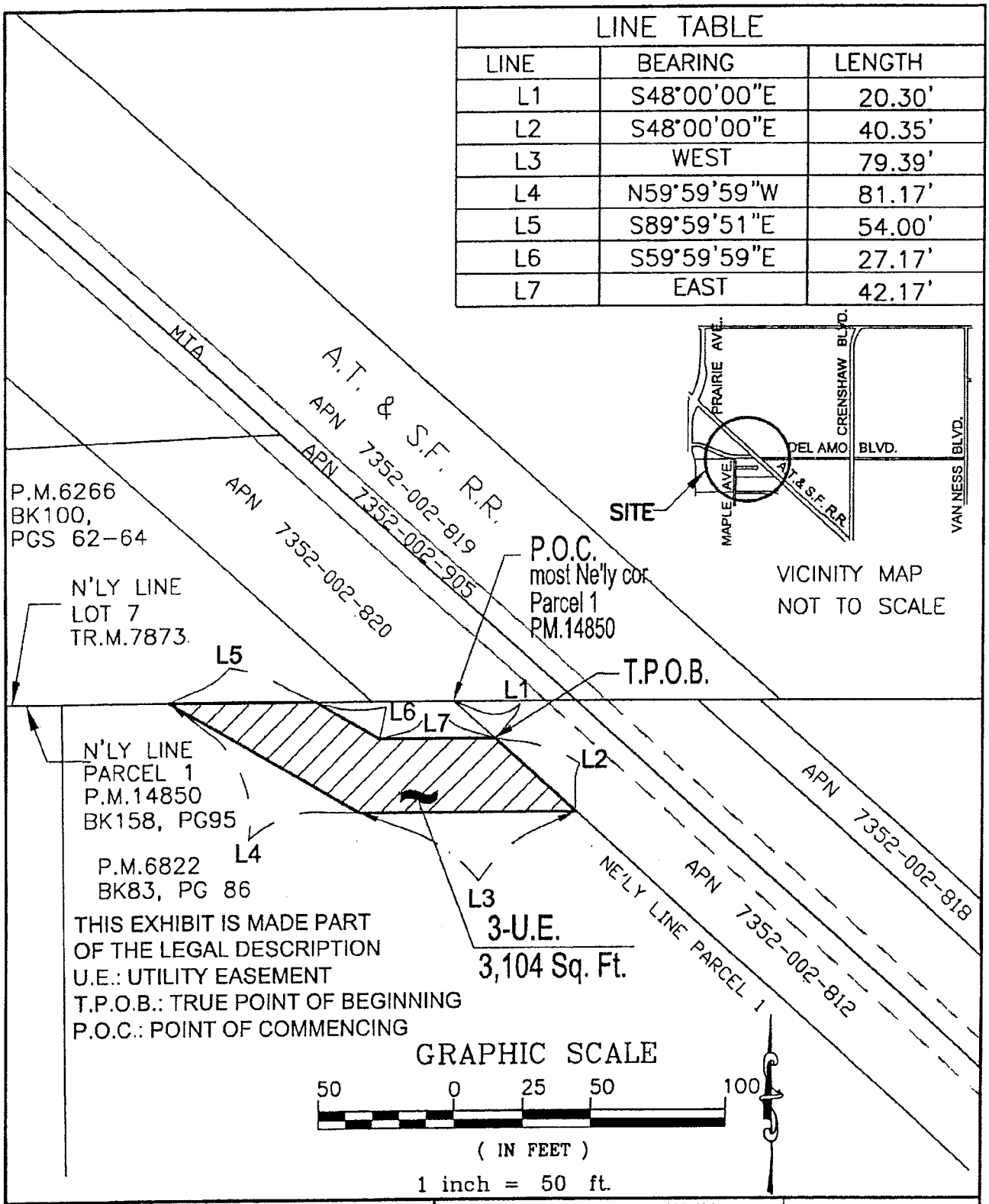

LINE TABLE		
LINE	BEARING	LENGTH
L1	S48°00'00"E	20.30'
L2	S48°00'00"E	40.35'
L3	WEST	79.39'
L4	N59°59'59"W	81.17'
L5	S89°59'51"E	54.00'
L6	S59°59'59"E	27.17'
L7	EAST	42.17'

DEL AMO BOULEVARD EXTENSION CITY OF TORRANCE	OWNER NAME : TMT SOUTH BAY BUSINESS PARK APN 7352-009-027	DATE: 03-22-06
Paragon Partners Ltd 5762 Bolsa Avenue, Ste. 201 Huntington Beach, CA 92649 CHECKED _____ DATE	CITY OF TORRANCE	SCALE: AS SHOWN
	POR. PCL 1, P.M. 14850, BK 158,PG 95	DRAWN BY : MAT
	POR. LOT 7,TR. M. 7873, BK 109, PGS 99&100	REV. DATE 6/3/6 REV. No2
	COUNTY OF LOS ANGELES	

EXHIBIT D
Dow Utility Easement

c5

EXHIBIT "D"

Portion of APN. 7352-002-017

UTILITY EASEMENT FOR WATER PIPELINE PURPOSES

The City of Torrance grants the following Utility Easement for the construction, operation, and maintenance of a water pipeline to California Water Service Company.

THAT PORTION OF LOT 8, OF TRACT 7873, IN THE CITY OF TORRANCE, COUNTY OF LOS ANGELES, STATE OF CALIFORNIA, AS PER RECORDED IN BOOK 109, PAGES 99 AND 100 OF MAPS, IN THE OFFICE OF THE COUNTY RECORDER OF SAID COUNTY BOUNDED AND DESCRIBED AS FOLLOWS:

COMMENCING AT THE INTERSECTION OF THE NORTHERLY LINE OF SAID LOT 8 WITH THE NORTHEASTERLY BOUNDARY OF THAT CERTAIN 15.00 FOOT WIDE PARCEL OF LAND DEEDED BY CHANSLOR-CANFIELD MIDWAY OIL COMPANY TO THE ATCHISON, TOPEKA AND SANTA FE RAIL COMPANY FOR RIGHT OF WAY PURPOSES BY DEED DATED AUGUST 2, 1948 AND RECORDED IN BOOK 28452, PAGE 315 OF OFFICIAL RECORDS OF SAID COUNTY; THENCE SOUTH 48°00'00" EAST, 20.16 FEET TO THE TRUE POINT OF BEGINNING; THENCE EAST, 121.31 FEET; THENCE SOUTH 79°00'00" EAST, 304.12 FEET; THENCE SOUTH 89°59'51" EAST, 826.17 FEET; THENCE SOUTH, 37.35 FEET; THENCE NORTH 89°59'51" WEST, 148.61 FEET; THENCE NORTH 84°13'45" WEST, 103.18 FEET; THENCE NORTH 89°59'51" WEST, 577.50 FEET; THENCE NORTH 79°00'00" WEST, 304.12 FEET; THENCE WEST 88.72 FEET TO A POINT ON THE NORTHEASTERLY LINE OF THE RAILROAD RIGHT OF WAY; THENCE NORTH 48°00'00" WEST, 40.36 FEET ALONG SAID NORTHEASTERLY LINE TO THE TRUE POINT OF BEGINNING.

CONTAINING 35,453 SQUARE FEET OR 0.81 ACRES MORE OR LESS.

SEE EXHIBIT "D-2" MAP ATTACHED HERETO AND BY REFERENCE MADE A PART HEREOF.

cs

EXHIBIT D-2

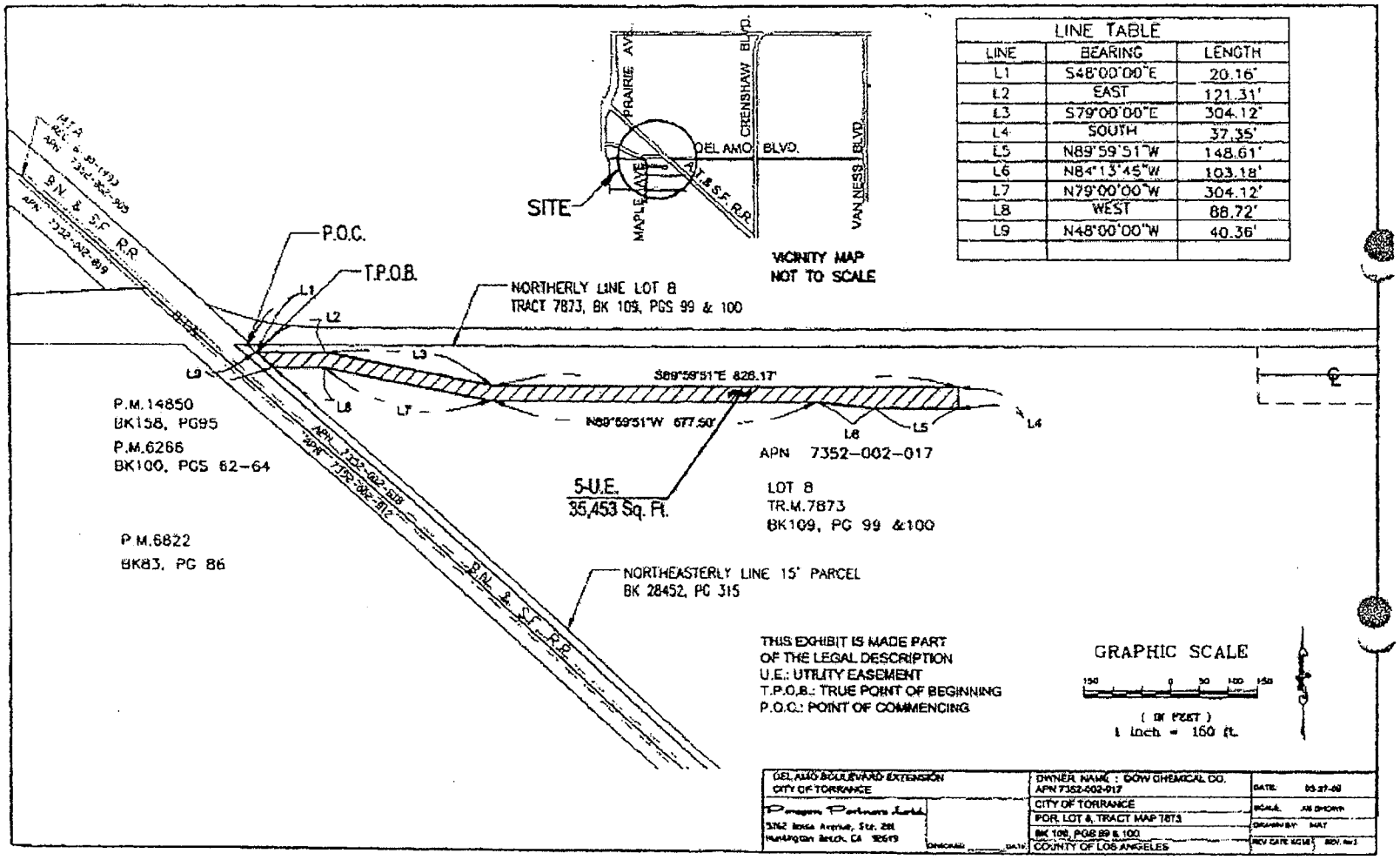

LINE TABLE		
LINE	BEARING	LENGTH
L1	S48°00'00"E	20.16'
L2	EAST	121.31'
L3	S79°00'00"E	304.12'
L4	SOUTH	37.35'
L5	N89°59'51"W	148.61'
L6	N84°13'45"W	103.18'
L7	N79°00'00"W	304.12'
L8	WEST	88.72'
L9	N48°00'00"W	40.36'

2202/062579-0086
1005498.05 a06/26/09

APPENDIX XIII

COUNTY SANITATION DISTRICTS OF LOS ANGELES COUNTY

SEWER RELOCATION AGREEMENT
AMENDMENT TO THE SEWER RELOCATION AGREEMENT
APRIL 29, 2009 LETTER

DEL AMO BLVD EXTENSION, T-30

SEWER RELOCATION AGREEMENT
County Sanitation Districts of Los Angeles County

The Table below summarizes information and requirements from the above-referenced Agreement between the City and LA County Sanitation District. The purpose is to inform a prospective Bidder and Contractor.

Sec. 7	☐ District shall be named as an additional insured on a policy of liability insurance (see Sec. 7-3 of latest edition of *Standard Specifications for Public Works Construction* and District's latest Amendments to *Standard Specifications*)
Sec. 10	☐ Continuous access for District's staff to inspect construction of Sewer Relocation shall be provided. ☐ All surveying required to construct Sewer Relocation shall be provided. ☐ "As-built" drawings stamped by a Registered Professional Civil Engineer or Registered Land Surveyor shall be provided to the District at completion of construction. ☐ Sewer pipe and manholes shall be made available for inspection by District at the manufacturer's facility. ☐ Submit 4 copies of each submittal to District. ☐ District must approve sewer pipe & manhole shafts prior to delivery to job site. ▪ District shall inspect the sewer pipe and manholes at facility within 10 working days of written request. ▪ District shall provide notification of the approval or written rejection within 5 working days of inspection
Sec. 11	☐ Closed Circuit Television (CCTV) inspection of the Sewer Relocation shall be conducted upon completion of construction & before diversion of wastewater flow into Sewer Relocation. ☐ Digital & video tape recording of CCTV shall be submitted to District.
Sec. 13	☐ City shall advise District of anticipated dates for construction of Sewer Relocation and District may file and record a *Notice of Non-responsibility*. ☐ Construction of Project and Sewer Relocation shall not restrict the District's access to the Existing Sewer ☐ Construction contractor shall diligently pursue completion of Sewer Relocation ☐ Copies of bonds must be furnished to Chief Engineer prior to commencement of any construction work

Sec. 15	☐ Upon completion of construction of Sewer Relocation and written approval by District, City shall record a *Notice of Completion,* Exhibit "B." ☐ City,shall execute and deliver to District a recordable Bill of Sale acceptable to District, Exhibit "C," at the completion of construction.
Sec. 17	☐ City or its agents shall be responsible for all costs, expenses, losses and liabilities in relation to construction of Sewer Relocation and shall indemnify, defend, and hold the District from all claims arising from: ▪ Sewer Relocation prior to its acceptance by the District ▪ Construction of the Sewer Relocation ☐ Indemnification shall exist for 15 years after District's acceptance
Sec. 19	☐ Agreement does not provide the City or its agent rights to sewer capacity in the District's sewer system or reduction of any fee. ☐ Discharge may be available only upon payment and acceptance of the District's fees and compliance with all the rules and regulations.

COPY of Document Recorded
Has not been comp
Original will be retu
processing has be
LOS ANGELES COUNTY R
04/20/2009
20090569787

RECORDING REQUESTED BY:
COUNTY SANITATION DISTRICTS
OF LOS ANGELES COUNTY
1955 WORKMAN MILL ROAD
P.O. BOX 4998
WHITTIER, CA 90607-4998

WHEN RECORDED, MAIL TO ABOVE ADDRESS

ATTN: RONNIE BURTNER
FACILITIES PLANNING DEPARTMENT

CSD C# 4468

SEWER RELOCATION AGREEMENT

This sewer relocation agreement ("Agreement") is dated April 15, 2009, and is between CITY OF TORRANCE, a municipal corporation, (the "City") and COUNTY SANITATION DISTRICT NO. 5 OF LOS ANGELES COUNTY, a county sanitation district organized and existing under the provisions of the County Sanitation District Act, Health & Safety Code Section 4700 et seq., (the "District").

The City proposes to construct an extension of Del Amo Boulevard between Crenshaw Boulevard and Maple Avenue (the "Project") that includes the construction of a proposed bridge over the Burlington Northern Santa Fe railroad tracks located adjacent to ExxonMobil Oil Company's ("Mobil") property. Mobil is successor to General Petroleum Corporation.

The District owns, operates and maintains a sewer facility in and under Mobil's property identified as the North Torrance Trunk Sewer, Section 2 (the "Existing Sewer"). The District is the holder of permanent easement for the Existing Sewer by way of January 13, 1954 Right of Way Agreement between General Petroleum Corporation and the District (the "1954 Agreement").

The construction of the proposed bridge requires the relocation of various utilities on Mobil's property, including a portion of the District's Existing Sewer.

The City proposes to relocate a portion of the Existing Sewer to avoid any impact of the Project on the Existing Sewer at the City's cost and expense.

The relocation will be accomplished by construction of a new sewer facility, and appropriate closure of the abandoned portion of sewer (together the "Sewer Relocation") to be described and located in accordance with the engineering plans and details set forth in Drawing No. 5-p-22, Sheet Nos. 1A and 1B, copies of which are on file at District's Joint Administration Office and the provisions of which are incorporated in this Agreement by reference, and the general location indicated in Exhibit "A" attached to this Agreement.

DOC #1207435

The District has determined that the Sewer Relocation, if carried out as provided in this Agreement, will not have any adverse impact on the remaining portions of the Existing Sewer or otherwise adversely affect District operations.

The City and the District therefore agree as follows:

1. The City or its agents, at no cost to the District, shall prepare detailed engineering plans and specifications for the construction of the Sewer Relocation, designated as District's Drawing No. 5-p-22, Sheet Nos. 1A and 1B, and submit them to the District's Chief Engineer and General Manager ("Chief Engineer") for review and approval. The Chief Engineer's prior approval is required to ensure suitability for District's ownership, operation, and maintenance of the Sewer Relocation.

2. The City or its agents shall acquire, at no cost to the District, all permits and occupational rights of way necessary for the construction and future operation and maintenance of the Sewer Relocation.

3. The City shall construct, or cause to be constructed, at no cost to the District, the Sewer Relocation by a contractor appropriately licensed by the State of California in strict compliance with the detailed engineering plans and specifications set forth in District's Drawing Nos. 5-p-22, Sheet 1A and 1B, as approved by the Chief Engineer and designated as the *North Torrance Trunk Sewer, Section 2.* The City shall assume all financial responsibility for the construction and all costs incidental thereto.

4. The City acknowledges and agrees that the Sewer Relocation may be regarded as a public work and that there are legal requirements applicable to a project regarded as a public work including, but not limited to, payment of prevailing wages, mode of selecting a contractor, selection of subcontractors, and administration of the construction contract, and the City agrees to identify and comply with all applicable laws. Upon execution of this Agreement, the City acknowledges and agrees to indemnify and hold harmless the District, its officers, agents and employees from all claims, actions, damages, losses, costs, liabilities, penalties arising out of any failure by the City to comply with all such legal requirements.

5. The City shall convey or cause to be conveyed to the District without cost, free and clear of any claims, liens or encumbrances, title to the Sewer Relocation and appurtenances that are necessary to carry out the purposes of this Agreement. The City shall facilitate and cause to be conveyed, without cost to the District and to the District's reasonable satisfaction, amendments to the 1954 Agreement necessary to enable the Sewer Relocation to be constructed, operated, maintained, and rehabilitated or replaced.

6. The City or its agents shall comply with the California Environmental Quality Act and prepare the necessary environmental documents for the Sewer Relocation at no cost to the District. The

City shall award the construction contract in accordance with the requirements of Public Contract Code 20783 and 20784.

7. The City or its agents shall obtain and shall name the District, through appropriate endorsements, as an additional insured on a policy of liability insurance, meeting all requirements provided for in Section 7-3 of the latest edition of the *Standard Specifications for Public Works Construction* as adopted by the District and District's latest Amendments to the *Standard Specifications* (together the "Amended Standard Specifications"). The Amended Standard Specifications have been provided by the District to the City and will be incorporated into the City's Specifications and Special Provisions for the Sewer Relocation, unless the District provides a subsequent revision to the City no later than twenty (20) working days prior to the opening of bids. The Amended Standard Specifications, or any subsequent revisions, provided by the District to the City no later than twenty (20) working days prior to the opening of bids shall be considered as in effect at the time the City awards the contract for construction of the Sewer Relocation. Accordingly, the City shall furnish the District with a copy of that policy prior to the commencement of any work on the Sewer Relocation.

8. The District shall accept a tender of conveyance of title to the Sewer Relocation from the City and shall quitclaim (as defined in paragraph 8(e)) to Mobil the easement for the abandoned portion of the Existing Sewer if the District determines to its reasonable satisfaction that:

(a) The City and its construction contractor have constructed the Sewer Relocation in strict accordance with the detailed engineering plans and specifications per District's Drawing No. 5-p-22, Sheet Nos. 1A and 1B, and in compliance with the Amended Standard Specifications;

(b) The City has satisfied all conditions of this Agreement;

(c) There are no legal actions pending or threatened concerning any of the provisions of this Sewer Relocation Agreement or any work of construction provided herein;

(d) There are no liens against the Sewer Relocation, that the City has fully complied with Sections 3184 and 3185 of the Civil Code and that at least sixty (60) calendar days have elapsed since the recording of a notice of completion;

(e) The Quitclaim Deed shall quitclaim all District easement rights in Mobil's property not reasonably required for the Existing Sewer and the Sewer Relocation. The City shall cause to be conveyed, to District's reasonable satisfaction, such documents and legal descriptions as may be necessary.

9. Compliance with the provisions of paragraph 8 of this Agreement will be in part determined by the Chief Engineer and the District's Field Engineering Section. The City hereby authorizes the Chief Engineer and the District's staff, at the expense of the City, to inspect construction of the Sewer Relocation, specifically the sewer pipe, pipe subbedding, pipe bedding, pipe laying, pipe testing and manholes. Written approval by the District's Field Engineering Section is required as a condition for acceptance of the Sewer Relocation. All other activities such as trenching, consolidation of backfill, paving and street work installed by or on behalf of the City must be done in accordance with local city and/or county or other governmental requirements and the inspection related to these activities is the responsibility of the City.

10. The City shall inspect and supervise the construction of the Sewer Relocation as owner of the Project. The City shall provide continuous access for the District's staff or their agents in order to afford the District the full and complete ability to inspect, at the expense of the City, the construction of the Sewer Relocation, including items identified in paragraph 9. Construction survey for the Sewer Relocation is the responsibility of the City or its agents. The City or its agents shall provide all surveying required to construct the Sewer Relocation and shall provide to the District, at the completion of construction, "as-built" drawings that are stamped by a Registered Professional Civil Engineer or Registered Land Surveyor licensed to practice in the State of California. The District may, at no cost to the City, survey to determine grade and alignment and conduct a final survey. The City shall cause to be made available for inspection by a District representative, the sewer pipe and manholes at the manufacturer's facility. The sewer pipe and manhole shafts must be approved by a District representative prior to delivery to the job site. The District shall inspect the sewer pipe and manholes at the manufacturer's facility within ten (10) working days of a written request from the City for such inspection. Subsequently, the District shall provide notification to the City of the approval or a written rejection of the sewer pipe or manholes within 5 working days of the inspection. The City shall construct the Sewer Relocation in strict accordance with the detailed engineering plans and specifications per District's Drawing No. 5-p-22, Sheet Nos. 1A and 1B, and in compliance with the Amended Standard Specifications and in compliance with the provisions of this Agreement and all documents incorporated in this Agreement. The District's inspection is for the purpose of determining whether the District will accept the Sewer Relocation.

11. Upon completion of construction and before diversion of wastewater flow into the Sewer Relocation, the City or its agents shall conduct a Closed Circuit Television (CCTV) inspection of the Sewer Relocation in accordance with Section 500-1.1.5 of the Amended Standard Specifications as provided by the District in paragraph 7. A digital and video tape recording of the CCTV shall be submitted to the District for review. Within 30 days, the District shall review the recording and inform

the City in writing of any damaged or poorly constructed pipe and pipe joints. The City then shall cause to be replaced any and all damaged or poorly constructed pipe and pipe joints at no cost to the District, prior to the District accepting ownership of the Sewer Relocation.

12. The City shall reimburse the District for the total cost of the District's construction inspection for the Sewer Relocation, as described in paragraph 9, which is to be determined by a final accounting prepared by District. The City shall reimburse the District in accordance with following procedures:

(a) The construction inspection costs will include currently-effective percentage markups added to total salaries, wages and equipment costs to cover overhead and administration.

(b) The District's Field Engineering Section or its inspection staff shall prepare a "Daily Log Sheet" for each day of construction for the Sewer Relocation. Each "Daily Log Sheet" shall include a chronological description, including but not limited to, any and all work activities, equipment, labor and materials related to the Sewer Relocation. Each Daily Log Sheet will be provided to the City within 5 working days after the day of work.

(c) The District shall furnish to City, within ninety (90) calendar days after the District approves and accepts the Sewer Relocation, an original billing invoice that gives a final accounting of the actual construction inspection costs that includes an itemization of names, number of hours spent on inspection, and hourly wage. The original billing invoice will be transmitted to Torrance Public Works Department, 20500 Madrona Avenue, Torrance, CA 90503, ATTN: Mr. Craig Bilezerian.

(d) The City shall pay to the District the billing amount, as verified by the City, within forty-five (45) calendar days of demand. If the City's payment is not received within forty-five (45) calendar days after the date of the invoice, the District shall recover interest on all amounts due beginning forty-five (45) calendar days from the date of the invoice at the interest rate of six percent (6 %) per annum.

13. The City shall advise the District of the anticipated dates for construction of the Sewer Relocation and the District may file and record a *Notice of Non-responsibility* in accordance with Civil Code Section 3094. The City agrees that construction of the Project and Sewer Relocation shall not restrict the District's access to the Existing Sewer for operation and maintenance and emergency purposes. The City shall bind its construction contractor to diligently pursue completion of the Sewer Relocation. The District shall not be regarded as Owner until the District accepts the title to the Sewer Relocation; however, to minimize any potential conflict, the City shall cause its contractor to provide

performance and labor and materials bonds in full compliance with requirements and procedures set forth in the Amended Standard Specifications provided by the District in accordance with paragraph 7 of this Agreement. Copies of the bonds must be furnished to the Chief Engineer prior to commencement of any construction work.

14. Upon completion of the construction of the Sewer Relocation and approval by the District's Field Engineering Section, the City shall cause to be submitted to the District for review and approval by the District, one (1) set of "as-built" plans for the Sewer Relocation.

15. Upon completion of the construction of the Sewer Relocation and written approval by the District's Field Engineering Section, the City shall sign, verify and record a *Notice of Completion* in accordance with Section 3093 of the Civil Code and in general form of Exhibit "B" attached to this Agreement. Without cost to the District, the City at the time of completion of construction shall execute and deliver to the District a recordable Bill of Sale acceptable to the District and in the general form of Exhibit "C" attached to this Agreement. The District may accept ownership of the Sewer Relocation no earlier than sixty (60) calendar days after recordation of the Notice of Completion of construction of the Sewer Relocation, by recording the Bill of Sale. The District will not accept the Sewer Relocation unless it is free and clear of all liens or claims, unless it is constructed to the District's satisfaction in accordance with the requirements of this Agreement, and until amendments to the 1954 Agreement have been approved and accepted by the District.

16. Upon acceptance and recordation of title to the Sewer Relocation, the District shall use, operate and maintain the Sewer Relocation as part of the District's sewerage system.

17. The City or its agents shall be responsible for all costs, expenses, losses and liabilities relating to the construction of the Sewer Relocation, and shall indemnify, defend, and hold the District, its officers, agents, and employees, and other County Sanitation Districts of Los Angeles County, from all claims, demands, actions, costs, liabilities, losses, damages, including claims for personal injury or property damages arising from or in any way associated with the following:

(a) Ownership, operation, or maintenance of the Sewer Relocation prior to its acceptance by the District;

(b) Construction of the Sewer Relocation, including but not limited to trenching, backfill work above the pipe zone, and surface restoration.

This indemnification provision shall exist for 15 years after acceptance by the District, except, however that this indemnification will terminate for that portion of the Sewer Relocation, if the

District or its agents, conduct or perform any repair, maintenance or emergency work that would disturb or modify the existing condition of the Sewer Relocation as constructed by the City.

18. The District shall hold the City and its officers, agents, and employees harmless from all claims, demands, costs, expenses and liability or loss, and assume the defense of all actions for any damages or injuries arising out of the use, ownership, operation, or maintenance of the Sewer Relocation subsequent to the date of acceptance by the District. The City shall remain liable for claims, demands, costs, expenses and liability or loss arising from ownership, operation, maintenance and construction of the Sewer Relocation as provided in paragraph 17.

19. This Agreement does not provide either the City or its agents any right to sewer capacity in the District's sewerage system, or waiver or reduction of any fee or charge that would otherwise be due to the District. Discharge may be available only upon payment and acceptance of the District's connection fees and compliance with all the rules and regulations in effect at the time of connection fee acceptance.

20. The Chief Engineer, or his designee, may accept, without further action by the District's board of directors, the Sewer Relocation and any required easements and execute and deliver the Quitclaim Deed on behalf of the District, as contemplated in paragraphs 5 and 8, and make other determinations and approvals on behalf of the District to fulfill all responsibilities of the District under this Agreement.

21. The City and the District shall do such additional acts as may be deemed necessary by the Chief Engineer to carry out the purpose of this Agreement. The Chief Engineer is delegated the authority to act on behalf of the District in carrying out the terms of this Agreement.

22. This Agreement contains the entire agreement between the parties concerning the rights and obligations assumed in this Agreement. Any subsequent representations or modifications shall be of no force or effect, except for a subsequent modification in writing executed by both parties.

23. City designates Mr. Craig Bilezerian and Ms. Elizabeth Overstreet, whose address and telephone numbers are, 20500 Madrona Avenue, Torrance, CA 90503 and (310) 618-3054 and (310) 618-3074 to be its city engineer and project manager, respectively. Any change is to be by prior written notification to District.

24. If any term or provision of this Agreement is held to any extent to be invalid or unenforceable, the remainder of this Agreement will not be affected.

25. Each party has participated in negotiating and drafting this Agreement, so if an ambiguity or a question of intent or interpretation arise, this Agreement is to be construed as if the parties had

drafted it jointly, as opposed to being construed against a party because it was responsible for drafting one or more provisions of the Agreement.

26. A waiver of any breach of any provision of this Agreement or of any failure to comply with any requirement of this Agreement will not be deemed a waiver of any other provision or requirement of this Agreement, and no waiver will be valid unless in writing and executed by the waiving party. An extension of time for performance of any obligation or act shall not be deemed an extension of time for performance of any other obligation or act.

27. This Agreement is to be executed in duplicate originals to be retained by each party.

28. This Agreement will inure to the benefit of and will be binding upon the parties and their respective successors and assigns.

29. This Agreement is to be governed and construed in accordance with California law.

30. Each party agrees to execute and deliver any instruments, and to perform any actions that may be necessary, or reasonably requested, in order to give full effect to this Agreement.

The City and the District are signing the Agreement as of the date stated in the introductory clause.

APPROVED AS TO FORM:

LEWIS, BRISBOIS, BISGAARD & SMITH, L.L.P.

District Counsel

COUNTY SANITATION DISTRICT NO. 5 OF LOS ANGELES COUNTY

Chairperson

APR 1 5 2009

ATTEST:

Secretary

APPROVED AS TO FORM:
JOHN L. FELLOWS III
City Attorney

By: Tatia Strader
Deputy City Attorney

CITY OF TORRANCE
A Municipal Corporation

By: Frank Scotto, Mayor

ATTEST:

By: Sue Herbers, City Clerk

DATED: 03-16-2009

(Signatures are to be notarized)

CALIFORNIA ALL-PURPOSE ACKNOWLEDGMENT

State of California

County of Los Angeles

On April 15, 2009 (Date) before me, Dana R Cortez, Notary Public (Here Insert Name and Title of the Officer),

personally appeared Kelly McDowell (Name(s) of Signer(s))

N/A

DANA R. CORTEZ
Commission # 1782881
Notary Public - California
Los Angeles County
My Comm. Expires Dec 1, 2011

Place Notary Seal Above

who proved to me on the basis of satisfactory evidence to be the person(~~s~~) whose name(~~s~~) is/are subscribed to the within instrument and acknowledged to me that he/~~she/they~~ executed the same in his/~~her/their~~ authorized capacity(~~ies~~), and that by his/~~her/their~~ signature(~~s~~) on the instrument the person(~~s~~), or the entity upon behalf of which the person(s) acted, executed the instrument.

I certify under PENALTY OF PERJURY under the laws of the State of California that the foregoing paragraph is true and correct.

WITNESS my hand and official seal.

Signature [signature] (Signature of Notary Public)

OPTIONAL

Though the information below is not required by law, it may prove valuable to persons relying on the document and could prevent fraudulent removal and reattachment of this form to another document.

Description of Attached Document

Title or Type of Document: Sewer Relocation Agreement

Document Date: April 15, 2009 Number of Pages: 16 (incl Ack)

Signer(s) Other Than Named Above: Frank SCotto Mayor City of Torrance
North Torrance Trunk Sewer Section 2

Capacity(ies) Claimed by Signer(s)

Signer's Name: Kelly McDowell
- ☐ Individual
- ☐ Corporate Officer — Title(s):
- ☐ Partner — ☐ Limited ☐ General
- ☐ Attorney in Fact
- ☐ Trustee
- ☐ Guardian or Conservator
- ☒ Other: Chairman Board of Directors

Signer Is Representing: County Sanitation Dist #5 of Los Angeles County

RIGHT THUMBPRINT OF SIGNER
Top of thumb here

Signer's Name:
- ☐ Individual
- ☐ Corporate Officer — Title(s):
- ☐ Partner — ☐ Limited ☐ General
- ☐ Attorney in Fact
- ☐ Trustee
- ☐ Guardian or Conservator
- ☐ Other:

Signer Is Representing:

RIGHT THUMBPRINT OF SIGNER
Top of thumb here

©2007 National Notary Association • 9350 De Soto Ave., P.O. Box 2402 • Chatsworth, CA 91313-2402 • www.NationalNotary.org Item #5907 Reorder: Call Toll-Free 1-800-876-6827

CALIFORNIA ALL-PURPOSE ACKNOWLEDGMENT

State of California
County of LOS ANGELES

On MARCH 16, 2009 (Date) before me, A. L. MANALILI, NOTARY PUBLIC (Here Insert Name and Title of the Officer),
personally appeared FRANK SCOTTO AND SUE HERBERS (Name(s) of Signer(s)),

who proved to me on the basis of satisfactory evidence to be the person(s) whose name(s) ~~is~~/are subscribed to the within instrument and acknowledged to me that ~~he/she~~/they executed the same in ~~his/her~~/their authorized capacity(ies), and that by ~~his/her~~/their signature(s) on the instrument the person(s), or the entity upon behalf of which the person(s) acted, executed the instrument.

I certify under PENALTY OF PERJURY under the laws of the State of California that the foregoing paragraph is true and correct.

WITNESS my hand and official seal.

Signature _____ (Signature of Notary Public)

A. L. MANALILI
Commission # 1792684
Notary Public - California
Los Angeles County
My Comm. Expires Mar 2, 2012

Place Notary Seal Above

OPTIONAL

Though the information below is not required by law, it may prove valuable to persons relying on the document and could prevent fraudulent removal and reattachment of this form to another document.

Description of Attached Document

Title or Type of Document: SEWER RELOCATION AGREEMENT, NORTH TORRANCE

Document Date: _____ Number of Pages: _____

Signer(s) Other Than Named Above: _____

Capacity(ies) Claimed by Signer(s)

Signer's Name: _____
- ☐ Individual
- ☐ Corporate Officer — Title(s): _____
- ☐ Partner — ☐ Limited ☐ General
- ☐ Attorney in Fact
- ☐ Trustee
- ☐ Guardian or Conservator
- ☐ Other: _____

Signer Is Representing: _____

RIGHT THUMBPRINT OF SIGNER
Top of thumb here

Signer's Name: _____
- ☐ Individual
- ☐ Corporate Officer — Title(s): _____
- ☐ Partner — ☐ Limited ☐ General
- ☐ Attorney in Fact
- ☐ Trustee
- ☐ Guardian or Conservator
- ☐ Other: _____

Signer Is Representing: _____

RIGHT THUMBPRINT OF SIGNER
Top of thumb here

©2007 National Notary Association • 9350 De Soto Ave., P.O. Box 2402 • Chatsworth, CA 91313-2402 • www.NationalNotary.org Item #5907 Reorder: Call Toll-Free 1-800-876-6827

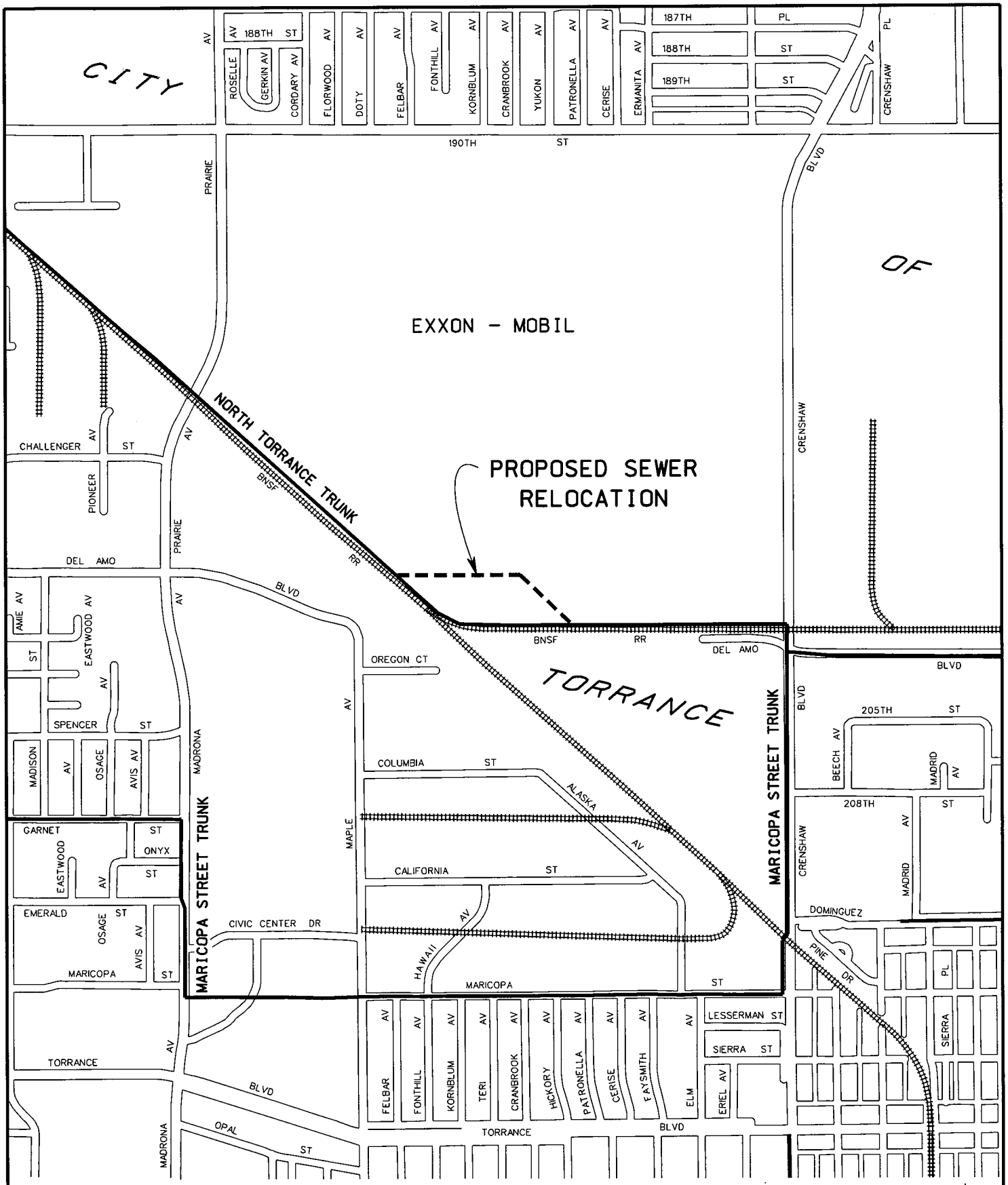

RELOCATION OF A PORTION OF
NORTH TORRANCE TRUNK SEWER, SECTION 2

COUNTY SANITATION DISTRICT NO. 5 OF LOS ANGELES COUNTY

EXHIBIT "A"

EXHIBIT "B"

Recording Requested By:

(Owner Name)
(Street Address)
(City, State, Zip)

NOTICE OF COMPLETION

In accordance with the provisions of Civil Code Section 3093, *(Owner Name)*, the owner of the work of improvement hereinafter described, hereby gives the following notice:

1. The date of completion of the work of improvement hereinafter described is *(Completion Date)*.
2. The owner of the work of improvement *is (Owner Name)*, *(Owner Address)*.
3. The nature of the interest or estate of the owner is a fee interest.
4. The work of improvement is located all within *(City and/or Unincorporated County of Los Angeles)*, California and is particularly described as follows:

   (Sewer Name), consisting of approximately *(Length of Sewer) linear* feet of *(Diameter of Sewer)* -inch diameter (*type of pipe)* vitrified clay/reinforced concrete/high density polyethylene pipe and appurtenant structures beginning at the intersection of *(Street)* and *(Street)*, *then (Direction in Name of Street and End Point)*.
5. The name of the original contractor for the work of improvement is *(All Contractors)*.

ATTEST:

(CITY OF TORRANCE)

By:_____
Title

By:_____
Title

(Signatures are to be notarized)

EXHIBIT "C"

RECORDING REQUESTED BY:
COUNTY SANITATION DISTRICTS
OF LOS ANGELES COUNTY
1955 WORKMAN MILL ROAD
P.O. BOX 4998
WHITTIER, CA 90607-4998

WHEN RECORDED, MAIL TO ABOVE ADDRESS

ATTN: RONNIE BURTNER
FACILITIES PLANNING DEPARTMENT

BILL OF SALE

For good and valuable consideration, receipt of which is hereby acknowledged, CITY OF TORRANCE, grants to County Sanitation District No. 5 of Los Angeles County, a county sanitation district organized and existing under the provisions of the County Sanitation District, Health and Safety Code Sections 4700 et seq., the following described property:

1. *(Sewer system description and location)*

CITY OF TORRANCE

By:_____

Name:_____

Title:_____

(Signatures are to be notarized)

RECORDING REQUESTED BY:

COUNTY SANITATION DISTRICTS
OF LOS ANGELES COUNTY
1955 WORKMAN MILL ROAD
P.O. BOX 4998
WHITTIER, CA 90607-4998

WHEN RECORDED, MAIL TO ABOVE ADDRESS

ATTN: RONNIE BURTNER
FACILITIES PLANNING DEPARTMENT

COUNTY	DISTRICT	T.G. PAGE	T.G. GRID	PROJECT #
Los Angeles	7	763	E-4, F-4	RSTPL-5249(014)
Federal Aid No. EA #:07-4U3154L				
Owner's Drawing No. 5-p-22				
FEDERAL PARTICIPATION: On the Project: Yes ☒ No☐ On the Utilities: Yes ☐ No☒				

Not Fully-Executed

CSD C# 4468 A

AMENDMENT TO SEWER RELOCATION AGREEMENT

This Amendment to Sewer Relocation Agreement ("Amendment") is dated MAY 20, 2009, and is between CITY OF TORRANCE, a municipal corporation, (the "City") and COUNTY SANITATION DISTRICT NO. 5 OF LOS ANGELES COUNTY, a county sanitation district organized and existing under the provisions of the County Sanitation District Act, Health & Safety Code Section 4700 et seq., (the "District").

The City and the District entered into a Sewer Relocation Agreement, dated April 15, 2009 (the "Agreement"), and recorded on April 20, 2009, in the Official Records of the Office of the County Recorder for Los Angeles County as Instrument No. 20090569787. Under the Agreement, the City agreed to relocate a portion of the District's existing sewer facility identified as the North Torrance Trunk Sewer, Section 2 (the "Existing Sewer") in and under ExxonMobil Oil Company's property to avoid any impact to the City's proposed extension of Del Amo Boulevard between Crenshaw Boulevard and Maple Avenue (the "Project").

The sewer relocation will be accomplished by construction of a new sewer facility, and appropriate closure of the abandoned portion of sewer (together the "Sewer Relocation") at the City's cost and expense.

The Sewer Relocation work will be included and constructed as a part of the City's Project.

The City intends to finance the Project using a combination of City, state, and federal funds.

According to federal funding guidelines, the construction cost for the Sewer Relocation is considered to be "non-participating" and will not be reimbursed to the City; therefore, the construction cost for the Sewer Relocation will be paid using only City and state funds.

In order to receive state and federal funding for the Project, the City now wishes to amend the Agreement to include certain clauses required by state and federal funding guidelines.

The City and the District therefore agree to amend the Agreement by adding the following:

1. The City shall relocate the District's Existing Sewer in accordance with Notice to Owner No. 3 dated April 13, 2009, shown in Exhibit "D".

2. Any deviations from the District's approved Drawing Nos. 5-p-22, Sheet 1A and 1B as described in paragraph 3 of the Agreement (the "Plans") initiated by either the City or the District, must be agreed upon by both the City and the District under a Revised Notice to Owner. Such Revised Notice to Owner, approved by the City and acknowledged by the District, will constitute an approved revision of the District's Plans and will become a part of the District's Plans. The City shall not commence any work on any deviation from the Plans before the District receives and agrees to the deviations described in the Revised Notice to Owner. Changes in the scope of the work will require an amendment to the Agreement in addition to a Revised Notice to Owner.

3. The District shall relinquish ownership of the abandoned portion of sewer (the "Replaced Facilities") to the City after completion of the Sewer Relocation in order for the City to proceed with construction of the Project.

4. The Existing Sewer is located in its present position pursuant to rights superior to those of the City and will be relocated at City's expense in accordance with the Agreement. The estimated cost to the District for the work being performed by the City's contractor is zero dollars ($0).

5. The District shall direct any of its questions regarding the Sewer Relocation work to the City's City Engineer for evaluation and final disposition.

6. The City shall not be obligated to pay for any increase in capacity or increased functionality of the District's facilities in the new location of the sewer.

7. The District shall give credit to the City for the salvage value of any material or parts salvaged and retained or sold by the District, if any. The Salvage Credit is zero dollars ($0) because the District will not remove or retain materials from the construction project.

8. The District's Existing Sewer is a publicly owned sewer. The City is therefore not entitled to receive a credit for accrued depreciation on the relocated portion of the sewer.

9. The District shall not bill the City for any costs accrued by the District prior to April 15, 2009, the date of the Agreement.

10. Replace paragraph 12 of the Agreement with the following:

The City shall reimburse the District for the total cost of the District's construction inspection for the Sewer Relocation, as described in paragraph 9, to be determined by a final accounting to be prepared by the District. The current estimate of the construction inspection costs of the Sewer Relocation will be approximately $35,000 (the "Estimated Inspection Cost"). The District shall maintain records of the actual inspection costs incurred in accordance with its standard cost accounting procedures. The District shall retain the detailed records or underlying source documents from which the billing invoice is complied for a period of at least three years from the date of the billing invoice. The District shall make such records and documents available for inspection and audit in accordance with Contract Cost Principles and Procedures as set forth in 48 CFR, Chapter 1, Part 31 by the City or federal auditors.

In the event the District's invoice for inspection costs exceeds 125% of the Estimated Inspection Cost, the City and the District shall enter into a second amendment to the Agreement (the "Second Amendment") before the City pays the billing invoice. Any and all increased inspection costs that are not included in the Estimated Inspection Cost that result from deviations described in paragraph 2 of this Amendment must be documented by a copy of the related Revised Notice to Owner and must be attached to the Second Amendment.

The City shall reimburse the District in accordance with the following procedures:

(a) The District's construction inspection costs will include currently effective percentage markups added to total salaries, wages, and equipment costs to cover overhead and administration.

(b) The District's Field Engineering Section or its inspection staff shall prepare a "Daily Log Sheet" for each day of construction for the Sewer Relocation. Each Daily Log Sheet will include a chronological description, including but not limited to, any and all work activities, equipment, labor, and materials related to the Sewer Relocation. The District shall provide each Daily Log Sheet to the City within five (5) working days after the day of work described in the Daily Log Sheet.

(c) The District shall notify the City, in writing, within thirty (30) days after completing its inspections, review of the CCTV recordings, and any other eligible costs related to the Sewer Relocation.

(d) The District shall furnish to the City within ninety (90) calendar days after the District approves and accepts the Sewer Relocation, an original billing invoice in quintuplicate on the District's letterhead signed by a responsible official of the District's organization that gives a final accounting of the actual construction inspection costs that includes an itemization of names, number of hours spent on inspection, and hourly wage. The District shall transmit the original billing invoice in quintuplicate to: Torrance Public Works Department, 20500 Madrona Avenue, Torrance, CA 90503, ATTN: Mr. Craig Bilezerian.

(e) The City shall pay to the District the amount billed, as verified by the City, within forty-five (45) calendar days of the date of the billing invoice. If the District does not receive the City's payment within forty-five (45) calendar days after the date of the invoice, the City shall pay interest to the District on all amounts due beginning forty-five (45) calendar days from the date of the invoice at the interest rate of six percent (6%) per annum.

(f) If the City does not receive a billing invoice with one hundred eighty (180) calendar days after the District approves and accepts the Sewer Relocation, the City shall provide written notification to the District of its intent to close its file within thirty (30) days. If the District does not provide its billing invoice within that thirty (30) day period, the District shall be deemed to have waived any right to recover such costs from the City.

11. If the Project is canceled or modified so as to eliminate the necessity of relocating the District's Existing Sewer and the District's corresponding need to provide construction inspection for the Sewer Relocation, the City shall notify the District in writing, and may cancel the Agreement and this Amendment

12. The District and the City acknowledge that the Project is a federal-aid highway and that 23 CFR 645 is incorporated into this Amendment.

All existing terms of and conditions of the Agreement remain in full force and effect and are incorporated into this Amendment.

The City and the District are signing the Amendment to Sewer Relocation Agreement as of the date stated in the introductory clause.

APPROVED AS TO FORM:

LEWIS, BRISBOIS, BISGAARD & SMITH, L.L.P.

By: _____
District Counsel

COUNTY SANITATION DISTRICT NO. 5 OF LOS ANGELES COUNTY

By: _____
Chairperson

ATTEST:

_____
Secretary MAY 20 2009

APPROVED AS TO FORM:
JOHN L. FELLOWS III
City Attorney

By: _____
(name)
Deputy City Attorney

CITY OF TORRANCE
A Municipal Corporation

By: _____
Frank Scotto, Mayor

ATTEST:

By: _____
Sue Herbers, City Clerk

DATED: 05-14-2009

(Signatures are to be notarized)

CALIFORNIA ALL-PURPOSE ACKNOWLEDGMENT

State of California
County of *Los Angeles*

On *May 20, 2009* (Date) before me, *-------Kimberly S. Compton, Notary Public-------,* (Here Insert Name and Title of the Officer)

personally appeared *----------Kelly McDowell----------* (Name(s) of Signer(s))

who proved to me on the basis of satisfactory evidence to be the person(~~s~~) whose name(~~s~~) is/~~are~~ subscribed to the within instrument and acknowledged to me that he/~~she/they~~ executed the same in his/~~her/their~~ authorized capacity(~~ies~~), and that by his/~~her/their~~ signature(~~s~~) on the instrument the person(~~s~~), or the entity upon behalf of which the person(~~s~~) acted, executed the instrument.

KIMBERLY S. COMPTON
Commission # 1831196
Notary Public - California
Los Angeles County
My Comm. Expires Feb 10, 2013

I certify under PENALTY OF PERJURY under the laws of the State of California that the foregoing paragraph is true and correct.

WITNESS my hand and official seal.

Signature *Kimberly S. Compton* (Signature of Notary Public)

Place Notary Seal Above

OPTIONAL

Though the information below is not required by law, it may prove valuable to persons relying on the document and could prevent fraudulent removal and reattachment of this form to another document.

Description of Attached Document

Title or Type of Document: *Relocation of Portion of North Torrance Trunk Sewer, Section 2*

Document Date: *May 20, 2009* Number of Pages: *5 pgs., Exhibit "D", 2 ~~acknowledgments~~*

Signer(s) Other Than Named Above: *Frank Scotto, City of Torrance*

Capacity(ies) Claimed by Signer(s)

Signer's Name: *Kelly McDowell*
- ☐ Individual
- ☐ Corporate Officer — Title(s): _____
- ☐ Partner — ☐ Limited ☐ General
- ☐ Attorney in Fact
- ☐ Trustee
- ☐ Guardian or Conservator
- ☑ Other: *Director*

Signer Is Representing: *County Sanitation District No. 5 of Los Angeles County*

RIGHT THUMBPRINT OF SIGNER
Top of thumb here

Signer's Name: _____
- ☐ Individual
- ☐ Corporate Officer — Title(s): _____
- ☐ Partner — ☐ Limited ☐ General
- ☐ Attorney in Fact
- ☐ Trustee
- ☐ Guardian or Conservator
- ☐ Other: _____

Signer Is Representing: _____

RIGHT THUMBPRINT OF SIGNER
Top of thumb here

©2007 National Notary Association • 9350 De Soto Ave., P.O. Box 2402 • Chatsworth, CA 91313-2402 • www.NationalNotary.org Item #5907 Reorder: Call Toll-Free 1-800-876-6827

CALIFORNIA ALL-PURPOSE ACKNOWLEDGMENT

State of California
County of LOS ANGELES

On MAY 14, 2009 (Date) before me, A. L. MANALILI, NOTARY PUBLIC (Here Insert Name and Title of the Officer),

personally appeared FRANK SCOTTO AND SUE HERBERS (Name(s) of Signer(s)),

who proved to me on the basis of satisfactory evidence to be the person(s) whose name(s) ~~is~~/are subscribed to the within instrument and acknowledged to me that ~~he/she~~/they executed the same in ~~his/her~~/their authorized capacity(ies), and that by ~~his/her~~/their signature(s) on the instrument the person(s), or the entity upon behalf of which the person(s) acted, executed the instrument.

A. L. MANALILI
Commission # 1792684
Notary Public - California
Los Angeles County
My Comm. Expires Mar 2, 2012

I certify under PENALTY OF PERJURY under the laws of the State of California that the foregoing paragraph is true and correct.

WITNESS my hand and official seal.

Signature _____ (Signature of Notary Public)

Place Notary Seal Above

OPTIONAL

Though the information below is not required by law, it may prove valuable to persons relying on the document and could prevent fraudulent removal and reattachment of this form to another document.

Description of Attached Document

Title or Type of Document: Amendment to Sewer Relocation Agreement

Document Date: _____ Number of Pages: _____

Signer(s) Other Than Named Above: _____

Capacity(ies) Claimed by Signer(s)

Signer's Name: _____
- ☐ Individual
- ☐ Corporate Officer — Title(s): _____
- ☐ Partner — ☐ Limited ☐ General
- ☐ Attorney in Fact
- ☐ Trustee
- ☐ Guardian or Conservator
- ☐ Other: _____

Signer Is Representing: _____

RIGHT THUMBPRINT OF SIGNER
Top of thumb here

Signer's Name: _____
- ☐ Individual
- ☐ Corporate Officer — Title(s): _____
- ☐ Partner — ☐ Limited ☐ General
- ☐ Attorney in Fact
- ☐ Trustee
- ☐ Guardian or Conservator
- ☐ Other: _____

Signer Is Representing: _____

RIGHT THUMBPRINT OF SIGNER
Top of thumb here

©2007 National Notary Association • 9350 De Soto Ave., P.O. Box 2402 • Chatsworth, CA 91313-2402 • www.NationalNotary.org Item #5907 Reorder: Call Toll-Free 1-800-876-6827

EXHIBIT "D"

Exhibit 14-D Notice to Owner

NOTICE TO OWNER

City of Torrance,
Public Works Department
NOTICE TO OWNER

No. 3

COUNTY	DISTRICT	T.G. PAGE	T.G. GRID	PROJECT #
Los Angeles	7	763	E-4, F-4	RSTPL-5249(014)
Federal Aid No. EA #:07-4U3154L				
Owner's Plan No. ST-1013				
Date: 4/22/09		**"On System" Yes** ☐ **No** ☒		

To: Los Angeles County Sanitation District
1955 Workman Mill Road
P.O. Box 4998
Whittier, CA 90607-4998
Attn: Ronnie Burtner, Facilities Planning Department

Because of the City of Torrance's transportation project to: Widen Del Amo Boulevard from Madrona Avenue to Maple Ave and extend Del Amo Boulevard from Maple Ave to Crenshaw Blvd which includes a grade separation in the City of Torrance, Los Angeles County.

Which affects your facilities: 24" sewer line as shown on Sheet SS-101.

You are hereby ordered to: Relocate your sewer line pursuant to your Drawing No. 5-p-22 Sht 1A &1B as part of the utility work included in the City's above referenced project.

Your work schedule shall be: from October 1, 2009 to April 15, 2010.

Notify: Craig Bilezerian, Engineering Manager, at telephone (310)618-3054 and Beth Overstreet, Engineering Manager, at telephone (310)618-3074, 72 hours prior to initial start of work, and an additional 24 hours notification for subsequent starts when the work schedule is interrupted.

Existing facilities are located in their present position pursuant to rights superior to those of the City and will be relocated at CITY's expense.

APR 27 2009 AM 10:22

DOC # 1255818

Robert Beste
Public Works Director
City of Torrance

Tremblay MNT Ronnie RB

Cc: Resident Engineer
Permit

THIS NOTICE DOES NOT CONSTITUTE A PERMIT. OBTAIN AN ENCROACHMENT PERMIT BEFORE STARTING WORK.
Distribution: 1)Owner, 2)RE- File , 3)DLAE –File, 4) District Utility Coordinator - File

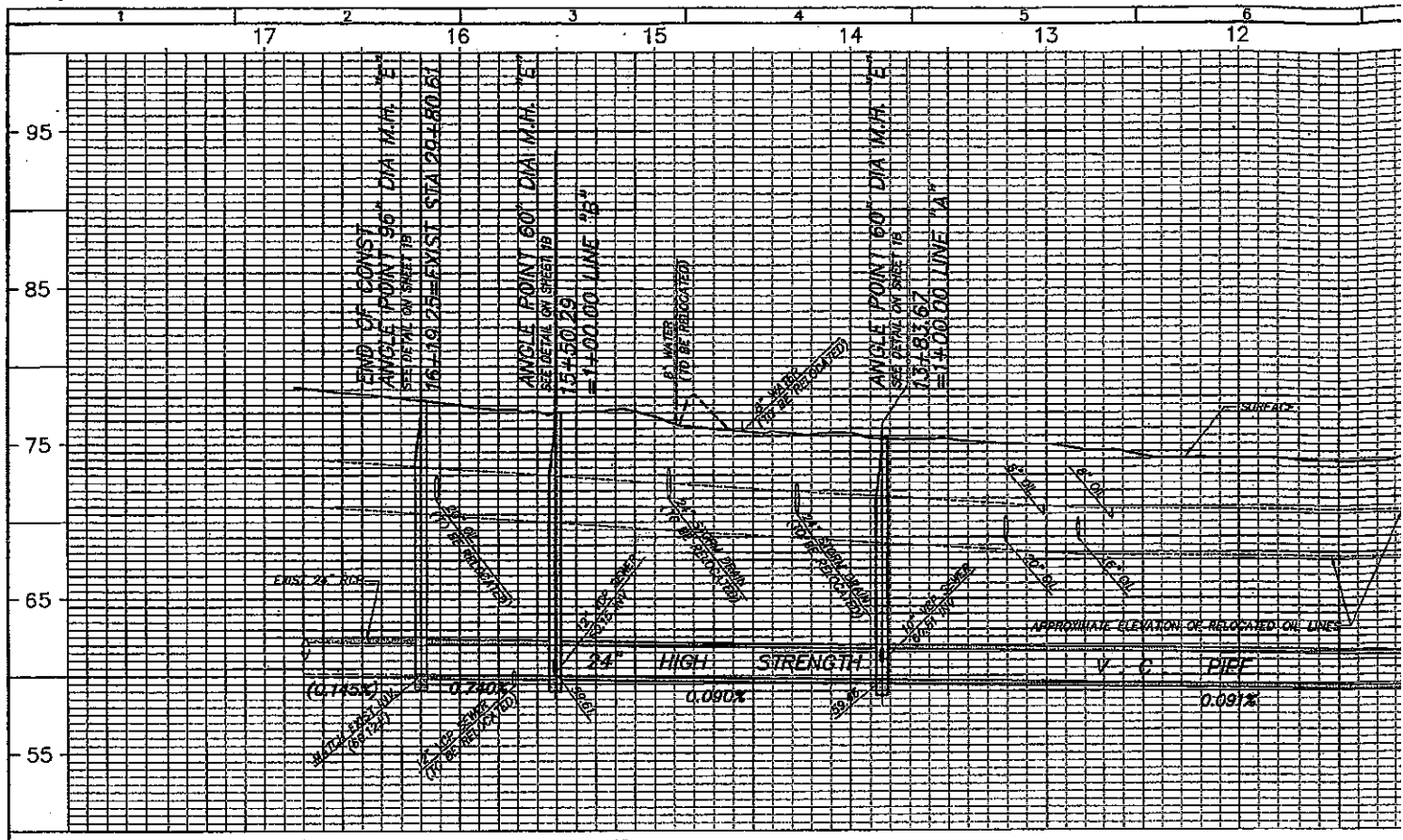
17
16
15
14
13
12
95
85
75
65
55
END OF CONST
ANGLE POINT 96" DIA M.H. "E"
SEE DETAIL ON SHEET 1B
16+19.25=EXIST STA 29+80.61
ANGLE POINT 60" DIA M.H. "E"
SEE DETAIL ON SHEET 1B
15+50.29
=1+00.00 LINE "B"
ANGLE POINT 60" DIA M.H. "E"
SEE DETAIL ON SHEET 1B
13+83.67
=1+00.00 LINE "A"
SURFACE
APPROXIMATE ELEVATION OF RELOCATED OIL LINES
24" HIGH STRENGTH V. C. PIPE
(0.195%)
0.740%
0.090%
0.091%

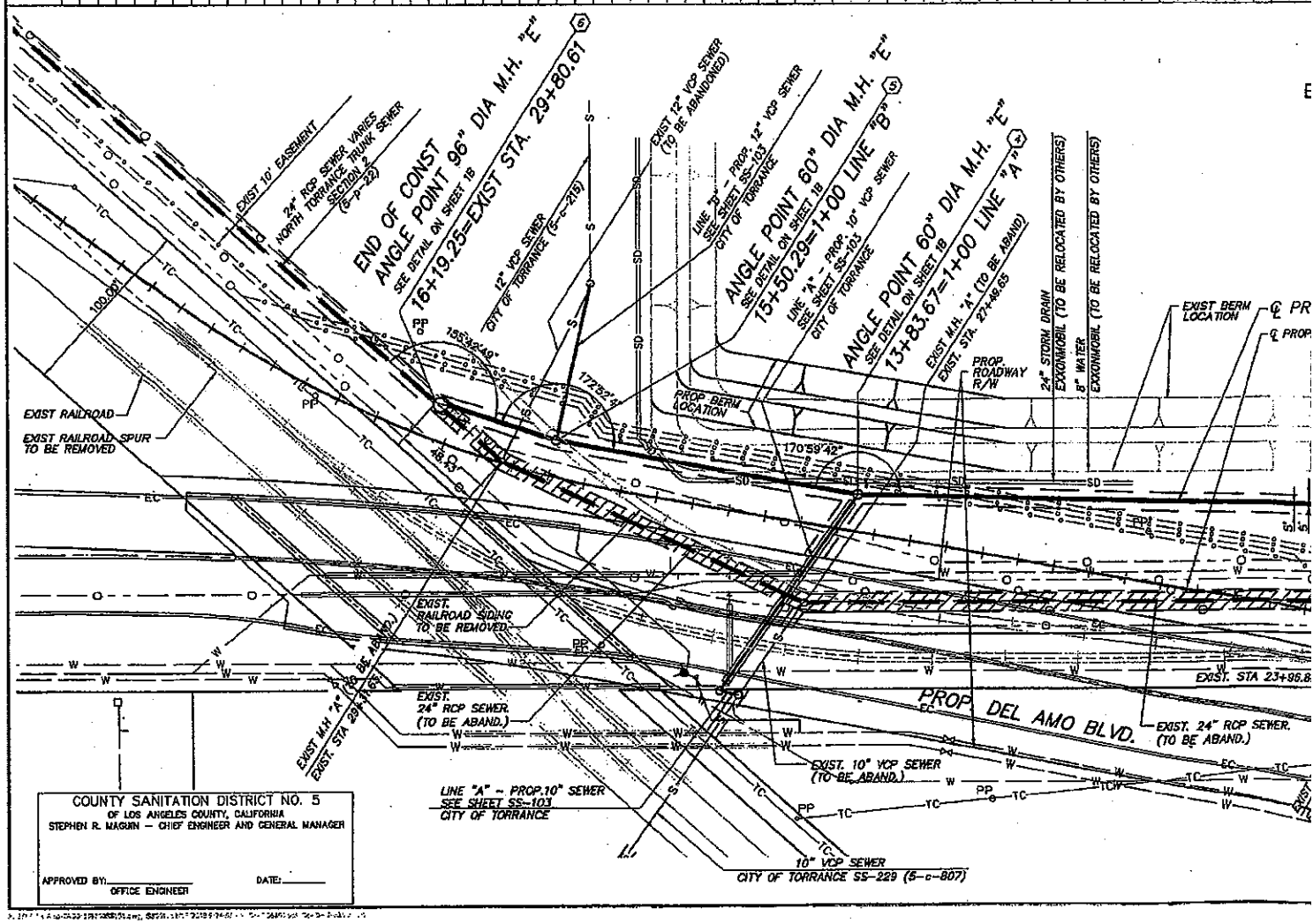
END OF CONST
ANGLE POINT 96" DIA M.H. "E"
SEE DETAIL ON SHEET 1B
16+19.25=EXIST STA. 29+80.61
ANGLE POINT 60" DIA M.H. "E"
SEE DETAIL ON SHEET 1B
15+50.29=1+00 LINE "B"
ANGLE POINT 60" DIA M.H. "E"
SEE DETAIL ON SHEET 1B
13+83.67=1+00 LINE "A"
EXIST 10' EASEMENT
24" RCP SEWER VARIES
NORTH TORRANCE TRUNK SEWER
SECTION 2
(5-p-22)
12" VCP SEWER
CITY OF TORRANCE (5-c-215)
EXIST 12" VCP SEWER
(TO BE ABANDONED)
LINE "B" - PROP. 12" VCP SEWER
SEE SHEET SS-103
CITY OF TORRANCE
LINE "A" - PROP. 10" VCP SEWER
SEE SHEET SS-103
CITY OF TORRANCE
EXIST M.H. "A" (TO BE ABAND.)
EXIST. STA. 27+49.65
PROP. ROADWAY R/W
24" STORM DRAIN
EXXONMOBIL (TO BE RELOCATED BY OTHERS)
8" WATER
EXXONMOBIL (TO BE RELOCATED BY OTHERS)
EXIST BERM LOCATION
PROP BERM LOCATION
EXIST RAILROAD
EXIST RAILROAD SPUR TO BE REMOVED
EXIST. RAILROAD SIDING TO BE REMOVED
EXIST. 24" RCP SEWER. (TO BE ABAND.)
EXIST M.H. "A" (TO BE ABAND.)
EXIST. STA 29+16.51
EXIST. STA 23+96.8
PROP DEL AMO BLVD.
EXIST. 24" RCP SEWER. (TO BE ABAND.)
EXIST. 10" VCP SEWER (TO BE ABAND.)
LINE "A" - PROP.10" SEWER
SEE SHEET SS-103
CITY OF TORRANCE
10" VCP SEWER
CITY OF TORRANCE SS-229 (5-c-807)
COUNTY SANITATION DISTRICT NO. 5
OF LOS ANGELES COUNTY, CALIFORNIA
STEPHEN R. MAGUIN — CHIEF ENGINEER AND GENERAL MANAGER
APPROVED BY:
OFFICE ENGINEER
DATE:

WATER RECLAMATION
SOLID WASTE MANAGEMENT

COUNTY SANITATION DISTRICTS
OF LOS ANGELES COUNTY

1955 Workman Mill Road, Whittier, CA 90601-1400
Mailing Address: P.O. Box 4998, Whittier, CA 90607-4998
Telephone: (562) 699-7411, FAX: (562) 699-5422
www.lacsd.org

STEPHEN R. MAGUIN
Chief Engineer and General Manager

April 29, 2009

RECEIVED
MAY 01 2009
Public Works Department

Craig Bilezerian, Engineering Manager
Public Works Department
City of Torrance
20500 Madrona Avenue
Torrance, CA 90503

Dear Mr. Bilezerian:

North Torrance Trunk Sewer, Section 2

The Board of Directors for the County Sanitation District No. 5 of Los Angeles County (District) has approved the agreement between the City of Torrance and the District for the proposed sewer relocation for the subject sewer. Enclosed for your records is the conformed copy of the recorded agreement.

The agreement stipulates that the Districts' Field Engineering Section shall inspect the installation of the sewer and manholes during construction. All engineering submittals related to the construction of the sewer shall be reviewed and approved by the District prior to construction. Please inform your contactor performing the sewer construction to submit four (4) copies of each submittal to the District's Sewer Design Section, Attention: Ms. Martha Tremblay, at the address listed above. A courtesy "Shop Drawing Transmittal Form" has been enclosed for their use. The contractor shall allow a minimum of 30 days for the review of each submittal. For inspection, please contact Mr. Paul Perkins, District's Field Engineering Manager, at (310) 830-8050 at least two weeks prior to the start of construction.

The agreement also stipulates that the City shall obtain and name the District as an additional insured on a policy of liability insurance in effect during the construction of the sewer. Please submit these documents to my attention. If you have any questions regarding the above, please give me a call at (562) 908-4288, extension 2766.

Very truly yours,

Stephen R. Maguin

Ronnie Burtner
Senior Engineer
Property Management Section

RB:eg

Enclosures

c: Martha Tremblay
Paul Perkins
Samuel Espinoza

DOC #1257091

Recycled Paper

SHOP DRAWING TRANSMITTAL FORM

Date:	Project Name: North Torrance Trunk Sewer, Section 2 (Contract No. 4468)
From: *Contractor*	To: COUNTY SANITATION DISTRICTS OF LOS ANGELES COUNTY Attn: Ms. Martha Tremblay 1955 Workman Mill Road P.O. Box 4998 Whittier, CA 90607

Drawings or Data are Submitted: For Approval ☐ For Information ☐

Number of Copies	Drawing Number	Supplier and Subject of Submittal	Specification Section(s)

Complete either (a) or (b) — Check One

(a) We have verified that the material or equipment contained in this submittal meets all requirements specified or shown (no exceptions). ☐

(b) We have verified that the material or equipment contained in this submittal meets all the requirements specified or shown, except for the following deviations (list deviations or attach letter). ☐

This is: Check one

1st submittal ☐

2nd submittal ☐

☐ submittal

Submittal No. _____

Remarks:	Contractor's Authorized Signature

APPENDIX XIV

DOW CHEMICAL COMPANY

PURCHASE & SALE AGREEMENT

DEL AMO BLVD EXTENSION, T-30

AGREEMENT FOR PURCHASE AND SALE AND ESCROW INSTRUCTIONS
DOW Chemical Company

The Table below summarizes information and requirements from the above-referenced Agreement between the City and DOW Chemical Company. The purpose is to inform a prospective Bidder and Contractor.

Sec. 3.2	☐ Buyer hereby agrees to defend, indemnify and hold harmless Seller from and against all claims relating to: ▪ any liens or encumbrances caused by Buyer ▪ Buyer's entry onto Property prior to the Close of Escrow
Sec. 3.3	☐ Buyer shall construct a deceleration/staging lane as part of its Project. ☐ Buyer shall also provide a westbound left-turn lane
Exh "C-3" Paragraph 3	Temporary Easement for Construction Purposes ☐ Rights to property shall commence 30 days after written notification of the commencement of construction ☐ Rights will be in effect until written notification that easement is no longer needed **OR** 18 months from initiation of Temp Easement (whichever is earlier)
Exh "C-4" Paragraph 3	Temporary Easement for On-site Improvements ☐ Rights to property shall commence 30 days after written notification of the commencement of construction ☐ Rights will be in effect until written notification that easement is no longer needed **OR** 18 months from initiation of Temp Easement (whichever is earlier)

AGREEMENT FOR PURCHASE AND SALE AND ESCROW INSTRUCTIONS

BY AND BETWEEN

THE DOW CHEMICAL COMPANY,

("SELLER")

AND

CITY OF TORRANCE

("BUYER")

TABLE OF CONTENTS

Page

1. PROPERTY 1

2. PURCHASE PRICE. 2
   2.1 Amount 2
   2.2 Payment of Purchase Price 2

3. EARLY POSSESSION. 3
   3.1 Construction Activities 3
   3.2 Indemnity 3

4. ESCROW 3
   4.1 Opening of Escrow 3
   4.2 Escrow Instructions 4

5. INSPECTION AND REVIEW 4
   5.1 Title Matters 4
   5.2 Continuing Due Diligence 5

6. CLOSE OF ESCROW 6
   6.1 Close of Escrow; Closing Date 6
   6.2 Recordation; Release of Funds and Documents 6

7. DELIVERY OF DOCUMENTS REQUIRED FROM BUYER AND SELLER 6
   7.1 Buyer's Obligations 6
   7.2 Seller's Obligations 6

8. TITLE INSURANCE POLICY. 7
   8.1 Title Policy 7
   8.2 Payment for Title Policy 7

9. REAL PROPERTY TAXES AND ASSESSMENTS 8

10. CONDITIONS PRECEDENT TO CLOSING. 8
    10.1 Conditions Precedent to Buyer's Obligations 8
    10.2 Conditions Precedent to Seller's Obligations 8
    10.3 Termination of Agreement 9

11. POSSESSION 9

12. ALLOCATION OF COSTS. 9
    12.1 Buyer's Costs 9
    12.2 Seller's Costs 10

Page

13. CONDEMNATION 10

14. REPRESENTATIONS AND WARRANTIES [DAVE, ALL OF THESE REPS & WARRANTIES (EXCEPT 14.4 WHERE IN A DRAFT PURCHASE AGREEMENT I FOUND IN YOUR CORRESPONDENCE CLIP 10
- 14.1 Title 10
- 14.2 Delivery 10
- 14.3 Actions 10
- 14.4 Hazardous Substances 10
- 14.5 Remediation 11
- 14.6 Remedy 12

15. COVENANTS OF SELLER 12

16. MISCELLANEOUS 13
- 16.1 Assignment 13
- 16.2 Notices 13
- 16.3 Fair Meaning 14
- 16.4 Headings 14
- 16.5 Choice of Laws; Litigation Matters 14
- 16.6 Nonliability of Buyer Officials 14
- 16.7 Gender; Number 14
- 16.8 Survival 15
- 16.9 Time of Essence 15
- 16.10 Waiver or Modification 15
- 16.11 Broker's Fees 15
- 16.12 Duplicate Originals 15
- 16.13 Severability 15
- 16.14 Exhibits 15
- 16.15 Authority 15
- 16.16 Entire Agreement; Amendment 15

EXHIBITS

Exhibit A	Description of Permanent Roadway Easement (1)
Exhibit B	Depiction of Permanent Roadway Easement (1)
Exhibit C	Grant of Permanent Roadway Easement (1)
Exhibit A-1	Description of Permanent Roadway Easement (2)
Exhibit B-1	Depiction of Permanent Roadway Easement (2)
Exhibit C-1	Grant of Permanent Roadway Easement (2)
Exhibit A-2	Description of Utility Easement
Exhibit B-2	Depiction of Utility Easement
Exhibit C-2	Grant of Utility Easement
Exhibit A-3	(Intentionally Omitted)
Exhibit B-3	Depiction of Temporary Construction Easement
Exhibit C-3	Grant of Temporary Construction Easement

Page

Exhibit A-4	(Intentionally Omitted)
Exhibit B-4	Depiction of Temporary Easement For On-Site Improvements
Exhibit C-4	Grant of Temporary Easement For On-Site Improvements
Exhibit A-5	Description of Electrical Utility Relocation Easement
Exhibit B-5	Depiction of Electrical Utility Relocation Easement
Exhibit C-5	Grant of Electrical Utility Relocation Easement
Exhibit D	Depiction of Deceleration Lane From Project Plans

AGREEMENT FOR PURCHASE AND SALE AND ESCROW INSTRUCTIONS

THIS AGREEMENT FOR PURCHASE AND SALE AND ESCROW INSTRUCTIONS ("Agreement") is made and entered into as of May 29, 2009 ("Effective Date") by and between THE DOW CHEMICAL COMPANY, a Delaware corporation ("Seller") and the CITY OF TORRANCE, a California municipal corporation ("Buyer").

RECITALS:

A. Seller is the owner of that certain real property located in the City of Torrance, County of Los Angeles, State of California, referred to as Assessor Parcel No. 7352-002-017 (the "Real Property").

B. Buyer desires to purchase and Seller desires to sell and convey the following (collectively referred to herein as the "Property"): (i) two Permanent Roadway Easements described in Exhibits "A" and "A-1" and depicted in Exhibits "B" and "B-1" attached hereto and made a part hereof; (ii) a Utility Easement described in Exhibit "A-2" and depicted in Exhibit "B-2" attached hereto and made a part hereof; (iii) a Temporary Construction Easement depicted in Exhibit "B-3" attached hereto and made a part hereof; (iv) Temporary Easement for On-Site Improvements depicted in Exhibit "B-4" attached hereto and made a part hereof; and (v) Electrical Utility Relocation Easement described in Exhibit "A-5" and depicted in Exhibit "B-5" attached hereto and made a part hereof, on the terms and conditions set forth herein.

C. On October 8, 2008, Buyer issued an offer letter to Seller pursuant to Government Code Section 7267.2 in order to acquire the Property for purposes of roadway improvements, specifically the extension of Del Amo Boulevard from Madrona Avenue to Crenshaw Boulevard. ("Project.") Buyer had previously issued its notice of intent to appraise the Property and had caused an appraisal to be prepared in accordance with Government Code Section 7267.1(b). On or about December 2, 2008, Buyer filed an action in eminent domain to acquire the Property, entitled City of Torrance v. Dow Chemical Company, et al., Los Angeles County Superior Court Case No. BC402958 ("Condemnation Action"). This Agreement is entered into in accordance with Government Code Section 7267.1(a) lieu of condemnation proceedings under Code of Civil Procedure Section 1245.210, *et seq.*

AGREEMENT:

NOW, THEREFORE, in consideration of the foregoing recitals and mutual covenants herein contained, the parties hereto agree as follows:

1. PROPERTY. Subject to all of the terms, conditions and provisions of this Agreement, and for the consideration herein set forth, Seller hereby agrees to sell to Buyer and Buyer hereby agrees to purchase from Seller the Property.

2. PURCHASE PRICE.

2.1 Amount. The purchase price which Seller agrees to accept and Buyer agrees to pay for the Property is the sum of FIVE MILLION SIX HUNDRED THOUSAND DOLLARS ($5,600,000.00) ("Purchase Price"). The parties agree that Purchase Price reflects the full payment that Seller will receive from Buyer for the Property, and is inclusive of any claims for loss of goodwill, lost profits, lost business income and relocation benefits. Seller waives all any right it may have to seek additional compensation for such claims.

2.2 Payment of Purchase Price.

2.2.1 Initial Deposit. Within three (3) business days after the execution of this Agreement, Buyer shall deposit in Escrow in good funds (as defined below) the sum of One Hundred Thousand Dollars ($100,000.00) (the "Initial Deposit"). The Initial Deposit shall, immediately upon delivery, become non-refundable, subject only to Seller's performance of its obligations hereunder, and (ii) be applicable to the Purchase Price should the Escrow close.

2.2.2 Second Deposit. On or before the expiration of the Due Diligence Period, and provided that Buyer has delivered to Seller Buyer's Due Diligence Notice approving the Property, Buyer shall deposit in Escrow in good funds (as defined below) the additional sum of Four Hundred Sixty Thousand Dollars ($460,000.00) (the "Second Deposit"). The Second Deposit shall, immediately upon delivery, (i) become non-refundable, subject only to Seller's performance of its obligations hereunder, and (ii) be applicable to the Purchase Price should the Escrow close. If Buyer delivers to Seller Buyer's Due Diligence Notice but fails to deliver the Second Deposit as required herein, Seller shall have the right to terminate this Agreement and to retain the Initial Deposit. As used in this Agreement, the term "Deposit" shall initially mean and refer to the Initial Deposit and all interest earned thereon and, upon Buyer's delivery of the Second Deposit, shall thereafter mean and refer to the aggregate of the Initial Deposit and the Second Deposit and all interest earned thereon.

2.2.3 Closing Payment. On or before 1:00 p.m. on the business day preceding the "Closing Date" (as that term is defined in Section 6.1), or such earlier time as reasonably required by "Escrow Holder" in order to close "Escrow" (as those terms are defined in Section 4.1) on the Closing Date, and provided that Escrow is otherwise ready to close in all other respects (except for Buyer's required deliveries hereunder), Buyer shall deposit with Escrow Holder in good funds an amount equal to the Purchase Price plus all other costs and expenses chargeable to Buyer hereunder, less the Deposit.

"Good funds" shall mean a wire transfer of funds, cashier's or certified check drawn on or issued by the offices of a financial institution located in the State of California, or cash. Buyer and Seller each agree to execute and deliver to Escrow Holder such documents as required by Escrow Holder for the reporting of interest credited to each party. Escrow Holder shall place the Deposit in a government-insured interest bearing account with all interest accruing thereon for the benefit of Buyer.

3. EARLY POSSESSION.

3.1 Construction Activities. Commencing upon the Opening of Escrow and continuing thereafter until the Close of Escrow, Seller hereby grants to Buyer and its employees, representatives, agents and contractors, a right of entry on, over and across and through the Property for purposes of performing pre-construction and construction work and other related activities incidental thereto with respect to the Property. All work performed by Grantee shall be at Grantee's sole cost and expense. Buyer's right of entry set forth herein shall be equivalent to the right of prejudgment possession under California Civil Code Section 1255.401, *et seq.* and Buyer shall be afforded all of the rights and privileges under Section 1255.401, *et seq.* as if Buyer had secured an Order for Prejudgment Possession allowing Buyer to take possession of the Property. The parties agree that Buyer's possession shall remain undisturbed through the pendency of Escrow and that Buyer shall maintain possession after the Closing Date. The right of entry granted hereunder shall terminate upon the earlier of a grant of an order for prejudgment possession in the Condemnation Action, or Close of Escrow hereunder. If escrow does not close, and Buyer dismisses or otherwise settles the Condemnation Action without securing title or any order for prejudgment possession relating to the Property, the right of entry granted hereunder shall terminate as of the effective date of the termination of escrow, and Buyer shall thereupon vacate the Property, and restore the Property as nearly as practicable to its condition prior to Buyer's entry thereon.

3.2 Indemnity. Except to the extent caused by the gross negligence or willful misconduct of Seller (or its employees, consultants, contractors, agents or representatives), Buyer hereby agrees to defend, indemnify and hold harmless Seller, its employees, officers, partners, agents, and representatives from and against all actions, proceedings, claims, demands, penalties, loss, liability, expenses, damages, and costs (including attorneys' fees and costs) arising from or in any way relating to (i) any liens or encumbrances caused or permitted by Buyer, and (ii) Buyer's entry onto, work performed on or use of the Property prior to the Close of Escrow pursuant to the right of entry granted pursuant to this Section 3.

3.3 Buyer's Construction Commitments. In exercising the rights granted hereunder, and in additional consideration therefor, Buyer shall construct a deceleration /staging lane as part of its Project, located generally between stations 48+8- and 51+50, as depicted generally on the reduced construction plan attached hereto as Exhibit "D." In addition, Buyer shall also provide a westbound left-turn lane permitting access into the main entrance driveway for the Dow Facility shown at approximately Station 53+00 on Project's approved construction plans. The dimensions, length and width, of the left-turn lane will be designed by Buyer in accordance with applicable engineering guidelines and requirements to accommodate both vehicle and truck traffic. It is understood between Buyer and Seller that only westbound left-turn movements into the Dow Facility will be permitted from this lane, and that left-turns exiting the Dow Facility will be prohibited. The parties understand and acknowledge that the Project will not provide for the installation of a traffic signal at the Dow main entrance driveway.

4. ESCROW.

4.1 Opening of Escrow. Closing of the sale of the Property shall take place through an escrow ("Escrow") to be established within three (3) business days after the execution of this

Agreement by the parties hereto, with Fidelity National Title Company ("Escrow Holder") at its office located at 1300 Dove Street, Suite 310, Newport Beach, CA 92660. The opening of the Escrow (the "Opening of Escrow") shall be deemed to be the date that a fully executed copy of this Agreement is delivered to the Escrow Holder. Escrow Holder is instructed to notify Buyer and Seller in writing of the date of the Opening of Escrow.

4.2 Escrow Instructions. This Agreement, once deposited in Escrow, shall constitute the joint escrow instructions of Buyer and Seller to Escrow Holder. Additionally, if Escrow Holder so requires, Buyer and Seller agree to execute the form of escrow instructions that Escrow Holder customarily requires in real property escrows administered by it. In the event of any conflict or inconsistency between Escrow Holder's standard instructions and the provisions of this Agreement, the provisions of this Agreement shall supersede and be controlling.

5. INSPECTION AND REVIEW.

5.1 Title Matters. Buyer shall obtain a preliminary title report prepared by Fidelity National Title Company ("Title Company") describing the state of title of the Property together with copies of all underlying documents (collectively, the "Preliminary Title Report"). Buyer may, at its sole cost and expense, obtain a current survey of the Property (the "Survey"). Buyer shall notify Seller in writing of any objections Buyer may have to title exceptions contained in the Preliminary Title Report or matters shown on the Survey (if Buyer has obtained) no later than the date which is fifteen (15) days of its receipt of the Preliminary Title Report ("Buyer's Objection Notice"). Buyer's approval or disapproval of the matters set forth in the Preliminary Title Report (and the Survey, if applicable) may be granted or withheld in Buyer's sole and absolute discretion. Buyer's failure to provide Seller with a Buyer's Objection Notice within said period shall constitute Buyer's approval of all exceptions to title shown on the Preliminary Title Report. If Buyer disapproves or conditionally approves any of the foregoing matters, Seller may, within five (5) days after its receipt of Buyer's Objection Notice, elect to eliminate to Buyer's sole satisfaction such disapproved or conditionally approved matters. Within such five (5) day period, Seller shall give Buyer written notice (which shall hereinafter be referred to as "Seller's Title Notice") of those disapproved or conditionally approved matters, if any, which Seller covenants and agrees to either eliminate from the Preliminary Title Report as exceptions to title to the Property to Buyer's satisfaction by the Closing Date as a condition to the Closing for Buyer's benefit. If Seller does not elect in Seller's Title Notice to eliminate any disapproved or conditionally approved matters as provided above, or if Buyer disapproves, in Buyer's discretion, Seller's Title Notice, then Buyer shall have the right, by a writing delivered to Seller and Escrow Holder prior to a period five (5) days after the earlier to occur of receipt of Seller's Title Notice or expiration of the five day period in which to deliver written notice to: (A) waive its prior disapproval, in which event said disapproved matter(s) shall be deemed approved, or (B) terminate this Agreement and the Escrow created pursuant hereto. Otherwise, the Buyer shall take title at the Close of Escrow subject to such objectionable items without any adjustment to or credit against the Purchase Price. All exceptions to title shown on the Preliminary Title Report, other than those which Seller may agree to remove pursuant to this Section 5.1, shall be deemed to have been approved by Buyer unless Seller is notified otherwise in writing.

Upon the issuance of any amendment or supplement to the Preliminary Title Report which adds additional exceptions, including any survey exceptions, the foregoing right of review

and approval shall also apply to said amendment or supplement. The process set forth above for Buyer's review and Seller's response shall apply to any review and response with respect to any amendment or supplement to the Preliminary Title Report, and the Closing shall be extended for such period as is necessary to allow for that review and response process to be completed.

5.2 Seller to Provide Environmental Studies and Information. Immediately upon the Opening of Escrow, Seller shall provide without charge to Buyer full, complete, and accurate copies of such environmental studies, laboratory results or analyses, surveys or drilling logs, Phase 1 or Phase 2 analyses, monitoring well reports, or any other type of report, summary, data, or information as are in Seller's possession or control regarding any soil or groundwater condition, or other environmental condition on the Property, or any property of which the Property is a part. Buyer shall have full access to such information to assist its conduct of Due Diligence investigations regarding the Property. Such reports are identified in Exhibit "D." Buyer hereby acknowledges that Seller has not made any, and will make no, representations or warranties with respect to the reports. Buyer agrees that any reliance, by Buyer, on the reports, including reliance in making the decision to proceed to Closing, is at Buyer's sole risk. Buyer, its agents and assigns, shall keep confidential and shall not copy, disclose or reproduce, in whole or in part, the reports provided by the Seller as shown in Exhibit "D." The foregoing obligation of confidentiality shall expire at Closing, in the event that the transaction contemplated by this Agreement proceeds to Closing.

5.3 Continuing Due Diligence. For a period of thirty (30) days (the "Due Diligence Period") commencing upon the Opening of Escrow, Buyer shall have the right to examine, inspect and investigate the Property and, at Buyer's sole and absolute discretion, to determine whether the physical and environmental condition of the Property is acceptable to Buyer. This right shall supersede any prior agreement or arrangement that might be made between Buyer and Seller regarding access to the Property to perform environmental studies or analyses. Seller shall permit Buyer, its engineers, analysts, contractors, lenders and agents to conduct physical inspections of the Property, including soil, subsurface soils, drainage, seismic and other geological and topographical matters, location of toxic substances, hazardous materials or wastes, if any, and any other investigations as Buyer deems prudent with respect to the physical condition of the Property. Such investigations may be made by Buyer and/or its agents during any normal business hours. Any invasive testing and investigations of the Property shall be conducted only upon no less than twenty-four (24) hours' notice to Seller. Seller shall have the right, but not the obligation, to accompany Buyer during such investigations and/or inspections but shall not interfere therewith. Buyer shall repair any and all damage to the Property caused by such inspections or investigations in a timely manner and shall indemnify and defend the Seller from and against any liability arising from Buyer's physical inspection hereunder. Buyer shall notify Seller and Escrow Holder in writing ("Buyer's Due Diligence Notice") on or before the expiration of the Due Diligence Period of Buyer's approval or disapproval of the condition of the Property, and Buyer's investigations with respect thereto. Buyer's failure to deliver Buyer's Due Diligence Notice on or before the expiration of the Due Diligence Period shall be conclusively deemed Buyer's approval thereof.

6. CLOSE OF ESCROW.

6.1 Close of Escrow; Closing Date. Provided that all of the conditions of this Agreement precedent to the "Close of Escrow" (as hereinafter defined) as set forth in Section 10 below have been satisfied (or waived by the appropriate party) prior to or on the Closing Date, the Closing of this transaction for the sale and purchase of the Property shall take place on or before May 31, 2009, provided that, upon written notice from Buyer to Escrow Holder delivered on or before May 30, 2009, the Closing of this transaction shall be extended to the date that is forty five (45) days after the Opening of Escrow ("Closing Date"). Notwithstanding the foregoing, if Buyer and Seller agree to advance the Closing, and so long as all of "Buyer's Conditions to Closing" and all of "Seller's Conditions to Closing" (as those terms are defined in Section 10) have been satisfied (or waived by the appropriate party), Seller and Buyer may elect to authorize the Closing before the Closing Date. The terms "Close of Escrow", "Closing Date" and the "Closing" are used herein to mean the time Seller's grant deed conveying fee title to the Property to Buyer is recorded in the Official Records of the Office of the County Recorder of Los Angeles ("Official Records"). If Escrow is not in a condition to close by the Closing Date, either party not then in default hereunder may, upon five (5) days advance written notice to the other party and Escrow Holder, elect to terminate this Agreement and the Escrow. No such termination shall release either party then in default from liability for such default. If neither party so elects to terminate this Agreement and the Escrow, Escrow Holder shall close the Escrow as soon as possible.

6.2 Recordation; Release of Funds and Documents.

6.2.1 Escrow Holder is directed, on the Closing Date, to record in the Official Records, the documents listed in subsections (a) through (e) of Section 7.2 below; and such other and further documents as may be directed jointly by Buyer and Seller.

6.2.2 Upon the Closing, Escrow Holder shall deliver (i) the Purchase Price, less the Deposit and any amount to pay property taxes and/or assessments allocable to Seller pursuant to Section 9, and (ii) conformed copies of all recorded documents to both Buyer and Seller.

7. DELIVERY OF DOCUMENTS REQUIRED FROM BUYER AND SELLER.

7.1 Buyer's Obligations. Buyer agrees that on or before 1:00 p.m. of the last business day immediately preceding the Closing Date, Buyer shall deposit or cause to be deposited with Escrow Holder the following:

(a) the Purchase Price; less the Initial Deposit and Second deposit amounts that have then already been deposited with Escrow Holder; and

(b) any and all additional funds, instruments or other documents required from Buyer (executed and acknowledged where appropriate) as may be reasonably necessary in order for the Escrow Holder to comply with the terms of this Agreement.

7.2 Seller's Obligations. Seller agrees that on or before 1:00 p.m. of the last business day immediately preceding the Closing Date, Seller shall deposit or cause to be deposited with Escrow Holder each of the following:

(a) the executed and acknowledged Grant of Roadway Easements for permanent roadway easements in the form of Exhibit "C" and Exhibit "C-1" attached hereto and made a part hereof;

(b) the executed and acknowledged Grant of Utility Easement for utility easement in the form of Exhibit "C-2" attached hereto and made a part hereof;

(c) the executed and acknowledged Grant of Temporary Construction Easement in the form of Exhibit "C-3" attached hereto and made a part hereof;

(d) the executed and acknowledged Grant of Temporary Easement for On-Site Improvements in the form of Exhibit "C-4" attached hereto and made a part hereof;

(e) the executed and acknowledged Grant of Easement Deed in favor of Southern California Edison for electrical utility relocation easement in the form of Exhibit "C-5" attached hereto and made a part hereof; and

(f) all other funds, items, and instruments required from Seller (executed and acknowledged where appropriate) as may be reasonably necessary in order for Escrow Holder to comply with the provisions of this Agreement.

8. TITLE INSURANCE POLICY.

8.1 Title Policy. At the Closing Date, the Title Company, as insurer, shall issue a CLTA owner's standard coverage policy of title insurance ("Title Policy"), in favor of Buyer, as insured, with liability in the amount of the Purchase Price, subject to the following (the "Permitted Exceptions"):

(a) non-delinquent real property taxes, subject to Seller's obligations to pay certain taxes pursuant to Section 9 below;

(b) covenants, conditions, restrictions and reservations of record that do not interfere with the Buyer's proposed use of the Property, as determined in the sole and absolute discretion of Buyer;

(c) title exceptions approved or deemed approved by Buyer pursuant to Section 4.2 above;

(d) any other exceptions approved by Buyer; and

(e) the standard printed conditions and exceptions contained in the CLTA standard owner's policy of title insurance regularly issued by the Title Company.

8.2 Payment for Title Policy. Buyer shall be responsible for the charges for the Title Policy with coverage up to the amount of the Purchase Price. Buyer shall pay any additional coverage or endorsements it requests. Buyer may, at its election and expense, request an ALTA extended policy of title insurance. Buyer shall also pay for the Survey, if applicable.

9. REAL PROPERTY TAXES AND ASSESSMENTS. Seller shall be responsible for paying all real and personal property taxes and assessments which are of record as of the Closing Date and/or have accrued against the Property only prior to (and including) the Closing Date (notwithstanding whether such taxes and/or assessments are due and payable as of the Closing Date). Seller shall be responsible for paying for the pro-rata portion of all real or personal property taxes or assessments assessed against the Property after the Closing, only insofar as same relate to any period prior to the Closing.

10. CONDITIONS PRECEDENT TO CLOSING.

10.1 Conditions Precedent to Buyer's Obligations. The obligations of Buyer under this Agreement to purchase the Property and close the Escrow shall be subject to the satisfaction or signed written waiver by Buyer of each and all of the following conditions precedent (collectively, "Buyer's Conditions to Closing"):

(a) on the Closing Date, the Title Company shall be irrevocably committed to issue the Title Policy pursuant to Section 8 above insuring fee title to the Property as being vested in Buyer, subject only to the Permitted Exceptions;

(b) Escrow Holder holds all instruments and funds required for the Closing and will deliver to Buyer the instruments and funds, if any, accruing to Buyer pursuant to this Agreement;

(c) except as otherwise permitted by this Agreement, all representations and warranties by the Seller in this Agreement shall be true on and as of the Closing Date as though made at that time and all covenants of Seller pursuant to this Agreement shall have been fulfilled by the Closing Date;

(d) Seller is not in material default of any term or condition of this Agreement;

(e) as of the Closing Date, no judicial or administrative challenges have been presented or filed against the City's actions in proceeding with the extension of Del Amo Boulevard; and

(f) Buyer possesses a continuous and uninterrupted right of entry with respect to the Property pursuant to Section 3 and the right of entry has not been suspended or terminated as of the Closing Date.

In the event that any of Buyer's Conditions to Closing are not satisfied, deemed satisfied, or waived in a writing signed by Buyer prior to the expiration of the applicable period for satisfaction or waiver, Buyer may terminate this Agreement.

10.2 Conditions Precedent to Seller's Obligations. The obligations of Seller under this Agreement shall be subject to the satisfaction or signed written waiver by Seller of each and all of the following conditions precedent ("Seller's Conditions to Closing"):

(a) Escrow Holder holds the Purchase Price and all other instruments and funds required for the Closing and will deliver to Seller the instruments and funds, including but not limited to the Purchase Price (less Seller's closing costs) accruing to Seller pursuant to this Agreement;

(b) except as otherwise permitted by this Agreement, all representations and warranties by the Buyer in this Agreement shall be true on and as of the Closing Date as though made at that time and all covenants of Buyer pursuant to this Agreement shall have been fulfilled by the Closing Date; and

(c) Buyer is not in material default of any term or condition of this Agreement.

In the event that any of Seller's Conditions to Closing are not satisfied, deemed satisfied, or waived in a writing signed by Seller prior to the expiration of the applicable period for satisfaction or waiver, Seller may terminate this Agreement.

10.3 Termination of Agreement. In the event any condition to the obligation of Buyer or Seller to purchase the Property has not been satisfied on or before the dates specified therein or, if no date has been specified, on or before the Closing Date, Buyer (if such condition is for the benefit of Buyer) or Seller (if such condition is for the benefit of Seller) shall have the right to terminate this Agreement and the Escrow by delivery of written notice to the other party and to Escrow Holder. In the event such termination occurs because of the default of Buyer, or Buyer's failure to meet Buyer's Obligations under Section 7.1 above, one half of the Second Deposit than remaining in escrow shall be returned to Buyer along with all interest earned thereon while held in Escrow, and the remaining portion of the Second Deposit shall be disbursed to Seller..

11. POSSESSION. Possession of the Property shall be delivered by Seller to Buyer on the Closing Date, subject only to the Permitted Exceptions, and upon the Closing Date, the right of entry granted under Paragraph 3.1 above shall cease.

12. ALLOCATION OF COSTS.

12.1 Buyer's Costs. Buyer shall pay all closing costs associated with this Agreement and the conveyance of the Property from Seller to Buyer, including any and all escrow and title fees, recording fees, documentary transfer tax, the premium for the Title Policy (plus any additional fee for ALTA extended coverage and/or title endorsements requested by Buyer), and Buyer's own attorney's fees in connection with this Agreement and the transactions contemplated hereby.

12.2 Seller's Costs. Seller shall pay Seller's own attorney's fees, if any, in connection with this Agreement and the transactions contemplated hereby and any payments under Section 9 above.

13. CONDEMNATION. In the event that, prior to the Close of Escrow, any governmental entity (other than the City) shall commence any proceedings of or leading to eminent domain or similar type proceedings to take all or any portion of the Property, Buyer or Seller shall promptly meet and confer in good faith to evaluate the effect of such action on the purposes of this Agreement.

14. REPRESENTATIONS AND WARRANTIES

14.1 Title. Seller holds title to an indefeasible estate in the Property. Grantor is the sole owner of the Property and has good, absolute and marketable title to the Property and has full power and authority to own and sell and convey the Property over under and/or through the Property to Buyer and to enter into and perform his/her/its obligations pursuant to this Agreement.

14.2 Delivery. The execution and delivery of this Agreement by Seller, Seller's performance hereunder, and the consummation of this transaction will not constitute a violation of any order or decree or result in the breach of any contract or agreement to which Seller is at present party, or by which Seller is bound.

14.3 Actions. To Seller's knowledge, no litigation and no governmental, administrative or regulatory act or proceeding regarding the environmental, health and safety aspects of the Property is pending, proposed or threatened.

14.4 Hazardous Substances. To the best of Seller's knowledge, the Property has not at any time been used for the purposes of storing, manufacturing, releasing or dumping Hazardous Materials. For purposes of this Agreement, the term "Hazardous Materials" shall mean (1) hazardous wastes, hazardous materials, hazardous substances, hazardous constituents, toxic substances or related materials, whether solids, liquids or gases, including, but not limited to, substances deemed as "hazardous wastes," "hazardous materials," "hazardous substances," "toxic substances," "pollutants," "contaminants," "radioactive materials," or other similar designations in, or otherwise subject to regulation under, the Comprehensive Environmental Response, Compensation and Liability Act of 1980, as amended ("CERCLA"), 42 U.S.C. § 9601 et seq.; the Toxic Substance Control Act ("TSCA"), 15 U.S.C. § 2601 et seq.; the Hazardous Materials Transportation Act, 49 U.S.C. § 1802; the Resource Conservation and Recovery Act ("RCRA"), 42 U.S.C. § 9601, et seq.; the Clean Water Act ("CWA"), 33 U.S.C. § 1251 et seq.; the Safe Drinking Water Act, 42 U.S.C. § 300 et seq.; the Clean Air Act ("CAA"), 42 U.S.C. § 7401 et seq.; the Hazardous Waste Control Law, California Health and Safety Code § 25025 et seq., the Carpenter-Presley-Tanner Hazardous Substance Account Act, California Health and Safety Code, Division 20, Chapter 6.8, the Hazardous Materials Release Response Plans and Inventory Act, California Health and Safety Code, Division 20, Chapter 6.95, The Underground Storage of Hazardous Substances Act, California Health and Safety Code, Division 20, Chapter 6.7, the Porter-Cologne Act, California Water Code § 13050 et seq. and in any permits, licenses, approvals, plans, rules, regulations or ordinances adopted, or other criteria and guidelines

promulgated pursuant to the preceding laws (collectively the "Environmental Laws"); and (ii) any other substances, constituents or wastes subject to any applicable federal, state or local law, regulation, ordinance, including any Environmental Law, now in effect, including, but not limited to, (A) petroleum, (B) refined petroleum products, (C) waste oil, (D) waste aviation or motor vehicle fuel, (E) asbestos, (F) lead in water, paint or elsewhere, (G) radon, (H) polychlorinated biphenyls (PCB's) and (I) ureaformaldehyde.

14.5 Remediation Before Close of Escrow.

A. Remediation and Withholding of Second Deposit. In the event Buyer discovers Hazardous Materials, or contaminated soil and/or water in, on or under the Property, and such discovery is made before the Closing Date, Seller shall, at its expense and to the extent it is a responsible party or otherwise required by an agency of applicable jurisdiction to take any action in connection therewith, diligently undertake and diligently prosecute to completion any and all required measures to characterize, contain, or remediate such condition or conditions, as may be required by of any applicable agency of jurisdiction to issue a "No Further Action" letter, or similar instrument or approval indicating the condition has been remediated to that agency's satisfaction (collectively "Remediation"). If Seller's Remediation extends beyond the date for Closing, and Buyer elects not to terminate this Agreement under Section 5.3 above, the Second Deposit shall be withheld from the disbursement of proceeds of the Purchase Price otherwise payable to Seller at Close of Escrow, and shall be retained in Escrow, as security for Seller's completion of the Remediation. In such event Escrow Holder shall, upon Closing, retain all such portions of the Second Deposit in escrow as may then remain, which funds shall be disbursed only for purposes of accomplishing the Remediation, and only in the amount of, and upon presentation to Escrow Holder of, invoices or documented charges incurred for the Remediation, until the Remediation is complete. At the completion of the Remediation, any and all funds remaining from the Second Deposit shall be disbursed to Seller. Buyer's rights against Seller shall not be limited to the portions of the Second Deposit withheld in escrow, and Buyer reserves all rights and remedies it may have against Seller, or any other party, in connection with Hazardous Materials, or contaminated soil and/or water in, on or under the Property, Any funds so retained by Escrow Holder from the Second Deposit shall be held in an interest bearing account, with interest thereon accruing to the benefit of Seller.

B. Buyer's Remedy. In the event Seller fails to accomplish, or reasonably prosecute to completion, the Remediation, Buyer shall have the right to assume such remaining portion of the Remediation as then remains, and in such event, Escrow Holder shall release disbursements to Buyer from any remaining portions of the amount of the Second Deposit withheld to Buyer for such purposes, in the same manner as provided under paragraph A above. In the event of such assumption by Buyer, Seller shall provide to Buyer, at no cost to Buyer, full, complete, and accurate copies of all environmental studies, laboratory results or analyses, surveys or drilling logs, Phase 1 or Phase 2 analyses, monitoring well reports, or any other type of report, summary, data, or information in Seller's possession or control regarding the Remediation. Buyer may not assume the Remediation unless it has first provided no less than twenty (20) days written notice to Seller, specifying the action or actions Seller has failed or refused to perform in

accomplishing the Remediation, and demanding the specific actions Buyer requires Seller to take to diligently prosecute the Remediation to completion. Upon receipt of such notice, Seller may (1) agree with Buyer's Notice in writing, which agreement shall contain Seller's commitment to perform the actions required by Buyer; (2) reject Buyer's Notice, and turn the Remediation over to Buyer; or (3) dispute the Notice, and provide to Buyer, within twenty (20) days of the receipt of Buyer's Notice, a written response detailing the manner in which Seller is diligently prosecuting the Remediation to completion, and a specific schedule for the remaining items of the Remediation yet to be performed, by whom, and the schedule therefor. In the event of any dispute between Buyer and Seller regarding whether Seller has acted diligently in undertaking and prosecuting the Remediation to completion, the parties shall submit the question to mediation, which shall be conducted by a mediator to be mutually selected by the parties, and which shall be completed on or before ninety (90) days after Seller's written response to Buyer's Notice . The parties shall share equally the costs of the mediator's services in resolving the dispute. Completion of the mediation process shall be a condition to initiation by either party of any litigation arising out of any dispute regarding the subject of Buyer's Notice.

14.6 Remedies. In the event Buyer discovers Hazardous Materials, or contaminated soil and/or water in, on or under the Property, and such discovery is made after the Closing Date, and Seller is determined to be a responsible party therefor, Seller shall indemnify Buyer for costs and expenses incurred by Buyer for the removal and disposal of any such Hazardous Materials, contaminated soil and/or water upon receipt of a bill or invoices therefor. Such indemnity shall extend to Buyer, its officers, employees, consultants and agents, for any and all liability, costs, fines, penalties, charges and/or claims of any kind whatsoever related to the existence and removal of any Hazardous Materials, contaminated soil and/or water. Such indemnity shall survive the Closing of Escrow.

14.7 Reservation of Rights. Notwithstanding anything to the contrary set forth in this Agreement, Buyer reserves all rights and remedies, at law or in equity, with respect to Hazardous Materials, contaminated soil and/or water in, on or under the Property discovered by Buyer following the Close of Escrow. This Section 14 shall survive the Closing Date and shall remain a binding contract between Buyer and Seller.

15. COVENANTS OF SELLER. Seller agrees that during the period between the Effective Date of this Agreement and the Closing Date:

(a) Seller shall maintain the Property in not less than the state of repair as that existing on the Effective Date (excepting ordinary wear and tear);

(b) Seller shall not convey, grant, lease, assign, mortgage, hypothecate, encumber, or otherwise transfer (on or off record) the Property or any interest therein;

(c) Prior to Closing, Seller shall maintain Seller's existing insurance, if any, on the Property; and

(d) Prior to the Closing, Seller shall not alter the physical condition of the Property or introduce or release, or permit the introduction or release, of any Hazardous Materials in, from, under, or on the Property.

16. DISMISSAL OF EMINENT DOMAIN ACTION. Seller hereby acknowledges that Buyer has filed the Condemnation Action regarding the Property, naming the owner of the Property, and others as necessary defendants, and may apply for an Order of Prejudgment Possession. Seller hereby consents to the issuance of an Order of Prejudgment Possession as to its interest in the Property. Seller agrees that the compensation to be paid by this Agreement shall be in lieu of the deposit of the probable compensation pursuant to the Code of Civil Procedure, Section 1255.010. Seller also hereby consents to the dismissal of the Condemnation Action, and waives any claim for costs, attorney's fees, or any other litigation expenses or costs, improvements pertaining to the realty, loss of business goodwill, pre-condemnation damage, and deposits in said action made by Buyer, or any claim whatsoever which might arise out of Buyer's processes leading to acquisition of the Property, including but not limited to any amount of money as payment for the Property in addition to those made hereunder, any objection to Buyer's right to take the Property by eminent domain, and any rights to a lease or buy-back of the Property arising out of Code of Civil Procedure sections 1245.245, 1263.025, or any related provision of law.. In connection with such waivers, Seller specifically waives any benefit from, or application of, Civil Code section 1542, which provides: A GENERAL RELEASE DOES NOT EXTEND TO CLAIMS WHICH THE CREDITOR DOES NOT KNOW OR SUSPECT TO EXIST IN HIS OR HER FAVOR AT THE TIME OF EXECUTING THE RELEASE, WHICH, IF KNOWN BY HIM OR HER, MUST HAVE MATERIALLY AFFECTED HIS OR HER SETTLEMENT WITH THE DEBTOR. Seller represents to Buyer it has had the opportunity to review with counsel the meaning and import of waiving Civil Code section 1542, and knowingly and willingly waives it. Seller further agrees to execute Stipulations, Partial Judgments, and other documents necessary to dismissal of the Condemnation Action.

17. MISCELLANEOUS.

17.1 Assignment. This Agreement shall be binding upon and shall inure to the benefit of Buyer and Seller and their respective heirs, personal representatives, successors and assigns. Neither party to this Agreement may assign this Agreement or any interest or right hereunder or under the Escrow without the prior written consent and approval of the other party, which consent and approval may be withheld in the sole and absolute discretion of either party. No provision of this Agreement is intended nor shall in any way be construed to benefit any party not a signatory hereto or to create a third party beneficiary relationship.

17.2 Notices. All notices under this Agreement shall be effective upon personal delivery, via facsimile so long as the sender receives confirmation of successful transmission from the sending machine, or three (3) business days after deposit in the United States mail, registered, certified, postage fully prepaid and addressed to the respective parties as set forth below or as to such other address as the parties may from time to time designate in writing:

To Seller: The Dow Chemical Company
Attn: Real Estate Director
2030 Dow Center
Midland, MI 48674

Copy to: Oliver, Sandifer & Murphy, LLP
281 S Figueroa Street, 2nd Floor
Los Angeles, CA 90012
Attn: Duff Murphy, Esq.
Facsimile No.: 213-621-2211

To Buyer: City of Torrance
3031 Torrance Boulevard
Torrance, CA 90509-2970
Attn: City Clerk
Facsimile No.: (310) 618-2931

Copy to: Rutan & Tucker, LLP
611 Anton Boulevard, Suite 1400
Costa Mesa, California 92628-1950
Attn: David Cosgrove, Esq.
Facsimile No.: (714) 546-9035

17.3 Fair Meaning. This Agreement shall be construed according to its fair meaning and as if prepared by both parties hereto.

17.4 Headings. The headings at the beginning of each numbered Section of this Agreement are solely for the convenience of the parties hereto and are not a part of this Agreement.

17.5 Choice of Laws; Litigation Matters. This Agreement shall be governed by the internal laws of the State of California and any question arising hereunder shall be construed or determined according to such law. The Municipal and Superior Courts of the State of California in and for the County of Los Angeles, or such other appropriate court in such county, shall have exclusive jurisdiction of any litigation between the parties concerning this Agreement. Service of process on Buyer shall be made in accordance with California law. Service of process on Seller shall be made in any manner permitted by California law and shall be effective whether served inside or outside California.

17.6 No liability of Buyer Officials. No officer, official, member, employee, agent, or representatives of Buyer shall be liable for any amounts due hereunder, and no judgment or execution thereon entered in any action hereon shall be personally enforced against any such officer, official, member, employee, agent, or representative.

17.7 Gender; Number. As used in this Agreement, masculine, feminine, and neuter gender and the singular or plural number shall be deemed to include the others wherever and whenever the context so dictates.

17.8 Survival. This Agreement and all covenants to be performed after the Closing, and, except as otherwise set forth herein, all representations and warranties contained herein, shall survive the Closing Date and shall remain a binding contract between the parties hereto.

17.9 Time of Essence. Time is of the essence of this Agreement and of each and every term and provision hereof, it being understood that the parties hereto have specifically negotiated the dates for the completion of each obligation herein.

17.10 Waiver or Modification. A waiver of a provision hereof, or modification of any provision herein contained, shall be effective only if said waiver or modification is in writing, and signed by both Buyer and Seller. No waiver of any breach or default by any party hereto shall be considered to be a waiver of any breach or default unless expressly provided herein or in the waiver.

17.11 Broker's Fees. Seller and Buyer represent and warrant to the other that neither Buyer nor Seller has employed any broker and/or finder to represent its interest in this transaction. Each party agrees to indemnify and hold the other free and harmless from and against any and all liability, loss, cost, or expense (including court costs and reasonable attorney's fees) in any manner connected with a claim asserted by any individual or entity for any commission or finder's fee in connection with the conveyance of the Property arising out of agreements by the indemnifying party to pay any commission or finder's fee.

17.12 Duplicate Originals. This Agreement may be executed in any number of duplicate originals, all of which shall be of equal legal force and effect.

17.13 Severability. If any term, covenant or condition of this Agreement or the application thereof to any person, entity, or circumstance shall, to any extent, be invalid or unenforceable, the remainder of this Agreement, or the application of such term, covenant, or condition to persons, entities, or circumstances other than those as to which it is held invalid or unenforceable, shall not be affected thereby and each term, covenant or condition of this Agreement shall be valid and enforceable to the fullest extent permitted by law.

17.14 Exhibits. The Exhibits attached to this Agreement are incorporated herein by this reference and made a part hereof.

17.15 Authority. The person(s) executing this Agreement on behalf of each of the parties hereto represent and warrant that (i) such party is duly organized and existing, (ii) they are duly authorized to execute and deliver this Agreement on behalf of said party, (iii) by so executing this Agreement such party is formally bound to the provisions of this Agreement, and (iv) the entering into this Agreement does not violate any provision of any other agreement to which such party is bound.

17.16 Entire Agreement; Amendment. Except as set forth above, this Agreement and the exhibits incorporated herein contain the entire agreement of Buyer and Seller with respect to the matters contained herein, and no prior agreement or understanding pertaining to any such matter shall be effective for any purpose. No provisions of this Agreement may be amended or modified in any manner whatsoever except by an agreement in writing signed by duly authorized officers or representatives of each of the parties hereto.

[END -- SIGNATURE PAGE FOLLOWS]

IN WITNESS WHEREOF, Buyer and Seller each hereby represents that it has read this Agreement, understands it, and hereby executes this Agreement to be effective as of the day and year first written above.

SELLER:

THE DOW CHEMICAL COMPANY,
a Delaware corporation

By: _____
Its: Charles B. Kendall
Authorized Representative

BUYER:

CITY OF TORRANCE, a California municipal corporation

By: _____
Frank Scotto, Mayor

ATTEST:

_____
Sue Herbers, City Clerk

APPROVED AS TO FORM:
JOHN L. FELLOWS III
City Attorney

By: _____
Patrick Q. Sullivan
Deputy City Attorney

Fidelity National Title Company agrees to act as Escrow Holder in accordance with the terms of this Agreement that are applicable to it.

Fidelity National Title Company

By: Natalie Priestley

Name: Natalie Priestley

Its: VP

Parties are aware that no funds will be deposited into an interest bearing account until a completed W-9 is received into escrow. Depositor will bear loss of interest until W-9 is received by Escrow.

Natalie Priestley

Escrow Officer

Exhibit "A"

LEGAL DESCRIPTION OF THE EASEMENT

(attached)

EXHIBIT "A"

Portion of APN. 7352-002-017

PARCEL 5-P.E.
PERMANENT STREET EASEMENT

THAT PORTION OF LOT 8, OF TRACT 7873, IN THE CITY OF TORRANCE, COUNTY OF LOS ANGELES, STATE OF CALIFORNIA, AS PER RECORDED IN BOOK 109, PAGES 99 AND 100 OF MAPS, IN THE OFFICE OF THE COUNTY RECORDER OF SAID COUNTY BOUNDED AND DESCRIBED AS FOLLOWS:

COMMENCING AT THE INTERSECTION OF THE NORTHERLY LINE OF SAID LOT 8 WITH THE NORTHEASTERLY BOUNDARY OF THAT CERTAIN 15.00 FOOT WIDE PARCEL OF LAND DEEDED BY CHANSLOR-CANFIELD MIDWAY OIL COMPANY TO THE ATCHISON, TOPEKA AND SANTA FE RAIL COMPANY FOR RIGHT OF WAY PURPOSES BY DEED DATED AUGUST 2, 1948 AND RECORDED IN BOOK 28452, PAGE 315 OF OFFICIAL RECORDS OF SAID COUNTY; THENCE ALONG THE NORTHERLY LINE OF LOT 8 SOUTH 89°59'51" EAST, 66.57 FEET TO THE TRUE POINT OF BEGINNING; THENCE; CONTINUING ALONG SAID NORTHERLY LINE SOUTH 89°59'51" EAST, 1,715.79 FEET; THENCE SOUTH 00°34'10" EAST, 71.59 FEET; THENCE NORTH 89°59'51" WEST, 1,348.15 FEET; THENCE NORTH 79°00'00" WEST, 375.24 FEET TO THE TRUE POINT OF BEGINNING.

CONTAINING 109,670 SQUARE FEET OR 2.51 ACRES MORE OR LESS.

SEE EXHIBIT "B" MAP ATTACHED HERETO AND BY REFERENCE MADE A PART HEREOF.

Exhibit "B"

MAP WITH DEPICTION OF THE EASEMENT

(attached)

Exhibit "B"

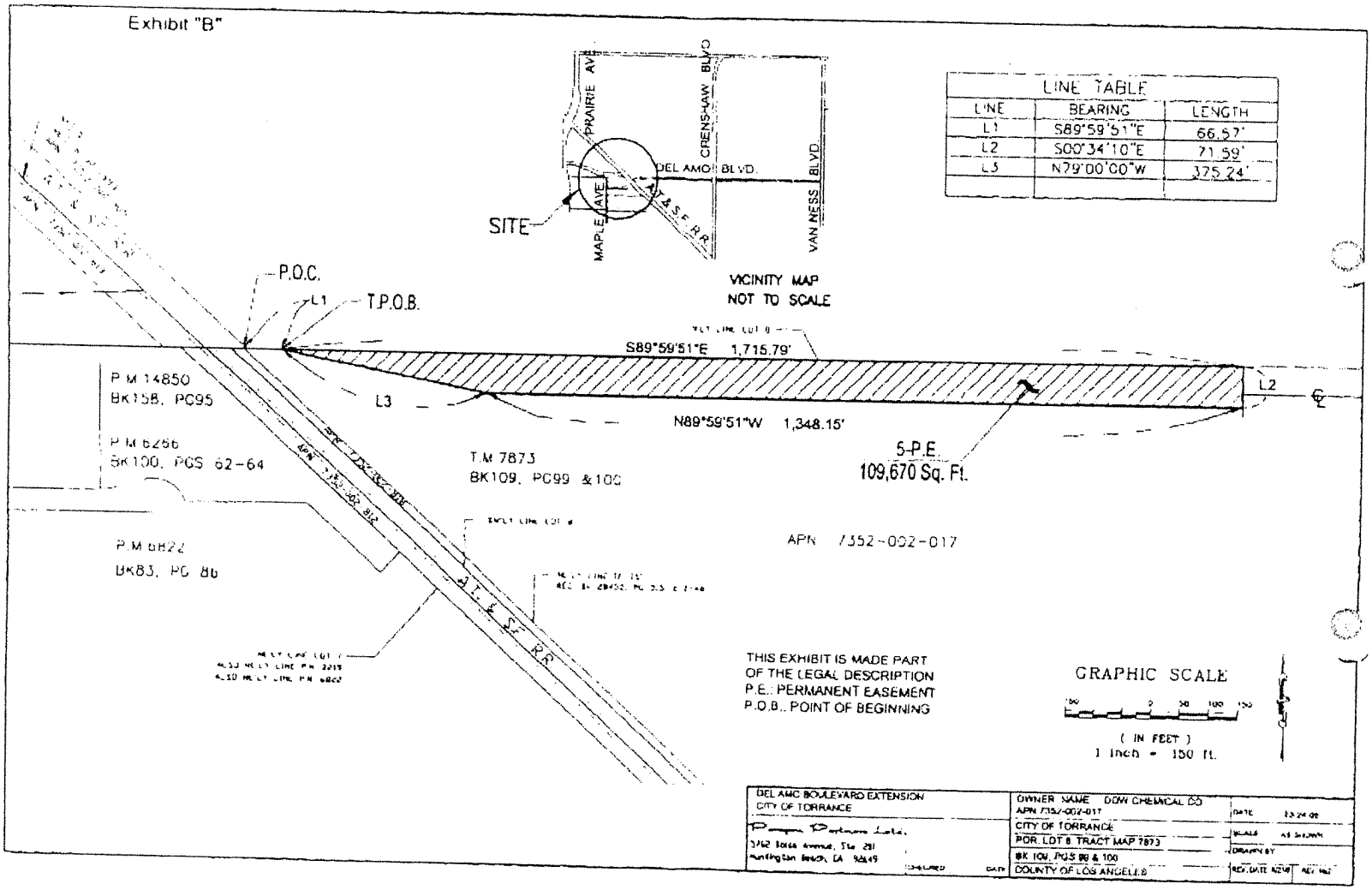

LINE TABLE		
LINE	BEARING	LENGTH
L1	S89°59'51"E	66.57'
L2	S00°34'10"E	71.59'
L3	N79°00'00"W	375.24'

2202/062579-0086
1005498 11 a05/29/09

EXHIBIT "C"

GRANT OF PERMANENT ROADWAY EASEMENT (1)

[see attached]

RECORDING REQUESTED BY
AND WHEN RECORDED MAIL TO:

City of Torrance
3031 Torrance Boulevard
Torrance, CA 90503
Attention: City Clerk

Exempt from Recording Fee
Pursuant to Government Code Section 6103

Exempt from Documentary Transfer Tax
Pursuant to R&T Code § 11922

APN: 7352-002-017
FULL [ ] PORTION [X]

(Space above this line for Recorder's use)

GRANT OF ROADWAY EASEMENT (1)

For valuable consideration, receipt of which is hereby acknowledged, THE DOW CHEMICAL COMPANY, a Delaware corporation ("Grantor"), hereby grants to the CITY OF TORRANCE, a municipal corporation ("Grantee") a permanent roadway easement (the "Easement") in, on, over, along, through, upon, under and across that certain real property (the "Easement Area"), described on Exhibit "A" and depicted on Exhibit "B" attached hereto and incorporated herein by this reference, for the following purposes:

A perpetual exclusive easement for public right of way and roadway purposes, including all use of the Easement Area for purposes incident to public right of way use, including but not limited to the construction, maintenance, and operation of a roadway, underground and above ground utilities and appurtenances, cable communication or telecommunication facilities, directional, street identification, or roadway informational signage, traffic control devices, curbs, gutters, sidewalks, landscaping, drainage and sewage facilities, and transportation facilities such as bus bays, benches, bus or train stops, bicycle pathways, or facilities for railway or other public transportation vehicles or manners of conveyance.

The rights and obligations of the parties hereunder shall constitute covenants, benefits and burdens which run with the land and which shall be binding upon, and inure to the benefit of, the successors and assigns of each party hereto.

[Signatures on next page]

IN WITNESS WHEREOF, the Grantor and Grantee hereto has caused this Easement Deed to be executed as of this _____day of _____, 2009.

GRANTOR:

THE DOW CHEMICAL COMPANY,
a Delaware corporation

_____

By: _____
Its: _____

GRANTEE:

CITY OF TORRANCE, a California municipal corporation

By: _____
Frank Scotto, Mayor

ATTEST:

_____
Sue Herbers, City Clerk

APPROVED AS TO FORM:
JOHN L. FELLOWS III
City Attorney

By: _____ _____
Patrick Q. Sullivan
Deputy City Attorney

STATE OF CALIFORNIA)
) ss.
COUNTY OF)

On _____, before me, _____, Notary Public, personally appeared _____, who proved to me on the basis of satisfactory evidence to be the person(s) whose name(s) is/are subscribed to the within instrument, and acknowledged to me that he/she/they executed the same in his/her/their authorized capacity(ies), and that by his/her/their signature(s) on the instrument the person(s), or the entity upon behalf of which the person(s) acted, executed the instrument.

I certify under PENALTY OF PERJURY under the laws of the State of California that the foregoing paragraph is true and correct.

WITNESS my hand and official seal.

Signature_____

[SEAL]

STATE OF CALIFORNIA)
) ss.
COUNTY OF)

On _____, before me, _____, Notary Public, personally appeared _____, who proved to me on the basis of satisfactory evidence to be the person(s) whose name(s) is/are subscribed to the within instrument, and acknowledged to me that he/she/they executed the same in his/her/their authorized capacity(ies), and that by his/her/their signature(s) on the instrument the person(s), or the entity upon behalf of which the person(s) acted, executed the instrument.

I certify under PENALTY OF PERJURY under the laws of the State of California that the foregoing paragraph is true and correct.

WITNESS my hand and official seal.

Signature_____

[SEAL]

STATE OF CALIFORNIA)
) ss.
COUNTY OF)

On _____, before me, _____, Notary Public, personally appeared _____, who proved to me on the basis of satisfactory evidence to be the person(s) whose name(s) is/are subscribed to the within instrument, and acknowledged to me that he/she/they executed the same in his/her/their authorized capacity(ies), and that by his/her/their signature(s) on the instrument the person(s), or the entity upon behalf of which the person(s) acted, executed the instrument.

I certify under PENALTY OF PERJURY under the laws of the State of California that the foregoing paragraph is true and correct.

WITNESS my hand and official seal.

Signature_____

[SEAL]

STATE OF CALIFORNIA)
) ss.
COUNTY OF)

On _____, before me, _____, Notary Public, personally appeared _____, who proved to me on the basis of satisfactory evidence to be the person(s) whose name(s) is/are subscribed to the within instrument, and acknowledged to me that he/she/they executed the same in his/her/their authorized capacity(ies), and that by his/her/their signature(s) on the instrument the person(s), or the entity upon behalf of which the person(s) acted, executed the instrument.

I certify under PENALTY OF PERJURY under the laws of the State of California that the foregoing paragraph is true and correct.

WITNESS my hand and official seal.

Signature_____

[SEAL]

EXHIBIT "A"

DESCRIPTION OF
PERMANENT ROADWAY EASEMENT (1)

[see attached]

EXHIBIT "A"

Portion of APN. 7352-002-017

PARCEL 5-P.E.
PERMANENT STREET EASEMENT

THAT PORTION OF LOT 8, OF TRACT 7873, IN THE CITY OF TORRANCE, COUNTY OF LOS ANGELES, STATE OF CALIFORNIA, AS PER RECORDED IN BOOK 109, PAGES 99 AND 100 OF MAPS, IN THE OFFICE OF THE COUNTY RECORDER OF SAID COUNTY BOUNDED AND DESCRIBED AS FOLLOWS:

COMMENCING AT THE INTERSECTION OF THE NORTHERLY LINE OF SAID LOT 8 WITH THE NORTHEASTERLY BOUNDARY OF THAT CERTAIN 15.00 FOOT WIDE PARCEL OF LAND DEEDED BY CHANSLOR-CANFIELD MIDWAY OIL COMPANY TO THE ATCHISON, TOPEKA AND SANTA FE RAIL COMPANY FOR RIGHT OF WAY PURPOSES BY DEED DATED AUGUST 2, 1948 AND RECORDED IN BOOK 28452, PAGE 315 OF OFFICIAL RECORDS OF SAID COUNTY; THENCE ALONG THE NORTHERLY LINE OF LOT 8 SOUTH 89°59'51" EAST, 66.57 FEET TO THE TRUE POINT OF BEGINNING; THENCE; CONTINUING ALONG SAID NORTHERLY LINE SOUTH 89°59'51" EAST, 1,715.79 FEET; THENCE SOUTH 00°34'10" EAST, 71.59 FEET; THENCE NORTH 89°59'51" WEST, 1,348.15 FEET; THENCE NORTH 79°00'00" WEST, 375.24 FEET TO THE TRUE POINT OF BEGINNING.

CONTAINING 109,670 SQUARE FEET OR 2.51 ACRES MORE OR LESS.

SEE EXHIBIT "B" MAP ATTACHED HERETO AND BY REFERENCE MADE A PART HEREOF.

EXHIBIT "B"

DEPICTION OF PERMANENT ROADWAY EASEMENT (1)

[see attached]

Exhibit "B"

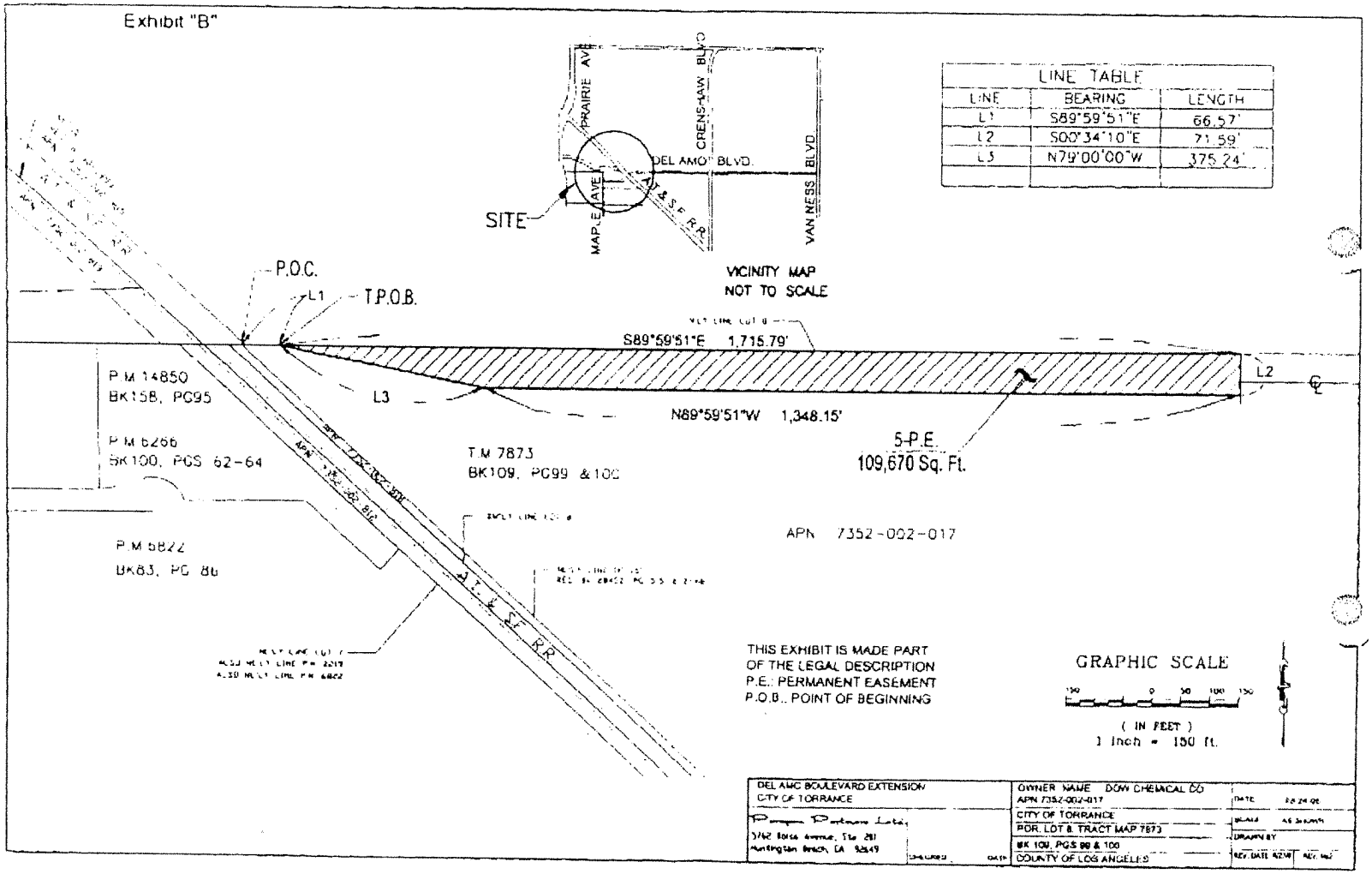

LINE TABLE		
LINE	BEARING	LENGTH
L1	S89°59'51"E	66.57'
L2	S00°34'10"E	71.59'
L3	N79°00'00"W	375.24'

2202/062579-0086
1005498.11 a05/29/09

EXHIBIT "A-1"

DESCRIPTION OF
PERMANENT ROADWAY EASEMENT (2)

[see attached]

EXHIBIT "A-1"

Portion of APN. 7352-002-017

PARCEL 5A-P.E.
PERMANENT STREET EASEMENT

THAT PORTION OF LOT 8, OF TRACT 7873, IN THE CITY OF TORRANCE, COUNTY OF LOS ANGELES, STATE OF CALIFORNIA, AS PER RECORDED IN BOOK 109, PAGES 99 AND 100 OF MAPS, IN THE OFFICE OF THE COUNTY RECORDER OF SAID COUNTY BOUNDED AND DESCRIBED AS FOLLOWS:

BEGINNING AT THE INTERSECTION OF THE NORTHERLY LINE OF SAID LOT 8 WITH THE NORTHEASTERLY BOUNDARY OF THAT CERTAIN 15.00 FOOT WIDE PARCEL OF LAND DEEDED BY CHANSLOR-CANFIELD MIDWAY OIL COMPANY TO THE ATCHISON, TOPEKA AND SANTA FE RAIL COMPANY FOR RIGHT OF WAY PURPOSES BY DEED DATED AUGUST 2, 1948 AND RECORDED IN BOOK 28452, PAGE 315 OF OFFICIAL RECORDS OF SAID COUNTY; THENCE ALONG THE NORTHERLY LINE OF LOT 8 SOUTH 89°59'51" EAST, 7.47 FEET; THENCE SOUTH 21°30'09" WEST, 5.34 FEET; THENCE NORTH 48°00'00" WEST, 7.42 FEET TO THE POINT OF BEGINNING.

CONTAINING 19.0 SQUARE FEET OR 0.0004 ACRES MORE OR LESS.

SEE EXHIBIT "B-1" MAP ATTACHED HERETO AND BY REFERENCE MADE A PART HEREOF.

EXHIBIT "B-1"

DEPICTION OF
PERMANENT ROADWAY EASEMENT (2)

[see attached]

EXHIBIT "B-1"

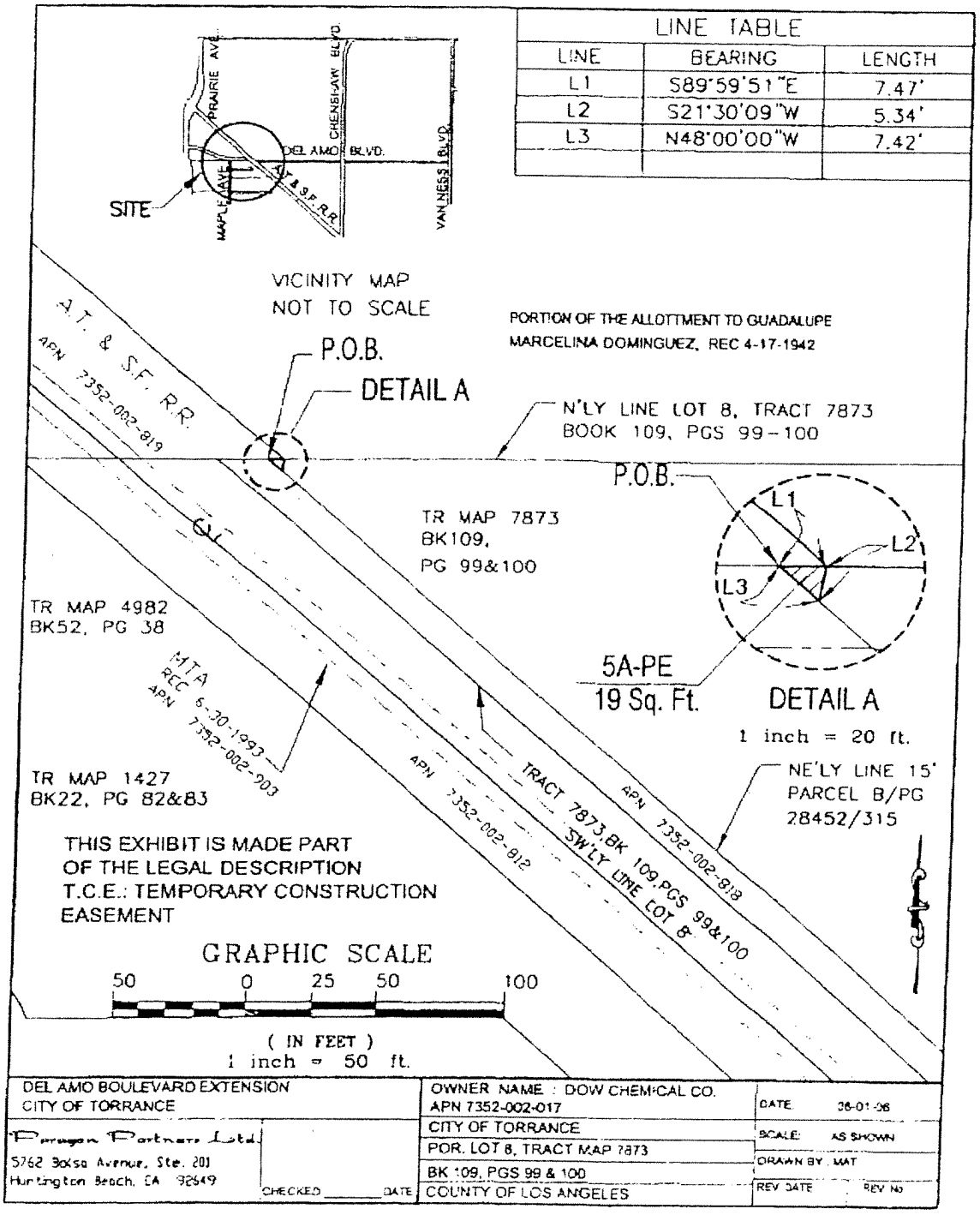

2202/062579-0086
1005498 11 a05/29/09

EXHIBIT "C-1"

GRANT OF PERMANENT ROADWAY EASEMENT (2)

RECORDING REQUESTED BY
AND WHEN RECORDED MAIL TO:

City of Torrance
3031 Torrance Boulevard
Torrance, CA 90503
Attention: City Clerk

Exempt from Recording Fee
Pursuant to Government Code Section 6103

Exempt from Documentary Transfer Tax
Pursuant to R&T Code § 11922

APN: 7352-002-017
FULL [ ] PORTION [X]

(Space above this line for Recorder's use)

GRANT OF ROADWAY EASEMENT (2)

For valuable consideration, receipt of which is hereby acknowledged, THE DOW CHEMICAL COMPANY, a Delaware corporation ("Grantor"), hereby grants to the CITY OF TORRANCE, a municipal corporation ("Grantee") a permanent roadway easement (the "Easement") in, on, over, along, through, upon, under and across that certain real property (the "Easement Area"), described on Exhibit "A-1" and depicted on Exhibit "B-1" attached hereto and incorporated herein by this reference, for the following purposes:

A perpetual exclusive easement for public right of way and roadway purposes, including all use of the Easement Area for purposes incident to public right of way use, including but not limited to the construction, maintenance, and operation of a roadway, underground and above ground utilities and appurtenances, cable communication or telecommunication facilities, directional, street identification, or roadway informational signage, traffic control devices, curbs, gutters, sidewalks, landscaping, drainage and sewage facilities, and transportation facilities such as bus bays, benches, bus or train stops, bicycle pathways, or facilities for railway or other public transportation vehicles or manners of conveyance.

The rights and obligations of the parties hereunder shall constitute covenants, benefits and burdens which run with the land and which shall be binding upon, and inure to the benefit of, the successors and assigns of each party hereto.

[Signatures on next page]

IN WITNESS WHEREOF, the Grantor and Grantee hereto has caused this Easement Deed to be executed as of this _____day of _____, 2009.

GRANTOR:

THE DOW CHEMICAL COMPANY,
a Delaware corporation

_____

By: _____
Its: _____

GRANTEE:

CITY OF TORRANCE, a California municipal corporation

By: _____
Frank Scotto, Mayor

ATTEST:

_____
Sue Herbers, City Clerk

APPROVED AS TO FORM:
JOHN L. FELLOWS III
City Attorney

By: _____
Patrick Q. Sullivan
Deputy City Attorney

STATE OF CALIFORNIA)
) ss.
COUNTY OF)

On _____, before me, _____, Notary Public, personally appeared _____, who proved to me on the basis of satisfactory evidence to be the person(s) whose name(s) is/are subscribed to the within instrument, and acknowledged to me that he/she/they executed the same in his/her/their authorized capacity(ies), and that by his/her/their signature(s) on the instrument the person(s), or the entity upon behalf of which the person(s) acted, executed the instrument.

I certify under PENALTY OF PERJURY under the laws of the State of California that the foregoing paragraph is true and correct.

WITNESS my hand and official seal.

Signature_____

[SEAL]

STATE OF CALIFORNIA)
) ss.
COUNTY OF)

On _____, before me, _____, Notary Public, personally appeared _____, who proved to me on the basis of satisfactory evidence to be the person(s) whose name(s) is/are subscribed to the within instrument, and acknowledged to me that he/she/they executed the same in his/her/their authorized capacity(ies), and that by his/her/their signature(s) on the instrument the person(s), or the entity upon behalf of which the person(s) acted, executed the instrument.

I certify under PENALTY OF PERJURY under the laws of the State of California that the foregoing paragraph is true and correct.

WITNESS my hand and official seal.

Signature_____

[SEAL]

STATE OF CALIFORNIA)
) ss.
COUNTY OF)

On _____, before me, _____, Notary Public, personally appeared _____, who proved to me on the basis of satisfactory evidence to be the person(s) whose name(s) is/are subscribed to the within instrument, and acknowledged to me that he/she/they executed the same in his/her/their authorized capacity(ies), and that by his/her/their signature(s) on the instrument the person(s), or the entity upon behalf of which the person(s) acted, executed the instrument.

I certify under PENALTY OF PERJURY under the laws of the State of California that the foregoing paragraph is true and correct.

WITNESS my hand and official seal.

Signature_____

[SEAL]

STATE OF CALIFORNIA)
) ss.
COUNTY OF)

On _____, before me, _____, Notary Public, personally appeared _____, who proved to me on the basis of satisfactory evidence to be the person(s) whose name(s) is/are subscribed to the within instrument, and acknowledged to me that he/she/they executed the same in his/her/their authorized capacity(ies), and that by his/her/their signature(s) on the instrument the person(s), or the entity upon behalf of which the person(s) acted, executed the instrument.

I certify under PENALTY OF PERJURY under the laws of the State of California that the foregoing paragraph is true and correct.

WITNESS my hand and official seal.

Signature_____

[SEAL]

Exhibit "A-1"

LEGAL DESCRIPTION OF THE EASEMENT

(attached)

EXHIBIT "A-1"

Portion of APN. 7352-002-017

PARCEL 5A-P.E.
PERMANENT STREET EASEMENT

THAT PORTION OF LOT 8, OF TRACT 7873, IN THE CITY OF TORRANCE, COUNTY OF LOS ANGELES, STATE OF CALIFORNIA, AS PER RECORDED IN BOOK 109, PAGES 99 AND 100 OF MAPS, IN THE OFFICE OF THE COUNTY RECORDER OF SAID COUNTY BOUNDED AND DESCRIBED AS FOLLOWS:

BEGINNING AT THE INTERSECTION OF THE NORTHERLY LINE OF SAID LOT 8 WITH THE NORTHEASTERLY BOUNDARY OF THAT CERTAIN 15.00 FOOT WIDE PARCEL OF LAND DEEDED BY CHANSLOR-CANFIELD MIDWAY OIL COMPANY TO THE ATCHISON, TOPEKA AND SANTA FE RAIL COMPANY FOR RIGHT OF WAY PURPOSES BY DEED DATED AUGUST 2, 1948 AND RECORDED IN BOOK 28452, PAGE 315 OF OFFICIAL RECORDS OF SAID COUNTY; THENCE ALONG THE NORTHERLY LINE OF LOT 8 SOUTH 89°59'51" EAST, 7.47 FEET; THENCE SOUTH 21°30'09" WEST, 5.34 FEET; THENCE NORTH 48°00'00" WEST, 7.42 FEET TO THE POINT OF BEGINNING.

CONTAINING 19.0 SQUARE FEET OR 0.0004 ACRES MORE OR LESS.

SEE EXHIBIT "B-1" MAP ATTACHED HERETO AND BY REFERENCE MADE A PART HEREOF.

Exhibit "B-1"

MAP WITH DEPICTION OF THE EASEMENT

(attached)

EXHIBIT "B-1"

LINE TABLE		
LINE	BEARING	LENGTH
L1	S89°59'51"E	7.47'
L2	S21°30'09"W	5.34'
L3	N48°00'00"W	7.42'

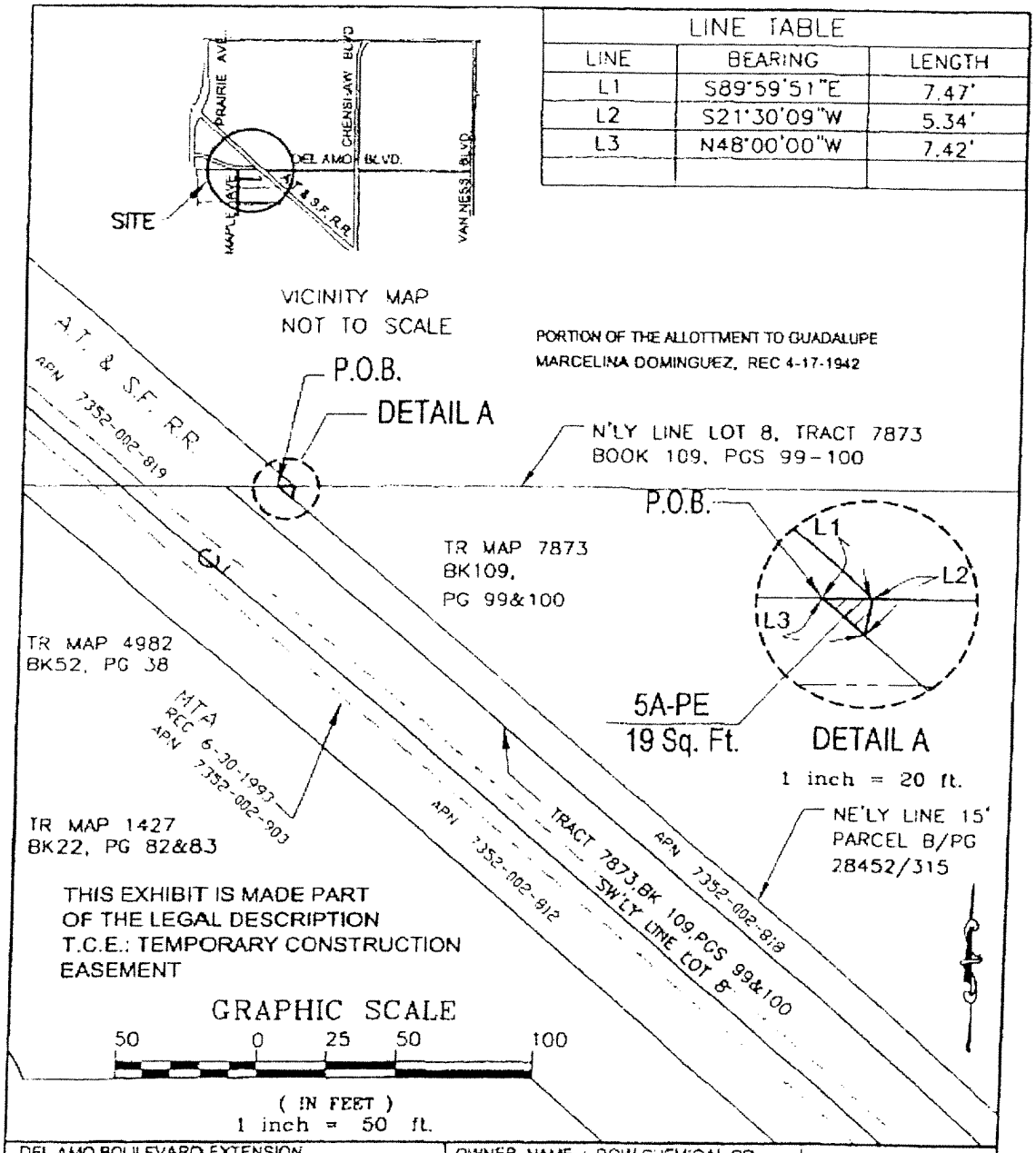

DEL AMO BOULEVARD EXTENSION CITY OF TORRANCE	OWNER NAME : DOW CHEMICAL CO. APN 7352-002-017	DATE 06-01-06
Paragon Partners Ltd. 5762 Bolsa Avenue, Ste. 201 Huntington Beach, CA 92649	CITY OF TORRANCE	SCALE: AS SHOWN
	POR. LOT 8, TRACT MAP 7873	DRAWN BY : MAT
	BK 109, PGS 99 & 100	REV DATE / REV No
CHECKED _____ DATE	COUNTY OF LOS ANGELES	

2202/062579-0086
1005498 11 a05/29/09

EXHIBIT "A-2"

DESCRIPTION OF UTILITY EASEMENT

[see attached]

EXHIBIT "A-2"

Portion of APN. 7352-002-017

PARCEL 5-U.E.
UTILITY EASEMENT

THAT PORTION OF LOT 8, OF TRACT 7873, IN THE CITY OF TORRANCE, COUNTY OF LOS ANGELES, STATE OF CALIFORNIA, AS PER RECORDED IN BOOK 109, PAGES 99 AND 100 OF MAPS, IN THE OFFICE OF THE COUNTY RECORDER OF SAID COUNTY BOUNDED AND DESCRIBED AS FOLLOWS:

COMMENCING AT THE INTERSECTION OF THE NORTHERLY LINE OF SAID LOT 8 WITH THE NORTHEASTERLY BOUNDARY OF THAT CERTAIN 15.00 FOOT WIDE PARCEL OF LAND DEEDED BY CHANSLOR-CANFIELD MIDWAY OIL COMPANY TO THE ATCHISON, TOPEKA AND SANTA FE RAIL COMPANY FOR RIGHT OF WAY PURPOSES BY DEED DATED AUGUST 2, 1948 AND RECORDED IN BOOK 28452, PAGE 315 OF OFFICIAL RECORDS OF SAID COUNTY; THENCE SOUTH 48°00'00" EAST, 20.16 FEET TO THE TRUE POINT OF BEGINNING; THENCE EAST, 121.31 FEET; THENCE SOUTH 79°00'00" EAST, 304.12 FEET; THENCE SOUTH 89°59'51" EAST, 826.17 FEET; THENCE SOUTH, 37.35 FEET; THENCE NORTH 89°59'51" WEST, 148.61 FEET; THENCE NORTH 84°13'45" WEST, 103.18 FEET; THENCE NORTH 89°59'51" WEST, 577.50 FEET; THENCE NORTH 79°00'00" WEST, 304.12 FEET; THENCE WEST 88.72 FEET TO A POINT ON THE NORTHEASTERLY LINE OF THE RAILROAD RIGHT OF WAY; THENCE NORTH 48°00'00" WEST, 40.36 FEET ALONG SAID NORTHEASTERLY LINE TO THE TRUE POINT OF BEGINNING.

CONTAINING 35,453 SQUARE FEET OR 0.81 ACRES MORE OR LESS.

SEE EXHIBIT "B-2" MAP ATTACHED HERETO AND BY REFERENCE MADE A PART HEREOF.

EXHIBIT "B-2"

DEPICTION OF UTILITY EASEMENT

[see attached]

Exhibit "B-2"

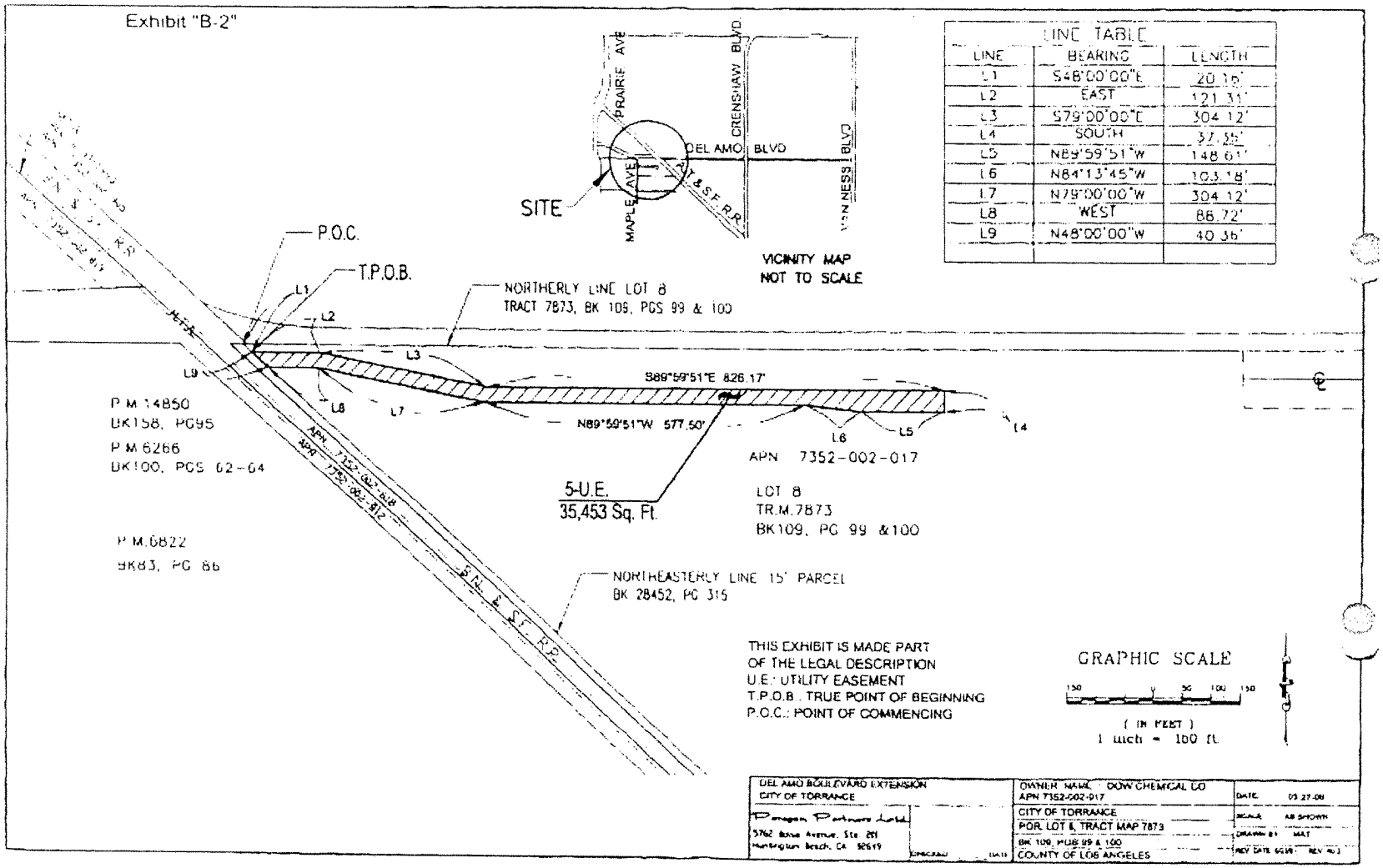

LINE TABLE		
LINE	BEARING	LENGTH
L1	S48°00'00"E	20.16'
L2	EAST	121.31'
L3	S79°00'00"E	304.12'
L4	SOUTH	37.35'
L5	N89°59'51"W	148.61'
L6	N84°13'45"W	103.18'
L7	N79°00'00"W	304.12'
L8	WEST	86.72'
L9	N48°00'00"W	40.36'

2202/062579-0086
1005498.11 a05/29/09

EXHIBIT "C-2"

GRANT OF UTILITY EASEMENT

[see attached]

RECORDING REQUESTED BY
AND WHEN RECORDED MAIL TO:

City of Torrance
3031 Torrance Boulevard
Torrance, CA 90503
Attention: City Clerk

Exempt from Recording Fee
Pursuant to Government Code Section 6103

Exempt from Documentary Transfer Tax
Pursuant to R&T Code § 11922

APN: 7352-002-017
FULL [ ] PORTION [X]

(Space above this line for Recorder's use)

GRANT OF UTILITY EASEMENT

For valuable consideration, receipt of which is hereby acknowledged, THE DOW CHEMICAL COMPANY, a Delaware corporation ("Grantor"), hereby grants to the CITY OF TORRANCE, a municipal corporation ("Grantee") a permanent utility easement (the "Easement") in, on, over, along, through, upon, under and across that certain real property (the "Easement Area"), described on Exhibit "A-2" and depicted on Exhibit "B-2" attached hereto and incorporated herein by this reference, for the following purposes:

A non-exclusive Easement for the construction, reconstruction, operation, maintenance, repair, and relocation of subsurface public utility and appurtenant facilities, including reasonable access of ingress and egress thereto, including the right to come onto the Easement Area with such machinery and equipment as may be necessary or convenient to the construction, reconstruction, operation, upgrade, maintenance, relocation, or servicing of such facilities.

This nonexclusive Easement includes the right to prohibit the owner of the property on which the Easement is situated from erecting any structures on or over the Easement Area, reserving to the owner of the property on which the Easement is situated the right to pave the Easement Area, such that vehicles can pass on or over the Easement Area, or park upon it. This nonexclusive Easement includes the right to prohibit the owner of the property on which the Easement is situated from planting or maintaining any trees more than eight feet of height at maturity on the Easement Area, but the owner of the property on which the Easement is situated shall have the right to place other landscaping on and over the Easement Area, or irrigation devices systems, subject to the prior written consent of the holder of the Easement, which consent shall not be unreasonably withheld. In performing any maintenance activities or exercising the repair or relocation rights hereunder, the holder of the Easement shall protect in place, or replace in kind, any paving, landscaping, or other improvements placed on the Easement Area consistent with the terms of this Easement.

The rights and obligations of the parties hereunder shall constitute covenants, benefits and burdens which run with the land and which shall be binding upon, and inure to the benefit of, the successors and assigns of each party hereto.

IN WITNESS WHEREOF, the Grantor and Grantee hereto has caused this Easement Deed to be executed as of this _____day of _____, 2009.

GRANTOR:

THE DOW CHEMICAL COMPANY,
a Delaware corporation

_____

By: _____

Its: _____

GRANTEE:

CITY OF TORRANCE, a California municipal corporation

By: _____
Frank Scotto, Mayor

ATTEST:

_____
Sue Herbers, City Clerk

APPROVED AS TO FORM:
JOHN L. FELLOWS III
City Attorney

By: _____
Patrick Q. Sullivan
Deputy City Attorney

STATE OF CALIFORNIA)
) ss.
COUNTY OF)

On _____, before me, _____, Notary Public, personally appeared _____, who proved to me on the basis of satisfactory evidence to be the person(s) whose name(s) is/are subscribed to the within instrument, and acknowledged to me that he/she/they executed the same in his/her/their authorized capacity(ies), and that by his/her/their signature(s) on the instrument the person(s), or the entity upon behalf of which the person(s) acted, executed the instrument.

I certify under PENALTY OF PERJURY under the laws of the State of California that the foregoing paragraph is true and correct.

WITNESS my hand and official seal.

Signature_____

[SEAL]

STATE OF CALIFORNIA)
) ss.
COUNTY OF)

On _____, before me, _____, Notary Public, personally appeared _____, who proved to me on the basis of satisfactory evidence to be the person(s) whose name(s) is/are subscribed to the within instrument, and acknowledged to me that he/she/they executed the same in his/her/their authorized capacity(ies), and that by his/her/their signature(s) on the instrument the person(s), or the entity upon behalf of which the person(s) acted, executed the instrument.

I certify under PENALTY OF PERJURY under the laws of the State of California that the foregoing paragraph is true and correct.

WITNESS my hand and official seal.

Signature_____

[SEAL]

STATE OF CALIFORNIA)
) ss.
COUNTY OF)

On _____, before me, _____, Notary Public, personally appeared _____, who proved to me on the basis of satisfactory evidence to be the person(s) whose name(s) is/are subscribed to the within instrument, and acknowledged to me that he/she/they executed the same in his/her/their authorized capacity(ies), and that by his/her/their signature(s) on the instrument the person(s), or the entity upon behalf of which the person(s) acted, executed the instrument.

I certify under PENALTY OF PERJURY under the laws of the State of California that the foregoing paragraph is true and correct.

WITNESS my hand and official seal.

Signature_____

[SEAL]

STATE OF CALIFORNIA)
) ss.
COUNTY OF)

On _____, before me, _____, Notary Public, personally appeared _____, who proved to me on the basis of satisfactory evidence to be the person(s) whose name(s) is/are subscribed to the within instrument, and acknowledged to me that he/she/they executed the same in his/her/their authorized capacity(ies), and that by his/her/their signature(s) on the instrument the person(s), or the entity upon behalf of which the person(s) acted, executed the instrument.

I certify under PENALTY OF PERJURY under the laws of the State of California that the foregoing paragraph is true and correct.

WITNESS my hand and official seal.

Signature_____

[SEAL]

Exhibit "A-2"

LEGAL DESCRIPTION OF THE EASEMENT

(attached)

EXHIBIT "A-2"

Portion of APN. 7352-002-017

PARCEL 5-U.E.
UTILITY EASEMENT

THAT PORTION OF LOT 8, OF TRACT 7873, IN THE CITY OF TORRANCE, COUNTY OF LOS ANGELES, STATE OF CALIFORNIA, AS PER RECORDED IN BOOK 109, PAGES 99 AND 100 OF MAPS, IN THE OFFICE OF THE COUNTY RECORDER OF SAID COUNTY BOUNDED AND DESCRIBED AS FOLLOWS:

COMMENCING AT THE INTERSECTION OF THE NORTHERLY LINE OF SAID LOT 8 WITH THE NORTHEASTERLY BOUNDARY OF THAT CERTAIN 15.00 FOOT WIDE PARCEL OF LAND DEEDED BY CHANSLOR-CANFIELD MIDWAY OIL COMPANY TO THE ATCHISON, TOPEKA AND SANTA FE RAIL COMPANY FOR RIGHT OF WAY PURPOSES BY DEED DATED AUGUST 2, 1948 AND RECORDED IN BOOK 28452, PAGE 315 OF OFFICIAL RECORDS OF SAID COUNTY; THENCE SOUTH 48°00'00" EAST, 20.16 FEET TO THE TRUE POINT OF BEGINNING; THENCE EAST, 121.31 FEET; THENCE SOUTH 79°00'00" EAST, 304.12 FEET; THENCE SOUTH 89°59'51" EAST, 826.17 FEET; THENCE SOUTH, 37.35 FEET; THENCE NORTH 89°59'51" WEST, 148.61 FEET; THENCE NORTH 84°13'45" WEST, 103.18 FEET; THENCE NORTH 89°59'51" WEST, 577.50 FEET; THENCE NORTH 79°00'00" WEST, 304.12 FEET; THENCE WEST 88.72 FEET TO A POINT ON THE NORTHEASTERLY LINE OF THE RAILROAD RIGHT OF WAY; THENCE NORTH 48°00'00" WEST, 40.36 FEET ALONG SAID NORTHEASTERLY LINE TO THE TRUE POINT OF BEGINNING.

CONTAINING 35,453 SQUARE FEET OR 0.81 ACRES MORE OR LESS.

SEE EXHIBIT "B-2" MAP ATTACHED HERETO AND BY REFERENCE MADE A PART HEREOF.

Exhibit "B-2"

MAP WITH DEPICTION OF THE EASEMENT

(attached)

Exhibit "B-2"

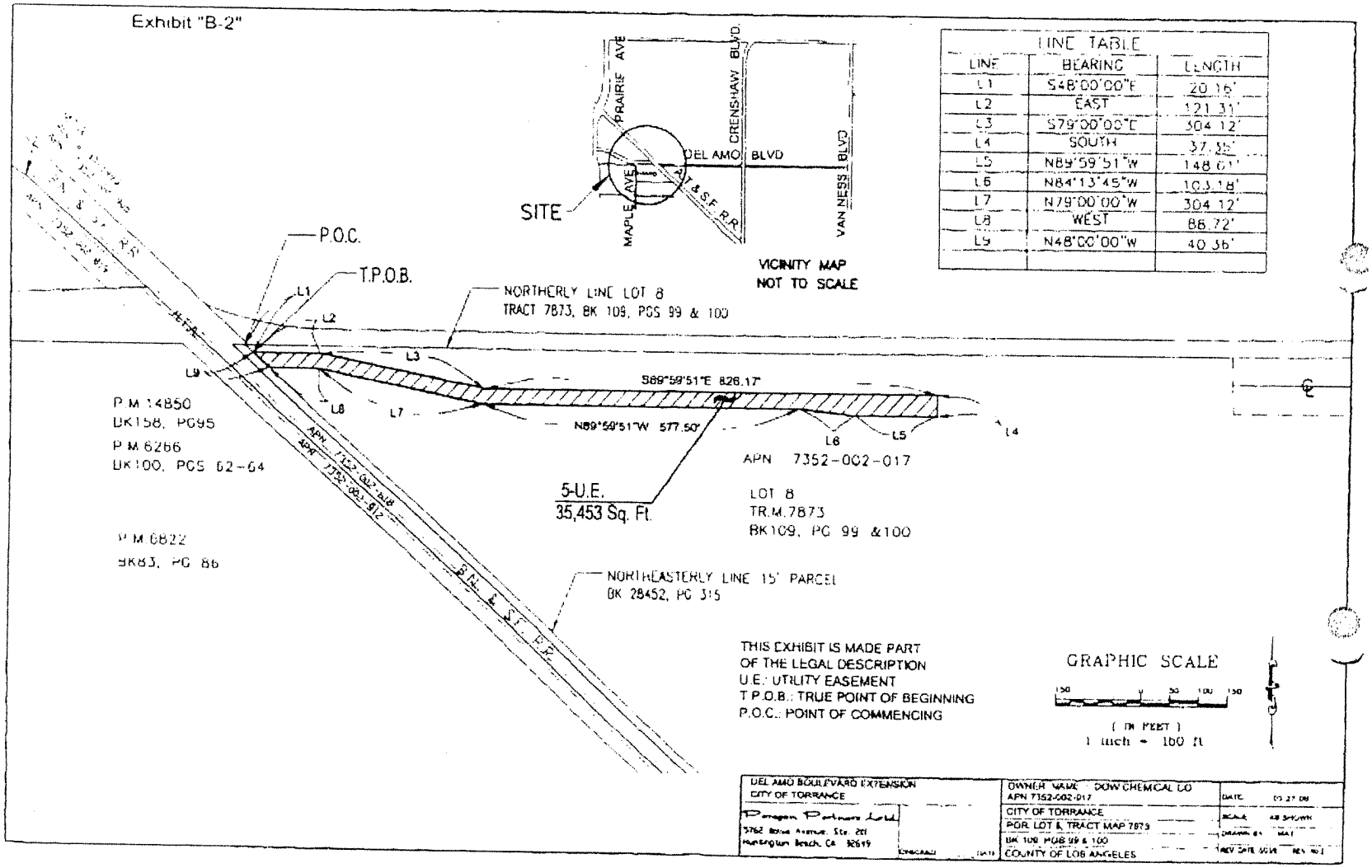

LINE TABLE		
LINE	BEARING	LENGTH
L1	S48°00'00"E	20.16'
L2	EAST	121.31'
L3	S79°00'00"E	304.12'
L4	SOUTH	37.35'
L5	N89°59'51"W	148.61'
L6	N84°13'45"W	103.18'
L7	N79°00'00"W	304.12'
L8	WEST	86.72'
L9	N48°00'00"W	40.36'

2202/062579-0086
1005498 11 a05/29/09

EXHIBIT "B-3"

DEPICTION OF TEMPORARY CONSTRUCTION EASEMENT

[see attached]

EXHIBIT "B-3"

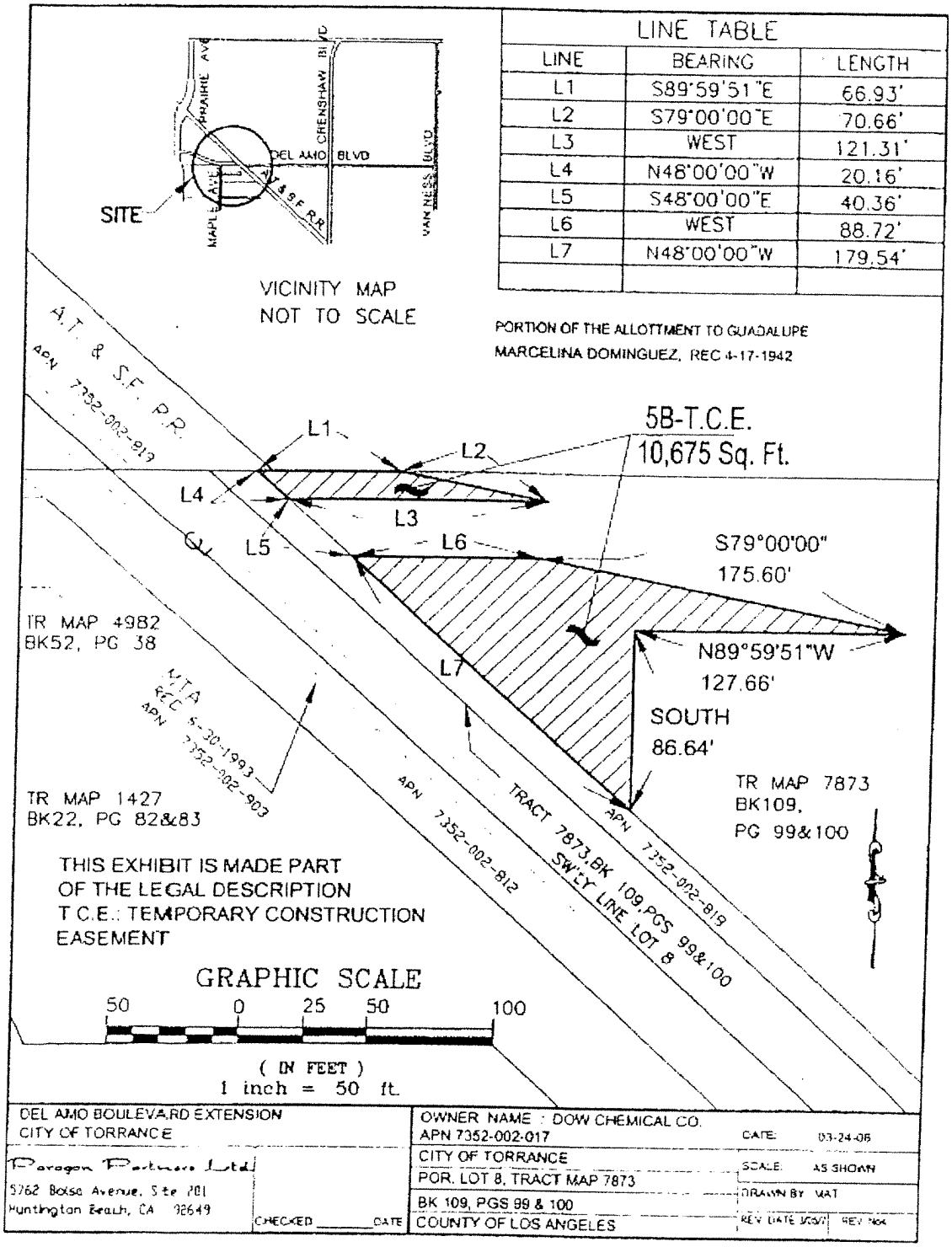

LINE TABLE		
LINE	BEARING	LENGTH
L1	S89°59'51"E	66.93'
L2	S79°00'00"E	70.66'
L3	WEST	121.31'
L4	N48°00'00"W	20.16'
L5	S48°00'00"E	40.36'
L6	WEST	88.72'
L7	N48°00'00"W	179.54'

PORTION OF THE ALLOTMENT TO GUADALUPE MARCELINA DOMINGUEZ, REC 4-17-1942

DEL AMO BOULEVARD EXTENSION
CITY OF TORRANCE

Paragon Partners Ltd
5762 Boise Avenue, Ste 201
Huntington Beach, CA 92649

CHECKED _____ DATE

OWNER NAME : DOW CHEMICAL CO.
APN 7352-002-017
CITY OF TORRANCE
POR. LOT 8, TRACT MAP 7873
BK 109, PGS 99 & 100
COUNTY OF LOS ANGELES

DATE: 03-24-06
SCALE: AS SHOWN
DRAWN BY MAT
REV DATE
REV NO.

2202/062579-0086
1005498 11 a05/29/09

EXHIBIT "C-3"

GRANT OF TEMPORARY CONSTRUCTION EASEMENT

[see attached]

RECORDING REQUESTED BY
AND WHEN RECORDED MAIL TO:

City of Torrance
3031 Torrance Boulevard
Torrance, CA 90503
Attention: City Clerk

Exempt from Recording Fee
Pursuant to Government Code Section 6103

Exempt from Documentary Transfer Tax
Pursuant to R&T Code § 11922

APN: 7352-002-017
FULL [ ] PORTION [X]

(Space above this line for Recorder's use)

GRANT OF TEMPORARY CONSTRUCTION EASEMENT

For valuable consideration, receipt of which is hereby acknowledged, THE DOW CHEMICAL COMPANY, a Delaware corporation ("Grantor"), hereby grants to the CITY OF TORRANCE, a municipal corporation ("Grantee") a temporary construction easement (the "Temporary Construction Easement") in, on, over, along, through, upon, under and across that certain real property (the "Easement Area"), depicted on Exhibit "B-3" attached hereto and incorporated herein by this reference.

1. Purpose. The Temporary Construction Easement is a nonexclusive easement for Grantee, its officers, agents, employees, and contractors, to enter upon, occupy, and pass over the Easement Area deemed reasonably necessary for all purposes incidental to the Del Amo Boulevard from Madrona Avenue to Crenshaw Boulevard Project, in accordance with the approved street construction plans (the "Project"), including, without limitation, Grantee's right to perform within the Easement Area, any necessary excavation; grading; earth fill; compaction; installation of concrete forms; landscaping; irrigation; utility; and sign relocation; accommodation of private drainage facilities; and deposit of tools, equipment, and material for all such necessary activities which are reasonably incidental to the work being performed on said property in connection with the Project.

Such incidental activities shall include, but not be limited to, utilizing the Easement Area for adjusting grade differentials between the planned street and the adjoining real property and/or matching existing concrete and/or asphalt paved areas, and/or natural grade areas, or such work as may pertain to on-site improvements by Grantee to render the Easement Area or the larger parcel to which it pertains in the same functional condition as reasonably practicable to the condition before the Project in terms of access, irrigation, and relation of public right of way improvements to the larger parcel.

2. Exclusions. The Temporary Construction Easement shall not include the right to store any materials or park any vehicles which are not incidental to the work to be performed on

site in connection with the Project, nor to unreasonably block vehicular access to the larger parcel of property of which the Easement Area is a part, nor exercise the uses of the Temporary Construction Easement outside of the Easement Area. In connection with the exercise of the Temporary Construction Easement rights hereunder, and except as may be otherwise indicated on the approved Project plans, Grantee shall protect all structures on the Easement Area in place, and shall protect or restore all improvements thereon.

3. Term. The rights granted hereunder shall commence thirty (30) days after written notification by Grantee to Grantor of the commencement of construction of the Project and shall continue in full force and effect until written notice to Grantor that the Temporary Construction Easement is no longer needed by Grantee, or eighteen (18) months after notice of the initiation of the Temporary Construction Easement, whichever is earlier. Upon termination of the Temporary Construction Easement, the Easement Area shall be restored to a condition that is as functionally equivalent as is practicable to its condition prior to the commencement of the work, consistent with the Project as designed and as to be constructed.

4. Successors and Assigns; Covenants Running With the Land. The rights and obligations of the parties hereunder shall constitute covenants, benefits and burdens which run with the land and which shall be binding upon, and inure to the benefit of, the successors and assigns of each party hereto.

[Signatures on next page]

IN WITNESS WHEREOF, the Grantor and Grantee hereto has caused this Easement Deed to be executed as of this _____day of _____, 2009.

GRANTOR:

THE DOW CHEMICAL COMPANY,
a Delaware corporation

_____

By: _____

Its: _____

GRANTEE:

CITY OF TORRANCE, a California municipal corporation

By: _____
Frank Scotto, Mayor

ATTEST:

_____
Sue Herbers, City Clerk

APPROVED AS TO FORM:
JOHN L. FELLOWS III
City Attorney

By: _____
Patrick Q. Sullivan
Deputy City Attorney

STATE OF CALIFORNIA)
) ss.
COUNTY OF)

On _____, before me, _____, Notary Public, personally appeared _____, who proved to me on the basis of satisfactory evidence to be the person(s) whose name(s) is/are subscribed to the within instrument, and acknowledged to me that he/she/they executed the same in his/her/their authorized capacity(ies), and that by his/her/their signature(s) on the instrument the person(s), or the entity upon behalf of which the person(s) acted, executed the instrument.

I certify under PENALTY OF PERJURY under the laws of the State of California that the foregoing paragraph is true and correct.

WITNESS my hand and official seal.

Signature_____

[SEAL]

STATE OF CALIFORNIA)
) ss.
COUNTY OF)

On _____, before me, _____, Notary Public, personally appeared _____, who proved to me on the basis of satisfactory evidence to be the person(s) whose name(s) is/are subscribed to the within instrument, and acknowledged to me that he/she/they executed the same in his/her/their authorized capacity(ies), and that by his/her/their signature(s) on the instrument the person(s), or the entity upon behalf of which the person(s) acted, executed the instrument.

I certify under PENALTY OF PERJURY under the laws of the State of California that the foregoing paragraph is true and correct.

WITNESS my hand and official seal.

Signature_____

[SEAL]

STATE OF CALIFORNIA)
) ss.
COUNTY OF)

On _____, before me, _____, Notary Public, personally appeared _____, who proved to me on the basis of satisfactory evidence to be the person(s) whose name(s) is/are subscribed to the within instrument, and acknowledged to me that he/she/they executed the same in his/her/their authorized capacity(ies), and that by his/her/their signature(s) on the instrument the person(s), or the entity upon behalf of which the person(s) acted, executed the instrument.

I certify under PENALTY OF PERJURY under the laws of the State of California that the foregoing paragraph is true and correct.

WITNESS my hand and official seal.

Signature_____

[SEAL]

STATE OF CALIFORNIA)
) ss.
COUNTY OF)

On _____, before me, _____, Notary Public, personally appeared _____, who proved to me on the basis of satisfactory evidence to be the person(s) whose name(s) is/are subscribed to the within instrument, and acknowledged to me that he/she/they executed the same in his/her/their authorized capacity(ies), and that by his/her/their signature(s) on the instrument the person(s), or the entity upon behalf of which the person(s) acted, executed the instrument.

I certify under PENALTY OF PERJURY under the laws of the State of California that the foregoing paragraph is true and correct.

WITNESS my hand and official seal.

Signature_____

[SEAL]

Exhibit "B-3"

MAP WITH DEPICTION OF THE EASEMENT

(attached)

EXHIBIT "B-3"

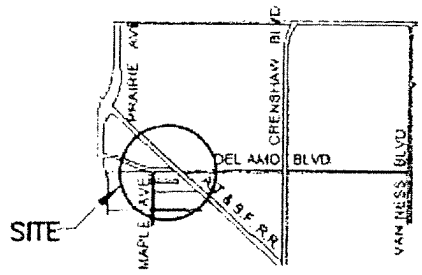

VICINITY MAP
NOT TO SCALE

LINE TABLE		
LINE	BEARING	LENGTH
L1	S89°59'51"E	66.93'
L2	S79°00'00"E	70.66'
L3	WEST	121.31'
L4	N48°00'00"W	20.16'
L5	S48°00'00"E	40.36'
L6	WEST	88.72'
L7	N48°00'00"W	179.54'

PORTION OF THE ALLOTTMENT TO GUADALUPE
MARCELINA DOMINGUEZ, REC 4-17-1942

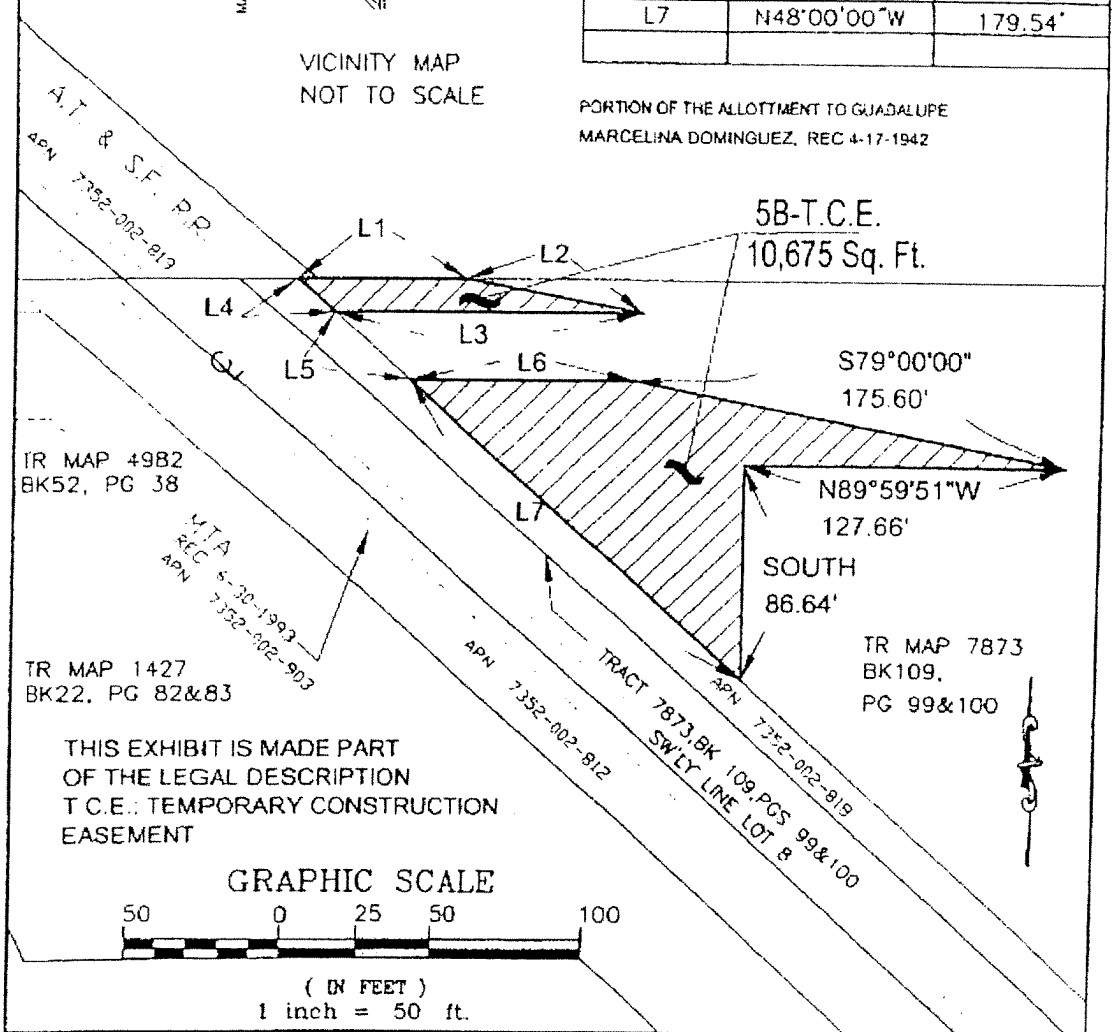

THIS EXHIBIT IS MADE PART
OF THE LEGAL DESCRIPTION
T.C.E.: TEMPORARY CONSTRUCTION
EASEMENT

GRAPHIC SCALE

50 0 25 50 100

(IN FEET)
1 inch = 50 ft.

DEL AMO BOULEVARD EXTENSION CITY OF TORRANCE	OWNER NAME : DOW CHEMICAL CO. APN 7352-002-017	DATE: 03-24-06
Paragon Partners Ltd. 5762 Bolsa Avenue, Ste. 201 Huntington Beach, CA 92649	CITY OF TORRANCE	SCALE: AS SHOWN
	POR. LOT 8, TRACT MAP 7873	DRAWN BY MAT
CHECKED _____ DATE	BK 109, PGS 99 & 100	
	COUNTY OF LOS ANGELES	REV DATE 3/05/07 REV No4

EXHIBIT "B-4"

DEPICTION OF
TEMPORARY EASEMENT FOR ON-SITE IMPROVEMENTS

[see attached]

LINE TABLE			LINE TABLE		
LINE	BEARING	LENGTH	LINE	BEARING	LENGTH
L1	WEST	88.72'	L13	S00°02'24"E	17.49'
L2	S00°34'10"E	28.57'	L14	N89°53'42"W	64.95'
L3	S84°13'45"E	102.97'	L15	N00°30'21"E	49.09'
L4	NORTH	148.61'	L16	N36°09'08"W	28.18'
L5	S00°34'10"E	28.57'	L17	WEST	135.84'
L6	N89°59'51"W	109.93'	L18	S29°15'57"W	85.26'
L7	S00°08'09"E	44.94'	L19	NORTH	29.38'
L8	S89°39'31"E	100.55'	L20	N00°00'09"E	29.43'
L9	SOUTH	49.89'	L21	S00°33'46"W	10.00'
L10	WEST	7.00'	L22	N89°59'51"W	26.03'
L11	N14°54'41"W	51.48'	L23	N89°59'51"W	188.42'
L12	N89°48'37"W	44.83'	L24	N79°01'38"W	163.87'

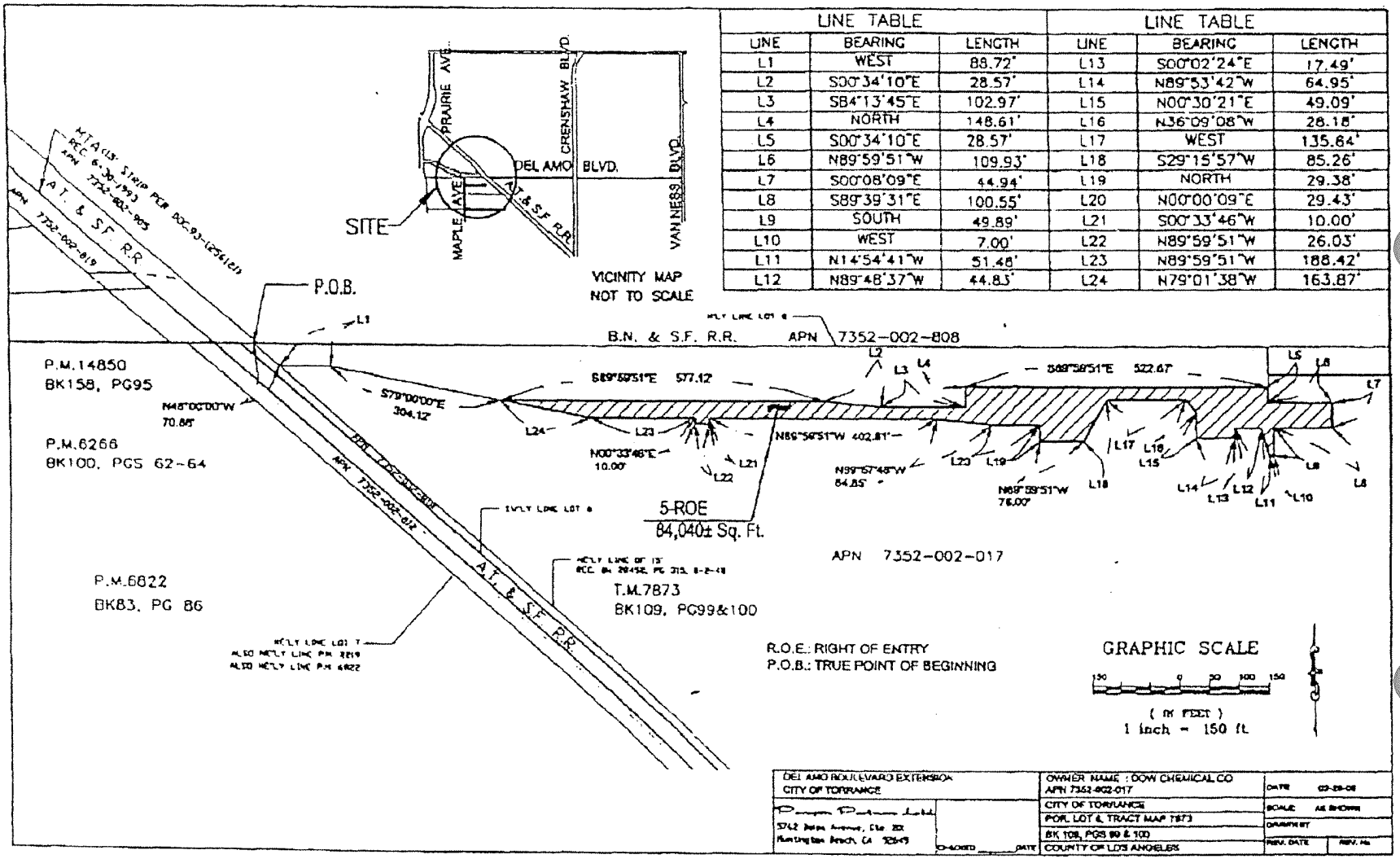

2202/062579-0086
1005498.11 a05/29/09

EXHIBIT "C-4"

GRANT OF
TEMPORARY EASEMENT FOR ON-SITE IMPROVEMENTS

[see attached]

RECORDING REQUESTED BY
AND WHEN RECORDED MAIL TO:

City of Torrance
3031 Torrance Boulevard
Torrance, CA 90503
Attention: City Clerk

Exempt from Recording Fee
Pursuant to Government Code Section 6103

Exempt from Documentary Transfer Tax
Pursuant to R&T Code § 11922

APN: 7352-002-017
FULL [ ] PORTION [X]

(Space above this line for Recorder's use)

GRANT OF
TEMPORARY EASEMENT FOR ON-SITE IMPROVEMENTS

For valuable consideration, receipt of which is hereby acknowledged, THE DOW CHEMICAL COMPANY, a Delaware corporation ("Grantor"), hereby grants to the CITY OF TORRANCE, a municipal corporation ("Grantee") a temporary easement (the "Temporary Easement for On-Site Improvements") in, on, over, along, through, upon, under and across that certain real property (the "Easement Area"), depicted on Exhibit "B-4" attached hereto and incorporated herein by this reference.

1. Purpose. The Temporary Easement for On-Site Improvements is a nonexclusive easement for Grantee, its officers, agents, employees, and contractors, to enter upon, occupy, and pass over the Easement Area to construct various on-site improvements called for in the Del Amo Boulevard From Madrona Ave. to Crenshaw Boulevard Project, in accordance with the approved street construction plans (the "Project"). Such on-site improvements include the construction of a new 20 foot internal access road, a deceleration lane for vehicle entry and stacking, replacement and relocation of existing perimeter fencing, relocation or widening of existing driveways, and sign relocation. The Temporary Easement for On-Site Improvements shall include the right to perform within the Easement Area, any activities necessary or convenient to the construction of such on-site improvements, including excavation; grading; earth fill; compaction, installation of concrete forms; landscaping; irrigation; utility relocation; accommodation of private drainage facilities and; and deposit of tools, equipment, and material for all such necessary activities which are reasonably incidental to the work being performed on said property in connection with the Project.

Such incidental activities shall include, but not be limited to, utilizing the Easement Area for establishing internal roadway alignment, relocating or replacing existing perimeter fencing, modifying driveways for other vehicle entry points to be compatible with the

Project, adjusting grade differentials between the planned street and the adjoining real property and/or matching existing concrete and/or asphalt paved areas, and/or natural grade areas, or such work as may pertain to on-site improvements by Grantee as reflected in the approved construction plans for the Project.

2. Exclusions. The Temporary Easement for On-Site Improvements shall not include the right to store any materials or park any vehicles which are not incidental to the work to be performed on site in connection with the Project, nor to unreasonably block vehicular access to the larger parcel of property of which the Easement Area is a part, nor exercise the uses of the Temporary Easement for On-Site Improvements outside of the Easement Area. In connection with the exercise of the Temporary Easement for On-Site Improvements rights hereunder, and except as may be otherwise indicated on the approved Project plans, Grantee shall protect all structures on the Easement Area in place, and shall protect or restore all improvements thereon.

3. Term. The rights granted hereunder shall commence thirty (30) days after written notification to the Grantor of the commencement of construction of the Project and shall continue in full force and effect until written notice to Grantor that the Temporary Easement for On-Site Improvements is no longer needed by Grantee, or eighteen (18) months after notice of the initiation of the Temporary Easement for On-Site Improvements, whichever is earlier. Upon termination of the Temporary Easement for On-Site Improvements, the Easement Area shall be restored to a condition that is as functionally equivalent as is practicable to its condition prior to the commencement of the work, consistent with the Project as designed and as to be constructed.

4. Successors and Assigns; Covenants Running With the Land. The rights and obligations of the parties hereunder shall constitute covenants, benefits and burdens which run with the land and which shall be binding upon, and inure to the benefit of, the successors and assigns of each party hereto.

[Signatures on next page]

IN WITNESS WHEREOF, the Grantor and Grantee hereto has caused this Easement Deed to be executed as of this _____day of _____, 2009.

GRANTOR:

THE DOW CHEMICAL COMPANY,
a Delaware corporation

_____

By: _____
Its: _____

GRANTEE:

CITY OF TORRANCE, a California municipal corporation

By: _____
Frank Scotto, Mayor

ATTEST:

_____
Sue Herbers, City Clerk

APPROVED AS TO FORM:
JOHN L. FELLOWS III
City Attorney

By: _____
Patrick Q. Sullivan
Deputy City Attorney

STATE OF CALIFORNIA)
) ss.
COUNTY OF)

On _____, before me, _____, Notary Public, personally appeared _____, who proved to me on the basis of satisfactory evidence to be the person(s) whose name(s) is/are subscribed to the within instrument, and acknowledged to me that he/she/they executed the same in his/her/their authorized capacity(ies), and that by his/her/their signature(s) on the instrument the person(s), or the entity upon behalf of which the person(s) acted, executed the instrument.

I certify under PENALTY OF PERJURY under the laws of the State of California that the foregoing paragraph is true and correct.

WITNESS my hand and official seal.

Signature_____

[SEAL]

STATE OF CALIFORNIA)
) ss.
COUNTY OF)

On _____, before me, _____, Notary Public, personally appeared _____, who proved to me on the basis of satisfactory evidence to be the person(s) whose name(s) is/are subscribed to the within instrument, and acknowledged to me that he/she/they executed the same in his/her/their authorized capacity(ies), and that by his/her/their signature(s) on the instrument the person(s), or the entity upon behalf of which the person(s) acted, executed the instrument.

I certify under PENALTY OF PERJURY under the laws of the State of California that the foregoing paragraph is true and correct.

WITNESS my hand and official seal.

Signature_____

[SEAL]

STATE OF CALIFORNIA)
) ss.
COUNTY OF)

On _____, before me, _____, Notary Public, personally appeared _____, who proved to me on the basis of satisfactory evidence to be the person(s) whose name(s) is/are subscribed to the within instrument, and acknowledged to me that he/she/they executed the same in his/her/their authorized capacity(ies), and that by his/her/their signature(s) on the instrument the person(s), or the entity upon behalf of which the person(s) acted, executed the instrument.

I certify under PENALTY OF PERJURY under the laws of the State of California that the foregoing paragraph is true and correct.

WITNESS my hand and official seal.

Signature_____

[SEAL]

STATE OF CALIFORNIA)
) ss.
COUNTY OF)

On _____, before me, _____, Notary Public, personally appeared _____, who proved to me on the basis of satisfactory evidence to be the person(s) whose name(s) is/are subscribed to the within instrument, and acknowledged to me that he/she/they executed the same in his/her/their authorized capacity(ies), and that by his/her/their signature(s) on the instrument the person(s), or the entity upon behalf of which the person(s) acted, executed the instrument.

I certify under PENALTY OF PERJURY under the laws of the State of California that the foregoing paragraph is true and correct.

WITNESS my hand and official seal.

Signature_____

[SEAL]

Exhibit "B-4"

MAP WITH DEPICTION OF THE EASEMENT

(attached)

LINE TABLE			LINE TABLE		
LINE	BEARING	LENGTH	LINE	BEARING	LENGTH
L1	WEST	88.72'	L13	S00°02'24"E	17.49'
L2	S00°34'10"E	28.57'	L14	N89°53'42"W	64.95'
L3	S84°13'45"E	102.97'	L15	N00°30'21"E	49.09'
L4	NORTH	148.61'	L16	N36°09'08"W	28.18'
L5	S00°34'10"E	28.57'	L17	WEST	135.64'
L6	N89°59'51"W	109.93'	L18	S29°15'57"W	85.26'
L7	S00°08'09"E	44.94'	L19	NORTH	29.38'
L8	S89°39'31"E	100.55'	L20	N00°00'09"E	29.43'
L9	SOUTH	49.89'	L21	S00°33'46"W	10.00'
L10	WEST	7.00'	L22	N89°59'51"W	26.03'
L11	N14°54'41"W	51.46'	L23	N89°59'51"W	188.42'
L12	N89°48'37"W	44.83'	L24	N79°01'38"W	163.87'

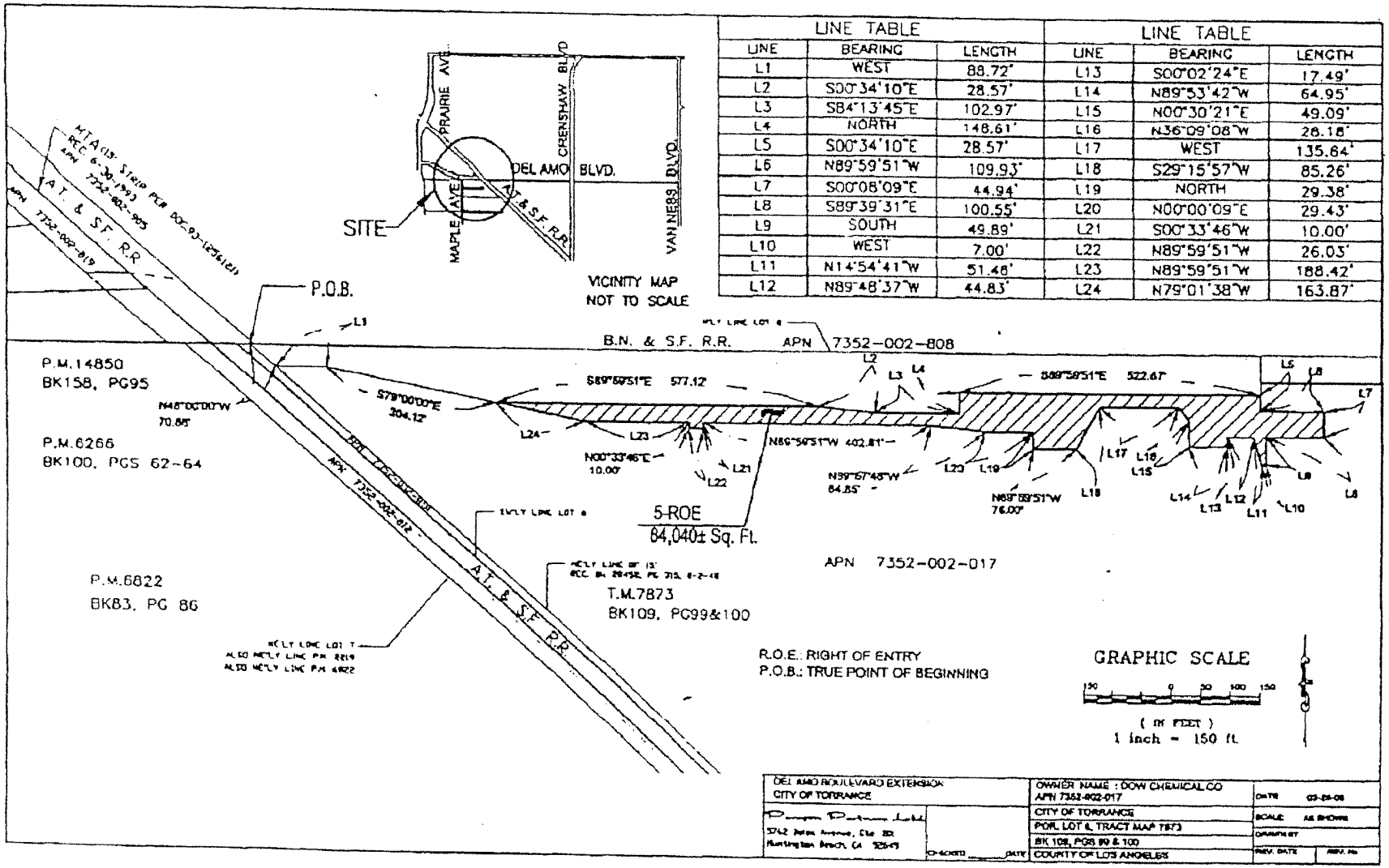

2202/062579-0086
1005498.11 a05/29/09

EXHIBIT "A-5"

DESCRIPTION OF
ELECTRICAL UTILITY RELOCATION EASEMENT

[see attached]

EXHIBIT "A-5"

That certain real property in the County of Los Angeles, State of California, described as follows:

A 10.00 FOOT WIDE STRIP OF LAND LYING WITHIN LOT 8 OF TRACT NO. 7873, AS PER MAP RECORDED IN BOOK 109, PAGES 99 AND 100 OF MAPS, IN THE OFFICE OF THE COUNTY RECORDER OF SAID COUNTY, THE CENTERLINE OF SAID STRIP BEING DESCRIBED AS FOLLOWS:

BEGINNING AT THE INTERSECTION OF THE WESTERLY LINE OF THAT CERTAIN 100.00 FOOT WIDE STRIP OF LAND DESCRIBED IN THE DEDICATION OF EASEMENT GRANTED TO THE CITY OF TORRANCE, RECORDED ON APRIL 07, 1969 AS INSTRUMENT NO. 3020, OF OFFICIAL RECORDS IN THE OFFICE OF SAID COUNTY RECORDER, WITH A LINE PARALLEL WITH AND DISTANT 95.61 FEET SOUTHERLY, MEASURED AT RIGHT ANGLES FROM THE NORTHERLY LINE OF SAID LOT 8; THENCE LEAVING SAID WESTERLY LINE, SOUTH 88°08'28" WEST 163.81 FEET; THENCE NORTH 81°28'30" WEST 180.50 FEET; THENCE NORTH 89°35'34" WEST 96.26 FEET; THENCE NORTH 89°59'51" WEST 202.81 FEET; THENCE SOUTH 89°59'45" WEST 222.56 FEET; THENCE SOUTH 00°00'09" WEST 31.68 FEET; THENCE NORTH 89°59'51" WEST 181.94 FEET; THENCE NORTH 89°59'52" WEST 196.71 FEET; THENCE SOUTH 89°59'39" WEST 158.23 FEET; THENCE NORTH 81°42'43" WEST 40.00 FEET TO A POINT OF ENDING.

THE SIDELINES OF SAID STRIP ARE TO BE PROLONGED OR SHORTENED TO TERMINATE EASTERLY IN THE WESTERLY LINE OF SAID CERTAIN 100.00 FOOT WIDE STRIP OF LAND AND ITS SOUTHERLY PROLONGATION, AND TO JOIN AT THE ANGLE POINTS.

EXHIBIT "B-5"

DEPICTION OF
ELECTRICAL UTILITY RELOCATION EASEMENT

[see attached]

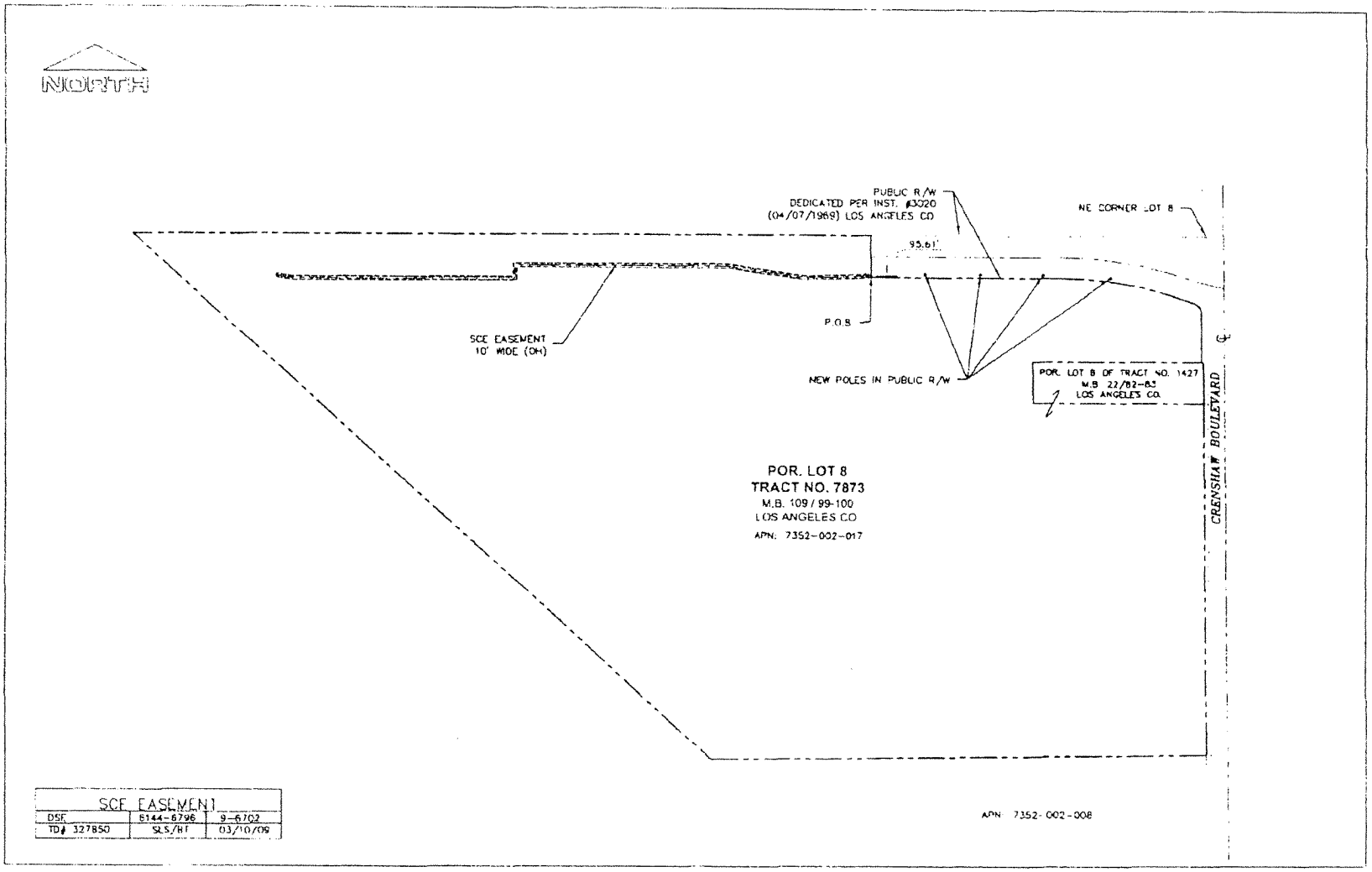

SCE EASEMENT		
DSF	6144-6796	9-6702
TD# 327850	SLS/HT	03/10/09

2202/062579-0086
1005498 11 a05/29/09

EXHIBIT "C-5"

GRANT OF
ELECTRICAL UTILITY RELOCATION EASEMENT

[see attached]

RECORDING REQUESTED BY

SOUTHERN CALIFORNIA EDISON

An EDISON INTERNATIONAL Company

WHEN RECORDED MAIL TO

SOUTHERN CALIFORNIA EDISON COMPANY

Corporate Real Estate
14799 Chestnut Street
Westminster, CA 92683-5240

Attn: Distribution/TRES

SPACE ABOVE THIS LINE FOR RECORDER'S USE

GRANT OF EASEMENT

DOCUMENTARY TRANSFER TAX $ NONE (VALUE AND CONSIDERATION LESS THAN $100.00) SCE Company SIGNATURE OF DECLARANT OR AGENT DETERMINING TAX FIRM NAME	DISTRICT South Bay	WORK ORDER 6144-6796 ID# 327850	IDENTITY 9-6702	MAP SIZE
	FIM 39-66D APN 7352-002-017	APPROVED CORPORATE REAL ESTATE	BY SLS/BT	DATE 03/10/09

THE DOW CHEMICAL COMPANY, a Delaware corporation (hereinafter referred to as "Grantor"), hereby grants to SOUTHERN CALIFORNIA EDISON COMPANY, a corporation, its successors and assigns (hereinafter referred to as "Grantee"), an easement and right of way to construct, use, maintain, operate, alter, add to, repair, replace, reconstruct, inspect and remove at any time and from time to time overhead electrical supply systems and communication systems (hereinafter referred to as "systems"), consisting of poles, guy wires and anchors, crossarms, wires, and other appurtenant fixtures and/or equipment necessary or useful for distributing electrical energy and for transmitting intelligence by electrical means, in, on, over, across and along that certain real property in the County of Los Angeles, State of California, described as follows:

A 10.00 FOOT WIDE STRIP OF LAND LYING WITHIN LOT 8 OF TRACT NO. 7873, AS PER MAP RECORDED IN BOOK 109, PAGES 99 AND 100 OF MAPS, IN THE OFFICE OF THE COUNTY RECORDER OF SAID COUNTY, THE CENTERLINE OF SAID STRIP BEING DESCRIBED AS FOLLOWS:

BEGINNING AT THE INTERSECTION OF THE WESTERLY LINE OF THAT CERTAIN 100.00 FOOT WIDE STRIP OF LAND DESCRIBED IN THE DEDICATION OF EASEMENT GRANTED TO THE CITY OF TORRANCE, RECORDED ON APRIL 07, 1969 AS INSTRUMENT NO. 3020, OF OFFICIAL RECORDS, IN THE OFFICE OF SAID COUNTY RECORDER, WITH A LINE PARALLEL WITH AND DISTANT 95.61 FEET SOUTHERLY, MEASURED AT RIGHT ANGLES FROM THE NORTHERLY LINE OF SAID LOT 8; THENCE LEAVING SAID WESTERLY LINE, SOUTH 88°08'28" WEST 163.81 FEET; THENCE NORTH 81°28'30" WEST 180.50 FEET; THENCE NORTH 89°35'34" WEST 96.26 FEET; THENCE NORTH 89°59'51" WEST 202.81 FEET; THENCE SOUTH 89°59'45" WEST 222.56 FEET; THENCE SOUTH 00°00'09" WEST 31.68 FEET; THENCE NORTH 89°59'51" WEST 181.94 FEET; THENCE NORTH 89°59'52" WEST 196.71 FEET; THENCE SOUTH 89°59'39" WEST 158.23 FEET; THENCE NORTH 81°42'43" WEST 40.00 FEET TO A POINT OF ENDING

THE SIDELINES OF SAID STRIP ARE TO BE PROLONGED OR SHORTENED TO TERMINATE EASTERLY IN THE WESTERLY LINE OF SAID CERTAIN 100.00 FOOT WIDE STRIP OF LAND AND ITS SOUTHERLY PROLONGATION, AND TO JOIN AT THE ANGLE POINTS.

This legal description was prepared pursuant to Sec. 8730(c) of the Business & Professions Code.

Grantor hereby also grants to Grantee, its successors and assigns, and its and their contractors, agents and employees, the right of free access to said systems and facilities and every part thereof, at all times, for the purpose of exercising the rights

2202/062579-0086
1005498 11 a05/29/09

herein granted, and the right to clear and to keep clear the above described real property, free from explosives, buildings, equipment, brush, combustible material and any and all other obstructions of any kind, and the right to trim or remove any tree or shrub which, in the opinion of Grantee, may endanger said systems and facilities, or any part thereof, or interfere with the exercise of the rights herein granted.

EXECUTED this _____ day of _____, 20__.

GRANTOR

THE DOW CHEMICAL COMPANY, a Delaware corporation

_____
Signature

_____
Print Name

_____
Title

State of California)
)
County of _____)

On _____ before me, _____, personally
(here insert name and title of the officer)

appeared _____
who proved to me on the basis of satisfactory evidence to be the person(s) whose name(s) is/are subscribed to the within instrument and acknowledged to me that he/she/they executed the same in his/her/their authorized capacity(ies), and that by his/her/their signature(s) on the instrument the person(s), or the entity upon behalf of which the person(s) acted, executed the instrument.

I certify under PENALTY OF PERJURY under the laws of the State of California that the foregoing paragraph is true and correct.

WITNESS my hand and official seal.

Signature_____

(This area for notary stamp)

DSE_____
6144-6796 9-6702
ID: 327850

2202/062579-0086
1005498 11 a05/29/09

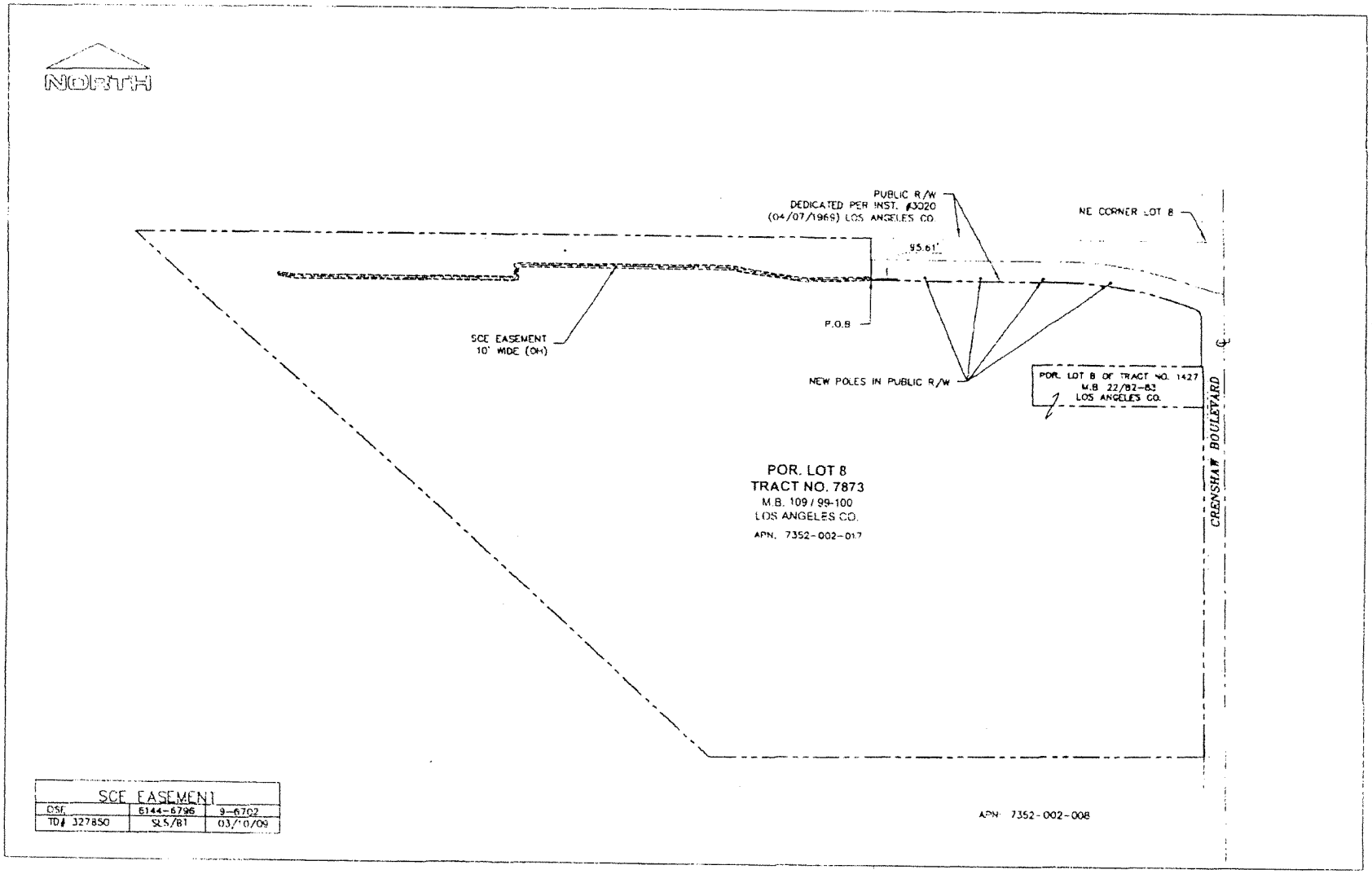

2202/062579-0086
1005498 11 a05/29/09

APPENDIX XV

EXXONMOBIL OIL CORPORATION

1999 AGREEMENT

DEL AMO BLVD EXTENSION, T-30

1999 AGREEMENT BETWEEN MOBIL OIL CORPORATION AND THE CITY OF TORRANCE
ExxonMobil Oil Corporation

The Table below summarizes information and requirements from the above-referenced Agreement between the City and ExxonMobil Oil Corporation (formerly Mobil Oil Corporation). The purpose is to inform a prospective Bidder and Contractor.

Sec. 4A	☐ All recommendations contained in Safety Advisor's Del Amo Blvd Ext Analysis Report of May 5, 1999, are implemented ▪ Attached as Exhibit B

AGREEMENT BETWEEN MOBIL OIL CORPORATION AND THE CITY OF TORRANCE

This Agreement is made and entered into as of May 11, 1999 ("Effective Date"), by and between the City of Torrance, a municipal corporation ("City") and the Mobil Oil Corporation, a New York corporation ("Mobil").

RECITALS:

A. On May 19, 1992, by City of Torrance Ordinance No. 3351, the City granted a pipeline franchise to Mobil for that portion of the M-70 pipeline running along Prairie Avenue in the City of Torrance between 190th Street and the northerly City limits.

B. Pursuant to Ordinance No. 3351, throughput of the M-70 pipeline was capped at 95 Thousand Barrels per Day ("TBPD"), and at 63.5 TBPD if the refinery's crude unit processing inputs exceeded 130 TBPD. These caps were imposed in conformity with the environmental analysis for the M-70 pipeline (Proposed M-70 Pipeline Replacement and System Optimization Project, Final Environmental Impact Report/Statement, SCH No. 89010177). The purpose of the throughput cap linked to the crude unit's processing inputs was to control air emissions from the refinery.

C. Subsequent to the M-70 EIR/EIS, Mobil undertook additional environmental analysis in connection with the reformulated fuels process (Mobil Torrance Refinery Reformulated Fuels Project, Final Environmental Impact Report, SCH No. 93011009). This subsequent environmental analysis considered air quality issues in connection with imposition of reformulated fuels requirements and concluded that no additional air quality impacts will result from sustained crude unit processing of 160 TBPD of crude input.

D. Mobil now wishes to amend Ordinance No. 3351 to increase the crude unit processing cap to 160 TBPD and institute a total refinery input limit, excluding external blending components, to 200 TBPD and apply California State Fire Marshal standards and requirements to the M-70 pipeline operation, with both changes to be consistent with existing environmental assessments and emission limits.

E. At the same time Mobil and the City wish to continue their historic cooperation with respect to the Consent Decree and with respect to other infrastructure improvements in the area of the refinery, including the City's proposed project to extend Del Amo Boulevard from Madrona Avenue to Crenshaw Boulevard (the "Del Amo Project").

C99-100

ORIGINAL COPY

SECTION 2

This ordinance will take effect thirty days after the date of its adoption. Within fifteen days following adoption, this ordinance or a summary of this ordinance, if authorized by the City Council, will be published at least once in the Daily Breeze, a newspaper of general circulation, published and circulated in the City of Torrance.

INTRODUCED AND APPROVED the 18th day of May, 1999.

ADOPTED AND PASSED this 25th day of May, 1999.

/s/ Dee Hardison
Dee Hardison, Mayor

ATTEST:

/s/ Sue Herbers
Sue Herbers, City Clerk

APPROVED AS TO FORM:

JOHN L. FELLOWS III
City Attorney

By: /s/ Ronald T. Pohl
Ronald T. Pohl, Assistant City Attorney

AGREEMENT:

1. City's Obligations.

   A. City agrees to present to the City Council and pursue expeditious adoption of a proposed ordinance amending Ordinance No. 3351 to delete the M-70 pipeline throughput cap and the 130 TBPD annual average crude processing limit on the refinery operation. If adopted, the proposed ordinance would authorize a total maximum average annual input of crude at 160 TBPD and intermediate feedstock for a total not to exceed 200 TBPD, excluding external blend components, and provide the City the authority to approve a 10% increase in the maximum total input upon demonstration by Mobil of no degredation of the refinery environmental, health and safety performance as a result of such increase. Adequate demonstration would require the concurrence of the City Council upon the recommendation of City staff, the Torrance Fire Department, and a third party safety expert acceptable to the City. Mobil will pay the cost of the third party safety expert.

2. Mobil's Obligations With Respect to the M-70 Pipeline.

   A. The operation of the M-70 pipeline will at all times be consistent with State Fire Marshal regulations for pipelines and all other applicable government laws, rules and regulations.

3. Mobil's Obligations With Respect to Refinery Operations.

   A. Mobil will track the refinery's performance relative to environmental, health and safety activities in order to demonstrate that increasing the crude unit input limit does not lead to any degredation of performance as compared to the established operating baseline listed below:

Item	Baseline
• All fires reportable to Torrance Fire Department (Defined as all reportable fires including incidents such as burning paper and smoldering scaffold)	12
• OSHA recordables	17
• OES reportable releases	29
• Confirmed community odor complaints	40

   B. While the proposed 200 TBPD maximum average annual refinery input is based on annual averages and Critical Design Review, each refinery unit will be operated consistent with its demonstrated safety threshold. Any increase in the demonstrated safety threshold must be accomplished as outlined in the Torrance Refinery Safety Advisor Project, Torrance Refinery ("Rate Cap") Increase Report of May 5, 1999, attached as Exhibit A to this Agreement.

C. Mobil will provide a written report to the Torrance Fire Department on a quarterly basis of the refinery's performance against these baseline metrics. If it appears that a degredation of performance has occurred in any quarter, a review by a mutually agreeable third party may be required, at the discretion of the City, to assess the situation and recommend corrective actions. Mobil will pay the cost of the third party review. Further, Mobil will in a timely manner report to the Torrance Fire Department any process upset or other incident that Mobil reasonably believes may have occurred as a result of the increased refinery inputs.

4. Mobil's Obligations With Respect to the Del Amo Project.

A. Mobil will not oppose the efforts of City to extend Del Amo Blvd. from Madrona Avenue to Crenshaw Boulevard, provided all recommendations contained in the Safety Advisor's Del Amo Boulevard Extension Hazard Analysis Report of May 5, 1999, are implemented. A copy of the Safety Advisor's Del Amo Boulevard Extension Hazard Analysis Report of May 5, 1999, is attached as Exhibit B to this Agreement.

B. If the City Council adopts an ordinance amending Ordinance No. 3351, and the ordinance goes into effect without challenge, within fifteen days after the ordinance becomes effective, Mobil will provide City with an irrevocable offer to dedicate a right of way consisting of approximately 39,700 square feet of property. The irrevocable offer will be in the form attached as Exhibit C.

C. Mobil will be responsible for any soil remediation costs associated with the land dedicated by Mobil for the Del Amo Project.

D. If the City Council adopts an ordinance amending Ordinance No. 3351, and the ordinance goes into effect without challenge, within fifteen days after the ordinance becomes effective, Mobil will provide the City with a $3,000,000 irrevocable, unconditional guaranty from the Mobil Corporation, the parent company to the Mobil Oil Corporation. In the event Mobil Corporation ceases to exist, Mobil Corporation will provide a substitute guaranty in the same form from an entity of comparable financial worth acceptable to City or alternate security acceptable to the City. Payment under the guaranty, the guaranty to be in the form attached as Exhibit D, is Mobil's total contribution to the costs associated with the Del Amo Project, including but not limited to the following:

(1) Refinery modifications necessary to clear the right of way for the Del Amo Project. This includes relocation of the railroad spur, an active pipeline, and moving and raising the impacted tank dike. Mobil will not, however, be required to relocate tank 5000X1 or any refinery flare as part of the Del Amo Project.

(2) All risk mitigation, traffic control, and perimeter improvements identified in Exhibit B.

(3) Development of a common truck entrance and exit for Mobil, Dow and BOC to accommodate the Del Amo Project.

E. Funds for the work identified above will be released to City upon presentation by the City of appropriate invoices for covered expenses. In the event the City fails to commence or to complete the Del Amo Project, within two years from the Effective Date of this Agreement, any unexpended portion of the $3,000,000 guaranty will be released to the City. Nothwithstanding the above, should City at any time declare its intent to abandon or place the Del Amo Project on hold, Mobil will release all of the remaining $3,000,000 to City within thirty days of receipt of the City's written request for disbursement. Under either circumstance, $3,000,000 is the total agreed sum Mobil will be required to contribute to the City's infrastructure improvements and refinery modifications as set forth in sections 4.C.(1), (2) and (3), associated with the Del Amo Project.

F. If the City Council adopts an ordinance amending Ordinance No. 3351, as provided under paragraph 1.A. above, and the ordinance goes into effect without being challenged, Mobil will, within fifteen days of the date the ordinance becomes effective, provide City with an additional cash payment, pursuant to the following schedule:

(1) Final Council action prior to June 1, 1999- $2,000,000
(2) Final Council action prior to August 31, 1999- $1,500,000
(3) Final Council action prior to December 1, 1999-$1,000,000

5. Third Party Risk Analysis.
A third party risk analysis has been completed which determines that raising the annual average refinery input limit to 200 TBD, excluding external blend components, is acceptable as long as Mobil complies with all of the mitigation measures contained in Exhibit A.

6. Conflict of Interest.

A. No officer or employee of the City may have any financial interest, direct or indirect, in this Agreement, nor may any officer or employee participate in any decision relating to the Agreement that effects the officer or employee's financial interest or the financial interest of any corporation, partnership or association in which the officer or employee is, directly or indirectly interested, in violation of any law, rule or regulation.

B. No person may offer, give, or agree to give any officer or employee or former officer or employee, nor may any officer or employee solicit, demand, accept, or agree to accept from another person, a gratuity or an offer of employment in connection with any decision, approval,

disapproval, recommendation, preparation or any part of a program requirement or a purchase request, influencing the content of any specification or procurement standard, rendering of advice, investigation, auditing, or in any other advisory capacity in any way pertaining to any program requirement, contract or subcontract, or to any solicitation or proposal.

7. Notice.

A. All notices, requests, demands, or other communications under this Agreement will be in writing. Notice will be sufficiently given for all purposes as follows:

(1) Personal delivery. When personally delivered to the recipient: notice is effective on delivery.

(2) First Class mail. When mailed first class to the last address of the recipient known to the party giving notice: notice is effective three mail delivery days after deposit in an United States Postal Service office or mailbox.

(3) Certified mail. When mailed certified mail, return receipt requested: notice is effective on receipt, if delivery is confirmed by a return receipt.

(4) Overnight delivery. When delivered by an overnight delivery service, charges prepaid or charged to the sender's account: notice is effective on delivery, if delivery is confirmed by the delivery service.

(5) Facsimile transmission. When sent by fax to the last fax number of the recipient known to the party giving notice: notice is effective on receipt. Any notice given by fax will be deemed received on the next business day if it is received after 5:00 p.m. (recipient's time) or on a non-business day.

Addresses for purpose of giving notice are as follows:

Mobil:	Mobil Oil Corporation Torrance Refinery 3700 West 190th Street Torrance, CA 90509-2929 Fax: (310) 212-1887
City:	City Clerk City of Torrance 3031 Torrance Boulevard Torrance, CA 90509-2970 Fax: (310) 618-2931

B. Any correctly addressed notice that is refused, unclaimed, or undeliverable because of an act or omission of the party to be notified, will be deemed effective as of the first date the notice was refused, unclaimed or deemed undeliverable by the postal authorities, messenger or overnight delivery service.

C. Either party may change its address or fax number by giving the other party notice of the change in any manner permitted by this Agreement.

8. Prohibition Against Assignment and Subcontracting.
This Agreement and all exhibits are binding on the heirs, successors, and assigns of the parties. The Agreement may not be assigned or subcontracted by either City or Mobil without the prior written consent of the other. The parties agree the completion of the proposed merger of Exxon and Mobil is not an assignment or subcontracting of which approval of the City is required. In such event, the resulting entity or operator of the Torrance Refinery, if other than Mobil Oil Corporation, will be obligated to perform all Mobil commitments under this Agreement.

9. Integration; Amendment.
This Agreement represents the entire understanding of City and Mobil as to those matters contained in it. No prior oral or written understanding will be of any force or effect with respect to the terms of this Agreement. The Agreement may not be modified or altered except in writing signed by both parties.

10. Interpretation.
The terms of this Agreement should be construed in accordance with the meaning of the language used and should not be construed for or against either party by reason of the authorship of this Agreement or any other rule of construction that might otherwise apply.

11. Severability.
If any part of this Agreement is found to be in conflict with applicable laws, that part will be inoperative, null and void insofar as it is in conflict with any applicable laws, but the remainder of the Agreement will remain in full force and effect.

12. Governing Law; Jurisdiction.
This Agreement will be administered and interpreted under the laws of the State of California. Jurisdiction of any litigation arising from the Agreement will be in Los Angeles County, California.

13. Waiver of Breach.
No delay or omission in the exercise of any right or remedy by a nondefaulting party on any default will impair the right or remedy or be construed as a waiver. A party's consent or approval of any act by the other party requiring the first party's consent or approval will not be deemed to waive or render unnecessary that party's consent to or approval of any subsequent act. Any waiver by either party of any default must be in writing and will not be a waiver of any other default concerning the same or any other provision of this Agreement.

14. Attorney's Fees.
In any dispute, litigation, arbitration, or other proceeding by which one party either seeks to enforce its rights under this Agreement (whether in contract, tort or both) or seeks a declaration of any rights or obligations under this Agreement, the prevailing party will be awarded reasonable attorney's fees, together with any costs and expenses, to resolve the dispute and to enforce any judgment.

15. Exhibits.
All exhibits identified in this Agreement are incorporated into the Agreement by this reference.

16. Mobil's Authority to Execute.
The person(s) executing this Agreement on behalf of Mobil warrant that (i) Mobil is duly organized and existing; (ii) they are duly authorized to execute this Agreement on behalf of Mobil; (iii) by so executing this Agreement, Mobil is formally bound to the provisions of this Agreement; and (iv) the entering into this

Agreement does not violate any provision of any other Agreement to which Mobil is bound.

City of Torrance,
a Municipal Corporation

By: Dee Hardison
Dee Hardison,
Mayor

Mobil Oil Corporation,
a New York corporation

By: Harry A. McVeigh 5/6/99
Harry A. McVeigh
Mobil West Region Manager

ATTEST:

Sue Herbers, City Clerk

APPROVED AS TO FORM:

JOHN L. FELLOWS III
City Attorney

By: Heather K. Whitham
Heather K. Whitham,
Deputy City Attorney

List of Exhibits:

Exhibit A-	Torrance Refinery Safety Advisor Project, Torrance refinery ("Rate Cap") Increase Report of May 5, 1999.
Exhibit B-	Safety Advisor's Del Amo Boulevard Extension Hazard Analysis Report of May 5, 1999
Exhibit C-	Property to be Dedicated
Exhibit D-	Guaranty

Exhibit A

Risk Management Professionals

25108 Marguerite Parkway, Suite B-156, Mission Viejo, California 92692
Phone: 949/859-7475 • FAX: 949/598-0590 • E-mail: info@RMPCorp.com • WWW Site: http://www.RMPCorp.com

May 5, 1999
STM-99-015

Mr. Robert J. Distaso, PE
Mobil Oil Corporation
Torrance Refinery
3700 West 190th Street
Torrance, California 90509-2929

Chief Kennith M. Hall
Battalion Chief
City of Torrance Fire Department
3031 Torrance Boulevard
Torrance, California 90503

TORRANCE REFINERY SAFETY ADVISOR PROJECT
Torrance Refinery ("Rate Cap") Increase
Final Report, Rev. 0
{Public Version}

References:

1) STM-98-044, "Crude Throughput Threshold Increase, Preliminary Draft Report," October 5, 1998.
2) **{CONFIDENTIAL DATA EXCLUDED}**
3) STM-98-061, "Del Amo Boulevard Extension Hazard Analysis," December 29, 1998 (also Rev. 1, May 5, 1999).
4) **{CONFIDENTIAL DATA EXCLUDED}**
5) "Critical Design Review for Crude Unit, Mobil Oil Company, Torrance Refinery," PLG, Warren, February 1999.
6) Distaso, "Engineering Evaluation of the Crude CDR Report," April 5, 1999.
7) Distaso, "Rate Cap Letter STM-99-015," April 27, 1999 e-mail.

Gentlemen:

This letter is offered as a supplement to Ref. 1 and to address recent issues and follow-ups associated with the "Rate Cap" increase proposed by Mobil Oil for the Torrance Refinery. The Safety Advisor was asked to perform a special review of risk and safety issues associated with a proposed total refinery input increase at the Torrance Refinery. Although some evaluation efforts are still pending, the primary purpose of this letter is to provide a platform for closing out key issues and verification/authentication items. It should be noted that the majority of the original SA questions and comments were addressed in Ref. 2.

A) Summary of Key Activities

- Review of Refinery Total Input Limitation Summary Package, 09Sep98, Carolin Keith, Maria Skewis, Dave Allen, Joe Papia, Mo Hakimi, Richard Igercich (reviewed in October 1998)
- Updated "Crude Rate Shifts" - received 30Sep98 (reviewed in October 1998)
- City of Torrance/Mobil Oil Corporation Meetings - 30Sep98
- "Del Amo Boulevard Extension Hazard Analysis," (Ref. 3)
- Review of Ref. 2,4,5,6

B) Description of Key Proposed Changes:

Systems with Relatively Significant Proposed Increases in Unit Input (based on 1998 annual average unit data, unless otherwise identified) (TBD = Thousand Barrels Per Day):
{CONFIDENTIAL DATA EXCLUDED

}
Systems with Relatively Minor Proposed Increases in Unit Input/Output:
{CONFIDENTIAL DATA EXCLUDED

}
Other Changes:

- Increase in Product and Output Quantities (Ref. 1, "Crude Rate Shifts" Table)
- Increase in M-146 Pipeline Throughput (Ref. 1, "Crude Rate Shifts" Table)
- Decrease in Purchased Vacuum Gas Oil (VGO) and Purchased Naphtha (Ref. 1, "Crude Rate Shifts" Table)
- PtR-2 Unit Input Decrease (Ref. 2)

C) Risk/Safety Accepted Bases (repeated from Ref. 1)

a) If a process is operating within its design envelope, it is generally considered safe. This is considered to be a fundamental premise for the conduct of a Process Hazard Analysis. It is difficult to establish a measurable difference (and there is certainly not a direct proportion) between risk of operation at different unit inputs, as long as operating conditions do not exceed unit equipment/system operating limits.

b) There is a general proportionality in risk based on the number of operating days for equipment or groups of equipment (e.g., a refinery unit). For example, all else being equal, 200 operating days for a refinery unit would generally represent approximately double the risk associated with 100 operating days for a refinery unit.

c) Extending a "unit ru. to delay a needed turnaround to perform. ecessary preventive maintenance or repairs can lead to a potentially unsafe condition. However, even under these circumstances, an appropriate margin of safety can be maintained through diligent monitoring and surveillance.

D) Potential Issues Evaluated in Ref. 1

The following topical risk issues/considerations were evaluated in Ref. 1, and open action items were addressed in Section E of this letter ("Response to Specific Follow-up Items Identified in Ref. 1"):

- Pipelines Impacted
- Units Impacted and Throughput
- Unit Operating Days and Turnaround Intervals
- Heater "Firing Rates"
- Sulfur Compound (e.g., H_2S) Production
- Product Transportation
- Feed Transportation
- Mechanical Integrity (MI)
- Process Hazard Analysis (PHA) Assumptions

E) Response to Specific Follow-up Items Identified in Ref. 1

The following risk issues/considerations were addressed in Ref. 2:

1. Refinery H_2S Quantity - The response and approach are reasonable and provide sufficient information to close out the original request.

2. Increased Anhydrous Ammonia Consumption and Truck Deliveries - During the 19Apr99 Meeting, there were a number of potential changes identified for the storage, use, and delivery of anhydrous ammonia during the same time period as the implementation of the proposed rate cap increase. As part of the Torrance Refinery's normal responsibilities and TFD's normal duties, the Torrance Refinery Risk Management Program will be updated to reflect any pertinent changes, and subsequently reviewed by TFD. Thus, no additional action items precipitating from this evaluation are considered necessary.

3. Changes in Alkylation Unit Alkylate Output - The response and information provided are reasonable and provide sufficient information to close out the original request.

4. General Changes in Process Unit Inputs- The information provided was reviewed and recommendations/suggestions made as appropriate. The information provided is sufficient to close out the original request.

5. Unit Operating Days and Turnaround Intervals - The response and information provided are reasonable and provide sufficient information to close out the original request.

6. H_2S Production - The response and information provided are reasonable and provide sufficient information to close out the original request. It should be noted that this reported increase in H_2S Production was anticipated, but needed to be documented as having been evaluated. The key safety consideration is, as appropriately stated by Mobil, "... H_2S capacity or inventory does not change with flowrate...". Thus, any increase in risk to the public and/or Torrance Refinery Personnel cannot be measured (consistent with "Risk/Safety Accepted Basis" 'a' above). It is agreed that the increase in molten sulfur truck loading and transportation (from approximately 14/week to 16.5/week) would not measurably impact risk. The Torrance Refinery should be commended for the planned improvements to the H_2S detection system.

7. Product Transportation - The response and information provided address the original information request. It should be noted that the incremental increase in LPG railcar or LPG truck transportation would precipitate a proportional increase in risk to the public and refinery workers. However, it should be noted that the net total, inherent increase in potential risk to the public is likely negligible. It should also be noted that this increased traffic is consistent with other industrial activities that are generally considered "risk-tolerant" by industry and communities. Ref. 7 identifies the LPG Railcar transportation increase for the proposed total refinery input changes to be from ~110/month to ~115/month, and the increase in LPG Truck traffic to be from ~347/month to ~360/month.

8. Feed Transportation - The response and information provided address the original information request. Similar to the "Product Transportation" issue addressed in Item E7 above, the incremental increase in Isobutane Railcar transportation would precipitate a proportional increase in risk to the public and refinery workers. It should be noted that this risk increase is proportional to the increase in unit output from 22,000 BBl/d to 23,000 BBl/d (~4.5%). It should also be noted that the risk of isobutane transportation is even less than the risk of the transportation of an equivalent quantity of propane (a constituent of LPG), and that the net total, inherent increase in potential risk to the public is likely negligible. It should also be noted that this increased traffic is consistent with other industrial activities that are generally considered "risk-tolerant" by industry and communities.

9. Inadvertent Introduction of Water from Crude Storage Tank Bottoms - The response and information provided are reasonable and provide sufficient information to close out the original request.

F) Close-out of Ref. 1 "Recommended Follow-up Verification/Authentication Activities"

Verify with Crude Unit operations personnel that stripping towers and other vessels will not have operational or level instabilities that could lead to increased hazard potential.

Although this issue was inherently addressed by the evaluation conducted in Ref. 5 for the Crude Unit, Recommendation RC-3 below provides an additional mechanism to ensure that operational stability issues are addressed for all potentially-affected units.

Verify that the following were addressed by the PHA (implicitly or explicitly):

- that additional throughput in the Crude Unit will not lead to reduction in the margin between Desalter Operating Pressures and trip/relief pressure
- that the potential for an inadvertent introduction of water from the Crude Storage Tank bottoms will not increase
- that all increased flow rates (feed, gas to heaters, etc.) are comfortably within the flow limits of control valves without requiring even occasional usage of bypass valves to maintain stable unit operation
- that small differences between operating parameters and trip setpoints will not lead to any measurable increases in nuisance trips (e.g., by soliciting feedback from Operators about what trips have caused difficulties in the past)
- that the following operating parameters for the new unit configuration are within design limits:
    - vessel design pressures
    - heater tube temperatures
    - flow meter operating limits
    - pump Net Positive Suction Head (NPSH) limits (and any other characteristics to preclude cavitation)
    - vessel operating levels and stability
    - knockout drum liquid removal rates
    - overhead accumulator liquid removal rates

With the exception of the se d bullet (addressed in Item E9, above), e issues were satisfactorily addressed in Ref. 5.

On 29Apr99, Mobil provided TFD with a copy of the preliminary report for the PreTreater "PHA Rate Review" and copies of the Torrance Refinery HazOp Studies that provide a basis for the "HazOp Rate" identified in Ref. 2. TFD is currently reviewing these documents and will forward any appropriate comments to Mobil prior to operation of Torrance Refinery process units at the upgraded unit input values.

G) Review of Ref. 5 and Closure of Ref. 5 Findings in Ref. 6

The Critical Design Review for the Torrance Refinery Crude Unit (Ref. 5) appeared thorough and to have addressed key process issues/considerations identified in Ref. 1. Findings appeared reasonable and to have closed-out any key safety/operational issues. It was concluded in Ref. 5 that there were "no safety issues concerned with the operation of the Crude Unit at rates of 160-170 TBD" ... "with regards to offsite impact or public safety." (note that units should not be operated above the "maximum unit capacity safety threshold" - see the discussion in Section I) Although this statement is correct, it should be noted that this refers to direct safety issues, and offsite impact or public safety. Potentially significant operational issues, such as those identified in the study findings, could have an impact on unit stability that could precipitate indirect safety issues. It should also be noted that any increased Crude Unit accident rates, although not likely to affect offsite impact or public safety, could have an effect on Torrance Refinery personnel.

Ref. 6 provided a summary of follow-up efforts performed to address the findings identified in Ref. 5. Ref. 6 appeared generally complete and to have addressed the necessary follow-up efforts. The Ref. 6 responses to Findings #2, #3, #5 are considered adequate (including the suggested use of general monitoring of unit operation and taking corrective actions to re-stabilize unit operation, if needed). Recommendations RC-6 (for Finding #1) and RC-7 (for Findings #6 & #7) are offered to assist in closing out these issues.

The Ref. 6 response to Finding #4 ("Mobil has been aware of this situation") was verified by Mobil on 28Apr99 to mean that Mobil has evaluated the heater parameters with the appropriate implementation of the stated preventive maintenance activities and determined that the heater will be operated within its design basis.

The Ref. 6 response to Finding #8 is considered adequate. Per discussions with Mobil on 28Apr99, Mobil has already completed its engineering assessment of the Kero Cooler (01E-13) and has filed the re-rated specifications for this heat exchanger with the ASME National Board. No additional actions to justify the safety adequacy of this heat exchanger are necessary.

H) Follow-up Activities for Del Amo Boulevard Extension Hazard Analysis (Ref. 4)

The Rev. 0 report for the "Del Amo Boulevard Extension Hazard Analysis" was completed on 29Dec98 (via STM-98-061). This report was updated in May 1999 primarily to address some supplemental concerns that had been raised regarding the Del Amo Boulevard Extension elevated overpass (over the railroad tracks): potential heat flux hazards and potential LPG storage overpressure hazards. Both of these issues were evaluated for the elevated location for motorist, pedestrian, and vehicle impact. Although there could be a minor increase in risk to motorists, pedestrians, or "high profile" vehicles on the elevated overpass on the Del Amo Boulevard Extension (vs. the ground level portion), this increase is not considered significant.

I) Recommendations and Suggestions

Currently, the proposed rate cap agreement between Mobil and the City references an annual total refinery input (of 200 TBD, excluding blend stocks) (Ref. 2). A technical (theoretical) basis for specific unit input targets to maintain safe operation is provided by a "HazOp Rate" that was established by a team knowledgeable in unit operation and design, during a Process Hazard Analysis (PHA). A PHA is a safety evaluation designed to evaluate potential failure scenarios, in order to address the adequacy of existing protection features and to make decisions on the need for installing additional protection features. During a typical PHA, the most appropriate basis for the evaluated "HazOp Rate" is the direct use of Process Flow Diagrams (PFDs) that identify the various process parameters (e.g., pressure, temperature, flow) for the particular "HazOp Rate" being evaluated.

Thus, the "HazOp Rate" provides the basis for a maximum safe rate for unit operation, unless the appropriate application of the Torrance Refinery Management of Change (MOC) Process justifies a higher unit rate (not to exceed the negotiated rate cap with the City of Torrance). It was noted that the "PFD Rate" (i.e., the PFDs available to the HazOp Team) was often lower than the rate evaluated by the HazOp Team. For these cases, although the adequacy of the Process Safety Information available to the HazOp Team (and their resultant conclusions regarding the viability of a larger "HazOp Rate") could be questioned, this is not a practical concern, since a HazOp Team should be able to readily extrapolate and identify small changes to operating parameters.

Typically for a unit:

- A "HazOp Rate" is defined based on the largest unit capacity evaluated during the Process Hazard Analysis (PHA).
- A "Demonstrated Rate" is defined based on safe and stable unit operation - It should be noted that a rate lower than the "HazOp Rate" may need to be established to maintain operational stability, based on challenges that may have been experienced during previous unit operation or testing.
- A "Maximum Unit Capacity Safety Threshold" should be the largest input/output allowed for unit operation, below the smaller of the "HazOp Rate" and the "Demonstrated Rate."

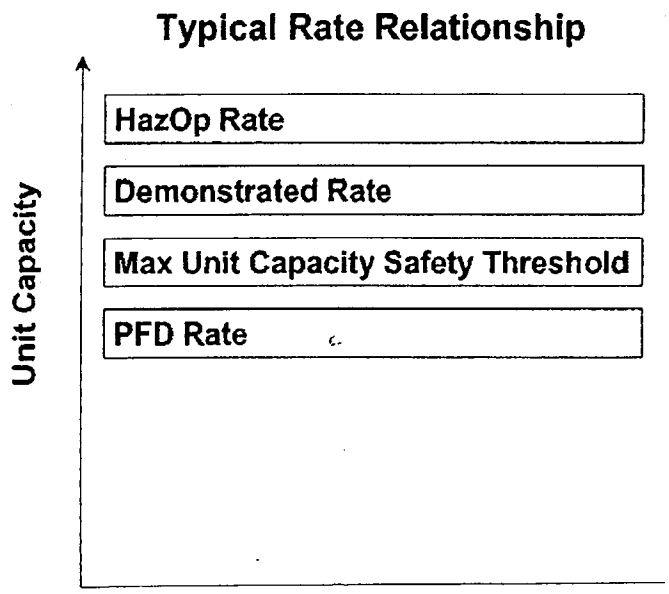

Ideally, the HazOp should h been evaluated at the PFD Rate (i.e., F Rate = HazOp Rate) (see above discussion). Prior to operation at the higher unit capacity, the "Maximum Unit Operating Safety Threshold" should be defined and the 200 TBD operating conditions should be verified to be below this value.

- Recommendation RC-1 is offered to define and provide a control mechanism for maintaining unit operation within a "Maximum Unit Capacity Safety Threshold."
- Recommendation RC-2 is offered to catalyze an update of PFDs to be consistent with the existing HazOp Studies.
- Recommendation RC-3 is offered to provide a basis for establishing a "Demonstrated Rate" based on Operator feedback and controlled testing.

RC-1) Currently, for a particular unit at the Torrance Refinery, operating limits and "consequences of deviation" are identified in the operating procedures, but are not tied to unit input. The Operator uses the monitoring of other process parameters (typically pressure and temperature) to provide a platform for safe unit operation. Based on a 20Apr99 discussion with the Production Coordinator, "KPI (Key Performance Indicator) Targets" are established daily, which include target unit inputs, via interaction with Complex Coordinators, the PLT (Production Line Team), the Long Range Planner, and the Short Range Planner. This interaction occurs during twice-a-month "Assumptions Meetings" where maximum rate targets are primarily based on past successful operating runs. It is informally the responsibility of the Complex Coordinator and the PLT to identify if the KPI Targets exceed any known safety limits.

It could be argued that the sole use of unit pressures and temperatures as operating limits, implicitly ensures that the unit maintains an adequate margin of safety irrespective of the unit input limits that were utilized by the PHA Team for their safety evaluation. Alternately, it could also be argued that operation with unit inputs beyond the PHA Team's evaluation basis could subtlety exceed a limit that was implicitly known and understood by the PHA Team, that was not readily able to be translated into pressure and temperature parameters. A possible example of this is the 15Apr99 event at the Crude Complex, where a high unit input (under highly controlled test conditions) appeared to have resulted in unit instabilities that eventually resulted in a flange leak and subsequent fire.

The primary concern is that for all refinery systems, as the total refinery input is increased, unit stability can potentially decrease. Even if the static process parameters are within operating limits, destabilizing a unit can increase the potential for a dynamic condition that could potentially exceed these operating limits, thus making it potentially less safe. Thus, an important objective is to not only maintain an operating margin of safety that ensures that safety thresholds are not directly exceeded, but that there is a margin of stable operation that ensures that safety thresholds don't have the potential for being exceeded during dynamic conditions.

It is recommended that the "Maximum Unit Capacity Safety Threshold" (smaller of either the "HazOp Rate" or the "Demonstrated Rate") be incorporated into Unit Operating Procedures as an operating limit. Like any other operating limit, unit input flowrates should not be exceeded unless the appropriate application of the Torrance Refinery Management of Change (MOC) Process justifies a higher unit rate (not to exceed the negotiated rate cap with the City of Torrance). In tandem, other mechanisms exist for monitoring an annual average unit and total refinery input (as allowed by agreements between the City and the Torrance Refinery). In addition to sending the annual Summary of Unit Rates to the City Attorney, a copy should be forwarded to the TFD Fire Marshall, with a comparison to allowable unit inputs (possibly provided in a separate column). It should be noted that the need for

establishing a "M num Unit Capacity Safety Threshold d a suitable operating limit in the Unit Operating Procedures, exists now, prior to the establishment of a "Rate Cap" Increase.

RC-2) It should be noted that Mobil is currently planning on updating all Process Flow Diagrams (PFDs) to be consistent with the "HazOp Rate" (above the target 200 TBD Input Case); however, from the above "Description of Key Changes" (Section B), the proposed rate cap increase identifies a relatively significant increase in the input flowrates for the following units, where the "PFD Rate" is measurably lower than Target 200 TBD Rate and/or the "HazOp Rate":

- Crude Unit
- FCC Unit
- Hydrotreater
- CHD Unit (lower priority)
- Pre-Treater
- PtR-1

It is recommended that the above units' PFDs (and/or heat/material balances) are updated prior to operation at the proposed total refinery input target (of 200 TBD, excluding blend stocks). Courtesy copies of these updated PFDs should be provided to TFD (with distribution to the SA at TFD's option). If requested by TFD or Mobil, the SA could verify consistency of these updated PFDs with key design limits and process parameters identified in previous PFDs for these units.

RC-3) Although there are informal mechanisms for the Operator to provide feedback on unit operational stability, it is suggested that prior to operation with higher unit input flowrates, units are tested at the higher 200 TBD Target Total Refinery Input Parameters under very controlled conditions, and feedback regarding unit stability solicited from Operation Staff and formally documented. Documenting this as part of the Torrance Refinery Management of Change (MOC) Process may be one effective mechanism. The smaller of this "Demonstrated Rate" or the "HazOp Rate" would then become the "Maximum Unit Capacity Safety Threshold." Note that the Torrance Refinery PSM or RMP Coordinator should have the responsibility for ensuring that TFD (e.g., Fire Marshall) is notified in a timely fashion prior to testing.

RC-4) It is recommended that Mobil verify that the PSM-MOC process has been completed for all unit rate increases, including the implementation of all critical action items. (carryover from Ref. 1)

RC-5) It is recommended that Mobil verify that the Mechanical Integrity practices and frequencies for equipment in the affected units are adequate for the increased flowrates. (carryover from Ref. 1)

RC-6) Although Ref. 6, Response 1 does address Ref. 5, Finding 1; depending on the extent of the decreased desalting efficiency and increased corrosion rates, the mechanisms identified for corrosion monitoring and Desalter liquid level increase may represent only an interim solution. Thus, during the Safety Advisor's evaluation, it was identified as advisable that, within a period of time (6 months) after the Crude Unit begins to operate at the increased input flowrate (or by 31Dec99), Mobil evaluate the effectiveness of these solutions and document a more complete decision regarding the need for improvements in desalting capacity. During a 03May99 meeting, Mobil committed to this action.

RC-7) Ref. 6, Responses #6 and #7 do address Ref. 5, Findings #6 and #7 ("plugging of vacuum system precondenser causing vacuum system upset" and "possible

undersized vacuu systems necessitating both systems e in operation to maintain the proper tower vacuum"). However, the reduction of crude rate and taking corrective actions, while not a direct potential safety concern, implies a potential for increased frequency of unit upsets and possibly an increased frequency of unstable operation (potential indirect safety concerns). Thus, during the Safety Advisor's evaluation, it was identified as advisable that, within a period of time (6 months) after the vacuum portion of the Crude Unit begins to operate at the increased input flowrate (or by 31Dec99), Mobil qualitatively assess the actual unit reliability impact associated with the operational concerns identified in Ref. 5, Findings #6 and #7, and document an updated position regarding the need for the identified improvements. During a 03May99 meeting, Mobil committed to this action.

J) Summary

Ref. 1 and the above follow-up item discussions provide a sufficient basis for addressing the key issues associated with the risk to the public and to refinery personnel of a proposed total refinery input increase (of 200 TBD, excluding blend stocks) at the Torrance Refinery. In general, primarily since the operating conditions will not exceed unit equipment/system operating limits (Ref. 2) and the number of operating days does not vary, with the implementation of the above recommendations, the types of changes identified by Mobil for the proposed "Rate Cap" Increase are considered to have a non-measurable impact on risk.

As always, your feedback is conducive to creating a quality product and is appreciated.

Please feel free to call regarding any questions or comments.

Sincerely,
Risk Management Professionals, Inc.

Steven T. Maher, PE CSP
Process Safety

Enclosures: *As Noted*

cc: Judge Harry V. Peetris - 2
Dr. Geoffrey D. Kaiser - SAIC

Exhibit B

Risk Management Professionals

25108 Marguerite Parkway, Suite B-156, Mission Viejo, California 92692
Phone: 949/859-7475 • FAX: 949/598-0590 • E-mail: info@RMPCorp.com • WWW Site: http://www.RMPCorp.com

May 5, 1999
STM-98-061, Rev. 1

Mr. Robert J. Distaso, PE
Mobil Oil Corporation
Torrance Refinery
3700 West 190th Street
Torrance, California 90509-2929

Chief Kennith M. Hall
Battalion Chief
City of Torrance Fire Department
3031 Torrance Boulevard
Torrance, California 90503

DEL AMO BOULEVARD EXTENSION HAZARD ANALYSIS

Gentlemen:

Background

The City of Torrance is currently considering the construction of an extension of Del Amo Boulevard along the south property line of the Torrance Refinery. Although a number of logistic and right-of-way issues must be addressed, this evaluation is offered to examine the following safety issues:

- potential heat flux hazards associated with the elevated flares
- potential South Oil Movements LPG Storage Area overpressure and heat flux hazards
- potential hazards associated with proximity of Tank 5000X1 to a public thoroughfare
- traffic control

Objectives

The objectives of this evaluation are to provide a sufficient basis for making the following decisions:

- general acceptability of routing significant vehicle (and possibly pedestrian) traffic flow patterns along the south property line of the Torrance Refinery
- need for relocation of refinery equipment
- choice of street and traffic pattern designs to address potential hazards and preclude the potential for later retrofits

The primary objective is to examine the above potential safety issues and make appropriate decisions now, minimizing the potential for extra work or retrofit at a later time. It is also an objective to establish a platform for addressing these issues that precludes the potential for contentious legal disputes in the future.

It should be noted that safety issues associated with proximity of the Del Amo Extension to the Dow Chemical facility were not evaluated.

Approach

We have chosen a straightforward approach to characterize potential overpressure and thermal hazards associated with events that could potentially impact motorists, pedestrians, or vehicles on the proposed Del Amo Boulevard extension, as well as employees at Able Carbonic and BOC Gases.

This straightforward approach provides a sufficient basis for meeting the above decision-making objectives:

- review calculations already performed by the Torrance Refinery that address many of the issues
- perform select, independent analyses to benchmark Torrance Refinery analyses
- perform additional calculations to provide additional insights for decision-making
- correlate to Consent Decree objectives and tasks to address future potential legal or public issues
- identify key elements that can be used as the basis for establishing a Memorandum of Understanding between the City and Mobil that key safety issues have been addressed (i.e., do not need to be re-investigated) and that the "additional considerations" for street and traffic patterns represent an appropriate basis for addressing potential hazards

A number of simplifying assumptions have been made for this evaluation, and it is recognized that significantly more detailed analyses could be performed (that could sometimes yield less hazardous analysis results); however, this was not considered necessary for addressing the identified decision objectives.

Attachments

The embodiment of the analysis results and details are provided in the following attachments:

A) Analysis Summary - Potential Heat Flux Hazards Associated with the Elevated Flares
B) Briefing Presentation - Potential Heat Flux Hazards Associated with the Elevated Flares
C) Analysis Summary - Potential LPG Storage Overpressure and Heat Flux Hazards
D) Briefing Presentation - Potential LPG Storage Overpressure and Heat Flux Hazards
E) Correlation to Consent Decree Objectives and Tasks
F) Traffic Control Issues and Additional Considerations
G) Key Elements - Potential Memorandum of Understanding
H) Summary of Key Acronyms

General Results and Conclusions

It is clear that the construction of the Del Amo Extension can provide transportation and business advantages to the City of Torrance, and indirectly to Mobil. It can also provide improved emergency responder access to the Torrance Refinery and emergency detour routes for the community, as well as possible additional options for normal truck transportation of products and materials to and from the Torrance Refinery. However, the use of the Del Amo Extension as a public thoroughfare inherently results in a minor increase in the risk to the public as a result of increased proximity to the Torrance Refinery. One of the objectives of this evaluation was to look at the safety issues and elements associated with risk and determining if an adequate margin of public safety is maintained. The following are general results and conclusions of this evaluation:

- The current location of the elevated and ZTOF ground flares is considered acceptable. (Please see Attachment A)
- The current location of equipment in the South Oil Movements LPG Storage Area is considered acceptable. (Please see Attachment C)
- A brief review of key Consent Decree Objectives and Tasks did not identify any additional safety issues associated with the Del Amo Boulevard Extension Project.
- The street and traffic pattern design features identified in Attachment F as "additional considerations" would further improve safety margins for potential hazards associated with the flares and the South Oil Movements LPG Storage Area. In addition, some minor recommendations are identified for Coker Feed Tank 5000X1.

- Based on the aforementioned changes and anticipated traffic patte , the scope of this evaluation and the installation of the identified "additional considerations" are expected to eliminate the need for re-analysis of these issues or further retrofits.

As always, I welcome the City's and Torrance Refinery's comments, concerns, and input, and feel this feedback has a positive impact on the total quality of the effort. I would be pleased to meet with you to discuss, and address any outstanding issues.

As always, please feel free to call regarding any questions or comments.

Sincerely,
Risk Management Professionals, Inc.

Steven T. Maher, PE CSP
Process Safety

Attachments: *As Noted*

References:

1) "Guidelines for Chemical Process Quantitative Risk Analysis," Center for Chemical Process Safety of the American Institute of Chemical Engineers, 1989.
2) "RMP Offsite Consequence Analysis Guidance," U.S. EPA, 24 May 1996.
3) Mobil Torrance Refinery, "Facility Siting Study," Arthur D. Little, Inc., 04 June 1998.
4) Automated Resource for Chemical Hazard Incident Evaluation (ARCHIE), Version 1.00, FEMA, U.S. DOT, U.S. EPA, 1989.
5) "Handbook of Chemical Hazard Analysis Procedures," FEMA, U.S. DOT, U.S. EPA, 1989.
6) Torrance Refinery Safety Advisor Project, "Evaluation of the Emergency Response Program," Final Report, Rev. 0, July 1996.
7) Torrance Refinery Flare System Design Calculations:
    a) Cox, Claude E., "Preliminary Results - Existing Flare Impact on New Propylene Bullets Location," December 10, 1997.
    b) Cox, Claude E., Design Calculations, December 1, 1997.
    c) API Recommended Practice 521, "Guide for Pressure-Relieving and Depressuring Systems," November 1990.
    d) EGS-661, Mobil Engineering Guide, "Pressure Relief and Vapor Depressuring Systems," 1992.
    e) EGS-303, Mobil Engineering Guide, "Recommended Spacing Within Operating Facilities," 1993.
8) STM-98-061, Rev. 0, "Del Amo Boulevard Extension Hazard Analysis," December 29, 1998.
9) Eshbach's Handbook of Engineering Fundamentals, Fourth Edition, 1990.

ATTACHMENT A

ANALYSIS SUMMARY

Potential Heat Flux Hazards Associated with the Elevated Flares

Key Parameters (calculations on following page)

- Flare Location:
  - 460' from fenceline
  - ~ 820 ft (~250m) from a point between the two flares to Able Carbonic and BOC Gases (as extrapolated from Ref. 3, Figure 3)
  - ~1060' horizontal distance between the Del Amo Boulevard Extension elevated overpass (over the railroad tracks) and the closest elevated flare
- Flare Elevation: 200'
- Heat of Combustion: 18,116 BTU/lb (Ref. 7) - This is reasonable for flare gasses, many of which are not flammable hydrocarbons (i.e., they would not contribute to the heat of combustion - a 50 wt% mixture of a non-flammable gas and a 20,000 BTU/lb flammable gas would have a heat of combustion of 10,000 BTU/lb). For comparison, the heat of combustion for many common pure hydrocarbons is provided at the end of Attachment A. This 18,116 BTU/lb heat of combustion value for flare gasses is considered appropriate, and the slightly higher values associated with pure hydrocarbons do not affect the conclusions of this evaluation.
- Release Rates: The values chosen by Mobil for their calculations appeared reasonable and were also used for the Risk Management Professionals Benchmark Calculations.
- Fraction of Heat Radiated from Each Flare: 0.215 (Ref. 7) - This is a reasonable value for this configuration. Although flare gases are calculated to yield 18,116 BTU/lb, only a small portion of this heat would affect an individual on the Del Amo Extension. Implicit in the identified heat radiation fraction are losses due to convective heat transfer to the air around the flare and attenuation/absorption of the heat flux by flare combustion products and air before reaching an individual. The basis for this heat radiation fraction is provided on pages 47 and 51 of Ref. 7d (identifying heat radiation fraction as a function of flare gas composition) and is consistent with the Torrance Refinery flare gas composition. This heat radiation fraction is also consistent with examples used in Ref. 7c.

Simplifying Assumptions that Result in Conservative Results for both Risk Management Professionals and Torrance Refinery Calculations:

- A point heat source was assumed at the 200' elevation. For a flare, much of the radiative heat source is at a higher elevation.

Risk Management Professionals Calculations - Simplifying Assumptions that Result in Slightly More Conservative Results than Torrance Refinery Calculations:

- Wind attenuation was not credited.

Interpretation of Results

- Independent Risk Management Professionals benchmark calculations validate the Torrance Refinery calculations.

- Although the Torrance Refinery results show that for the likely long duration event, a heat flux of ~2 kW/m^2 may result in a time for severe pain of 45 seconds and second degree burns at 187 seconds; it should be noted that this heat flux value does provide a margin of safety:
  - Solar radiation intensity on a clear, hot summer day is about 1 kW/m^2 (320 BTU/hr-ft^2) (Ref. 1, Section 2.3.2.2)
  - A value that "will cause no discomfort for long exposure" is 1.6 kW/m^2. (Ref. 1, Table 2.12)
  - A permissible design level for "any location where personnel are continuously exposed" is 1.58 kW/m^2. (Ref. 1, Table 2.11)
- The calculated heat flux for the portion of the proposed Del Amo Boulevard Extension elevated over the railroad tracks would be at least a factor of 4 less than the potential heat flux for the portion of the proposed Del Amo Boulevard Extension closest to the elevated flare. Thus, the heat flux value at this location for the likely longer-duration event would be less than solar radiation intensity and less than allowable threshold values. Therefore, even for an unprotected individual with a limited ability to find shielding or to take corrective actions, the potential for injury would be minimal.
- The exposure threshold for the EPA's RMP Offsite Consequence Analysis Guidance is 5 kW/m^2. (Ref. 2) Even for peak (non-credible worst-case) scenarios for the closest location to the proposed Del Amo Boulevard Extension, the conservatively-calculated radiant heat flux is only slightly larger than this threshold value.

Additional Information:

- Historical observations from Torrance Refinery flaring events correlate well to the release rates chosen for credible events and not having observed significant ground level hazards.
- One of the more significant events was a 1993 flaring that was associated with a multi-unit power outage that resulted in an event approaching the flare design capacity. Without the tempering benefits of steam injection for ~10 minutes and with some initial release of hydrocarbon liquids, this 30+ minute flaring event resulted in deformation of the black plastic bed liner of a truck parked approximately 150' from the base of the elevated flare. It should be noted that this would be gauged as a 1 in 10 year (or less frequent) type of event.
- Consistent with any refinery, worst-case flaring events (similar to the one identified above) are of relatively short duration. During unit upsets, Operators quickly implement emergency operating procedures to gain control of the unit and minimize the quantity of hydrocarbons directed to the flare.
- In addition to worst-case flaring events being of short duration, the likelihood that it would be during a time where citizens are stationary and in a vulnerable location would be expected to be a minimal risk.
- It should be noted that there are many instances of refineries locating flares in similar proximity to public thoroughfares.
- One of the concerns raised by the City was the potential for liquid hydrocarbons bypassing the flare knockout pots and releasing liquid mists or extinguishing the flare and allowing un-ignited flammable gasses to escape. Although certainly worthy of consideration, even non-credible potential release rates (larger than the ones considered for this evaluation) were considered as part of the flare design basis and would not extinguish the flare. Although liquid droplets have been emitted from the elevated flares during at least one event at the Torrance Refinery, the effects have all been localized, with the droplets precipitating in the near vicinity of the flare.
- Although the flame of the elevated flares is at a higher location (i.e., more distant from the proposed Del Amo Boulevard Extension), the elevated flares have a much greater potential radiant heat output, and are thus the limiting factor when considering potential thermal risks to the public.

Conclusions

- Although it is clear that there is some hazard potential associated with flaring events, the current location of the elevated and ZTOF ground flares is considered acceptable.
- Even though a historical event did result in some deformation of plastic for a fairly long exposure (30+ minutes), the potential hazard to mobile receptors immediately outside of the fenceline, for this type of event, is not considered significant.
- The correlation of the analysis results to specific hazard thresholds does not categorize this as a significant potential off-site hazard. Irrespective of the analysis being based on established methods and API Standards, questions were raised regarding the validity of the analysis results. Although not considered necessary, at Mobil's option, a flare test could be conducted using a known (or estimated) flowrate that is significantly less than the maximum flare capacity. The results could be extrapolated to identify potential ground-level heat fluxes.
- Another issue raised during the course of this evaluation was a potential for increased public proximity resulting in increased visibility of the elevated flares, and possibly an increase in the public's perception of risk contributed by the Torrance Refinery. These risk perception issues could also result in an increase in Community "odor" complaints. Although this is certainly a possibility, the current prevalent wind directions are parallel to the Del Amo Boulevard Extension. Thus, there is no measurable increased potential for the progression of odors onto public thoroughfares. Then, as now, this would represent more of a concern for Crenshaw Boulevard motorists and pedestrians. Therefore, this is not an issue for the Del Amo Boulevard Extension Project.
- Similarly, since the distances are greater, the current location of the elevated and ZTOF ground flares would not represent a significant hazard to Able Carbonic and BOC Gases employees.
- It should be noted that the calculated hazard values are associated with stationary, unshielded receptors, at the closest fenceline point. For a pedestrian that can proceed with caution away from the general area, and for a vehicle passenger that is partially shielded by the vehicle and windows, the potential hazard is even lower.
- Implementation of street and traffic pattern design features that minimize the occurrence and duration of pedestrians and vehicles in the areas closest to the flares would further improve safety margins for potential hazards associated with the flares.

ATTACHMENT A (continued)

Calculations Performed by Torrance Refinery:

Elevated Flare Capacity, lb/hr

Each	1,900,000
Total	3,800,000

Worse Case Scenario - Total Power Failure w/ all Units down indefinitely

	lb/hr	BTU/hr-ft2	
Peak	2,700,000	2,800	
Average	2,000,000	2,100	
Max. duration	**675,000**	**700**	***Likely Longer-Duration Event***

Thermal Radiation Thresholds

Time for Severe Pain (sec)	Time for 2nd deg Burn (sec)	kW/m2	BTU/hr-ft2	
45	**187**	**2**	**600**	***Likely Longer-Duration Event***
13	40	5	1,600	
7	20	8	2,500	
4	11	12	3,800	

Notes: (Torrance Refinery)
1. Using 7 mph historical wind velocity
2. Flares are 460' from south fenceline
3. South property fenceline data @ ground level
4. Risk to slow moving vehicles or pedestrians
5. Risk considered much less than a toxic release

Calculations Performed by Risk Management Professionals:

Rel. Rates lbm/hr	BTU/lbm	BTU/hr	Area (ft2)	BTU/hr-ft2	kW/m2
2,700,000	18,116	4.89E+10	3,161,699	3326.2	10.5
2,000,000	18,116	3.62E+10	3,161,699	2463.8	7.8
675,000	18,116	1.22E+10	3,161,699	831.5	2.6

Supporting Calculations:

Distance (line of sight, ground & elevation)	501.60 feet
Total Impact Area @ Distance	3,161,699 sq. ft.
Fraction of Heat Radiated from Flare	0.215

Select Heats of Combustion (Ref. 2)

	kJ/kg	BTU/lbm
Butane	45,719	19,677
Ethane	47,509	20,447
Methane	50,029	21,532
Pentane	44,697	19,237
Propane	46,333	19,941

ATTACHMENT B

BRIEFING PRESENTATION

Potential Heat Flux Hazards Associated with the Elevated Flares

General results and conclusions of the Hazard Analysis are included in Attachment D.

05-May-99

Del Amo Boulevard Extension Hazard Analysis

Prepared for:

Torrance City Council

January 5, 1999

By:

[To Be Determined]

1

Risk Management Professionals
A Member of RMP Services Partnership

Key Safety Issues Addressed

- Potential heat flux hazards associated with the elevated flares
- Potential South Oil Movements LPG Storage Area overpressure and heat flux hazards
- Potential hazards associated with proximity of Tank 5000X1 to a public thoroughfare
- Traffic control

2

Risk Management Professionals
A Member of RMP Services Partnership

Objective - Decision-Making

- General acceptability of routing significant vehicle (and possibly pedestrian) traffic flow patterns along the south property line of the Torrance Refinery
- Need for relocation of refinery equipment
- Choice of street and traffic pattern designs to address potential hazards

3

Risk Management Professionals
A Member of RMP Services Partnership

Potential Heat Flux Hazards Associated with the Elevated Flares

- General Elevated Flare Characteristics
  - Location = 460' from fenceline
  - Elevation = 200'

4

Risk Management Professionals
A Member of RMP Services Partnership

Potential Heat Flux Hazards Associated with the Elevated Flares
(continued)

- Results
  - Mobil and Risk Management Professionals calculations yield the same conclusions.
  - The "likely longer-duration event" can yield a heat flux of ~2 kW/m^2 (comparison - solar radiation on a clear, hot summer day is about 1 kW/m^2 and a value that "will cause no discomfort for long exposure" is 1.6 kW/m^2).
  - Even for peak (non-credible worst-case) scenarios, the conservatively calculated radiant heat flux is only slightly larger than the EPA's threshold of 5 kW/m^2.

5

Risk Management Professionals
A Member of RMP Services Partnership

Potential Heat Flux Hazards Associated with the Elevated Flares
(continued)

- Results (continued)
  - Worst-case flaring events are of short duration. During unit upsets, Operators quickly implement emergency operating procedures to gain control of the unit and minimize the quantity of hydrocarbons directed to the flare.
  - In addition to worst-case flaring events being of short duration, the likelihood that it would be during a time where citizens are stationary and in a vulnerable location is minimal.

6

Risk Management Professionals
A Member of RMP Services Partnership

Potential Heat Flux Hazards Associated with the Elevated Flares
(continued)

- Conclusions
  - Current location of the elevated and ZTOF ground flares is considered acceptable.
  - Correlating analysis results to specific hazard thresholds does not identify this as a significant potential off-site hazard.
  - Note that calculated hazard values are for stationary, unshielded receptors, at the closest fenceline point. For a typical pedestrian and motorist, the potential hazard is lower.
  - Implementation of street and traffic pattern design feature recommendations will further reduce the potential hazard.

7

Risk Management Professionals
A Member of RMP Services Partnership

ATTACHMENT C

ANALYSIS SUMMARY

Potential LPG Storage Overpressure and Heat Flux Hazards

Key Parameters (calculations on following page)

- South Oil Movements LPG Storage Hazard Characterization Locations:
  - Tank 28X19 ~ 853 ft (~260m) from fenceline (as extrapolated from Ref. 3, Figure 3)
  - Tank 50X130 ~ 1099 ft (~335m) from fenceline (as extrapolated from Ref. 3, Figure 3)
- Materials and Quantities of Interest:
  - Tank 28X19 - propane - ~2700 barrels (~113,400 gallons)
  - Tank 50X130 - n-butane - ~5000 barrels (~210,000 gallons)

Simplifying Assumptions that Result in Conservative Results for both Risk Management Professionals and Torrance Refinery Calculations:

- An Unconfined Vapor Cloud Explosion (UVCE) is assumed to occur following the ignition of a release of propane or butane gases from the South Oil Movements LPG Storage Area, even through the most likely event is a deflagration. The following is a quote from Section 10 of Ref. 2:

  > "For a vapor cloud explosion to occur, rapid release of a large quantity, turbulent conditions (caused by a turbulent release or congested conditions in the area of the release, or both), and other factors are generally necessary. Vapor cloud explosions generally are considered unlikely events ... A vapor cloud deflagration, involving lower flame speeds than a detonation and resulting in less damaging blast effects, is more likely than a detonation."
- The above is consistent with considerations of the likelihood for UVCE in Ref. 3, where it was emphasized that a vapor cloud fire/flame jet is a more likely outcome for those cases where there is a limited confinement/congestion, for example, with high pressure storage vessels and railcar loading operations.
- From Ref. 2: For a worst-case scenario, the "total quantity of the flammable substance is assumed to form a vapor cloud within the upper and lower flammability limits, and the cloud is assumed to detonate".
- From Ref. 2, Section 12.4: For a worst-case scenario, "10 percent of the flammable vapor in the cloud is assumed to participate in the explosion." Typical VCE yield factors are 3 %.
- From Ref. 2, Basis for 1 psig Overpressure Threshold: "An overpressure of 1 psi may cause partial demolition of houses, which can result in serious injuries to people, and shattering of glass windows, which may cause skin laceration from flying glass."
- From Ref. 2: "The method presented here for analysis of vapor cloud explosions is based on a TNT-equivalent model."

Interpretation of Results

- Independent Risk Management Professionals benchmark calculations validate the Torrance Refinery calculations.
- Ref. 3, Figure 3 identified a ~1475' (~450m) distance to a 1 psig overpressure for the South Oil Movements LPG Storage Area for a credible release scenario (2" diameter breach for 10 minutes followed by ignition with a 100% yield factor for the total flammable mass within the LFL envelope).

- The Risk Managemen[illegible] ofessionals RMP worst-case scenario c[illegible] ations (entire tank quantity with a 3% yield factor) identified:
  - Tank 28X19 ~2370' (~722m)
  - Tank 50X130 ~2910' (~887m)

  and for an UVCE event resulting from a 2" diameter breach over 10 minutes identified:
  - Tank 28X19 ~1050' (~320m) (slightly past the fenceline)
  - Tank 50X130 ~730' (~222m) (within the fenceline)

  It should be noted that worst-case results for a 10% yield factor are also calculated, consistent with RMP requirements, but considered extremely conservative and not as helpful for decision-making.
- Risk Management Professionals also performed a separate calculation of the quantity of material released (based on a 2" diameter breach for 10 minutes) and applied a 100% yield factor to the quantity of material below the LFL. The results are sufficiently close to the Ref. 3 results to also validate the use of Ref. 3 results for decision-making.
- Thus, the Risk Management Professionals benchmark calculations validate the general results calculated by the Torrance Refinery calculations presented in Ref. 3, and Ref. 3 may be used as a decision-making tool for safety issues associated with impacts on the Del Amo Boulevard Extension. Again, it should be noted that the assumption that a release and ignition results in an UVCE is extremely conservative.
- Although the RMP Worst-Case Calculations do provide salient information, consistent with the philosophy used for RMPP in determining "worst-case credible release scenarios", RMP alternative release scenarios (and not worst-case calculations) should be used as the basis for making meaningful decisions with respect to emergency response planning. Thus, the basis for the calculations performed in Ref. 3 (including the use of more representative atmospheric stability classes, e.g., "D") is appropriate for characterizing potential overpressure hazards for the Del Amo Extension. It should be noted that benchmark calculations performed by both the City and Mobil for "D" and "F" Stability Classes were reported to have identified only minor differences in the dispersion modeling results.
- Ref. 1 identifies the following "relevant explosion damage thresholds for residential type building":
  - Heavy building damage (5 psig)
  - Repairable building damage (1.5 psig)
  - Glass damage to buildings (0.7 psig)
  - 10% of glass broken (0.3 psig)
- Ref. 1, Table 2.13 further elaborates on "Damage Produced by Blast":
  - 0.03 psig - Occasional breaking of large glass windows already under strain
  - 0.04 psig - Loud noise (143 dB), sonic boom glass failure
  - 0.1 psig - Breakage of small windows under strain
  - 0.15 psig - Typical pressure for glass breakage
  - 0.3 psig - "Safe distance" (probability 0.95 no serious damage beyond this value); projectile limit; some damage to house ceilings; 10% window glass broken
  - 0.4 psig - Limited minor structural damage
  - 0.5-1.0 psig - Large and small windows usually shattered; occasional damage to window frames
  - 0.7 psig - Minor damage to house structures
  - 1.0 psig - Partial demolition of houses, made uninhabitable
  - 1-2 psig - Corrugated asbestos shattered; corrugated steel or aluminum panels, fastenings fail, followed by buckling; wood panels (standard housing) fastenings fail, panels blown in
  - 1.3 psig - Steel frame of clad building slightly distorted
  - 2 psig - Partial collapse of walls and roofs of houses
  - 2-3 psig - Concrete or cinder block walls, not reinforced, shattered
  - 2.3 psig - Lower limit of serious structural damage
  - 2.5 psig - 50% destruction of brickwork of houses

- 3 psig - Heavy m. . .nes (3000 lb) in industrial building suffe little damage; steel frame building distorted and pulled away from foundations
- 3-4 psig - Frameless, self-framing steel panel building demolished; rupture of oil storage tanks
- 4 psig - Cladding of light industrial buildings ruptured
- 5 psig - Wooden utility poles snapped; tall hydraulic press (40,000 lb) in building slightly damaged

- Ref. 5, Table 5.1 identifies:
  - 1.0-8.0 psig - Range for slight to serious injuries due to skin lacerations from flying glass and other missiles
  - 2.4-12.2 psig - Range for 1-90% eardrum rupture among exposed populations
  - 14.5-29.0 psig - Range for 1-99% fatalities among exposed populations due to direct blast effects
- It should be noted that a 1.0 psig overpressure value for pedestrians and motorists is at the lowest end of the above personal injury scale.
- Specific data on vehicle effects was not identified in Ref. 1; however, it should be noted that, for pedestrians, overpressure levels greater than 15 psig "are necessary to produce fatality (primarily due to lung hemorrhage)".
- The impact threshold for the EPA's RMP Offsite Consequence Analysis Guidance is 1 psig. (Ref. 2) For credible worst-case scenarios, the conservatively-calculated overpressure at the fenceline is only slightly larger than this threshold value.
- Ref. 3 identified calculated overpressures > 1.5 psig for ~1240' (~378m) along the fenceline, > 1.0 psig for ~2280' (695m) along the fenceline, and ~1.5 psig at the Del Amo Boulevard Extension overpass (over the railroad tracks). Since the Risk Management Professionals benchmark calculations identified overpressures that were slightly lower than those reported by Ref. 3, it is quite possible that actual overpressure values (even in the unlikely event of an UVCE) would be less then those reported by Ref. 3.
- Thus, for decision-making, the fenceline overpressure results should be considered as either nearly equal to or slightly larger than the RMP threshold value of 1 psig. This consequence is associated with a hydrocarbon release event that is unlikely, coupled with an unlikely transition from a deflagration to an UVCE.
- Additional questions had been raised with respect to "high profile" vehicles and the absence of some of the potential ground level attenuation effects for motorists, pedestrians, or vehicles located on the elevated portion of the Del Amo Boulevard Extension.
  - "High Profile" Vehicles - Vehicle damage on nearby streets is typically not the primary issue when considering blast overpressure, as evidenced by the lack of vehicular damages identified in the above list of "damage produced by blast" and the difficulty locating information about this potential effect in literature. The primary damage mechanisms of concern for vehicles are surface damage due to the rapid impulse of the overpressure and possible deflection of the vehicle due to the force on the side of the vehicle. Surface damage is characterized as superficial, as identified in the "damage produced by blast" list above. Significant vehicle deflection would not be expected due to the short duration of the overpressure impulse.
  - Ground Attenuation - Since no specific ground attenuation assumptions were made in the calculations performed in Ref. 3, there would be no specific differences in the calculated potential impact on the elevated portion of the Del Amo Boulevard Extension vs. the ground level portion. In addition, the overpass area (over the railroad tracks) is partially shielded from overpressure effects by Coker Feed Tank 5000X1.
  - It should also be noted that although the calculated overpressure at the Del Amo Boulevard Extension overpass area is 1.5 psig (Ref. 3, Figure 3), the portions of Crenshaw Boulevard and Prairie Avenue closest to the refinery have calculated potential overpressures measurably larger. Thus, traffic on the Del Amo Boulevard Extension would not measurably add to the total risk to the public, and if the Del Amo Boulevard

Extension resul ı any decrease in the traffic volumes in f e sections of Crenshaw Boulevard and Prairie Avenue, the total risk to the public could potentially decrease.

Additional Information:

- It should be noted that there are a number of inherent uncertainties associated with the use of overpressure and damage levels that are "well established for TNT", to unconfined vapor cloud explosions involving hydrocarbons. Ref. 1 provides some detailed background information identifying some of the inherent uncertainties associated with the models and thresholds used.
- For comparison purposes, a vapor cloud fire hazard was calculated using ARCHIE (Ref. 4) and the parameters identified on the following calculation sheet summary. The calculated maximum hazard distance associated with the vapor cloud fire (741') was less than the calculated hazard distance for a UCVE for the worst-case analysis (2370') and the UCVE alternative release scenario (1053'). Thus, for events associated with the South Oil Movements LPG Storage, overpressure hazards are a more important issue than thermal radiation hazards. This phenomenon was also discussed in Ref. 3: "Fire hazards from high pressure process units and storage vessels would most likely occur whenever a release disperses as a high pressure jet. In this case, the release would undergo rapid dilution with air, and ignition would more likely result in a flame jet rather than an explosion. In this case, the thermal radiation hazard distance would be much shorter than the VCE overpressure distance." Although Ref. 3 inadvertently cited two different gas evolution rates to achieve the same flammable mass of 742 kg, for our comparison calculations, the largest (most conservative) of the two rates (11.3 kg/s) was used.
- It should be noted that another potential scenario implicitly addressed by this evaluation is a release of flammable hydrocarbons that remains unignited until reaching a potential ignition source on the proposed Del Amo Boulevard Extension. This type of event for the South Oil Movements LPG Storage Area was considered by the Safety Advisor in the Chemical Monitoring/Warning Systems and Emergency Response Program evaluations (for potential impact on Crenshaw Boulevard). For the proposed Del Amo Boulevard Extension, prevalent wind directions favor the minimization of risk, and recommendations in Attachment F are offered to further lower the risk associated with this potential hazard. It should also be noted that the location of the Del Amo Boulevard Extension overpass (on the railroad tracks) is southwest of the South Oil Movements LPG Storage Area (i.e., typically upwind or crosswind).

Conclusions

- From an analytical perspective, the potential overpressure results should be considered as either nearly equal to or slightly larger than the RMP threshold value of a 1 psig overpressure along significant portions of the southern fenceline. Even though potentially marginally acceptable by RMP criteria, it should be noted that injuries could still occur as a result of any one of a number of effects resulting from an unlikely UVCE in the South Oil Movements LPG Storage Area, e.g.:
  - Projectile injuries
  - Traffic accidents resulting from driver confusion due to noise, light, and overpressure
- Therefore, although the consequences of the potential hazard are marginally acceptable, other issues that would tend to minimize risk to the public on the Del Amo Boulevard Extension should also be noted:
  - A release of this magnitude in the South Oil Movements LPG Storage Area is credible, but unlikely.
  - Even if a release were to occur, it is not likely to transition from deflagration to an UVCE.
  - Prevalent wind directions parallel the Del Amo Boulevard Extension.
- Thus, whereas the correlation of the analysis results to specific hazard thresholds does not categorize this as a significant potential off-site hazard (and risk is considered minimal), the potential impact on the Del Amo Boulevard Extension should not be ignored:

- Implementation of street and traffic pattern design features that minimize the occurrence and duration of pedestrians and vehicles in the areas closest to the South Oil Movements LPG Storage Area would further improve safety margins for potential hazards.
- An increased frequency of testing & inspection intervals and installation of ambient hydrocarbon detectors on the south perimeter of the South Oil Movements LPG Storage Area would further lower the risk associated with these potential hazards.

- Although there could be a minor increase in risk to motorists, pedestrians, or "high profile" vehicles on the elevated overpass on the Del Amo Boulevard Extension (vs. the ground level portion), this increase is not considered significant.

ATTACHMENT C (continued)

Calculations Performed by Risk Management Professionals:

Key Distances of Interest:

	(m)	(ft)
Tank 28X19	260	853.1
Tank 50X130	335	1099.1

RMP Worst-Case Analysis (RMP OCA Guidance - TNT Equivalent Model)

Substance	Barrels	Gallons	Sp. Grav.	Mt(lbm)	Distances to 1 psi OverP (m)	(ft)
Propane (28X19)	2700	113,400	0.601	568,476	1079.2	3540.8
N-Butane (50X130)	5000	210,000	0.6	1,050,982	1318.6	4326.4

RMP Worst-Case Analysis (RMP OCA Guidance - TNT Equivalent Model) (with a more credible 3% yield factor):

Substance	Barrels	Gallons	Sp. Grav.	Mt(lbm)	Distances to 1 psi OverP (m)	(ft)
Propane (28X19)	2700	113,400	0.601	568,476	722.4	2370.3
N-Butane (50X130)	5000	210,000	0.6	1,050,982	886.7	2909.2

RMP Alternative Release Scenario (2" Release for 10 minutes) Analysis (RMP OCA Guidance - TNT Equivalent Model) (with more credible 3% yield factor applied to the total amount of material released)

Substance	Release Rate (kg/s)	Mt(lbm)	Distances to 1 psi OverP (m)	(ft)
Propane (28X19)	11.3	14,934	320.8	1052.6
N-Butane (50X130)	3.8	5,022	222.1	728.7

RMP Flammable Vapor Cloud Effect Calculations (ARCHIE, Version 1.00)

Key Parameters:

Substance:	Propane	
Molecular Weight:	44.1	
Normal Boiling Point:	-44 F	
Heat of Combustion:	19941 BTU/lbm	
Wind Speed:	1.5 m/s	3.36 m.p.h
Gas Evolution Rate:	11.3 kg/s	1493.39 lbm/min
Atmospheric Stability:	F	
Material Release Temperature:	70 F	
Ambient Air Temperature:	90 F	
LFL	2.1 %	
UFL	9.5 %	
Gas Release Time:	10 minutes	
Results (max. weight of explosive gas):	3739 lbm	
Results (maximum hazard distance to LFL):	741 feet	

RMP TNT Equivalent Model for 100% Yield Factor for All Material Within Flammability Limits)

Basis	Mt(lbm) (within LFL)	Distances to 1 psi OverP (m)	(ft)
ARCHIE	3,739	435.6	1429.3

Ref. 3 (Table 3)	1,634	330.6	1084.7	

Note larger distances were used in the overpressure zones of Ref. 3, Fig. 3 to account for credible wind conditions. For example, the sum of the distance to LFL together with the overpressure distance for the 1634# release is 439m for a 1 psig overpressure.

Correlation Calculations

RMP Worst-Case Propane Overpressure Calculations (POTW Guidebook)

Substance	Barrels	Gallons	Sp. Grav.	Mt(lbm)	Distances to 1 psi OverP (ft)
Propane (28X19)	2700	113,400	0.601	568,476	3504.1

RMP Worst-Case Propane Overpressure Calculations (RMP*Comp)

Key Parameters:

Substance:	Propane (liquefied)	
Quantity:	568,476 lbm	
Endpoint:	1 psi	
Calculation Results:	0.67 miles =	3537.6 feet

RMP Worst-Case Propane Overpressure (UVCE) Calculations (ARCHIE, Version 1.00)

Key Parameters:

Substance:	Propane	
Quantity:	568,476 lbm	
Yield Factor:	0.03	
Heat of Combustion:	19941 BTU/lbm	
UCVE Height:	ground level	
Wind Speed	1.5 m/s	3.3556 m.p.h
Gas Evolution Rate	11.3 kg/s	1493.392 lbm/min

Results (distance to 1 psig overpressure): 2310 feet

Note that this is lower than the RMP Worst-Case Analysis results.

ATTACHMENT D

BRIEFING PRESENTATION

Potential LPG Storage Overpressure and Heat Flux Hazards

Potential LPG Storage Overpressure and Heat Flux Hazards

- South Oil Movements LPG Storage Hazard Characterization Locations
  - Tank 28X19 - Propane - 113,400 gallons - ~853' from fenceline
  - Tank 50X130 - n-Butane - 210,000 gallons - ~1099' from fenceline

Potential LPG Storage Overpressure and Heat Flux Hazards (continued)

- Calculation Conservatisms
  - Although considered very unlikely, an Unconfined Vapor Cloud Explosion (UVCE) is assumed to result from a release. Even if ignition occurs, a less-dangerous "vapor cloud fire" is more likely.
  - Calculations used the older and more conservative TNT-equivalency method specified by the U.S. EPA.
  - Unrealistically high yield factors of 10% are used for the worst-case analysis.
  - The 1 psig overpressure threshold specified by the EPA is lower than values typically associated with severe injury.

Potential LPG Storage Overpressure and Heat Flux Hazards
(continued)

- Calculations Performed by Risk Management Professionals
  - RMP Worst-Case (EPA Guidance w/10% yield factor)
  - RMP Worst-Case (EPA Guidance w/more credible 3% yield factor)
  - RMP Alternative Release Scenario (EPA Guidance)
  - RMP Flammable Vapor Cloud Effect Calculations (ARCHIE)
  - RMP Worst-Case Propane (POTW Guidebook)
  - RMP Worst-Case Propane (RMP*Comp)
  - RMP Worst-Case Propane (ARCHIE, UCVE Assumptions)

10

Risk Management Professionals
A Member of RMP Services Partnership

Potential LPG Storage Overpressure and Heat Flux Hazards
(continued)

- Results
  - Risk Management Professionals calculations validate the Torrance Refinery calculations & yield the same conclusions.
  - Thus, the following results may be used to characterize the hazard for decision-making:
    - South Oil Movements LPG Storage Area 1 psig overpressure distance = 1475'
    - Fenceline length with overpressure > 1 psig = 2280'
    - Fenceline length with overpressure > 1.5 psig = 1240'

11

Risk Management Professionals
A Member of RMP Services Partnership

Potential LPG Storage Overpressure and Heat Flux Hazards
(continued)

- Results (continued)
  - Thus, for decision-making, the fenceline overpressure results should be considered as either nearly equal to or slightly larger than the RMP threshold value of 1 psig.
  - Another type of hazard associated with the flare being overloaded and releasing unburned hydrocarbons was evaluated, but considered non-credible.

Potential LPG Storage Overpressure and Heat Flux Hazards
(continued)

- Conclusions
  - Although the consequences of the potential hazards are considered marginally acceptable, this is balanced by other characteristics that minimize risk:
    - A release of this magnitude in the South Oil Movements LPG Storage Area is credible, but unlikely.
    - Even if a release were to occur, it is not likely to transition from deflagration to an UVCE.
    - Prevalent wind directions parallel the Del Amo Boulevard Extension.

Potential LPG Storage Overpressure and Heat Flux Hazards
(continued)

- Conclusions (continued)
  - Implementation of street and traffic pattern design feature recommendations will further reduce the potential hazards.
  - An increased frequency of testing & inspection intervals and installation of ambient hydrocarbon detectors on the south perimeter of the South Oil Movements LPG Storage Area would further lower the risk associated with these potential hazards.

Risk Management Professionals
A Member of RMP Services Partnership

General Results and Conclusions of the Hazard Analysis

- The current location of the elevated and ZTOF ground flares is considered acceptable.
- The current location of equipment in the South Oil Movements LPG Storage Area is considered acceptable.
- A brief review of key Consent Decree Objectives and Tasks did not identify any additional safety issues associated with the Del Amo Boulevard Extension Project.

Risk Management Professionals
A Member of RMP Services Partnership

General Results and Conclusions of the Hazard Analysis
(continued)

- Attachment F of the Summary Report reviews Traffic Control Issues and provides additional considerations, categorized as follows.
  - Traffic Control
  - Further Minimizing the Potential for a Hydrocarbon Release from the South Oil Movements LPG Storage Area
  - Characterization of Overpressure Effects
  - Coker Feed Tank 5000X1
  - Refinery Perimeter Improvements

16

Risk Management Professionals
A Member of RMP Services Partnership

ATTACHMENT E

CORRELATION TO CONSENT DECREE OBJECTIVES AND TASKS

The following is a brief summary of potential impacts to the previous Safety Advisor evaluations:

8(a) Chemical Monitoring/Warning Systems - As identified in Attachments C & F, installation of detection and warning systems for high ambient concentrations of hydrocarbons at the south perimeter of the South Oil Movements LPG Storage Area is a consideration for improvement.

8(b) Television Monitoring Systems - The current installation of television monitoring systems includes a camera permanently trained on the flares and a monitor in the Central Control Room. This installation was identified in the Safety Advisor's report and is considered adequate for remote monitoring of flare activity. No impact to the results or conclusions of the Safety Advisor evaluation are identified.

8(c) "Refinery Perimeter Improvement" - Refinery perimeter characteristics are likely to be impacted by the Del Amo Extension, and additional considerations are identified in Attachment F.

8(d) "Refinery Fire Water System" - The Fire Water System, capacities, and adequacy for the subject locations had been explicitly evaluated by the Safety Advisor and have not changed. No impact to the results or conclusions of the Safety Advisor evaluation are identified.

8(e) "Refinery Fire Fighting Capabilities and Procedures" - Fire fighting capabilities and procedures for addressing fires in the subject locations had been explicitly evaluated by the Safety Advisor and have not changed. No impact to the results or conclusions of the Safety Advisor evaluation are identified.

8(f) "Emergency Response Program" - The emergency response requirements and program for the subject areas had been explicitly evaluated by the Safety Advisor and have not changed. No impact to the results or conclusions of the Safety Advisor evaluation are identified.

8(g) Environmental and Safety, Practices and Procedures - No impact to the results or conclusions of the Safety Advisor evaluation are identified.

8(h) Audit Procedures - No impact to the results or conclusions of the Safety Advisor evaluation are identified.

8(i) Safety Training - No impact to the results or conclusions of the Safety Advisor evaluation are identified.

8(j) Safety Programs for the Handling of Hazardous Materials and Substances - No impact to the results or conclusions of the Safety Advisor evaluation are identified.

8(k) Seismic Safety - The equipment in the subject areas had been explicitly evaluated by the Safety Advisor and have not changed. No impact to the results or conclusions of the Safety Advisor evaluation are identified.

8(I) Traffic Control Sys .s - Traffic control systems would clearly impacted by the Del Amo Extension and are a key topic in Attachments F & G.

4) Use of Modified HF Catalyst - No impact to the results or conclusions of the Safety Advisor evaluation are identified.

ATTACHMENT F

TRAFFIC CONTROL ISSUES AND ADDITIONAL CONSIDERATIONS

Traffic Control

Traffic control is a key issue with respect to maintaining an adequate margin of public safety. It is clear that the Del Amo Extension would provide increased public proximity, and with that, increased risk. Sensible traffic control measures should be implemented now, during the planning and design phase, to anticipate and address potential traffic control issues. The following items may be worthy of consideration:

- One of the best mechanisms to identify potential issues and generate helpful ideas is through direct interaction between Mobil and City of Torrance Personnel. Consider holding a ~2 hour meeting to qualitatively address potential issues associated with precautions and safeguards for the public that can be best addressed during the planning and design phase. Unless additional analysis is considered necessary, with the appropriate representatives at the meeting, an adequate forum for decision-making should enable the meeting results to be used as a platform for making final decisions with respect to design features to be implemented. Responsibilities for implementation should also be readily identifiable.

- Consider installing no loitering signs along the Torrance Refinery south fenceline.

- Consider not installing a sidewalk on the Torrance Refinery side of the Del Amo Extension, to provide additional distance between potential thermal or overpressure sources and pedestrians.

- To further minimize any potential hazard, consider designing the eastbound traffic flow, so that even during rush hour, traffic is not backed up and "stalled" at the point closest to the elevated flares and the South Oil Movements LPG Storage Area.

- As part of the Del Amo Extension Project, consider incorporating the following features into the design:
  - emergency traffic light sequencing capabilities
  - emergency turnaround points or emergency right turns for eastbound Del Amo Boulevard traffic
  - signage at both ends of the Del Amo Extension suggesting that motorists focus on their driving, even if a flaring event were in progress
  - a central median to minimize the potential for "head-on collision" as a result of driver distraction

- If remotely-operated physical barriers are installed at one or both ends of the Del Amo Extension, consider coordinating installation logistics and infrastructure with the current plans for the northbound barrier at the Crenshaw/Del Amo intersection. Additionally, in the same manner as for the proposed Crenshaw remotely-operated barriers, consider developing a joint Mobil/City activation protocol.

- To minimize the poten... for driver distractions, should a flaring e . occur, consider some minimal community familiarization via a brief article in the Mobil Community Report.

- For all traffic control issues associated with the Del Amo Extension, consider including necessary familiarization training for Torrance Police Department personnel. To support this, consider updating the traffic flow diagrams that are currently located in the Safety Advisor's Evaluation of Traffic Control Systems that are being assimilated into TPD familiarization training.

Further Minimizing the Potential for a Hydrocarbon Release from the South Oil Movements LPG Storage Area

- If the Del Amo Extension Project is implemented, consider increasing the frequency of testing and inspection of equipment in the South Oil Movements LPG Storage Area, to further minimize the likelihood of a potential hydrocarbon release.

- If the Del Amo Extension Project is implemented, consider installing ambient hydrocarbon detectors (possibly 4, to be determined by the Torrance Refinery) on the south perimeter of the South Oil Movements LPG Storage Area. Providing this indication to Torrance Refinery personnel of a large release of hydrocarbons could help limit the quantity of material potentially involved in a vapor cloud fire, and thus lower the potential consequences of the event. It should be noted that these considerations are consistent with the Safety Advisor's evaluation in Ref. 6, Section IV.E.8.

Coker Feed Tank 5000X1

Coker Feed Tank 5000X1 contains heated (~350°F) residum feed to the Coker Units. This residum is a mixture of high molecular weight hydrocarbons that must be heated to allow flow. Although it is considered a flammable material, it is relatively difficult to ignite, and is considered a relatively stable, non-volatile material that would not be expected to have any boilover potential. The primary off-site hazard is that, if combustion does occur, sulfur dioxide will be one of the combustion products, due to relatively high concentrations of residual sulfur. The tank also has a nitrogen gas blanket, nitrogen purge, and vapor recovery system.

As part of the Del Amo Boulevard Extension Project, any removal of a portion of the dike would require reconstruction at the affected location. To retain the appropriate dike volume, an expansion of other portions of the dike or an administratively-controlled reduction in the amount of material contained by Coker Feed Tank 5000X1 would be required.

Consider also determining if a tankage PHA has been performed on this tank to address potential hazards and safety system reliability issues (e.g., vapor recovery system reliability, overpressure protection, high level protection, fire protection issues, firefighting issues).

Refinery Perimeter Improvements

This is a non-safety-related item that is subjective, by nature. It may be prudent for both Mobil and the City to agree as to the desired long-term Torrance Refinery perimeter characteristics (and responsibilities for installation and maintenance) as part of the Del Amo Extension planning.

Although not considered necessary to maintain an adequate margin of safety, if perimeter improvements were to include the installation of a decorative block wall, similar to other perimeters of the Torrance Refinery, consider **evaluating** if the incremental cost of alternately installing a **reinforced** decorative block wall would provide some additional benefits of pedestrian thermal shielding and ground-level overpressure mitigation. It should be noted that the installation of an unreinforced wall may have the potential to introduce additional hazards.

ATTACHMENT G

KEY ELEMENTS

Potential Memorandum of Understanding

The primary objective of this evaluation is identify and examine appropriate safety issues, and convene a joint Mobil and City of Torrance meeting to finalize design decisions now, minimizing the potential for extra work or retrofit at a later time. It is also an objective to establish a platform for addressing these issues that precludes the potential for contentious legal disputes at a later time.

Thus, to efficiently close out these issues, the following elements might be considered for inclusion in a joint City/Mobil memorandum that identifies this evaluation and resolution of potential safety issues:

- With respect to potential acute off-site hazards, the set of safety issues addressed in this evaluation is consistent with all significant safety issues known to either Mobil or the City at this time.
- The depth of evaluation is considered sufficiently thorough such that the reevaluation of these same safety issues at a future date would not be considered necessary unless relevant changes to the Torrance Refinery were to occur or traffic patterns on the Del Amo Boulevard Extension were significantly different than the design basis.
- Once the design and usage features identified in Attachment F have been implemented by the responsible party, this implementation is expected to adequately address the associated safety issue. Thus, it is expected that no additional significant features would be required to address these same safety issues.
- A meeting was held with the appropriate representatives of both the City of Torrance and Mobil to finalize the decisions associated with which safety features were required.
- It is recognized that increased public proximity will result in increased visibility of the elevated flares, and possibly an increase in the public's perception of risk contributed by the Torrance Refinery. These risk perception issues could also result in an increase in Community "odor" complaints. The City should recognize that these perception issues do not dilute the fact that these safety and public health issues were adequately reviewed as part of this evaluation.

If the Del Amo Extension Project is implemented, one possible credible hazard is a motorist distraction during a significant flaring that could result in an increased likelihood of a traffic accident. Are there any liability issues for the Torrance Refinery, associated with this event, that should be addressed now?

<u>Zoning Issues</u>

Given that the hazard analysis results and conclusions are based on the near-area characteristics in existence at the time of the analysis, from a safety perspective, consider restricting the zoning to remain as is for the industrial areas immediately south of the proposed Del Amo Boulevard Extension location.

ATTACHMENT H

SUMMARY OF KEY ACRONYMS

ACRONYM	MEANING
ARCHIE	AUTOMATED RESOURCE FOR CHEMICAL HAZARD INCIDENT EVALUATION (CONSEQUENCE ANALYSIS SOFTWARE)
DOT	DEPARTMENT OF TRANSPORTATION
EPA	ENVIRONMENTAL PROTECTION AGENCY
FMEA	FEDERAL EMERGENCY MANAGEMENT AGENCY
LEL	LOWER EXPLOSIVE LIMIT
LFL	LOWER FLAMMABILITY LIMIT
LPG	LIQUEFIED PETROLEUM GAS
OCA	OFF-SITE CONSEQUENCE ANALYSIS
OES	OFFICE OF EMERGENCY SERVICES
POTW	PUBLICLY-OWNED TREATMENT WORKS
RMP	RISK MANAGEMENT PROGRAM (A SAFETY INITIATIVE ADMINISTERED BY THE U.S. EPA)
RMPP	RISK MANAGEMENT AND PREVENTION PROGRAM (A SAFETY INITIATIVE MANAGED BY CALIFORNIA ADMINISTERING AGENCIES, E.G., TORRANCE FIRE DEPARTMENT)
TFD	TORRANCE FIRE DEPARTMENT
UVCE	UNCONFINED VAPOR CLOUD EXPLOSION
ZTOF	ZINK THERMAL OXIDIZING FLARE

APPENDIX XVI

EXXONMOBIL OIL CORPORATION

AMENDMENT NO. 1 TO THE 1999 AGREEMENT

DEL AMO BLVD EXTENSION, T-30

AMENDMENT #1 OF 1999 AGREEMENT BETWEEN
MOBIL OIL CORPORATION and the CITY OF TORRANCE
ExxonMobil Oil Corporation

The Table below summarizes information and requirements from the above-referenced Agreement between the City and ExxonMobil Oil Corporation. The purpose is to inform a prospective Bidder and Contractor.

Sec. I.B.1	City will undertake: ☐ Los Angeles County Sanitation Districts sewer pipeline relocation ☐ Relocation of four water lines ☐ Installation of remotely-operated physical barriers at both east and west end of Del Amo & City to provide 120 VAC power for field signal apparatus, which is to be supplied by ExxonMobil ☐ No sidewalk or bicycle path on Del Amo Extension. ▪ Signs will be installed at both east and west end of the Del Amo, stating pedestrians and cyclists are prohibited ☐ Provision of truck access for BOC during construction ▪ Any outages will be scheduled in advance with the agreement of BOC ☐ Provide lighting under new railroad overpass, if permitted by railroad owner ☐ Installation of a median ☐ Removal of city-owned firewater hydrants & capping of firewater lines on Easement Property ☐ City will require that its contractors provide temporary shelters during the Project ☐ Relocate of the east-west rail spur ▪ Due to BOC's requirements, such work may only be performed between November and April of each year. ▪ Outages will be scheduled in advance with the agreement of BOC.

AMENDMENT NO. 1 TO THE AGREEMENT BETWEEN MOBIL OIL CORPORATION AND THE CITY OF TORRANCE

This Amendment Number 1 (the "Amendment") to the AGREEMENT BETWEEN MOBIL OIL CORPORATION AND THE CITY OF TORRANCE, dated May 11, 1999, is made and entered into as of September 16, 2008 ("Effective Date"), by and between the City of Torrance, California, a municipal corporation ("City") and ExxonMobil Oil Corporation ("ExxonMobil"), a New York corporation, as the successor company to Mobil Oil Corporation, collectively referred to herein as the "Parties" or, individually, as a "Party".

RECITALS

WHEREAS, on May 11, 1999, the City and ExxonMobil entered into an agreement, entitled "AGREEMENT BETWEEN MOBIL OIL CORPORATION AND THE CITY OF TORRANCE," (the "1999 Agreement") under which ExxonMobil and the City agreed to perform certain activities with respect to the City's proposed project to extend Del Amo Boulevard from Madrona Avenue to Crenshaw Boulevard in the City of Torrance, California (the "Del Amo Project" or the "Del Amo Extension"); and

WHEREAS, pursuant to the terms of the 1999 Agreement, ExxonMobil and the City entered into a Letter Agreement, dated June 30, 1999, under which ExxonMobil made an irrevocable offer of dedication to the City as a permanent easement for street and highway purposes of approximately one acre of land (the "Easement Property") within the ExxonMobil Refinery located in Torrance, California (the "Refinery"); and

WHEREAS, the 1999 Agreement contemplated performance of certain activities by ExxonMobil, the City, and third parties on the Easement Property and on adjacent property at the Refinery, to facilitate the City's proposed Del Amo Project; and

WHEREAS, the 1999 Agreement established certain allocations of costs between the parties for the work to be done in completing the Del Amo Project; and

WHEREAS, in the 1999 Agreement ExxonMobil agreed to contribute $3 million toward the cost of the Del Amo Project; and

WHEREAS, in August 2006, the City and ExxonMobil developed a shared cost estimate for the cost of the Del Amo Project, and based upon that estimate of $8.5 million, less the $3 million to be contributed by ExxonMobil pursuant to the 1999 Agreement, the City proceeded to secure additional funding of $5.5 million; and

WHEREAS, in August, 2007, ExxonMobil advised the City of a revised cost estimate of $11.5 million for the Del Amo Project, $3 million more than the $3 million ExxonMobil contribution to be made pursuant to the 1999 Agreement and the $5.5 million in additional funding previously secured by the City; and

099-100

ORIGINAL COPY

WHEREAS, the City agrees that ExxonMobil's obligations under the 1999 Agreement, and liability for any and all costs and expenses thereunder relating to or concerning the Del Amo Project, shall in no event and under no circumstances exceed $12.5 million dollars (including the $5.5 million dollars to be expended by ExxonMobil and reimbursed by the City); and

WHEREAS, the City agrees that it will bring forward an amendment for City Council consideration to amend Ordinance No. 3351 to authorize a ten percent (10%) increase in total maximum input upon demonstration of no degradation of the Refinery's environmental, health and safety performance as a result of such increase (this clause does not constitute approval of the ten percent increase and approval of the increase can only be given by the City Council); and

WHEREAS, ExxonMobil and the City wish to continue their historic cooperation; and

WHEREAS, ExxonMobil and the City desire to enter into this Amendment No. 1 to the 1999 Agreement in order to further define the duties and obligations of ExxonMobil and the City with respect to the Del Amo Project.

NOW, THEREFORE, in consideration of the promises and acts contained herein, the Parties agree to amend the 1999 Agreement as follows:

I. The Parties agree to amend Section 1, City's Obligations, by adding new subsections A, B and C as follows:

A. The City agrees that, pursuant to City Ordinance No. 3351, the City will consider a ten percent (10%) increase in maximum total input for the Refinery, including a total maximum average annual input of crude at 176 Thousand Barrels per Day ("TBPD") and intermediate feedstock for a total not to exceed 220 TBPD, excluding external blend components (this clause does not constitute approval of the ten percent increase and approval of the increase can only be given by the City Council). Such increase will be subject to a demonstration by ExxonMobil of no degradation of the Refinery's environmental, health and safety performance as a result of such increase. An adequate demonstration will require the concurrence of the City Council upon the recommendation of the City Staff, the City Fire Department, and a third party safety expert acceptable to the City. ExxonMobil will pay the cost of the third party expert. The City and ExxonMobil agree that, in the event that a demonstration of no degradation is considered inadequate for any reason, the City and ExxonMobil will work to reach a mutually agreeable resolution of any alleged inadequacies. The acceptance of any findings is at the sole discretion of the City.

B. The City agrees that it will undertake the following work or actions pursuant to the 1999 Agreement and pursuant to the "Torrance Refinery Safety Advisor Project, Torrance Refinery ("Rate Cap"), Final Report," dated May 5,

1999 and attached as Exhibit A to the 1999 Agreement (the "Safety Advisor Report"):

1) Scope of Work

(a) The design, oversight, coordination and management of the Los Angeles County Sanitation Districts sewer pipeline relocation, including negotiation of required agreements for the sewer pipeline relocation.

(b) The design, oversight, coordination and management of the relocation of four water lines crossing the Easement Property.

(c) Installation of remotely-operated physical barriers at both the east and west end of the Del Amo Project (also identified herein as the Del Amo Extension) and City to provide 120 VAC power for the field signal apparatus, which is to be supplied by ExxonMobil.

(d) The City and ExxonMobil will jointly develop emergency communication and activation protocols for response to emergency events. The City will provide copies of its emergency response procedures to ExxonMobil for review during development of the protocols.

(e) There will be no sidewalk or bicycle path on the Del Amo Extension. Signs will be installed at both the east and west end of the Del Amo Extension stating that pedestrians and cyclists are prohibited on the Del Amo Extension.

(f) Provision of truck access for BOC during construction. Any outages will be scheduled in advance with the agreement of BOC.

(g) Provide lighting under the new railroad overpass, if permitted by the railroad owner.

(h) Incorporation of the following Safety Advisor Report recommendations in the design of the roadway:

(i) Designing the eastbound traffic flow, so that even during rush hour, traffic is not backed up and "stalled" at the point closest to the elevated flares and the South Oil Movements LPG Storage Area on the Refinery Property.

(ii) Emergency traffic light sequencing capabilities.

(iii) Installation of a median to minimize the potential for head-on collisions resulting from driver distraction.

(iv) For traffic control issues associated with the Del Amo Extension, consider including familiarization training for the Torrance Police or other personnel. Such training should include updating the traffic flow diagrams that are located in the Safety Advisor's Evaluation of Traffic Control Systems, assimilated into the Torrance Police Department training program.

(i) Removal of City-owned firewater hydrants and capping of firewater lines on the Easement Property.

(j) The City will require that its contractors provide temporary shelters during the Del Amo Project.

(k) Relocation of the east-west rail spur (the aluminum spur located off of ExxonMobil property) to provide on-going rail service to BOC Gases. Due to BOC's requirements, such work may only be performed between November and April of each year. Outages will be scheduled in advance with the agreement of BOC.

2) Funding of Work and Accounting For Costs

(a) The City shall pay the costs for work identified as part of the City's Scope of Work under the 1999 Agreement, as amended herein. Such costs shall not be considered as part of the costs to be borne by ExxonMobil, pursuant to Section II.G(3) of this Amendment.

3) Environmental Conditions

(a) The City has conducted soil tests on the Easement Property and has concluded that no remediation is required for the property's intended use.

C. The City has requested that it be permitted to oversee, coordinate and manage the relocation of the Los Angeles County Sanitation Districts sewer pipeline, as stated in Section1(B)(1)(a) herein. This activity will require relocation of the sewer pipeline by or at the direction of the City from the Easement Property onto another location within ExxonMobil's Refinery property. The City and ExxonMobil shall enter into a "RIGHT OF ENTRY FOR CONSTRUCTION PURPOSES" agreement regarding the rights and obligations, including indemnification, of the City in furtherance of this activity.

II. The Parties agree to amend Section 4, ExxonMobil's Obligations With Respect to the Del Amo Project, by adding a new subsection G as follows:

G. ExxonMobil agrees that it will undertake the following work or actions to assist the City in completion of the Del Amo Project:

1) Scope of Work

(a) Project definition, project development, project management, detailed engineering design, and construction management to support the implementation of this scope of work.

(b) Specific scope of work items are as follows:

(i) Installation of temporary shelters and temporary lighting for ExxonMobil's construction activities.

(ii) Modification of the southwest corner of Tank 5000x1 dike wall to provide adequate space for the relocation of other facilities on ExxonMobil property and restoration of containment capacity of the Tank 5000x1 berm to 110% of the tanks rated capacity. These actions will include demolition, construction and excavation and disposal of soil as necessary

(iii) Relocation, demolition, and/or reconstruction of surface drains and associated process water and stormwater pipelines.

(iv) Relocation, demolition and/or reconstruction of various structures, equipment or shelters currently located on the Easement Property or on adjacent Refinery property as may be determined to be necessary by ExxonMobil for completion of the ExxonMobil scope of work.

(v) Construction, relocation and/or modification, as may be required, of three ExxonMobil pipelines and their related appurtenances, designated as one 8-inch (No. M-134), one 8-inch (No. M-135), and one 8-inch (No. M-141) pipelines, respectively. Existing ExxonMobil pipelines that are determined by ExxonMobil to be in conflict with the City Project will be purged and abandoned in place pursuant to standard industry practice.

(vi) Design and coordination of the relocation of three third party hydrocarbon pipelines located within ExxonMobil's property. Existing portions of these pipelines that are underground will be purged and abandoned in place. It is expected that the third party owners of these pipelines will pay a portion of the relocation costs pursuant to existing agreements with such parties. In the event that ExxonMobil is unable to obtain agreement with, or entering into such agreement is unreasonably delayed by, any or all of the three third party owners regarding relocation of a hydrocarbon pipeline(s), or in the event that, after agreement with such party or parties, relocation of any or all of the third party pipelines is unreasonably delayed due to the acts or failures to act of such third party or parties, ExxonMobil shall provide written notification of such event to the City within 72 hours after ExxonMobil becomes aware of such event.

ExxonMobil and the City shall then meet and confer regarding resolution of issues regarding relocation of the third party pipeline(s).

(vii) Relocation by ExxonMobil of firewater lines and two firewater hydrants in the Easement Property.

(viii) Relocation of ExxonMobil power poles and lighting as may be required for Easement Property clearance.

(ix) Removal by ExxonMobil of a monitoring well on the Easement Property and installation of a new monitoring well on Refinery property.

(x) Construction of a new portion of access road, and reconnection to the existing access road on the south side of Tank 5000x1 as may be determined to be required by ExxonMobil. Reconstruction, as required by the relocation of pipelines, of the access road along Railroad Avenue.

(xi) Excavation, transportation, storage and disposal of soil and/or water associated with ExxonMobil's work or actions.

(xii) Removal of existing fencing and installation of new chain link fencing to ExxonMobil standards.

(xiii) Installation of "No Trespassing" signs on the Refinery perimeter fencing adjacent to the Easement Property.

(xiv) Provision of remote field signal apparatus located in close proximity to the road barriers to be constructed by the City on the Del Amo roadway. The field signal apparatus will communicate with the ExxonMobil operating consoles. ExxonMobil and the City will jointly develop emergency communication and activation protocols for response to emergency events. ExxonMobil will provide copies of its emergency response procedures to the City for review during development of the protocols.

(xv) Installation of four additional hydrocarbon detectors on the south perimeter of the Refinery's South Oil Movements LPG Storage Area.

(xvi) Performance of community familiarization through issuance of a brief article in ExxonMobil's community newsletter regarding the potential for driver distraction should a flaring event occur.

2) Schedule

(a) Subject to refinery operations, agreements with third parties, and review and approval by regulatory agencies, as applicable, ExxonMobil will complete the work required to clear the Easement Property (Items 1(b)(i)-(xii)) within the schedule prepared by ExxonMobil, a copy of which is attached to this Amendment as Exhibit A.. ExxonMobil will notify the City of any events that may significantly impact the schedule. Upon approval of the City, the schedule may be extended for such period of time as may be required by ExxonMobil to address significant impacts to the schedule and in a timeframe acceptable to the City so as to not jeopardize the City's funding requirements.

(b) The remaining work items (Items 1(b) (xiii)-(xvi)) will be completed within the proposed Del Amo Project completion schedule.

(c) ExxonMobil reserves the right to revise its proposed schedule and will notify the City of any significant change in schedule.

3) Funding of Work and Accounting for Costs

(a) It is understood that ExxonMobil has been expending money from the $3 million reserve on design. ExxonMobil agrees that it will not proceed with any construction activities and/or incur expenses related to construction activities without prior written authorization from the City. Any construction actvities and/or expenses related to construction activities without prior written authorization from the City will not be reimbursed by the City.

(b) The City understands that the $3 million reserve established in the Del Amo Project pursuant to the 1999 Agreement was to be ExxonMobil's total monetary contribution to the Del Amo Project. ExxonMobil has to date committed approximately $1,000,000 from funds in the $3 million reserve.

(c) ExxonMobil and the City acknowledge that pursuant to ExxonMobil's scope of work set forth in Section II.G(1) above, certain activities will be undertaken on ExxonMobil's property, and that these activities will be performed by ExxonMobil or its contractors.

(d) ExxonMobil shall provide to the City an accounting of expenditures incurred on a quarterly basis, commencing with the third quarter of 2007. ExxonMobil shall provide such accounting to the City within sixty (60) days after the end of the quarter. The City shall review any such accounting and respond with its acceptance or notice of dispute of any charges within thirty (30) days of receipt of any accounting. The City understands and agrees that the failure to accept or dispute charges within the thirty (30) day timeframe shall be deemed as acceptance by the City of the ExxonMobil expenditures.

(e) The City agrees to reimburse ExxonMobil for the first $5.5 million of expenditures, over the $3 million dollar reserve, for ExxonMobil's scope of

work. Payment shall be made within seventy-five (75) days of final acceptance by the City of the ExxonMobil expenditures.

(f) The City agrees that ExxonMobil's obligations under the 1999 Agreement, and liability for any and all costs and expenses thereunder relating to or concerning the Del Amo Project, shall in no event and under no circumstances exceed: 1) the $3 million dollar reserve; 2) the $5.5 million dollars to be expended by ExxonMobil and reimbursed by the City; and 3) such additional costs and expenses not to exceed $4 million dollars as may be incurred or expended by ExxonMobil.

4) Execution of Deed

(a) ExxonMobil will execute a "Roadway Easement and/or Right of Way" deed to the City once the actions identified as being the responsibility of ExxonMobil under the 1999 Agreement, as amended herein, have been completed.

III. The Parties agree to amend Section 5, Third Party Risk Analysis, by deleting the Section in its entirety and replacing it with a new Section 5 as follows:

5. Third Party Risk Analysis

A. A third party risk analysis has been completed which determines that raising the annual average refinery input limit to 200 TBPD, excluding external blend components, is acceptable as long as ExxonMobil complies with all of the mitigation measures contained in Exhibit A, as amended below.

B. Torrance Refinery Safety Advisor Project, Torrance Refinery Increase Report of May 5, 1999 ("Safety Advisor Report") and Actions Under The 1999 Agreement

(1) The Parties agree that the following Safety Advisor recommendations and actions under the 1999 Agreement will not be undertaken:

(a) Installation of signage at both ends of the Del Amo Extension suggesting that drivers focus on driving, even if a flaring event is in progress.

(b) Development of a common truck entrance and exit for ExxonMobil, Dow and BOC.

(c) Installation of a reinforced decorative concrete wall on the refinery perimeter.

(2) The Parties further agree that the following Safety Advisor Report recommendations and 1999 Agreement actions have been completed or addressed:

(a) ExxonMobil provided the City with an irrevocable offer to dedicate 39,700 square feet of property for the Del Amo Project under a letter agreement entered into between ExxonMobil and the City dated June 30, 1999.

(b) ExxonMobil provided the City with an unconditional, irrevocable guarantee in the amount of $3 million under a Guarantee of Payment, dated July 7, 1999, executed by ExxonMobil.

(c) ExxonMobil confirmed that no additional safety or hazard mitigation measures are required due to the construction of a pentane sphere near the Liquefied Petroleum Gases ("LPG") storage area.

(d) ExxonMobil provided the City with the Process Hazard Analysis ("PHA") for Tank 5000x1. No additional safety precautions are required for Tank 5000x1.

Except as herein amended, all of the terms, provisions and conditions of the 1999 Agreement are reaffirmed and shall remain in full force and effect.

IN WITNESS WHEREOF, this Amendment has been executed, in duplicate, by the Parties and effective as of the date first above written.

CITY OF TORRANCE,
a Municipal Corporation

Frank Scotto, Mayor

ExxonMobil Oil Corporation

By: _____
Maxwell A. Ocansey
Torrance Refinery Manager
For ExxonMobil Oil Corporation

ATTEST:

Sue Herbers, City Clerk

APPROVED AS TO FORM:

JOHN L. FELLOWS III
City Attorney

By: _____
Patrick Q. Sullivan
Deputy City Attorney

APPENDIX XVII

EXXONMOBIL OIL CORPORATION

RIGHT OF ENTRY AGREEMENT

DEL AMO BLVD EXTENSION, T-30

RIGHT OF ENTRY AGREEMENT FOR CONSTRUCTION PURPOSES
ExxonMobil Oil Corporation

The Table below summarizes information and requirements from the above-referenced Agreement between the City and ExxonMobil Oil Corporation. The purpose is to inform a prospective Bidder and Contractor.

Sec. 1(b)	☐ Must avoid interference with ExxonMobil's operations at Refinery ▪ ExxonMobil will notify City in writing when it believes any work performed/scheduled by the City will interfere with operations ▪ 30 days are given to Parties after notice to meet & agree upon revised work schedule ▪ Interfering work will not be performed during 30-day period
Sec. 1(c)	☐ City & City-Affiliated Parties will not enter onto Access Property until ExxonMobil completes relocation of its fence to exclude the Property ☐ ExxonMobil will provide written notice to City upon completion of relocation of fence line ▪ Right of City to enter Property will commence upon receipt of notice.
Sec. 2	☐ City & City-Affiliated Parties indemnify ExxonMobil (see Section 2)
Sec. 3(a)	☐ City & City-Affiliated Parties releases ExxonMobil from and assumes any and all risk of, loss, damage, or injury of any kind to any person or property, including, without limitation, the Access Property
Sec. 3(b)	☐ City, City-Affiliated Parties, and respective successors and assigns, waives all claims and demands against ExxonMobil pertaining Liabilities arising from exercise of rights or performance of obligations under Agreement.
Sec. 3(c)	☐ City, City-Affiliated Parties, and respective successors and assigns, waives the benefit of California Civil Code Section 1542
Sec. 4(a)	☐ Insurance coverage during term of Agreement: ▪ General Liability: $1,000,000 per occurrence ▪ Automobile Liability: $1,000,000 per accident ▪ Employer's Liability: $1,000,000 per accident for bodily injury or disease

Sec. 4(b)	▪ Cover ExxonMobil and its Affiliates as additional insureds ○ Be primary as to all other policies (including any deductibles) which may provide coverage ▪ City & insurer(s) providing coverage in Section 4 will waive all rights of subrogation and/or contribution against ExxonMobil
Sec. 4(c)	☐ Prior to entering Access Property, the City will furnish ExxonMobil with insurance endorsements or certificates evidencing the existence, amounts, and coverage of required insurance. ▪ Must be signed by a person authorized by insurer to bind coverage on its behalf. ☐ All contractors and subcontractors covered by Agreement are, or required to be, insured to the same limits required of the City
Sec. 4(d)	☐ Prior to expiration of any policy, City will furnish ExxonMobil with certificates of renewal ▪ Each certificate expressly state that such policies will not be cancelable or otherwise subject to modification except after 30 days prior written notice to ExxonMobil
Sec. 5	☐ City & City-Affiliated Parties must take all steps necessary comply with Agreement, as well as all applicable laws and regulations, when on Property ☐ If such lien is placed upon Access Property, the City will immediately cause it to be removed.
Sec. 6(b)	☐ City will ensure that parties comply with all applicable laws and regulations concerning Hazardous Materials.

Sec. 6(c)	☐ City will notify ExxonMobil in writing per Section 9(e) below of any:
	  ▪ Hazardous Materials
	  ▪ Release, spill, or discharge in, on, or under the Access Property
	☐ City-Affiliated Party will stop all work in area of discovery until:
	  ▪ ExxonMobil determines whether Hazardous Materials discovered resulted from past or present Refinery-related operations
	  ▪ Extent to which the Hazardous Materials will be remediated, if at all

Sec. 6(f)	☐ City agrees to promptly perform any environmental remediation associated with Hazardous Materials on Access Property that are not responsibility of ExxonMobil in accordance with all applicable laws and regulations
Sec. 6(g)	☐ City will ensure that all notifications, communications, and documentation to regulatory agencies pertaining to remediation activities will be in the name of the City or City-Affiliated Parties, and not in the name of ExxonMobil

RIGHT OF ENTRY AGREEMENT FOR CONSTRUCTION PURPOSES

This Right of Entry Agreement For Construction Purposes (the "Agreement") is made and entered into as of April 1, 2009, by and between ExxonMobil Oil Corporation, a New York corporation ("ExxonMobil"), and the City of Torrance, a municipal corporation (the "City") (ExxonMobil and the City may also be identified herein as a "Party" or collectively as the "Parties").

RECITALS

WHEREAS, on May 11, 1999, the City and Mobil Oil Corporation (hereinafter referred to by the name of its successor in interest, ExxonMobil) entered into an agreement, entitled "AGREEMENT BETWEEN MOBIL OIL CORPORATION AND THE CITY OF TORRANCE" (the "1999 Agreement"), under which the parties thereto agreed to perform certain activities with respect to the City's proposed project to extend Del Amo Boulevard from Madrona Avenue to Crenshaw Boulevard (the "Del Amo Project"); and

WHEREAS, pursuant to the terms of the 1999 Agreement, ExxonMobil and the City entered into a Letter Agreement, dated June 30, 1999, under which ExxonMobil made an irrevocable offer to grant the City an easement to facilitate the Del Amo Project over approximately one acre of land (the "Easement Property") within the ExxonMobil refinery located in Torrance, California (the "Refinery"); and

WHEREAS, on September 16, 2008, ExxonMobil and the City entered into an "AMENDMENT NO.1 TO THE AGREEMENT BETWEEN MOBIL OIL CORPORATION AND THE CITY OF TORRANCE" (the "Amendment"), in order to further define the duties and obligations of ExxonMobil and the City with respect to the Del Amo Project; and

WHEREAS, the Amendment specifies that ExxonMobil will execute a "Roadway Easement and/or Right of Way" to the City over the Easement Property once actions identified as being the responsibility of ExxonMobil have been completed; and

WHEREAS, the Amendment also specifies that the City will be permitted to enter onto the Easement Property and adjacent portions of the Refinery prior to execution of the "Roadway Easement and/or Right of Way" under a "RIGHT OF ENTRY AGREEMENT FOR CONSTRUCTION PURPOSES" executed by ExxonMobil and the City, for the purpose of performing certain duties and obligations as specified in the Amendment.

NOW, THEREFORE, in consideration of the promises and acts contained herein, the Parties agree as follows:

20090158

COPY

1. Entry onto the Access Property

(a) Upon execution of this Agreement, and subject to the limitations stated herein, the City, and its officers, employees, contractors, subcontractors, agents, representatives, consultants, and invitees (collectively, the "City-Affiliated Parties"), will be authorized to enter the Easement Property and adjoining portions of the Refinery, as identified in Exhibit A to this Agreement (the Easement Property and such adjoining portions of the Refinery being hereinafter collectively referred to as the "Access Property"), for the purpose of implementing and carrying out:

(i) The actions specified under paragraph I(C) of the Amendment, which provides:

> "C. The City has requested that it be permitted to oversee, coordinate and manage the relocation of the Los Angeles County Sanitation Districts sewer pipeline.... This activity will require relocation of the sewer pipeline by or at the direction of the City from the Easement Property onto another location within ExxonMobil's Refinery property. The City and ExxonMobil shall enter into a 'RIGHT OF ENTRY FOR CONSTRUCTION PURPOSES' agreement regarding the rights and obligations, including indemnification, of the City in furtherance of this activity."

The new location of the Los Angeles County Sanitation Districts sewer pipeline is set forth in Exhibit B to this Agreement.

(ii) The relocation of an 18-inch water line owned and operated by the California Water Service Company from its current location to the location set forth in Exhibit C to this Agreement.

(iii) The removal of an ExxonMobil parking lot driveway, the location of which is set forth in Exhibit D to this Agreement.

(iv) Such other activities as the Parties agree to in advance and in writing. For purposes of this Agreement, advance notice will be considered to have been given if it is received by the recipient no less than forty-eight (48) hours before the activity at issue is supposed to take place.

(b) The activities specified in Sections 1(a)(i)-(iv) above will be limited to the dates set forth in a written schedule that the Parties will agree upon in advance of any activity being undertaken. In carrying out these activities, the City and the City-Affiliated Parties will, at all times, avoid interference with ExxonMobil's operations at the Refinery. ExxonMobil will notify the City in writing whenever it reasonably believes that any work being performed or scheduled to be performed by the City or the City-Affiliated Parties interferes with or will interfere with ExxonMobil's operations. The Parties will then have thirty (30) days from the City's receipt of this notice to meet and mutually agree upon a revised schedule of work for the City or the City-Affiliated Parties, provided that, during this 30-day period, the City and the City-Affiliated Parties will abstain from performing the work that is the subject of the actual or threatened interference.

(c) Notwithstanding the above, the City and the City-Affiliated Parties will not enter onto the Access Property under this Agreement until ExxonMobil has completed the relocation of its existing fence line to exclude the Access Property and other portions of the Refinery property, as may be required, from the controlled access portion of the Refinery. ExxonMobil will relocate the existing fence line within six (6) months of receiving written authorization to begin doing so from the City. ExxonMobil will provide written notice to the City upon completing the relocation of the fence line, and the right of the City and the City-Affiliated Parties to enter onto the Access Property under this Agreement will only commence upon the receipt of this notice.

2. Indemnification by the City

The City, on behalf of itself, the City-Affiliated Parties, and their respective successors and assigns, agrees to indemnify, defend by counsel satisfactory to ExxonMobil, and hold harmless ExxonMobil, its Affiliates (as defined below), and each of their respective officers, employees, contractors, subcontractors, agents, representatives, consultants, invitees, successors, and assigns, to the maximum extent allowed by law, from and against any and all claims, demands, suits, judgments, fines, penalties, encumbrances, liens, damages of any type whatsoever (whether foreseeable or unforeseeable), costs and expenses (including, without limitation, any litigation expenses and experts' and attorneys' fees), liabilities, or losses (collectively, the "Liabilities"), arising out of, connected with, or relating in any way to the following: (i) the acts or omissions (including, without limitation, the negligence, gross negligence, or willful misconduct) of the City or the City-Affiliated Parties in exercising their rights or performing their obligations under this Agreement; (ii) bodily and/or personal injury or death of any person (including, without limitation, employees of the City or the City-Affiliated Parties) arising out of, connected with, or relating in any way to the exercise of rights or performance of obligations under this Agreement by the City or the City-Affiliated Parties; or (iii) non-performance, breach, or violation by the City or the City-Affiliated Parties of any term or condition of this Agreement, whether occurring during the term of this Agreement or thereafter.

For purposes of this Agreement, ExxonMobil's "Affiliates" include: (a) the parent of ExxonMobil Oil Corporation; (b) any company or partnership in the United States which ExxonMobil Oil Corporation or its parent now or hereafter owns, or in which ExxonMobil Oil Corporation or its parent now or hereafter controls, directly or indirectly, more than fifty percent (50%) of the ownership interest having a right to vote or to appoint directors or their functional equivalents (an "Affiliated Company"); (c) any joint venture in which ExxonMobil Oil Corporation, its parent, or any Affiliated Company is the operator; and (d) any successor in interest to (a) through (c).

3. Assumption of Liability by the City

(a) To the maximum extent allowed by law, the City, on behalf of itself, the City-Affiliated Parties, and their respective successors and assigns, releases ExxonMobil, its Affiliates, and each of their respective officers, employees, contractors, subcontractors, agents, representatives, consultants, invitees, successors, and assigns, from, and assumes any and all risk of, loss, damage, or injury of any kind to any person or property, including, without limitation, the

Access Property, and any other property belonging to, or under the control or custody of, the City, the City-Affiliated Parties, and their respective successors and assigns, arising from the exercise of rights or performance of obligations under this Agreement by the City or the City-Affiliated Parties. The City's assumption of risk will include, without limitation, any and all loss, damage, or injury caused by defects in structures or improvements on the Access Property; accident, fire, or other casualties on the Access Property; and electrical discharge, noise, or vibration resulting from the operations of ExxonMobil or other persons or entities employed, retained, or engaged by ExxonMobil to perform activities at the Refinery.

(b) The City, on behalf of itself, the City-Affiliated Parties, and their respective successors and assigns, hereby waives all claims and demands against ExxonMobil, its Affiliates, and each of their respective officers, employees, contractors, subcontractors, agents, representatives, consultants, invitees, successors, and assigns, pertaining to Liabilities arising from the exercise of rights or performance of obligations under this Agreement by the City or the City-Affiliated Parties.

(c) The City, on behalf of itself, the City-Affiliated Parties, and their respective successors and assigns, hereby waives the benefit of California Civil Code Section 1542, which provides that: "A general release does not extend to claims which the creditor does not know or suspect to exist in his favor at the time of executing the release, which if known by him must have materially affected his or her settlement with the debtor."

(d) The provisions of this Section will survive the termination or expiration of this Agreement.

4. **Insurance**

(a) The City, at its sole cost and expense, will obtain and maintain in full force and effect during the term of this Agreement the following insurance coverage: (i) General Liability: $1,000,000 per occurrence for bodily injury, personal injury, death, and property damage; (ii) Automobile Liability for owned, non-owned and rented equipment: $1,000,000 per accident for bodily injury, death, and property damage; and (iii) Employer's Liability: $1,000,000 per accident for bodily injury or disease.

(b) Notwithstanding any provision of this Agreement to the contrary, the City's insurance policy(ies) described in this Section 4 will: (i) cover ExxonMobil and its Affiliates as additional insureds in connection with the exercise of rights or performance of obligations under this Agreement by the City or the City-Affiliated Parties; and (ii) be primary as to all other policies (including any deductibles) which may provide coverage. The Parties agree that the City and its insurer(s) providing coverage in this Section 4 will waive all rights of subrogation and/or contribution against ExxonMobil and its Affiliates with respect to liabilities assumed by the City.

(c) ExxonMobil reserves the right, throughout the term of this Agreement, to review and change the amount and type of insurance coverage it requires in connection with this Agreement. Prior to entering the Access Property, or performing any work or maintenance thereon, the City will furnish ExxonMobil with insurance endorsements or certificates evidencing the existence,

amounts, and coverage of the required insurance. The endorsements or certificates must be signed by a person authorized by the insurer to bind coverage on its behalf. In most instances, ExxonMobil does not allow self-insurance; however, if the City can demonstrate assets or retention funds sufficient to meet ExxonMobil's self-insurance requirements, ExxonMobil may, in is sole and absolute discretion, permit the City to self-insure. The right to self-insure with respect to any coverage required hereunder may be granted or revoked at the sole and absolute discretion of ExxonMobil. ExxonMobil will not be liable for the payment of any premiums or assessments for insurance required to be maintained by the City under this Agreement. The City agrees that all contractors and subcontractors covered by this Agreement are, or will be required to be, insured to the same limits required of the City or that they will be included under the City's insurance coverage.

(d) Prior to the expiration of any policy, the City will furnish ExxonMobil with certificates of renewal or "binders" thereof. Each certificate will expressly state that such policies will not be cancelable or otherwise subject to modification except after thirty (30) days' prior written notice to ExxonMobil.

5. Compliance by the City

Whenever present upon the Access Property, the City and City-Affiliated Parties will take all steps necessary to ensure compliance with the terms and conditions of this Agreement, as well as with all applicable federal, state, and local laws and regulations. The City will ensure that no lien is placed upon the Access Property due to the exercise of rights or performance of obligations under this Agreement by the City or the City-Affiliated Parties. If such a lien is placed upon the Access Property, the City will immediately cause it to be removed.

6. Environmental Issues

(a) For purposes of this Agreement, the term "Hazardous Materials" will include: (i) any substance that is defined or listed in, or otherwise classified pursuant to, any federal, state, or local law or regulation as a "hazardous substance," "extremely hazardous substance," "hazardous material," "hazardous waste," "infectious waste," "medical waste," "toxic substance," "toxic pollutant," or any other formulation intended to classify substances by reason of deleterious properties, such as ignitability, corrosivity, reactivity, carcinogenicity, toxicity, or reproductive toxicity; and (ii) any other substance the presence of which is recognized as detrimental to property, natural resources, health, or the environment.

(b) The City acknowledges that the Refinery is a facility at which Hazardous Materials have been managed and used on a routine basis and that Hazardous Materials may have been spilled, released, or discharged in, on, or under the Access Property as a result of Refinery-related operations. The City will take all steps necessary to ensure that it and the City-Affiliated Parties comply with all applicable federal, state, and local laws and regulations concerning Hazardous Materials, including, without limitation, those pertaining to the communication of occupational safety and health hazards to employees and contractors.

(c) The City will notify ExxonMobil in writing pursuant to Section 9(e) below of any: (i) Hazardous Materials that it or any City-Affiliated Party discovers on the Access Property in the

course of exercising its rights or performing its obligations under this Agreement; or (ii) release, spill, or discharge in, on, or under the Access Property caused by the City or by any City-Affiliated Party. With respect to Hazardous Materials that the City or any City-Affiliated Party discovers under Section 6(c)(i), the City or the City-Affiliated Party will stop all work in the area of the discovery until: (A) ExxonMobil determines whether the Hazardous Materials discovered resulted from past or present Refinery-related operations; and (B) if so, the extent to which the Hazardous Materials will be remediated, if at all, under Section 6(d) below.

(d) Regarding any Hazardous Materials brought to ExxonMobil's notice under Section 6(c)(i) above that it determines were spilled, released, or discharged as a result of past or present Refinery-related operations, ExxonMobil will, in its sole discretion, determine the extent to which the Hazardous Materials will be remediated (i.e., removed, handled, stored, transported, and disposed), if at all, to enable the City to properly and lawfully perform its activities under Section 1(a) of this Agreement. If ExxonMobil determines that remediation is necessary, it will perform the remediation and pay the costs associated therewith. Notwithstanding the foregoing sentence, ExxonMobil has no obligation to the City to: (A) remediate, or pay for the remediation of, a Hazardous Materials release to the extent that it did not result from a past or present Refinery-related operation, or to the extent that the City or any City-Affiliated Party caused the release; or (B) pay for increased remediation costs arising from the failure of the City or the City-Affiliated Parties to perform their obligations under this Agreement with due care.

(e) The City agrees that all costs paid by ExxonMobil pursuant to Section 6(d) above (as well as all costs and expenses paid by ExxonMobil under the 1999 Agreement and the Amendment, including, but not limited to, any soil remediation costs associated with the Easement Property) will be subject to, and count towards, the $12,500,000 expenditure limit established under Section II(G)(3)(f) of the Amendment.

(f) The City agrees to promptly perform, at its sole cost and expense, any environmental remediation associated with spills, releases, or discharges of Hazardous Materials on the Access Property that are not the responsibility of ExxonMobil under Section 6(d) above. Any environmental remediation required of the City by this Section 6(f) must be performed in accordance with all applicable federal, state, and local laws and regulations. The City will provide ExxonMobil, for its review and approval, any plans, data, reports, or other documents prepared in connection with the City's obligations under this Section 6(f) before the City submits such documents to third-parties, including, without limitation, the City-Affiliated Parties or regulatory agencies.

(g) With respect to Section 6(f) above, the City will ensure that, to the extent permitted by law, all notifications or communications to regulatory agencies, as well as all documentation pertaining to remediation activities (including, but not limited to, hazardous waste generator identification numbers and hazardous waste manifests) will be in the name of the City or the City-Affiliated Parties, and not in the name of ExxonMobil or any of its Affiliates.

7. Warranty for Plan Review

ExxonMobil's review or approval of any plans or calculations submitted by the City to ExxonMobil will not relieve the City of responsibility for full compliance with contract

requirements, correctness of design drawings and details, proper fabrication and construction techniques, and coordination with other government and private permitting agencies, nor will such review or approval by ExxonMobil in any way relieve the City from, or otherwise modify, the City's indemnity and assumption of liability under Sections 2 and 3, respectively, of this Agreement. Execution of this Agreement does not imply design warranty on the part of ExxonMobil engineering employees. The parties expressly agree that ExxonMobil makes no warranty of any kind and assumes no responsibility therefor.

8. Survival of Representations, Warranties, and Indemnities

All representation, warranties, and indemnities of each Party to this Agreement will survive the termination of this Agreement.

9. Notices

Except as provided in Section 9(e) below, all notices, requests, demands, or other communications under this Agreement will be in writing and will be provided as follows:

(a) Notice will be sufficiently given for all purposes when provided as follows:

- (i) Personal Delivery. When personally delivered to the recipient: notice is effective upon delivery.
- (ii) First Class Mail. When mailed first class to the last address of the recipient known to the Party giving notice: notice is effective after three mail delivery days of being deposited in a United States Postal Service office or mailbox.
- (iii) Certified Mail. When mailed by certified mail, with return receipt requested: notice is effective upon receipt, if delivery is confirmed by a return receipt.
- (iv) Overnight Delivery. When delivered by an overnight delivery service, with charges prepaid or charged to sender's account: notice is effective upon delivery, if delivery is confirmed by the delivery service.
- (v) Facsimile Transmission. When sent by fax to the last fax number of the recipient known to the Party giving notice: notice is effective upon receipt or, if it is received after 5:00 p.m. (recipient's time) or on a non-business day, on the next business day.

(b) Except as provided in Section 9(e) below in the case of certain notifications to ExxonMobil, addresses for purpose of giving notice hereunder are as follows:

(i) EXXONMOBIL

Renato P. Villareal
EXXONMOBIL OIL CORPORATION
Torrance Refinery
3700 West 190th Street
Torrance, CA 90509-2929
Fax: (310) 212-1887

(ii) CITY

City Clerk
City of Torrance

3031 Torrance Boulevard
Torrance, California 90509-2970
Fax: (310) 618-2931

(c) Any correctly addressed notice that is refused, unclaimed, or undeliverable because of an act or omission of the Party to be notified will be deemed effective as of the first date the notice was refused, unclaimed or deemed undeliverable by the postal authorities, messenger, or overnight delivery service.

(d) Each Party must provide advance written notice to the other of any change to its contact information (i.e., address, telephone number, or fax number).

(e) For written notices under Section 6(c) above, the City will provide an immediate notification to ExxonMobil by electronic mail ("e-mail") that describes the circumstances under which the City or the City-Affiliated Parties discovered, spilled, released, or discharged the Hazardous Materials. The City will then submit to ExxonMobil within three (3) business days a follow-up notification by any method permitted under Section 9(a) above containing additional, relevant information about the Hazardous Materials. The addressee for both the e-mail and the follow-up notification is:

Renato P. Villareal
EXXONMOBIL OIL CORPORATION
Torrance Refinery
3700 West 190th Street
Torrance, CA 90509-2929
Fax: (310) 212-1887
renato.p.villareal@exxonmobil.com

10. Assignment

This Agreement will be binding upon the successors and assigns of the Parties. Neither Party may assign this Agreement without the prior written consent of the other.

11. Modification of the Agreement

This Agreement represents the entire understanding of the Parties as to those matters contained herein. No prior oral or written understanding will be of any force or effect with respect to this Agreement. This Agreement may not be modified or altered except in writing and signed by both Parties.

12. Conflict With Applicable Law

If any part of this Agreement is found to be in conflict with applicable laws or regulations, that part will be inoperative, null, and void insofar as it is in conflict; however, the remainder of the Agreement will remain in full force and effect.

13. Jurisdiction

This Agreement will be administered and interpreted under the laws of the State of California.

14. Waiver

The failure by one Party to enforce or require the other Party's full compliance with the terms and provisions of this Agreement will not constitute a waiver of its right to do so in the future, nor will it release the other Party from its responsibilities under this Agreement. A Party's consent to or approval of any act by the other Party, which act requires the first Party's consent or approval, will not be construed to waive or render unnecessary the first Party's consent to or approval of subsequent acts. A waiver of rights under this Agreement will only be valid if it is clearly set forth in writing.

15. Exhibits

All exhibits identified in this Agreement are hereby incorporated by this reference.

16. Authority to Execute

The persons executing this Agreement on behalf of each Party warrant that they are duly authorized to execute this Agreement.

17. Termination of Agreement

This Agreement will terminate and be of no further force or effect upon the earlier of: (i) the completion of the activities stated in Section 1 of this Agreement; (ii) execution of a Roadway Easement and/or Right of Way to the City pursuant to Section II(G)(4) of the Amendment; or (iii) the mutual agreement of the Parties to terminate this Agreement.

IN WITNESS WHEREOF, this Agreement has been executed, in duplicate, by the Parties and is effective as of the date first written above.

CITY OF TORRANCE
A Municipal Corporation

By: Frank Scotto
Frank Scotto, Mayor

Dated: 03-26-2009

EXXONMOBIL OIL CORPORATION
A New York Corporation

By: Maxwell Ocansey
Maxwell A. Ocansey, its Attorney-in-Fact

Dated: 04-01-2009

ATTEST:

By: _____
Sue Herbers, City Clerk

Dated: 03-26-2009

APPROVED AS TO FORM:
JOHN L. FELLOWS III
City Attorney

By: _____
Deputy City Attorney

Dated: 03-26-2009

EXHIBIT A

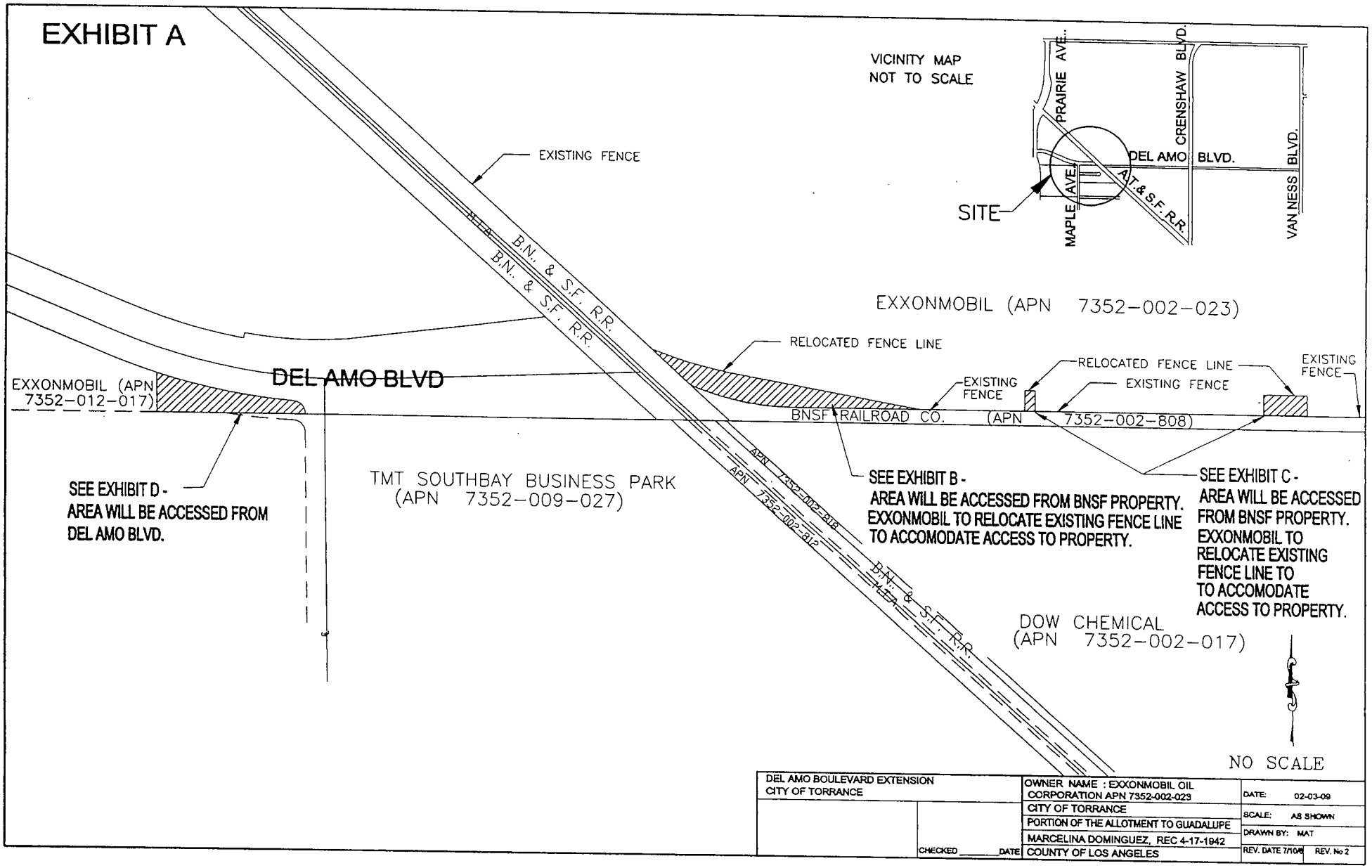

DEL AMO BOULEVARD EXTENSION CITY OF TORRANCE	OWNER NAME : EXXONMOBIL OIL CORPORATION APN 7352-002-023	DATE: 02-03-09	
	CITY OF TORRANCE	SCALE: AS SHOWN	
	PORTION OF THE ALLOTMENT TO GUADALUPE	DRAWN BY: MAT	
	MARCELINA DOMINGUEZ, REC 4-17-1942	REV. DATE 7/10/08	REV. No 2
CHECKED _____ DATE	COUNTY OF LOS ANGELES		

EXHIBIT B

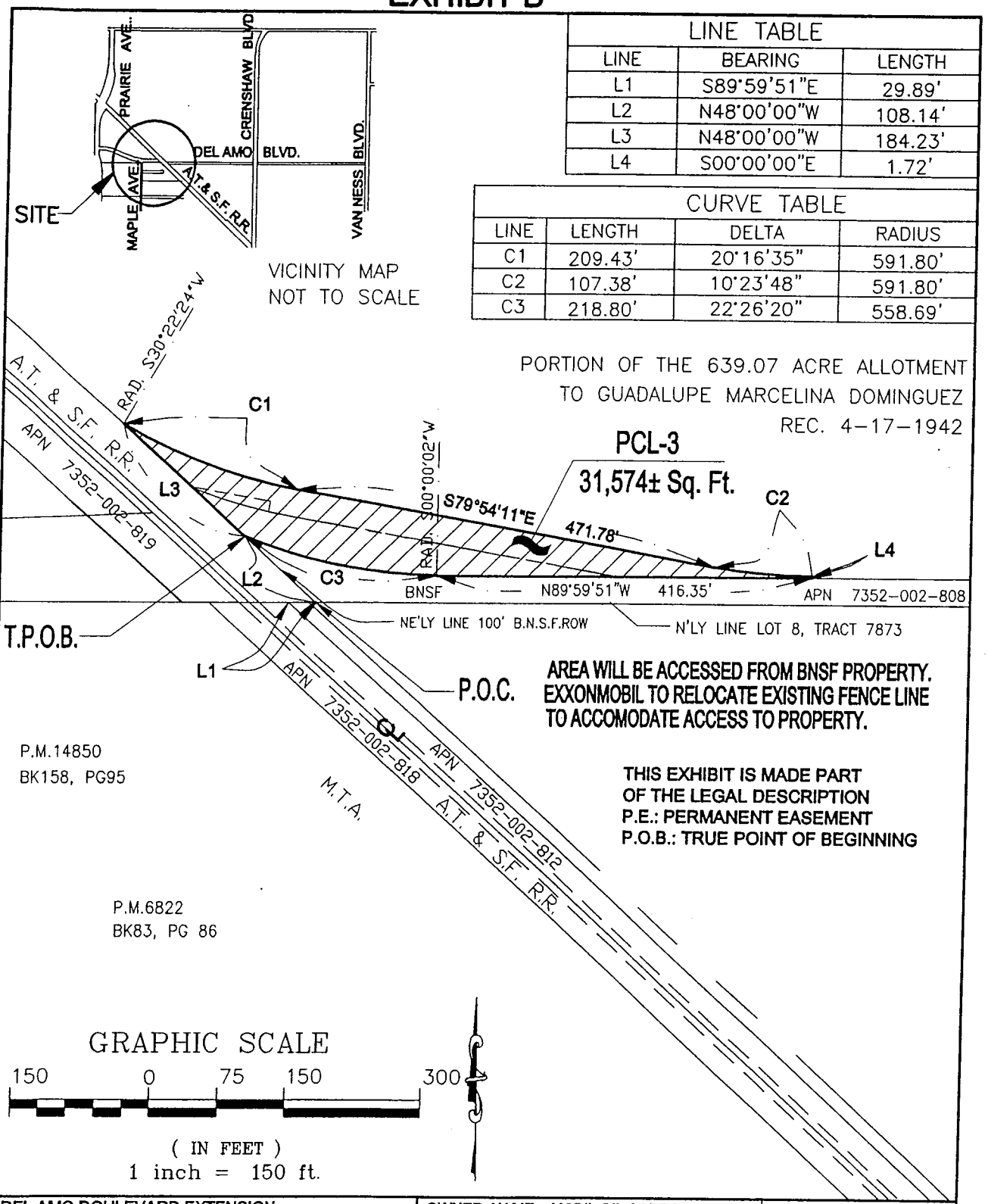

LINE TABLE		
LINE	BEARING	LENGTH
L1	S89°59'51"E	29.89'
L2	N48°00'00"W	108.14'
L3	N48°00'00"W	184.23'
L4	S00°00'00"E	1.72'

CURVE TABLE			
LINE	LENGTH	DELTA	RADIUS
C1	209.43'	20°16'35"	591.80'
C2	107.38'	10°23'48"	591.80'
C3	218.80'	22°26'20"	558.69'

PORTION OF THE 639.07 ACRE ALLOTMENT
TO GUADALUPE MARCELINA DOMINGUEZ
REC. 4-17-1942

AREA WILL BE ACCESSED FROM BNSF PROPERTY. EXXONMOBIL TO RELOCATE EXISTING FENCE LINE TO ACCOMODATE ACCESS TO PROPERTY.

THIS EXHIBIT IS MADE PART OF THE LEGAL DESCRIPTION
P.E.: PERMANENT EASEMENT
P.O.B.: TRUE POINT OF BEGINNING

DEL AMO BOULEVARD EXTENSION CITY OF TORRANCE		OWNER NAME : MOBIL OIL CORPORATION APN 7352-002-023	DATE: 07-21-06
Paragon Partners Ltd. 5762 Bolsa Avenue, Ste. 201 Huntington Beach, CA 92649	CHECKED _____ DATE	CITY OF TORRANCE PORTION OF THE ALLOTMENT TO GUADALUPE MARCELINA DOMINGUEZ, REC 4-17-1942 COUNTY OF LOS ANGELES	SCALE: AS SHOWN DRAWN BY MAT REV. DATE / REV. No

EXHIBIT C

VICINITY MAP
NOT TO SCALE

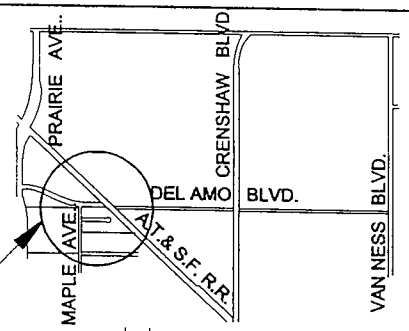

LINE TABLE		
LINE	BEARING	LENGTH
L1	S89°59'51"E	29.89'

CURVE TABLE			
LINE	LENGTH	DELTA	RADIUS
C1	218.80'	22°26'20"	558.69'

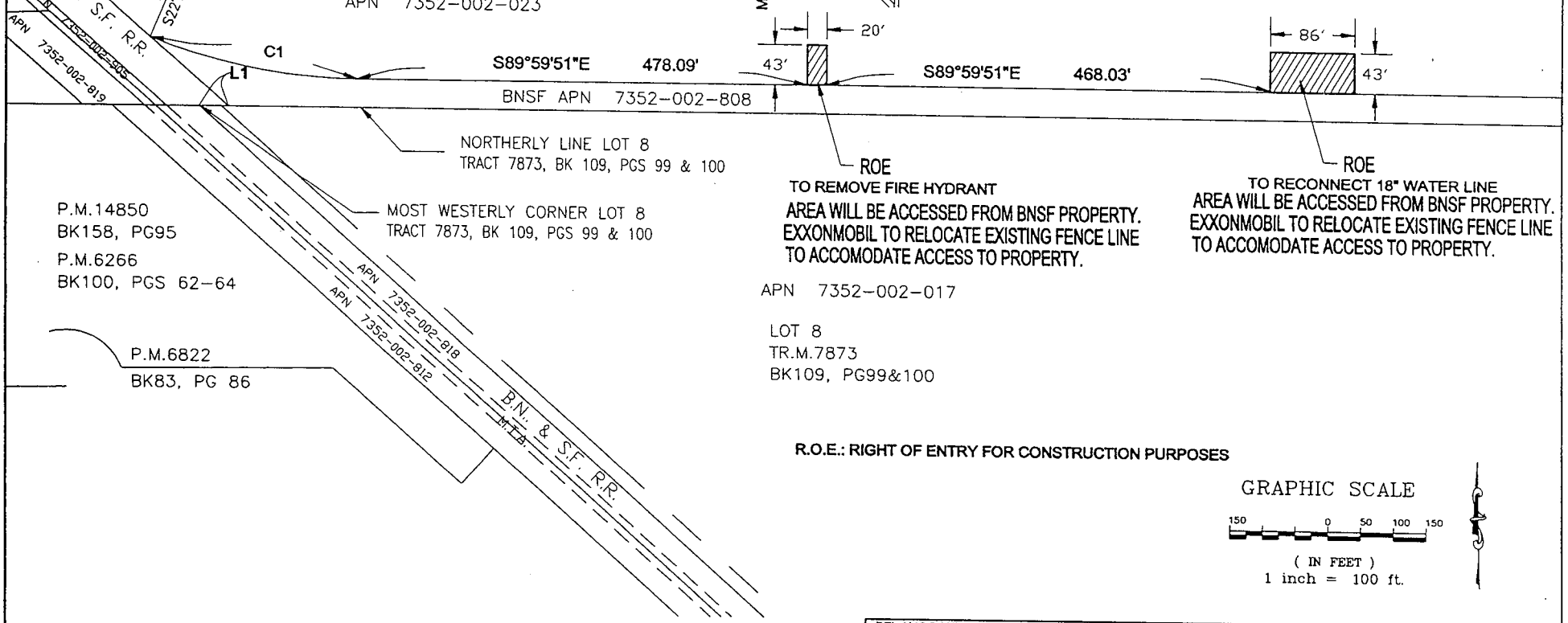

R.O.E.: RIGHT OF ENTRY FOR CONSTRUCTION PURPOSES

GRAPHIC SCALE

150 0 50 100 150

(IN FEET)
1 inch = 100 ft.

DEL AMO BOULEVARD EXTENSION CITY OF TORRANCE	OWNER NAME : MOBIL OIL CORPORATION APN 7352-002-023	DATE: 02-03-09	
	CITY OF TORRANCE	SCALE: AS SHOWN	
	PORTION OF THE ALLOTMENT TO GUADALUPE	DRAWN BY: MAT	
	MARCELINA DOMINGUEZ, REC 4-17-1942	REV. DATE 7/10/09	REV. No 2
CHECKED _____ DATE	COUNTY OF LOS ANGELES		

EXHIBIT D

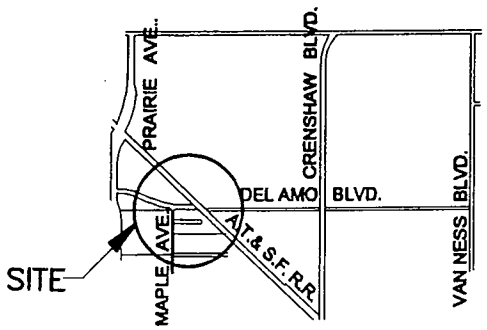

VICINITY MAP
NOT TO SCALE

LINE TABLE		
LINE	BEARING	LENGTH
L1	N00°00'25"W	81.71'
L2	S00°33'40"E	3.14'

CURVE TABLE			
LINE	LENGTH	DELTA	RADIUS
C1	282.47'	12°57'36"	1,250.0'
C2	37.05'	84°54'27"	25.00'

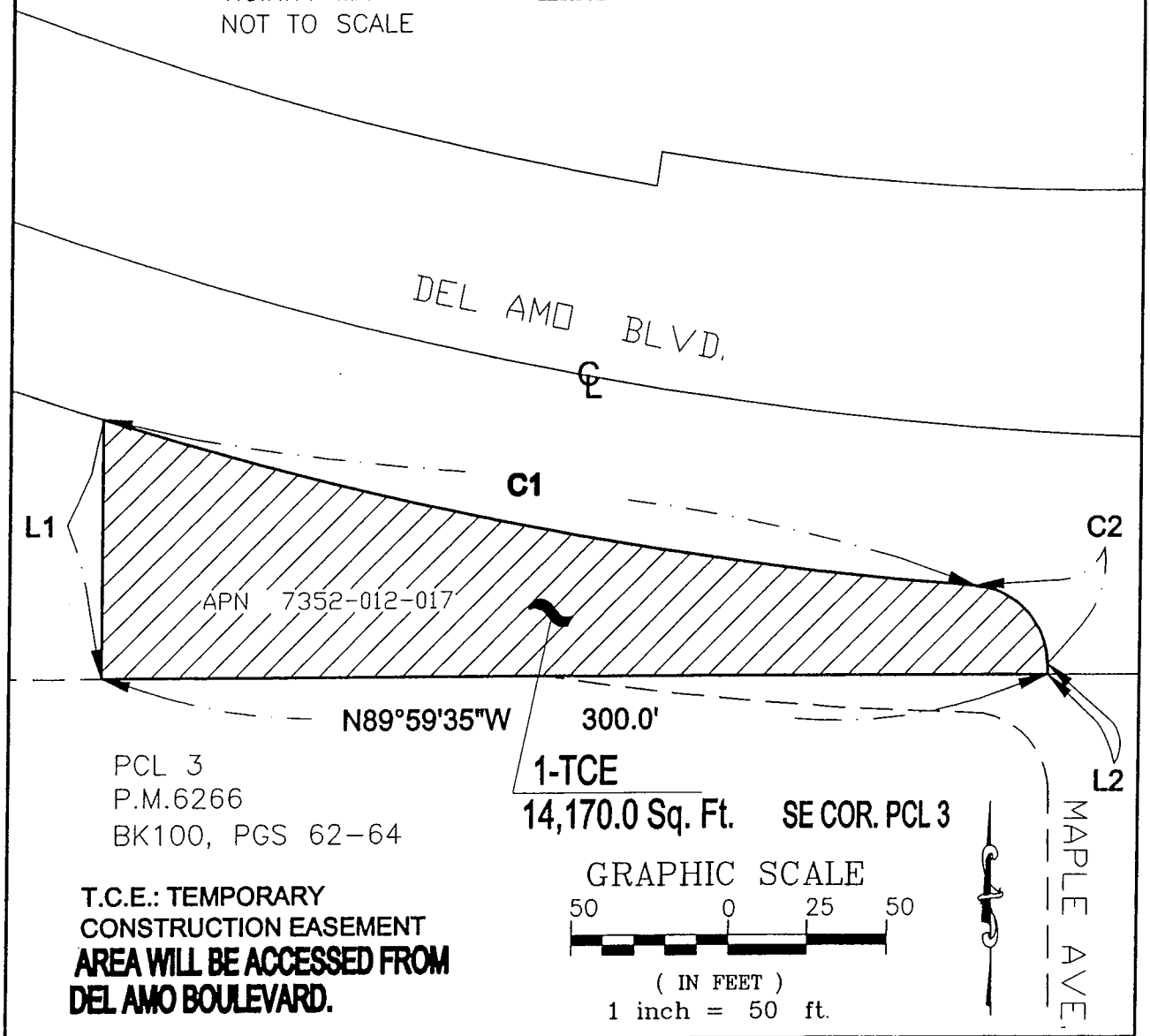

PCL 3
P.M.6266
BK100, PGS 62-64

1-TCE
14,170.0 Sq. Ft. **SE COR. PCL 3**

T.C.E.: TEMPORARY CONSTRUCTION EASEMENT
AREA WILL BE ACCESSED FROM DEL AMO BOULEVARD.

DEL AMO BOULEVARD EXTENSION CITY OF TORRANCE		OWNER NAME : MOBILE CALIFORNIA EXPLORATION CORP. APN 7352-012-017	DATE: 03-23-06
Paragon Partners Ltd. 5762 Bolsa Avenue, Ste. 201 Huntington Beach, CA 92649	CHECKED _____ DATE	CITY OF TORRANCE PORTION OF PCL. 3, P.M. 6266 BK 100, PGS 61 & 64 COUNTY OF LOS ANGELES	SCALE: AS SHOWN DRAWN BY REV. DATE / REV. No

APPENDIX XVIII

MCImetro ACCESS TRANSMISSION SERVICE, LLC

REIMBURSEMENT AGREEMENT

DEL AMO BLVD EXTENSION, T-30

REIMBURSEMENT AGREEMENT
MCImetro ACCESS TRANSMISSION SERVICES LLC

The Table below summarizes information and requirements from the above-referenced Agreement between the City and MCImetro Access Transmission Services, LLC. The purpose is to inform a prospective Bidder and Contractor.

Paragraph 6	☐ Perform no work within 10 feet on either side of existing MCImetro facilities until Project(removal of facilities) has been completed.
Paragraph 8	☐ Give written notice to MCImetro at least 48 hours (excluding Saturday, Sunday, and legal holidays) in advance of commencement of work in immediate permitted area ☐ In emergency, provide telephonic notice to MCImetro at 1-800-MCI-WORK upon discovery of emergency.

RECEIVED

JUL 13 2009

Public Works Department

RECEIVED

JUL 15 2009

Public Works Department

Project No. 999095

REIMBURSEMENT AGREEMENT

THIS REIMBURSEMENT AGREEMENT ("Agreement") is made and entered into this 6 day of ~~June~~ July, 2009, by and between **MCImetro ACCESS TRANSMISSION SERVICES LLC**, a Delaware limited liability company ("MCImetro"), having an address at 2400 North Glenville Drive, Richardson, Texas 75082, and the **CITY of TORRANCE**, a municipal corporation ("Reimbursor"), having an address at City Clerk 3031 Torrance Boulevard, Torrance, California 90503. The signatories to this Agreement shall be referred to individually as a "Party" and collectively as the "Parties".

WITNESSETH:

WHEREAS, Reimbursor is constructing, reconstructing, crossing, or otherwise changing a portion of the (BNSF) easement or right-of-way at Crenshaw Boulevard which requires the protection or relocation of MCImetro facilities along, over and/or under said easement or right-of-way;

WHEREAS, as a result of Reimbursor's construction activity, Reimbursor has requested MCImetro to relocate or protect a portion of its facilities without cost or risk to MCImetro; and

WHEREAS, MCImetro, under the terms hereinafter stated, is willing to undertake such relocation or protection of its facilities (the "Project") solely in order to accommodate Reimbursor, provided Reimbursor reimburses MCImetro for all of its costs, both direct and indirect, associated with the Project.

NOW THEREFORE, in consideration of the foregoing and of the mutual promises and covenants herein contained, the Parties agree as follows:

1. Reimbursor agrees that Exhibit A, attached hereto and made a part hereof, represents the scope of work for the Project.

2. Reimbursor may, at its own expense, inspect construction MCImetro performs in connection with the Project.

3. Reimbursor agrees to bear all direct and indirect costs incurred by MCImetro and relating to any construction by MCImetro in connection with the Project, including, but not limited to, labor, materials, construction, damages, administrative overhead, taxes, travel expenses, legal fees and other reasonable out of pocket expenses. Reimbursor waives any and all delay damage claims, except if caused solely by the gross negligence or willful misconduct of MCImetro.

4. The total cost of the Project is estimated to be Ten Thousand, Seven Hundred Thirty-Two Dollars ($10,732.00), as detailed in Exhibit B, attached hereto and made a part hereof. Reimbursor acknowledges and agrees that this amount is an estimate and shall not be construed as limiting the amount MCImetro is to be reimbursed by Reimbursor under this Agreement. MCImetro shall provide notice to Reimbursor when MCImetro becomes aware that actual costs will exceed the estimate by more than ten percent (10%). MCImetro may, in its sole discretion, submit to Reimbursor an itemized invoice for actual Project costs not more often than monthly. Reimbursor shall pay the full amount billed within thirty (30) days following receipt of the invoice from MCImetro.

5. Following completion of the Project, MCImetro shall make an accounting of final, unpaid, actual costs of the Project and provide Reimbursor with a copy of the accounting and an itemized invoice therefor. Reimbursor shall pay the full amount billed within thirty (30) days after receipt of the invoice from MCImetro.

6. Reimbursor shall perform no work within ten feet (10') on either side of the existing MCImetro facilities located within the right-of-way until the Project has been completed.

7. The obligations of MCImetro are subject to force majeure and MCImetro shall not be in default of this Agreement if any failure or delay in performance is caused by strike or other labor problems; accidents; acts of God; fire; flood; adverse weather conditions; material or facility shortages or unavailability; lack of transportation; the imposition of any governmental

C2009-104

COPY

codes, ordinances, laws, rules, regulations or restrictions, including, without limitation, the necessity of obtaining permits or environmental assessments or environmental approvals; condemnation or the exercise of rights of eminent domain; war, civil disorder or acts of terrorism; or any other cause beyond the reasonable control of MCImetro.

8. Reimbursor shall give written notice to MCImetro at least forty-eight (48) hours, excluding Saturday, Sunday and legal holidays, in advance of commencement of any work in the immediate permitted area, subject to the limitations set forth in Paragraph 6. The notice shall be given to those individuals listed on the Contact Sheet of Exhibit A. In the event of an emergency, Reimbursor shall provide telephonic notice to MCImetro at 1-800-MCI-WORK upon Reimbursor's discovery of the emergency.

9. This Agreement supersedes every antecedent or concurrent oral and/or written declaration and/or understanding by and between MCImetro and Reimbursor pertaining to the Project.

10. The terms of this Agreement shall be binding upon and inure to the benefit of the Parties and their respective successors and assigns.

11. Each Party warrants that it has the full right and authority to enter into this Agreement. All necessary approvals and authority to enter into this Agreement have been obtained and the person executing this Agreement on behalf of each Party has the express authority to do so and, in so doing, to bind such Party hereto.

IN WITNESS WHEREOF, the Parties have executed this Agreement as of the day and year first above written.

REIMBURSOR

By: _____
Name: Robert J. Beste
Title: Public Works Director

Tax ID#: 95-6000803

Telephone: (310)618-3054

Email address: cbilezerian@torrnet.com

Billing Contact:
Name: Craig Bilezerian
Address: City of Torrance
Public Works Department
20500 Madrona Avenue
Torrance, CA 90503

LeRoy J. Jackson, City Manager

APPROVED AS TO FORM:
JOHN L. FELLOWS III
City Attorney

By: _____

MCImetro ACCESS TRANSMISSION SERVICES LLC

By: _____
Name: Marty Hersh
Title: Group Mgr. Reg. Eng. And Const.
July 6, 2009

999095
Torrance, CA Del Amo Extension
EXHIBIT A

BACKGROUND

The City of Torrance has plans to close a gap in Del Amo Blvd between Crenshaw Blvd and Maple Ave. These plans will impact existing MCImetro facilities along the BNSF ROW.

SCOPE OF WORK

This work consists of removing existing aerial cable and poles to accommodate the City's project. Approximately 2,500 feet of Figure-8 copper screened cable will be removed along with approximately five deteriorated wood poles. As this section of plant is currently out of service no replacement facilities will be installed. If in the future this section of plant is needed MCImetro reserves the right to have new facilities placed at that time to close the gap.

All facilities that will be removed have no salvage value due to the integrated steel messenger and excessive amount of PVC in the cable and the age of the poles (old WU possibly from the 1920's).

"It is understood that said highway is a federal-aid highway and accordingly, 23 CFR 645 is hereby incorporated into this Agreement."

CONTACTS

Verizon Business/MCI:

Brandon Jacome – Regional Manager
1740 Creekside Oaks Dr, Suite 200
Sacramento, CA 95833
916-569-5895 office
925-457-6721 mobile
brandon.jacome@verizonbusiness.com

Don Beckermann – Construction Manager
115 W. Palmetto Dr.
Pasadena, CA 91105-2511
626-666-3526 office
626-676-9023 mobile
don.beckermann@verizonbusiness.com

City of Torrance.

Lauren Sablan – Associate Civil Engineer
20500 Madrona Ave
Torrance, CA 90503
310-618-6259 office
310-781-6902 fax
lsablan@torrnet.com

Transmission Systems Construction
R&U Project Budget

5/30/2009

EXHIBIT B

Project #: 999095 **Revision:** 1
Title: TORRANCE, CA DEL AMO EXTENSION
Site Code: LKNCCA

Date Prepared: 5/26/2009
Engineer: BECKERMANN, DON
Lead Engineer:

Capital Project:
Capital Prj. Title:
Regen/Regen Spans:

City: TORRANCE
State: California
Footage: 3500

TIME FRAME

ESTIMATED ENGINEERING TIME: (DAYS)

Engineering: 7
Drafting:
As Built Doc.
TIME FRAME TOTAL:

ESTIMATED CONST. TIME: (DAYS)

Construction:
TIME FRAME TOTAL:

SCHEDULE

Investigation#:
Disposition: Refund

Eng. Start:
Eng.

Construction Start: 9/14/2009
Construction Complete: 10/31/2009

SUMMARY OF ESTIMATED COSTS

A)	ENGINEERING	$3,428.00
B)	INSPECTION SERVICES	$864.00
C)	MCI FURNISHED MATERIALS	$0.00
D)	CONTRACTOR UNIT PRICE SCHEDULE	$6,440.00
E)	SPLICING LABOR	$0.00
F)	SUBTOTAL	$10,732.00
G)	OVERHEAD - 20% OF ITEMS A-C & E	$0.00
H)	OVERHEAD - 5% OF ITEM D	$0.00
I)	TOTAL - LOADED PROJECT COST	$10,732.00

ENGINEERING

	REF DESCRIPTION	QTY	UNIT $	EXT. $
1)	Engineer Days (Internal)	2	$864.00	$1,728.00
2)	Engineer Days (External)	5	$340.00	$1,700.00
	ENGINEERING Sub TOTAL			$3,428.00

Lead Engineer: _____ **Date:** _____

INSPECTION SERVICE

	REF DESCRIPTION	DAYS	QTY	UNIT $	EXT. $
3)	MCI TSO FE (Monitor)	1	1	$864.00	$864.00
	INSPECTION SERVICES Sub TOTAL				$864.00

Addendum to Unit Price Schedule

	REF DESCRIPTION	UNITS	QTY	UNIT $	EXT. $
59)	MCC Estimate	LS	1	$6,440.00	$6,440.00
	CONTRACTOR UNIT PRICE Sub TOTAL				$6,440.00

APPENDIX XIX

TMT SOUTHBAY BUSINESS PARK

AGREEMENT FOR CONVEYANCE OF PROPERTY

DEL AMO BLVD EXTENSION, T-30

AGREEMENT FOR CONVEYANCE OF PROPERTY
TMT South Bay Business Park, Inc

The Table below summarizes information and requirements from the above-referenced Agreement between the City and TMT South Bay Business Park, Inc. The purpose is to inform a prospective Bidder and Contractor.

Sec. 3.2 B	☐ No equipment shall remain on the easement area overnight ▪ Unless within protected work area equipped with traffic control devices ☐ Must provide no less than 30 days notice before entering Parcel ("Commencement Date" – date of initial entry) ☐ Temporary Construction Easement shall be terminated 75 days after Commencement Date. Unless: ▪ Additional time is needed for removal & disposal of Hazardous Materials ▪ Extended by mutual agreement of both parties
Sec. 4 (e)	☐ If Grantee discovers Hazardous Materials and removal/disposal is required, then Grantor shall be solely responsible for removal (up to a maximum cost of $2,000)
Sec. 4 (f)	☐ If Grantor fails to remove and dispose Hazardous Materials, Grantee shall have the right to remove & dispose said Hazardous Materials. ▪ Entitled to be reimbursed by Grantor of maximum amount of $2,000 within 60 days after being invoiced by Grantee. ☐ If Grantor's cost is proposed to exceed $2,000, Grantor shall inform Grantee in writing prior to Grantor expending funds relate to removal and disposal ▪ Grantee (or its designee) will then have the right to remove and dispose of Hazardous Materials at Grantee's cost & expense.
Sec. 5 A	☐ Shall repair any improvements or land belonging to Grantor, damaged by Grantee (or Contractor) during construction or by choice, pay to Grantor the market value of improvements. ☐ Must provide Grantor written notice no less than 48 hours prior to entering the land to repair and/or restore any damages.
Sec. 5 B	☐ Shall indemnify Grantor, due to: ▪ Entry on Property by Grantee, its agents, employees or contractors. ▪ Acts or omissions of Grantee or Grantee's contractor
Sec. 5 B	☐ Shall diligently proceed with its construction of permanent improvements ▪ Failure to complete construction within 75 calendar days of commencement of work on property: Must pay Grantor $250 for each day of continued work.

AGREEMENT
FOR CONVEYANCE OF PROPERTY

THIS AGREEMENT is entered into by and between TMT South Bay Business Park, Inc., a Delaware Corporation ("Grantor") and the City of Torrance, a municipal corporation ("Grantee"). Grantor and Grantee are each sometimes individually referred to herein as a "Party" and collectively as the "Parties."

RECITALS

A. Grantor owns certain real property located at 2807 Oregon Court, City of Torrance, County of Los Angeles, California, bearing Assessor Parcel No. 7352-009-027 (the "Property").

B. Grantee desires to purchase: a) a non-exclusive Permanent Utility Easement as described in Exhibit "B" and depicted in Exhibit "B" attached hereto and made a part hereof (the "Permanent Utility Easement"); and b) a non-exclusive Temporary Construction Easement as depicted in Exhibit "A" attached hereto and made a part hereof, (the "Temporary Construction Easement"; together with the Permanent Utility Easement, the "Parcel") on a portion of the Property and Grantor desires to sell and convey the Parcel.

C. The Parties desire by this Agreement to provide the terms and conditions for the purchase and sale of the Parcel.

AGREEMENT

The Parties therefore agree as follows:

1. PURCHASE.

Grantee agrees to buy and Grantor agrees to sell and convey the Parcel for the purchase price and upon the terms and conditions hereinafter set forth. The Purchase Price, defined below, is acknowledged by both Parties to be the fair market value for the Parcel.

2. ESCROW.

Upon execution of this Agreement by all Parties, Grantee shall open an escrow (the "Escrow") with Fidelity National Title Company (the "Escrow Holder") for the purpose of consummating the purchase and sale of the Parcel. The Parties hereto shall execute and deliver to Escrow Holder such escrow instructions prepared by Escrow Holder as may be required to consummate this transaction (the "Escrow Instructions"). Any such instructions shall not conflict with, amend, or supersede any provision of this Agreement. If there is any inconsistency between such instructions and this Agreement, this Agreement shall control unless the Parties agree in writing otherwise. The Escrow Instructions shall include the following terms and conditions of sale:

2.1 Purchase Price.

The total purchase price for the Parcel shall be the sum of Fifty Six Thousand and no/100 ($56,000.00) which shall be paid by Grantee to Grantor through Escrow Holder in cash at Close of Escrow.

2.2 Close of Escrow.

Escrow shall close on or before ninety (90) days following the execution of this Agreement (the "Close of Escrow"). If the Escrow is not in a condition to close by the Close of Escrow, any Party who is not then in default may, in writing, demand the return of its money and/or documents. Thereupon, subject to the provisions in paragraph 3, all obligations and liabilities of the Parties under this Agreement shall cease and terminate. If no such demand is made, the City Manager of Grantee may, by written instrument to Escrow Holder, authorize an extension of the Escrow Holder. Escrow shall be closed as soon as possible.

2.3 Condition of Title to the Parcel.

Grantor shall convey title to the non-exclusive Permanent Utility Easement referenced in paragraph B of the Recitals above (a portion of the Parcel) to Grantee as evidenced by a CLTA Standard Form Policy or Binder of Title Insurance ("Title Policy") issued by a title insurance company to be selected by Grantee in an amount equal to the Purchase Price. The Title Policy shall show as exceptions with respect to the Parcel only matters approved in writing by Grantee. Any exceptions to title representing monetary liens or encumbrances (other than current taxes and assessments) are hereby disapproved by Grantee, and Escrow Holder is hereby authorized and instructed to cause the reconveyance, partial reconveyance, or subordination, as the case may be, of any such monetary exceptions (other than current taxes and assessments) to Grantee's title to the Parcel at or prior to the Close of Escrow. If Grantee objects to any of the exceptions to title other than monetary liens or encumbrances (excluding current taxes and assessments), Grantee's sole remedy shall be to terminate this Agreement upon Grantee's written notice to Grantor. Upon Grantor's receipt of such notice of termination, all obligations and liabilities of the Parties under this Agreement, except for Section 2.5(c) and the obligations of Grantee under Section 5, shall cease and terminate.

2.4 Escrow and Closing Costs.

Grantee shall pay the cost of the Title Policy, all Escrow fees (including reconveyance fees, trustee's fees or forwarding fees for any partial reconveyance or subordination of a deed of trust or mortgage), and all recording costs incurred herein. All Parties acknowledge that Grantee is exempt from payment of documentary transfer taxes.

2.5 Investigations.

A. Prior to the Close of Escrow, Grantee may, at its option, conduct, at Grantee's sole cost and expense, testing of the soil within the boundaries of the Permanent Utility Easement area to a depth of no deeper than one (1) foot below the proposed location of the water pipelines, which are currently contemplated to be located at six (6) feet underground. Grantee shall have the right, at its option, to conduct, at Grantee's sole cost and expense, investigations, inspections, surveys, and tests of the Permanent Utility Easement area including, without limitation, soils (other than the testing of the soils described above), groundwater, wells, percolation, geology, environmental, drainage, engineering and utilities investigations, inspections, surveys, and tests to determine the suitability of the Parcel for Grantee's intended use thereof, provided that Grantee has obtained Grantor's prior written consent, which consent may be given or withheld in Grantor's sole and absolute discretion. If Grantee determines that the Parcel is not suitable for its intended use, Grantee may disapprove this item and

terminate this Agreement as provided at Section 2.2 above. Grantee's approval of any of such investigations, inspections, surveys, or tests shall not alter or diminish Grantor's representations or warranties under this Agreement, and Grantor acknowledges and agrees that Grantee is relying upon Grantor's representations and warranties made herein, unless such representation or warranty is specifically waived in whole or in part by Grantor.

B. Subsequent to Close of Escrow, Grantee may, at its option, conduct, at Grantee's sole cost and expense, testing of the soil within the boundaries of the Permanent Utility Easement area to a depth of no deeper than one (1) foot below the proposed location of the water pipelines, which are currently contemplated to be located at six (6) feet underground. Grantee shall have the right, at its option, to conduct, at Grantee's sole cost and expense, investigations, inspections, surveys, and tests of the Permanent Utility Easement area including, without limitation, soils (other than the testing of the soils described above), groundwater, wells, percolation, geology, environmental, drainage, engineering and utilities investigations, inspections, surveys, and tests to determine the suitability of the Parcel for Grantee's intended use thereof, provided that Grantee has obtained Grantor's prior written consent, which consent may be given or withheld in Grantor's sole and absolute discretion. If Grantee determines that the Parcel is not suitable for its intended use subsequent to the Close of Escrow, Grantee may disapprove this item and terminate this Agreement as provided at Section 2.2 above. If Grantee elects to terminate this Agreement after the Close of Escrow, Grantee shall reconvey the Parcel to Grantor at no cost to Grantor, and the Parcel shall be subject to only the title exceptions existing on the date the Parcel was conveyed to Grantor. Grantee's approval of any of such investigations, inspections, surveys, or tests shall not alter or diminish Grantor's representations or warranties under this Agreement, and Grantor acknowledges and agrees that Grantee is relying upon Grantor's representations and warranties made herein, unless such representation or warranty is specifically waived in whole or in part by Grantor.

C. In connection with any investigations or testing being performed pursuant to Sections 2.5(A) and 2.5(B), Grantor hereby grants to Grantee, and Grantee's employees, representatives, agents and independent contractors, a license to enter the Property for purposes of conducting such investigations, inspections, surveys, and tests, provided that:

i. In connection with any entry by Grantee, or its agents, employees or contractors onto the Parcel, Grantee shall give Grantor reasonable advance notice of such entry and shall conduct such entry and any inspections in connection therewith (a) during normal business hours, (b) so as to minimize, to the greatest extent possible, interference with Grantor's business and the business of Grantor's tenants, (c) in compliance with all applicable laws, and (d) otherwise in a manner reasonably acceptable to Grantor.

ii. All tests and investigations described in this Section 2.5 shall be performed only by reputable contractors and subcontractors who are licensed in the State of California. All such work shall be performed in accordance with all Laws and in a good and workmanlike manner.

iii. Grantee shall maintain, and shall assure that its contractors maintain, public liability and property damage insurance in amounts (but in no event less than Two Million Dollars ($2,000,000) with respect to any liability insurance) and in form and substance adequate to insure against all liability of Grantee and its agents, employees or contractors, arising out of any entry or inspections of the Property pursuant to the provisions hereof, and Grantee shall provide Grantor with evidence of such insurance coverage prior to any entry on the Property.

iv. Grantee shall repair any damage to the Property resulting from such investigations, inspections, surveys, and tests conducted by Grantee or Grantee's employees, representatives, agents or independent contractors at Grantee's sole cost and expense. Grantee shall

repair any damage on or before a date that is mutually agreed upon by both the Grantor and Grantee. The Grantee's obligations under this Section 2.5(C)(iv) shall survive beyond the Close of Escrow, or, if the sale is not consummated, beyond the termination of this Agreement.

v. Notwithstanding anything to the contrary contained herein, Grantee shall not contact any governmental authority or any tenant without first obtaining the prior written consent of Grantor thereto in Grantor's sole discretion, and Grantor, at Grantor's election, shall be entitled to have a representative participate in any telephone or other contact made by Grantee to a governmental authority or tenant and present at any meeting by Grantee with a governmental authority or tenant, unless Grantee is required by law to disclose any conditions of the Parcel discovered by Grantee in connection with Grantee's investigations, testing or work on the Parcel, in which case, Grantee may contact the appropriate governmental authority, provided that (1) Grantee shall notify Grantor of such conditions prior to contacting such governmental authority, and (2) Grantee shall give Grantor a reasonable period of time to analyze the conditions and to determine the form and contents of the required disclosure. Nothing in this Section 2.5(C)(v) shall limit Grantee's obligation to obtain Grantor's consent, which consent may be given or withheld in Grantor's sole and absolute discretion, prior to any testing and investigations performed on the Parcel as provided in Section 2.4 (A) and Section 2.5(B).

2.6 Deposit of Funds and Documents.

A. Prior to Close of Escrow, Grantee shall deposit into Escrow (i) all Escrow and Closing Costs as described above; (ii) the Purchase Price to be paid to Grantor through Escrow; and (iii) such other documentation as is necessary to close Escrow in conformance herewith.

B. Prior to the Close of Escrow, Grantor shall deposit into Escrow (i) a properly executed Grant of Utility Easement Deed for the non-exclusive permanent utility easement in the form of Exhibit "C" attached hereto and made a part hereof, (ii) a non-exclusive Temporary Construction Easement in the form of Exhibit "D" attached hereto and made a part hereof, and (iii) such other documents, if any, as are necessary to close Escrow in conformance herewith.

2.7 Grantee's Conditions Precedent to Close of Escrow.

The Close of Escrow is subject to the following conditions:

(a) All representations and warranties of Grantor set forth in this Agreement shall be true and correct as of the Close of Escrow; and

(b) Grantor shall timely perform all obligations required by the terms of this Agreement to be performed by it.

2.8 Grantor's Conditions Precedent to Close of Escrow.

For the benefit of Grantor, the Close of Escrow shall be conditioned upon the timely performance by Grantee of all obligations required of Grantee by the terms of this Agreement.

3. THE PARCEL.

3.1 Possession of the Parcel.

Grantor hereby agrees that Grantee may take possession of the Parcel and begin construction of the works of improvement thereon as of the date of execution of this Agreement, prior to the Close of Escrow; if escrow should not close for any reason, or under the conditions specified in paragraph 2.2, or in paragraph 7, or in any other paragraph hereunder, Grantee shall have the right to continue in possession and construct the works of improvement, and the purchase price and terms shall be determined by agreement of the Parties, or absent an agreement, by a form of arbitration agreed to by the Parties, or if they cannot so agree, then Grantee may in its sole discretion, initiate an action in eminent domain in which the issue will be to determine the amount of compensation to be paid. If Grantee chooses not to continue with construction of the works of improvement, Grantee shall then immediately restore any and all areas affected by said construction to the condition which existed prior to beginning of said constriction. Upon completion of the restoration to the satisfaction of Grantor, this Agreement shall automatically terminate.

3.2 Use of the Parcel.

A. Grantee shall use the non-exclusive Permanent Utility Easement for the purposes of establishing, using and maintaining two separate subsurface water pipelines through portion of the property covered by the Permanent Utility Easement. Grantor shall also grant to grantee (and its successors in title) the non-exclusive right to access the Permanent Utility Easement area for the purpose of use, installation, repair, maintenance and replacement of such pipelines.

B. The non-exclusive Temporary Construction Easement shall be for the use of Grantee in connection with the construction and installation of two subsurface water pipelines within the portion of the property covered by the non-exclusive Permanent Utility Easement, including storing of materials and equipment, provided that no equipment shall remain on the easement area overnight unless it is contained within a protected work area that is equipped with traffic control devices. Grantor shall also grant to Grantee the right to remove and/or replace pavement and soil within the Temporary Construction Easement and the right to use the Temporary Construction Easement for ingress and egress in connection with such construction and installation. Grantee shall provide Grantor with not less than thirty (30) days prior notice before initial entry onto the Parcel (such date of initial entry, the "Commencement Date"). The non-exclusive Temporary Construction Easement shall commence on the Commencement Date and shall terminate seventy-five (75) days thereafter, unless (i) additional time is needed for the removal and disposal of Hazardous Materials, contaminated soil and/or water in accordance with the provisions in this Agreement and/or (ii) extended by mutual agreement of Grantor and Grantee.

4. REPRESENTATIONS AND WARRANTIES OF GRANTOR.

Grantor makes the following representations and warranties, each of which shall survive the Close of Escrow to the extent provided below:

(a) The execution and delivery of this Agreement by Grantor, Grantor's performance hereunder, and the consummation of this transaction will not constitute a violation of any order or decree or result in the breach of any contract or agreement to which Grantor is at present Parties, or by which Grantor is bound; other than

(b) Grantor will not enter into any agreements or undertake any new obligations prior to Close of Escrow which will in any way burden, encumber or otherwise affect the Property without the prior written consent of Grantee;

(c) To Grantor's knowledge, as defined below, no litigation and no governmental, administrative or regulatory act or proceeding regarding the environmental, health and safety aspects of the Property is pending;

(d) To Grantor's knowledge, Grantor has not received any written notice that the Property is in violation of any federal, state or local statute, regulation or ordinance relating to industrial hygiene or to environmental conditions on, under or about the Property, including, but not limited to, soil and groundwater conditions underlying the Property which could affect the Parcel or its use.

(e) If, in connection with any investigations or testing performed in accordance with Section 2.5, Grantee discovers Hazardous Materials, contaminated soil and/or water in, on or under the Property and it is required by either federal, state or local requirements to remove and dispose of said Hazardous Materials, contaminated soil and/or water, Grantor shall be solely responsible for the removal and disposal of any and all such Hazardous Materials, contaminated soil and/or water up to a maximum cost of two thousand ($2,000.00) dollars.

(f) In the event Grantor fails to remove and dispose of said Hazardous Materials, contaminated soil and/or water on or before a date that is mutually agreed upon by both Grantor and Grantee, Grantee or its designee shall have the right to remove and dispose of said Hazardous Materials, contaminated soil and/or water at Grantee's cost and expense, however, Grantee is entitled to be reimbursed by Grantor of a maximum amount of two thousand ($2,000.00) dollars within sixty (60) days after being invoiced by Grantee. In the event the Grantor's cost to remove and dispose of said Hazardous Materials, contaminated soil and/or water is proposed to exceed two thousand ($2,000.00) dollars, Grantor shall inform Grantee in writing prior to Grantor expending funds related to said removal and disposal. Grantee or its designee shall then have the right to remove and dispose of said Hazardous Materials, contaminated soil and/or water at Grantee's cost and expense, however, the Grantee is entitled to be reimbursed by Grantor of a maximum amount of two thousand ($2,000.00) dollars within sixty (60) days after being invoiced by Grantee.

(g) Grantor has and shall have paid before Close of Escrow any and all past due taxes, assessments, penalties and interest levied and assessed against the Property. If not paid prior to Close of Escrow, Grantor hereby authorizes Escrow Holder to disburse to the taxing authority from funds otherwise due to Grantors an amount sufficient to discharge said taxes, assessments, penalties and interest. Unless the Parcel is assessed separately, Grantor also covenants and agrees to keep current, year-by-year, all taxes, assessments, penalties and interest levied and assessed against the Parcel and the larger Property of which it is a part.

For the purpose of this Section, Hazardous Materials shall include, without limitation, substances defined as "hazardous substances," "hazardous materials," "toxic substances," "hazardous wastes," "extremely hazardous wastes," or "restricted hazardous wastes," or stated to be known to cause cancer or reproductive toxicity, under the Comprehensive Environmental Response, Compensation and Liability Act of 1980, as amended, 42 U.S.C. sections 9601, et seq; the Hazardous Materials Transportation Act, 49 U.S.C. sections 1801, et seq; the Resource Conservation and Recovery Act, 42 U.S.C. sections 6901, et seq; the Federal Water Pollution Control Act, 33 U.S.C. sections 1317, et seq; sections 25115, 25117, 25122.7, 25140, 25249.5, 25249.8, 25281, 25316 or 25501 of the California Health & Safety Code; or any substances so defined or stated in any of the regulations adopted and publications promulgated pursuant to said laws as they may be amended from time to time.

Each of the representations and warranties of Grantor in this Section 4 shall survive for a period of twelve (12) months after the Close of Escrow. Any claim which Grantee may have against Grantor for a breach of any such representation or warranty, whether such breach is known or

unknown, which is not specifically asserted by written notice to Grantor within such twelve (12) month period shall not be valid or effective, and Grantor shall have no liability with respect thereto.

5. REPRESENTATIONS AND WARRANTIES OF GRANTEE.

A. Grantee shall repair and restore any improvements or land (other than the Parcel and any improvements located thereon) belonging to Grantor that may be damaged by Grantee or Grantee's contractor during construction of the works of improvement for which the Parcel is conveyed, or, at Grantee's option, pay to Grantor the market value of such improvements, provided that this Section shall not be construed to require Grantee to pay for the use for which the Parcel is intended. Prior to entering the land to repair and/or restore any damage caused by Grantee or its designee during construction of the works of improvement Grantee shall provide Grantor of written notice, not less than forty-eight (48) hours before commencing such restoration or repair work. Grantee covenants that all restoration and repair work will be performed in a good workmanlike manner and performed in a manner that reasonably minimizes any interference with Grantor's operation of Property and operations of the Grantor's tenants, including without limitation, the reasonable minimization of dust and dirt affecting the Grantor's Property.

B. Grantee shall save harmless and indemnify Grantor against any and all claims, demands, suits, judgments, liens (including any mechanic's liens filed against the Property), damages, losses, expenses and costs relating to injury to, or death of, persons, or loss of, or damage to, the Property or the property of others, arising out of, incurred during or proximately caused by (i) any entry on the Property by Grantee, its agents, employees or contractors in the course of performing the inspections, testings or inquiries provided for in this Agreement, including, without limitation, any release of Hazardous Materials or any damage to the Property; provided that Grantee shall not be liable to Grantor solely as a result of the discovery by Grantee of a pre-existing condition on the Property to the extent the activities of Grantee, its agents, representatives, employees, contractors or consultants do not exacerbate the condition, and/or the (ii) acts or omissions of Grantee or Grantee's contractor in the performance of any work by Grantee or Grantee's contractor to construct the works of improvement for which the Parcel is conveyed. Notwithstanding anything to the contrary contained in this Agreement, the foregoing indemnity and other obligations in this Section 5 shall survive beyond the Close of Escrow, or, if the sale is not consummated, beyond the termination of this Agreement.

6. ACKNOWLEDGMENT OF FULL BENEFITS AND RELEASE.

A. By execution of this Agreement, Grantor, on behalf of itself and its heirs, executors, administrators, successors and assigns, hereby acknowledges that this Agreement provides full payment for the acquisition of the Parcel by Grantee, and Grantor hereby expressly and unconditionally waives any and all claims for damages, relocation assistance benefits, severance damages, interest, loss of goodwill, claims for inverse condemnation or unreasonable pre-condemnation conduct, or any other compensation or benefits, other than as already expressly provided for in this Agreement, it being understood that this is a complete and full settlement of all acquisition claims, liabilities, or benefits of any type or nature whatsoever relating to or in connection with Grantee's acquisition of the Parcel.

B. This Agreement arose out of Grantee's efforts to acquire the Parcel through its municipal authority. The Parties agree that this Agreement is a settlement of claims in order to avoid litigation and shall not in any manner be construed as an admission of the fair market value of the Parcel or of the Property or of liability by any Party to this Agreement. Grantor, on behalf of itself and its heirs, executors, administrators, successors and assigns, hereby fully release Grantee, its successors, agents, representatives, and assigns, and all other persons and associations, known or unknown, from all claims and causes of action by reason of any damage which has been sustained, or

may be sustained, as a result of Grantee's efforts to acquire the Parcel or to construct works of improvement thereon, or any preliminary steps thereto, except as set forth in Section 5 above. Grantor further releases and agrees to hold Grantee harmless from any and all claims brought by any tenant of Grantor relating to any purported interest of such tenant in the Parcel. This release shall survive the Close of Escrow.

7. REMEDIES

A. If Grantor defaults under this Agreement, then Grantee may, at Grantee's option, terminate the Escrow or initiate an action for specific performance of this Agreement, or pursue any other rights or remedies that Grantee may have at law or in equity. If Grantee defaults under this Agreement, then Grantor may, at Grantor's option, terminate the Escrow or pursue any rights or remedies that Grantor may have at law or in equity.

B. Grantee shall diligently proceed with its construction of the permanent improvements and in the event Grantee and Grantee's employees, representatives, agents and/or independent contractors, fails to complete its construction of the permanent improvements within seventy-five (75) calendar days of the commencement of work on the affected property, the Grantee shall pay Grantor Two Hundred Fifty Dollars ($250), as liquidated damages, and not as a penalty, for each calendar day that Grantee continues work, unless however, additional time is needed for the removal and disposal of Hazardous Materials, contaminated soil and/or water. Grantee acknowledges and understands that it must complete the removal and disposal of Hazardous Materials, contaminated soil and/or water in a timely manner and on or before a date that is mutually agreed upon by both the Grantor and Grantee. Grantor and Grantee acknowledge, recognize and agree that any sums which would be payable pursuant to this Section 7B are in the nature of liquidated damages, and not a penalty, and are fair and reasonable and such payment represents a reasonable estimate of fair compensation for the losses that may reasonably be anticipated from such failure. Unless Grantor otherwise directs, Grantee shall pay all liquidated damages due and owing to Grantor on the last business day of each week.

8. MISCELLANEOUS.

A. Notice. Any notice to be given or other document or documents to be delivered to either Party by the other hereunder may be delivered in person or may be deposited in the United States Mail in the State of California, duly registered or certified, with postage prepaid, and addressed as follows:

Grantor:	TMT SOUTH BAY BUSINESS PARK, INC 2807 Oregon Court Torrance, California 90503 Attn: Kevin Apel
With a copy to :	RREEF Property Management 1630 South Sunkist Street, Suite A Anaheim, CA 92806 Attn: Russell D. Binggeli Manager of Engineering Operations
Grantee:	CITY OF TORRANCE 3031 Torrance Boulevard Torrance, CA 90503 Attn: City Clerk

Any Party hereto may, from time to time, by written notice to the other Party, designate a different address, which shall be substituted for the one specified above. Any notice or other documents sent by registered or certified mail as aforesaid shall be deemed to have been effectively served or delivered at the expiration of twenty-four (24) hours following the deposit of said notice or other documents in the United States mail.

B. Time of Essence. Time is of the essence with respect to each and every provision hereof.

C. Assignment. Neither this Agreement, nor any interest herein, shall be assignable by any Party without prior written consent of the other Party.

D. Governing Law. All questions with respect to this Agreement, and the rights and liabilities of the Parties hereto, shall be governed by and construed in accordance with the laws of the State of California.

E. Inurement. This Agreement shall inure to the benefit of, and shall be binding upon, the assigns, successors in interest, personal representatives, estates, heirs and legatees of each of the Parties hereto.

F. Attorneys' Fees. If any action, arbitration or other proceeding is brought for the interpretation or enforcement of this Agreement, or because of any alleged dispute, breach, default or misrepresentation in connection with the Agreement, the successful or prevailing Party shall be entitled to recover actual attorneys' fees and other costs it incurs in that action or proceeding, in addition to any other relief to which it may be entitled, including fees for any in-house counsel of the Parties.

G. Entire Agreement. This Agreement contains the entire Agreement of the Parties hereto, and supersedes any prior written or oral agreements between them concerning the subject matter contained herein. There are no representations, agreements, arrangements, or understandings, oral or written, between the Parties hereto, relating to the subject matter contained in this Agreement which are not fully expressed herein.

H. Additional Documents. The Parties hereto agree to execute any and all additional documents and instruments necessary to carry out the terms of this Agreement.

I. No Admissions. This Agreement is a compromise and settlement of outstanding claims between the Parties relating to Grantee's acquisition of the Parcel and shall never be treated as an admission by either Party to the Agreement for any purpose in any judicial, arbitration or administrative proceeding between the Parties. This paragraph shall not apply to any claim that one may have against the other for breach of any provision or covenant of this Agreement.

J. No Merger. All representations, warranties, acknowledgments, releases, covenants and obligations contained in this Agreement shall survive delivery and recordation of the Grant of Utility Easement Deed.

K. Ratification. This Agreement is subject to approval and ratification by the City Council of the City of Torrance.

L. Broker. Grantor and Grantee each represent and warrant to the other that no broker, agent or finder has been engaged by it in connection with the transaction contemplated by this Agreement and that all negotiations relative to these instructions and this transaction have been carried out by such Party directly with the other Party without the intervention of any person in such a

manner as to give rise to any valid claim against either of the Parties for a broker's commission, finder's fee or other like payment. Each of the Parties shall indemnify and defend the other Party and hold it harmless from any and all loss, damage, liability or expense, including costs and reasonable attorneys' fees, which the other Party may incur or sustain by reason of or in connection with any misrepresentation or breach of warranty by the indemnifying Party with respect to the foregoing.

M. Counterparts. This Agreement may be signed in counterpart or duplicate copies, and any signed counterpart or duplicate copy shall be equivalent to a signed original for all purposes.

N. Grantor's Knowledge. For purposes of this Agreement and any document delivered at the Close of Escrow, whenever the phrase "to the best of Grantor's knowledge" or the "knowledge" of Grantor or words of similar import are used, they shall be deemed to mean and are limited to the current actual knowledge only of Kevin Apel, at the times indicated only, and not any implied, imputed or constructive knowledge of such individual(s) or of Grantor, and without any independent investigation or inquiry having been made or any implied duty to investigate or make any inquiries Furthermore, it is understood and agreed that such individual(s) shall have no personal liability in any manner whatsoever hereunder or otherwise related to the transactions contemplated hereby.

[Signature page follows]

EXECUTED on the date or dates set forth below. This Agreement shall be effective as of the date signed by all parties.

CITY OF TORRANCE,
A Municipal Corporation

Frank Scotto, Mayor

ATTEST:

Sue Herbers, City Clerk

DATED: 03-26-2009

APPROVED AS TO FORM:

JOHN L. FELLOWS III
City Attorney

By: _____
(name)
Deputy City Attorney

DATED: 03-26-2009

TMT South Bay Business Park, Inc.,
A Delaware Corporation

By: RREEF Management Company,
A Delaware Corporation

By: _____
Kevin Apel
Vice President, District Manager

DATED: 3/4/09

Exhibit "A"
Temporary Construction Easement

(see attached)

Exhibit "A" - Temporary Construction Easement

LINE TABLE		
LINE	BEARING	LENGTH
L1	S48°00'00"E	20.30'
L2	WEST	42.17'
L3	N59°59'59"W	27.17'
L4	S42°00'00"W	29.80'
L5	N48°00'00"W	62.85'
L6	WEST	34.82'
L7	NORTH	13.67'
L8	WEST	4.00'
L9	NORTH	2.07'
L10	EAST	65.87'
L11	S59°59'59"E	70.00'
L12	N89°59'51"W	60.63'
L13	NORTH	35.00'

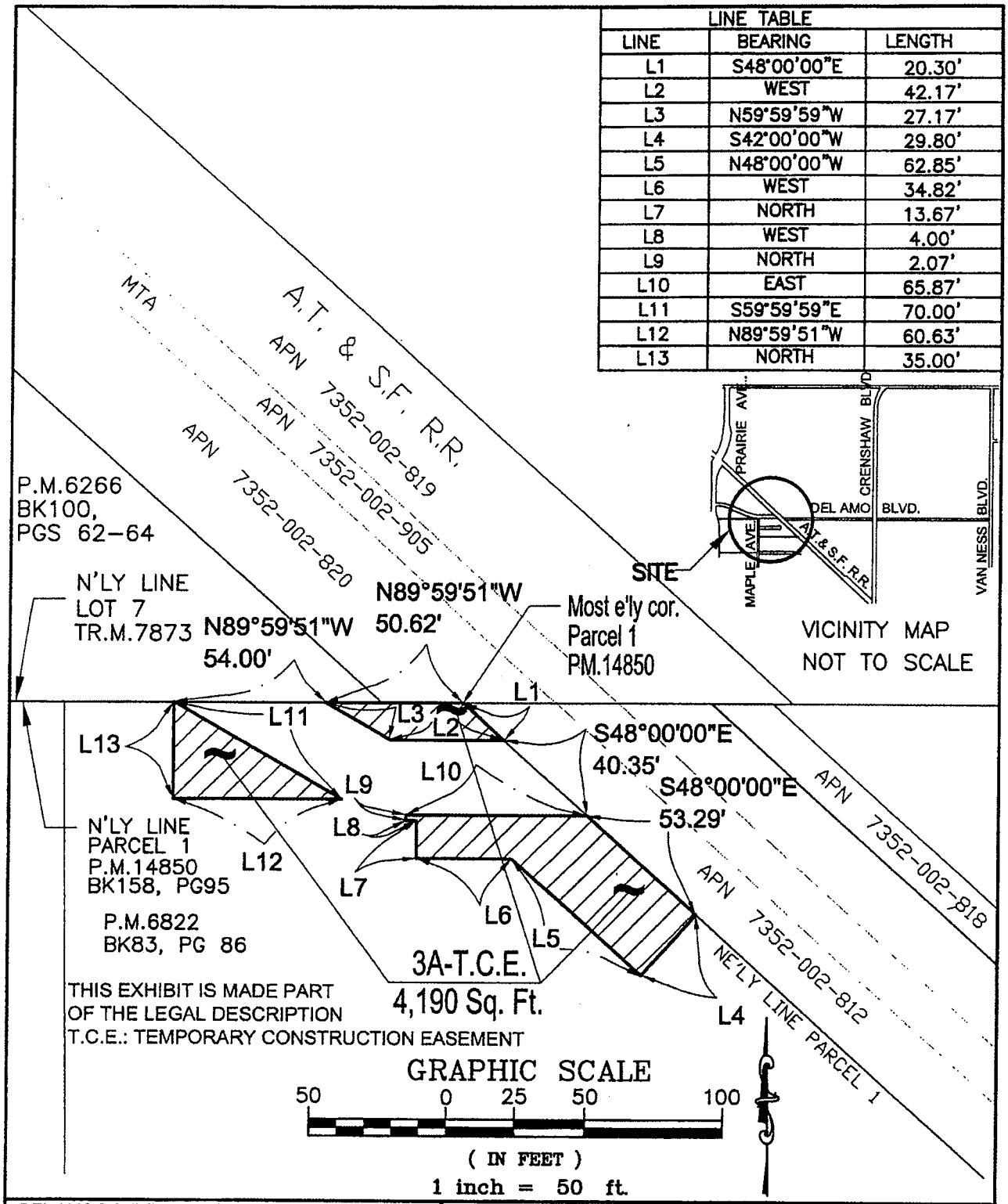

DEL AMO BOULEVARD EXTENSION CITY OF TORRANCE		OWNER NAME : TMT SOUTH BAY BUSINESS PARK APN 7352-009-027	DATE: 03-29-06
Paragon Partners Ltd. 5762 Bolsa Avenue, Ste. 201 Huntington Beach, CA 92649	CHECKED _____ DATE	CITY OF TORRANCE POR. PCL 1, P.M. 14850, BK 158,PG 95 POR. LOT 7,TR. M. 7873, BK 109, PGS 99&100 COUNTY OF LOS ANGELES	SCALE: AS SHOWN DRAWN BY: MAT REV. DATE 6/23/6 REV. No 3

Exhibit "B"
Permanent Utility Easement

(see attached)

EXHIBIT "B"

LINE TABLE		
LINE	BEARING	LENGTH
L1	S48°00'00"E	20.30'
L2	S48°00'00"E	40.35'
L3	WEST	79.39'
L4	N59°59'59"W	81.17'
L5	S89°59'51"E	54.00'
L6	S59°59'59"E	27.17'
L7	EAST	42.17'

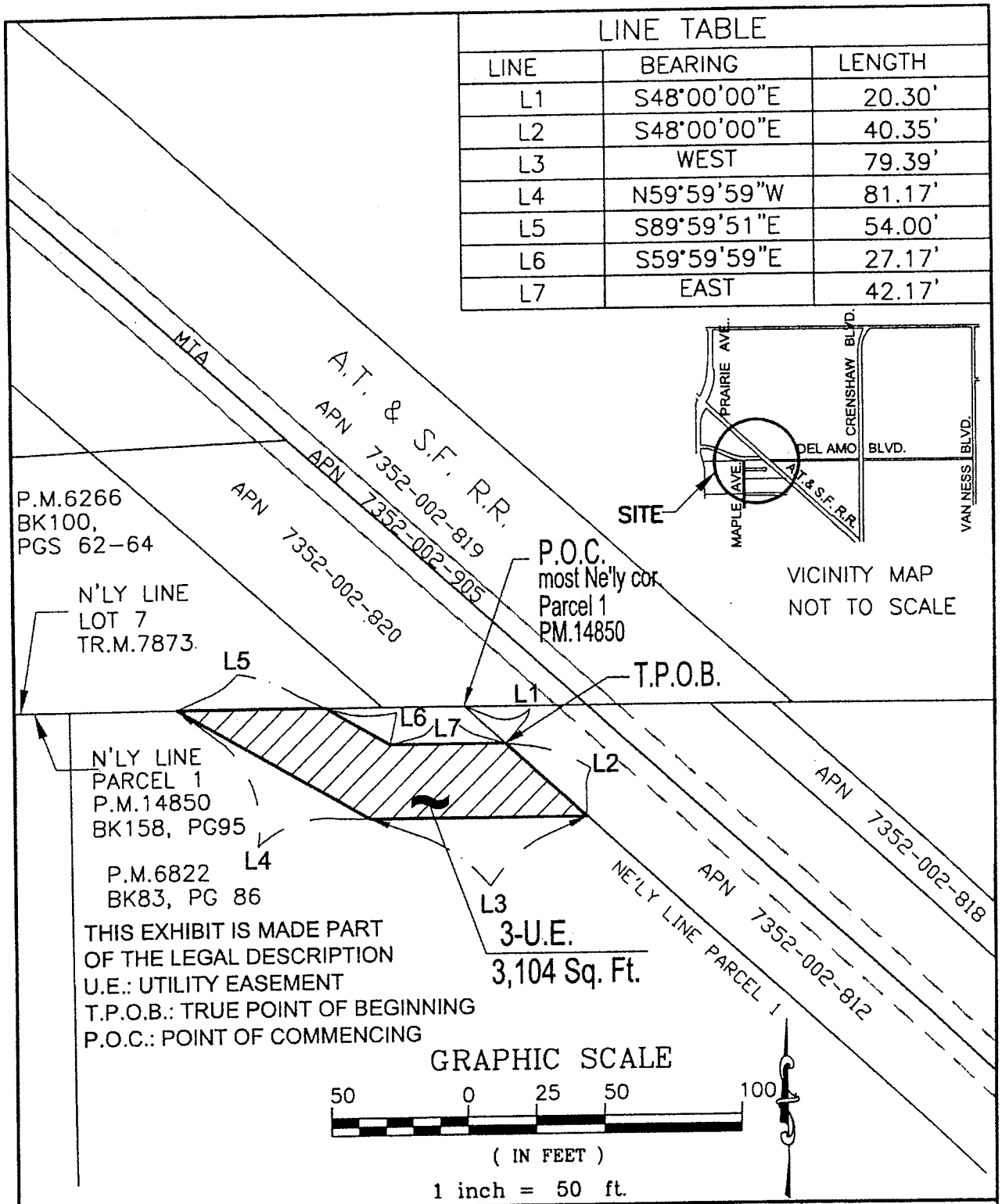

THIS EXHIBIT IS MADE PART OF THE LEGAL DESCRIPTION
U.E.: UTILITY EASEMENT
T.P.O.B.: TRUE POINT OF BEGINNING
P.O.C.: POINT OF COMMENCING

DEL AMO BOULEVARD EXTENSION CITY OF TORRANCE	OWNER NAME : TMT SOUTH BAY BUSINESS PARK APN 7352-009-027	DATE: 03-22-06
Paragon Partners Ltd. 5762 Bolsa Avenue, Ste. 201 Huntington Beach, CA 92649	CITY OF TORRANCE	SCALE: AS SHOWN
	POR. PCL 1, P.M. 14850, BK 158,PG 95	DRAWN BY : MAT
	POR. LOT 7,TR. M. 7873, BK 109, PGS 99&100	REV. DATE 6/3/6 REV. No2
CHECKED _____ DATE	COUNTY OF LOS ANGELES	

Exhibit "C"
Form of Grant of Utility Easement Deed

(see attached)

UTILITY EASEMENT

THAT PORTION OF PARCEL 1 IN THE CITY OF TORRANCE, COUNTY OF LOS ANGELES, STATE OF CALIFORNIA, AS SHOWN ON PARCEL MAP No. 14850 AS FILED IN BOOK 158, PAGES 94 AND 95 OF PARCEL MAPS, IN THE OFFICE OF THE COUNTY RECORDER OF SAID COUNTY, BOUNDED AND DESCRIBED AS FOLLOWS:

COMMENICING AT THE NORTHEASTERLY CORNER OF SAID PARCEL 1; THENCE ALONG THE NORTHEASTERLY LINE OF SAID PARCEL SOUTH 48°00'00" EAST, 20.30 FEET TO THE **TRUE POINT OF BEGINNING**, SAID LAST MENTIONED LINE ALSO BEING THE SOUTHWESTERLY LINE OF THE RIGHT OF WAY, 60 FEET WIDE, OF THE SANTA FE AND LOS ANGELES HARBOR RAILWAY COMPANY AS DESCRIBED IN PARCEL 1 OF DEED DATED JUNE 14, 1922, RECORDED JULY 1, 1922 IN BOOK 1261, PAGE 48, OFFICIAL RECORDS OF SAID COUNTY; THENCE CONTINUING ALONG SAID NORTHEASTERLY LINE SOUTH 48°00'00" EAST, 40.35 FEET; THENCE WEST 79.39 FEET; THENCE NORTH 59°59'59" WEST 81.17 FEET TO THE NORTHERLY LINE OF SAID FIRST MENTIONED PARCEL 1, SAID NORTHERLY LINE ALSO BEING THE NORTHERLY LINE OF LOT 7, AS SHOWN ON TRACT MAP No. 7873, RECORDED IN BOOK 109, PAGES 99 AND 100 OF MAPS IN THE OFFICE OF SAID COUNTY RECORDER ; THENCE ALONG SAID NORTHERLY LINE SOUTH 89°59'51" EAST, 54.00 FEET; THENCE SOUTH 59°59'59" EAST , 27.17 FEET;THENCE EAST TO SAID NORTHEASTERLY LINE OF PARCEL 1, A DISTANCE OF 42.17 FEET TO THE **TRUE POINT OF BEGINNING.**

CONTAINING 3,104 SQUARE FEET OR 0.071 ACRES MORE OR LESS.

A.P. NO. 7352-009-027

RECORDING REQUESTED BY AND
WHEN RECORDED MAIL TO:

_____
_____
_____
_____

(SPACE ABOVE THIS LINE FOR RECORDER'S USE)

GRANT OF UTILITY EASEMENT DEED

FOR VALUABLE CONSIDERATION, the receipt and sufficiency of which is hereby acknowledged, **TMT SOUTH BAY BUSINESS PARK, INC.**, a Delaware corporation ("**Grantor**"), hereby GRANTS to the **CITY OF TORRANCE**, a municipal corporation ("**Grantee**"), a non-exclusive permanent utility easement (the "**Utility Easement**") on and over a portion of that certain real property ("**Property**") located in the City of Torrance, County of Los Angeles, State of California on the terms and conditions contained in this Agreement and that certain Agreement for Conveyance of Property, dated as of February __, 2009, executed by and between Grantor and Grantee (the "**Agreement**"). The location of the Utility Easement is more particularly described and shown as the shaded area in **Exhibit "A"** attached hereto and incorporated herein (the "**Easement Area**").

The Utility Easement shall be used by Grantee for the purposes of establishing, using and maintaining two separate subsurface water pipelines through the Easement Area. Grantor also hereby grants to Grantee (and its successors in title) the non-exclusive right to access the Easement Area for the purpose of use, installation, repair, maintenance and replacement of such pipelines.

By accepting this Utility Easement, Grantee agrees that all construction, repair and restoration work performed by Grantee in the Easement Area will be performed in a good workmanlike manner and performed in a manner that reasonably minimizes any interference with Grantor's operation of the Property and the operations of Grantor's tenants, including, without limitation, the reasonable minimization of dust and dirt affecting the Property.

This Grant of Utility Easement Deed and the Agreement, the terms of which are incorporated by reference herein, are binding upon Grantor's successors and assigns

[*Signature page follows*]

DATED: _____

TMT SOUTH BAY BUSINESS PARK, INC.,
a Delaware corporation

By: RREEF Management Company,
A Delaware corporation

By: _____
Kevin Apel
District Manager

STATE OF CALIFORNIA)
) ss
COUNTY OF _____)

On _____, _____, before me, _____, a Notary Public, personally appeared _____, who proved to me on the basis of satisfactory evidence to be the person(s) whose name(s) is/are subscribed to the within instrument and acknowledged to me that he/she/they executed the same in his/her/their authorized capacity(ies), and that by his/her/their signature(s) on the instrument the person(s), or the entity upon behalf of which the person(s) acted, executed the instrument.

I certify under PENALTY OF PERJURY under the laws of the State of California that the foregoing paragraph is true and correct.

WITNESS my hand and official seal.

_____
Signature of the Notary Public

(Seal)

EXHIBIT A

Legal Description and Map of Utility Easement

(See attached)

CERTIFICATE OF ACCEPTANCE

This is to certify that the interest in real property conveyed by the foregoing Grant of Utility Easement Deed from **TMT SOUTH BAY BUSINESS PARK, INC.**, a Delaware corporation, to the **CITY OF TORRANCE**, a municipal corporation, is hereby accepted by the undersigned on behalf of the **CITY OF TORRANCE** pursuant to authority conferred by a resolution of the **CITY OF TORRANCE,** and the grantee hereby consents to the recordation of this Grant of Utility Easement Deed by its duly authorized officer.

Dated this ____ day of _____, 2009.

By: _____
Name: _____
Title: _____

Exhibit "D"
Form of Temporary Construction Easement

(see attached)

A.P. NO. 7352-009-027

RECORDING REQUESTED BY AND
WHEN RECORDED MAIL TO:

_____
_____
_____
_____

(SPACE ABOVE THIS LINE FOR RECORDER'S USE)

TEMPORARY CONSTRUCTION EASEMENT

FOR VALUABLE CONSIDERATION, the receipt and sufficiency of which is hereby acknowledged, **TMT SOUTH BAY BUSINESS PARK, INC.**, a Delaware corporation ("**Grantor**"), hereby GRANTS to the **CITY OF TORRANCE**, a municipal corporation ("**Grantee**"), a non-exclusive temporary construction easement (the "**Construction Easement**") on and over a portion of that certain real property ("**Property**") located in the City of Torrance, County of Los Angeles, State of California. The location of the Construction Easement is more particularly shown as the shaded area in **Exhibit "A"** attached hereto and incorporated herein (the "**Easement Area**").

The Construction Easement shall be for the use of Grantee in connection with the construction and installation of two subsurface water pipelines within the portion of the Property covered by the non-exclusive permanent utility easement concurrently being granted by Grantor to Grantee, including without limitation, storing of materials and equipment, provided that no equipment shall remain on the Easement Area overnight unless it is contained within a protected work area that is equipped with traffic control devices. Grantor also hereby grants to Grantee the right to remove and/or replace pavement and soil within the Easement Area and the right to use the Construction Easement for ingress and egress in connection with such construction and installation.

Grantee shall provide Grantor with not less than thirty (30) days prior notice before initial entry onto the Easement Area (such date of initial entry, the "**Commencement Date**"). The Construction Easement shall commence on the Commencement Date and shall terminate seventy-five (75) days thereafter, unless (i) additional time is needed for the removal and disposal of Hazardous Materials (as defined in the Agreement), contaminated soil and/or water in accordance with the provisions in this Temporary Construction Easement and/or (ii) extended by mutual agreement of Grantor and Grantee.

By accepting this Construction Easement, Grantee agrees that all construction, repair and restoration work performed by Grantee in the Easement Area will be performed in a good workmanlike manner and performed in a manner that reasonably minimizes any interference

with Grantor's operation of the Property and the operations of Grantor's tenants, including, without limitation, the reasonable minimization of dust and dirt affecting the Property.

This Temporary Construction Easement and all of the provisions the Agreement, the terms of which are incorporated by reference herein, are binding upon Grantor's successors and assigns.

[*Signature page follows*]

DATED: _____

TMT SOUTH BAY BUSINESS PARK, INC.,
a Delaware corporation

By: RREEF Management Company,
A Delaware corporation

By: _____
Kevin Apel
District Manager

STATE OF CALIFORNIA)
) ss
COUNTY OF _____)

On _____, _____, before me, _____, a Notary Public, personally appeared _____, who proved to me on the basis of satisfactory evidence to be the person(s) whose name(s) is/are subscribed to the within instrument and acknowledged to me that he/she/they executed the same in his/her/their authorized capacity(ies), and that by his/her/their signature(s) on the instrument the person(s), or the entity upon behalf of which the person(s) acted, executed the instrument.

I certify under PENALTY OF PERJURY under the laws of the State of California that the foregoing paragraph is true and correct.

WITNESS my hand and official seal.

_____
Signature of the Notary Public

(Seal)

APPENDIX XX

CALIFORNIA DIVISION OF OCCUPATIONAL SAFETY AND HEALTH
MINING AND TUNNELING UNIT

UNDERGROUND CLASSIFICATION

APPENDIX XXI

SOIL MANAGEMENT PLAN

SOIL MANAGEMENT PLAN FOR DEL AMO BOULEVARD EXTENSION BETWEEN CRENSHAW BOULEVARD AND PRAIRIE AVENUE TORRANCE, CALIFORNIA 90503

Prepared for:

Moffat & Nichol Engineers
c/o Ms. Elizabeth Greer, Project Engineer
3780 Kilroy Airport Way
Suite 600
Long Beach, CA 90806

Prepared by:

AMEC Earth & Environmental, Inc.
1290 North Hancock Avenue
Suite 102
Anaheim, California 92807

January 28, 2009

Job No. 5-212-100600

AMEC Earth & Environmental, Inc.
1290 North Hancock Street, Suite 102
Anaheim, California
USA 92807-1924
Tel (714) 779-2591
Fax (714) 779-8377

www.amec.com

January 28, 2009
Job No. 5-212-100600

Moffat & Nichol Engineers
250 West Wardlow Road
Long Beach, California 90807

Attention: Ms. Elizabeth Greer, Project Engineer

Re: Soil Management Plan For
Del Amo Boulevard Extension
Between Crenshaw Boulevard And Prairie Avenue
Torrance, California 90503

In accordance with our proposal dated November 22, 2004, AMEC Earth & Environmental, Inc. (AMEC) has prepared this Soil Management Plan for implementation during construction activities associated with the above-referenced site.

We appreciate the opportunity to be of service to Moffat & Nichol Engineers on this project. If you have any questions regarding this document, please contact the undersigned.

Respectfully submitted,

Susan E. Booth, P.G. 7614
Senior Geologist
SEB/dc

REGISTERED GEOLOGIST
SUSAN E. BOOTH
Exp. 5/09
NO. 7614
STATE OF CALIFORNIA

c: Ms. Elizabeth Greer, Addressee (6)

AMEC Earth & Environmental, Inc.
1290 North Hancock Street, Suite 102
Anaheim, California
USA 92807-1924
Tel (714) 779-2591
Fax (714) 779-8377

TABLE OF CONTENTS

Page

1 INTRODUCTION 1

2 PREVIOUS ENVIRONMENTAL SITE ASSESSMENT ACTIVITIES 3

3 CONSTITUENTS OF POTENTIAL CONCERN 8

4 EXCAVATED SOIL MANAGEMENT 9
- 4.1 DEFINITIONS 11
- 4.2 ANTICIPATED EXTENT OF SOIL EXCAVATION 11
- 4.3 SOIL SAMPLING PROCEDURES 11
- 4.4 EXCAVATION 12
- 4.5 AIR MONITORING DURING EXCAVATION 12
- 4.6 DUST CONTROL 13
- 4.7 SOIL STOCKPILING 13
- 4.8 POLLUTION CONTROL 13
- 4.9 SURFACE WATER, EROSION AND SEDIMENT CONTROL 14
- 4.10 WELL HEAD PROTECTION 14

5 ANALYTICAL TESTING PROGRAM 14
- 5.1 ANALYTICAL TESTING REQUIREMENTS 14
- 5.2 QUALITY CONTROL SAMPLES 16

6 SOIL CHARACTERIZATION 16

7 DISPOSAL OF IMPACTED SOIL 16

8 HEALTH AND SAFETY PLAN REQUIREMENTS 16
- 8.1 HEALTH AND SAFETY TRAINING REQUIREMENTS 17
- 8.2 HEALTH AND SAFETY MEETINGS 18
- 8.3 MONITORING 18
- 8.4 COMMUNITY HEALTH AND SAFETY PLAN 19

9 PROJECT CLOSEOUT 19

REFERENCES 20

FIGURES

FIGURE 1 – Site Location
FIGURE 2 – Site Plan
FIGURE 3 – Summary of TPH, VOC, and SVOC Analytical Results in Shallow Soil (<5 feet bgs)
FIGURE 4 – Potential Areas of Shallow Impacted Soil

TABLE OF CONTENTS

Page

TABLES

TABLE 1 – Detected Total Petroleum Hydrocarbon within shallow soil (<5 feet bgs)
TABLE 2 – Detected BTEX within shallow soil (<5 feet bgs)
TABLE 3 – Detected Volatile Organic Compounds within shallow soil (<5 feet bgs)
TABLE 4 – Detected Semi-Volatile Organic Compounds within shallow soil (<5 feet bgs)
TABLE 5 – Analytical Testing Program for Soil Planned for Reuse

APPENDICES

APPENDIX A – Soil Sample Analytical Results

1 INTRODUCTION

The purpose of this Soil Management Plan (plan) is to provide environmental data, protocols, and guidance for soil excavation, reuse, and disposal associated with the construction of a new four-lane roadway extension of Del Amo Boulevard between Crenshaw Boulevard and Prairie Avenue in the City of Torrance, California (Site; Figure 1).

This plan is specifically based on the findings of a Phase II Soil Investigation Report prepared by EDAW, Inc. (EDAW, 2001) for City of Torrance and the limited, additional soil sampling performed by AMEC during a geotechnical study (Severn Trent Laboratories, Inc., Unpublished Analytical Reports, 2005a and b). The maximum proposed excavation depth for this project is approximately 5 feet below ground surface (bgs). Based on previous environmental soil sampling analytical results, several constituents of potential concern (COPCs) were identified in shallow soil within the proposed alignment. As such, soils excavated during construction activities at the site may require special handling considerations. This soil management plan only addresses potentially-impacted soil to a depth of 5 feet bgs.

This plan is intended to provide guidance to the construction contractors (Contractor(s)) for handling potentially hazardous soil. Excavation and soil handling work should comply with applicable local, state, and federal regulations, and health and safety requirements, and in accordance with specific requirements of the Regional Water Quality Control Board (RWQCB), the California Integrated Waste Management Board (CIWMB), and local agencies, as discussed in this plan. This soil management plan does not address risk to worker health and safety or to future occupants of the site from environmental impacts. However, it does provide guidelines for the preparation of a site-specific Health and Safety Plan (HASP) and Community Health and Safety Plan, which does address risk and methods to reduce exposure (a component of risk). Specifically, this plan provides:

- maps showing previous sampling locations and analytical test results;
- excavated soil management protocol;
- soil sampling objectives;
- soil sampling protocol;
- soil characterization methodology;
- excavated soil classification methodology;
- site-specific Health and Safety Plan general guidelines; and
- Community Health and Safety Plan general guidelines.

Site Location
Del Amo Boulevard Extension Project
City of Torrance, California

FIGURE
1

2 PREVIOUS ENVIRONMENTAL SITE ASSESSMENT ACTIVITIES

The Site consists of the proposed Del Amo Boulevard Extension located in the City of Torrance. The Site is a rectangular-shaped right-of-way, approximately 0.75-miles in length, located between Prairie Avenue/Madrona Avenue to the west and Crenshaw Boulevard to the east (Figure 1). The proposed alignment for the Del Amo Boulevard Extension crosses over the Burlington Northern Santa Fe (BNSF) railroad tracks, whose right-of-way is owned by the Southern California Regional Rail Authority (SCRRA). The Site is located between the Mobil Oil (Exxon-Mobil) Torrance Refinery complex to the north and the Dow Chemical Manufacturing Plant to the south. The proposed alignment encompasses portions of both of the above-referenced properties and traverses the SCRRA right-of-way (Figure 2). The extension and widening of Del Amo Boulevard will include the following components:

- construction of a new four-lane roadway;
- construction of a new bridge over the BNSF railroad tracks;
- realignment of a portion of a railroad spur along the southern boundary of the Exxon-Mobil property;
- construction of mechanically stabilized embankment (MSE) retaining walls;
- drainage improvements;
- relocation of affected utilities;
- relocation/reconstruction of affected off-site facilities;
- modification of the traffic signal at the intersections of Madrona Avenue/Prairie Avenue at Del Amo Boulevard and Crenshaw Boulevard at Del Amo Boulevard;
- installation of a new traffic signal at Maple Avenue; and
- optional bicycle lane and pedestrian facility on the south side of Del Amo Boulevard only.

On behalf of City, EDAW prepared a Phase II Soil Investigation Report in and around the subject area (EDAW, 2001). Two soil samples (at depths of 0.5 feet and 5 feet bgs) were collected at 12 discrete locations (DABSB001 through DABSB012) shown on Figure 3. Locations were numbered from east (Crenshaw Boulevard) to west (Prairie Avenue) on Del Amo Boulevard. The samples were analyzed for total petroleum hydrocarbons (TPH), volatile organic compounds (VOCs), semi-volatile organic compounds (SVOCs), and California Assessment Manual (CAM) metals. Laboratory results indicated contaminants above laboratory method reporting limits in five locations and recommended further characterization at three locations. Specific locations (Figure 3) identified for further characterization were as follow:

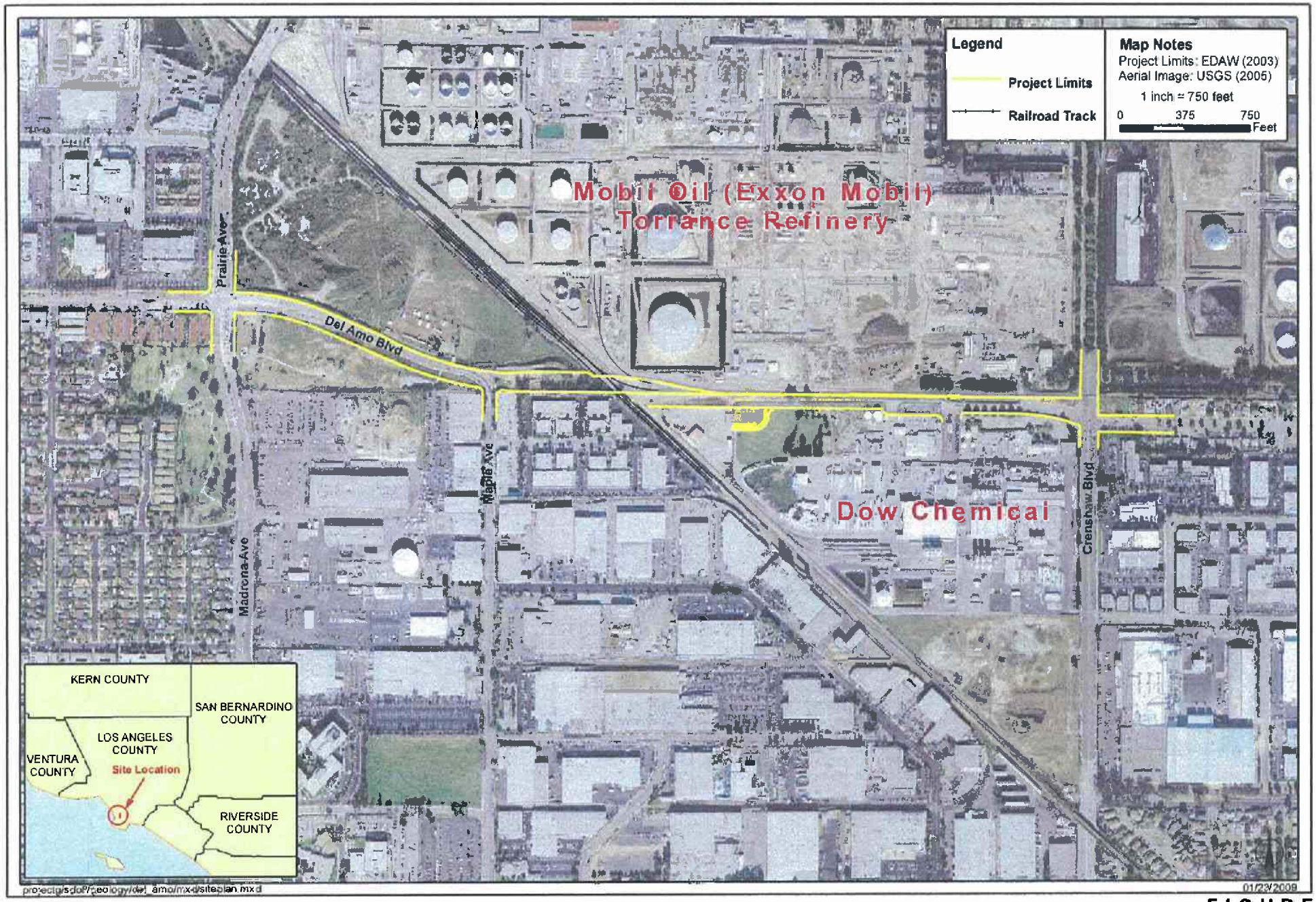

Site Plan
Del Amo Boulevard Extension Project
City of Torrance, California

FIGURE
2

- Location 5 (DABSB005) - adjacent to storm channel;
- Location 8 (DABSB008) - intersection of "C" and 7th Streets inside ExxonMobil Torrance Refinery; and
- Location 9 (DABSB009) - northwest corner of the Former Dowell Schlumberger Facility Parcel.

AMEC collected and analyzed selected soil samples at eight additional locations (B-1 through B-8), shown on Figure 3, during the geotechnical investigation in 2005 (AMEC, 2006). Samples were analyzed for TPH, benzene, toluene, ethylbenzene, and xylenes (collectively BTEX) and methyl tert-butyl ether (MTBE). The laboratory results from these additional samples did not show any concentrations above laboratory reporting limit in the shallow samples (10 feet bgs). The findings of both the EDAW (2001) and AMEC (2006) studies are presented on Figure 3.

Based on these limited assessments, results of soil sample analytical testing at the site indicated the presence of low concentrations of TPH, BTEX, VOCs, SVOCs, and metals. A complete list of analytical results from the EDAW (2001) and AMEC (2006) studies are provided in Appendix A. Various CAM metals were detected above the laboratory reporting limits in all five tested samples (EDAW, 2001). The elevated metal results are all less than the Industrial Preliminary Remediation Goals defined for U.S. EPA Region 9 (U.S. EPA, 2008); and therefore, will not require further consideration or remediation. The detected analytical results for TPH, BTEX, VOCs, and SVOCs within shallow soil (<5 feet bgs) are summarized below on Tables 1 through 4.

TABLE 1
Detected Total Petroleum Hydrocarbons In Shallow Soil (<5 feet bgs)

Boring and Depth (bgs)	Analytical Result
DABSB 008 at 0.5 feet	3.47 mg/kg
DABSB 008 at 5 feet	1.81 mg/kg
DABSB 008 at 0.5 feet	2.44 mg/kg

Note: mg/kg = milligrams per kilogram

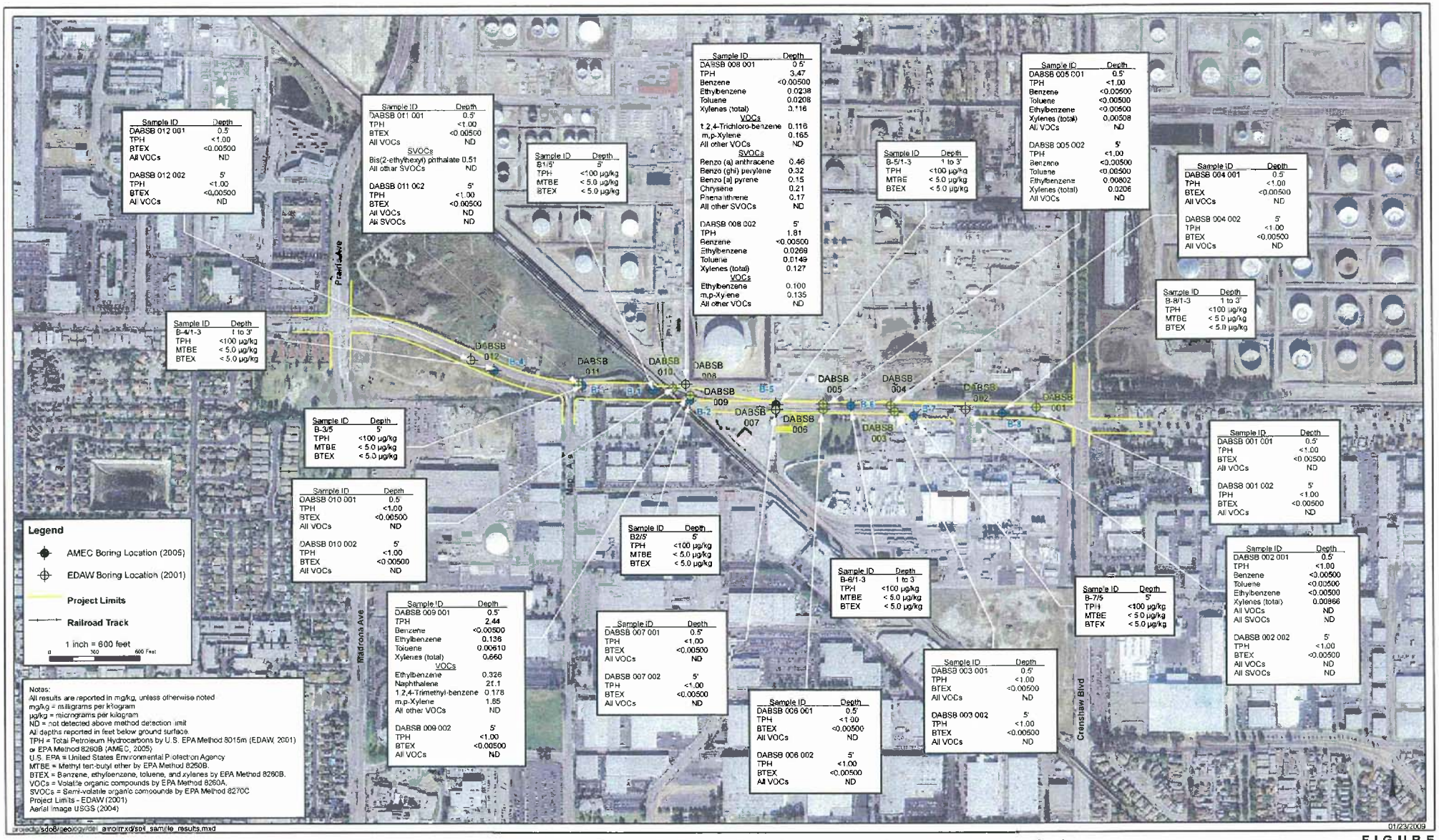

Summary of TPH, VOC, and SVOC Analytical Results in Shallow Soil (<5 feet Below Ground Surface)
Del Amo Boulevard Extension Project
City of Torrance, California

amec

FIGURE
3

TABLE 2
Detected BTEX In Shallow Soil (<5 feet bgs)

Boring and Depth (bgs)	Analytical Result
DABSB 002 at 0.5 feet	Total xylenes - 0.00866 mg/kg
DABSB 005 at 0.5 feet	Total xylenes - 0.00508 mg/kg
DABSB 005 at 5 feet	Toluene - 0.00802 mg/kg Total xylenes - 0.0206 mg/kg
DABSB 008 at 0.5 feet	Toluene - 0.0238 mg/kg Ethylbenzene - 0.0208 mg/kg Total xylenes - 0.116 mg/kg
DABSB 008 at 5 feet	Toluene - 0.0269 mg/kg Ethylbenzene - 0.0149 mg/kg Total xylenes - 0.127 mg/kg
DABSB 009 at 0.5 feet	Toluene - 0.136 mg/kg Ethylbenzene - 0.00610 mg/kg Total xylenes - 0.660 mg/kg

Note: mg/kg = milligrams per kilogram

TABLE 3
Detected Volatile Organic Compounds In Shallow Soil (<5 feet bgs)

Boring and Depth (bgs)	Analytical Result
DABSB 008 at 0.5 feet	1,2,3-Trichloro-benzene - 0.116 mg/kg m,p-Xylene - 0.165 mg/kg
DABSB 008 at 5 feet	Ethylbenzene - 0.100 mg/kg m,p-xylene - 0.165 mg/kg
DABSB 009 at 0.5 feet	Ethylbenzene - 0.326 mg/kg Naphthalene - 21.100 mg/kg 1,2,4-trimethyl-benzene - 0.178 mg/kg m,p-xylene - 1.65 mg/kg

Note: mg/kg = milligrams per kilogram

TABLE 4
Detected Semi-Volatile Organic Compounds In Shallow Soil (<5 feet bgs)

Boring and Depth (bgs)	Analytical Result
DABSB 008 at 0.5 feet	Benzo(a)anthracene - 0.46 mg/kg Benzo(ghi)perylene - 0.32 mg/kg Benzo[a]pyrene - 0.15 mg/kg Chrysene - 0.21 mg/kg Phenanthrene - 0.17 mg/kg
DABSB 011 at 0.5 feet	bis(2-ethylhexyl) phthalate - 0.51 mg/kg

Note: mg/kg = milligrams per kilogram

3 CONSTITUENTS OF POTENTIAL CONCERN

As discussed in Section 2, the project area is located near several industrial facilities, including the adjacent Exxon-Mobil Refinery and Dow Chemical manufacturing plant. The Exxon-Mobil Refinery, located immediately north of the proposed alignment, has a capacity to process approximately 130,000 barrels of gasoline per day. The 52-acre Dow Chemical site, located to the south, is one of the largest plastics production facilities in the western United States. Impacts to the soil within the project area have resulted from industrial activities at these sites. Limited analytical data from soil sampling indicates the presence of impacts associated with refined petroleum, including TPH, VOCs (such as toluene, ethylbenzene, and xylene), SVOCs (such as naphthalene), and heavy metals. Other environmental site conditions that require consideration are the BNSF railroad tracks crossing the site and the planned realignment of the railroad spur along the southern boundary of the Exxon-Mobil refinery. The handling of ballast from the railroad track should be managed separately from excavated soil

Based on the plans provided in the Environmental Impact Report (EIR; EDAW, 2003), construction of the roadway will require approximately 8,800 cubic yards (yd^3) of soil excavation and disposal. As described above, some portion of this soil is known to be impacted with TPH, VOCs, SVOCs, and CAM metals. At a minimum, soil impacts are known to exist within the upper 5 feet of soil at the following locations shown on Figures 3 and 4:

- DABSB 002,
- DABSB 005,
- DABSB 008,
- DABSB 009, and
- DABSB 011.

Soil that contains measurable VOCs, hydrocarbons, or other COPCs above the laboratory reporting limits will be handled, stockpiled, and disposed of according to the criteria defined in the following section. Soil that requires off-site disposal shall be characterized in accordance with the disposal facility analytical testing requirements.

4 EXCAVATED SOIL MANAGEMENT

Excavated soil with visible staining, odor, or measurable COPCs should be disposed of as impacted soil and not used as unrestricted fill. Based on the limited analytical studies (presented in Section 2 above), the lateral extent of impacted soil at the site has not been sufficiently delineated either vertically or laterally. However, know areas of potentially-impacted soil are indicated on Figure 4. It should be noted that railroad ballast may also require excavation and disposal; however, there is no documentation of prior sampling and analysis of this material.

A Sampling and Analysis Plan (SAP) should be developed by the Contractor prior to the start of construction activities at the site. The SAP should detail the procedures to be use to fully characterize the extent of soil impacts on-site. Excavated and in-situ soil will be sampled in accordance with the guidelines defined in the SAP. The SAP should contain detailed procedures for:

- Sample collection,
- Soil screening,
- Decontamination procedures,
- Storage and disposal of impacted materials,
- Sample containers, preservatives, and holding times,
- Field documentation,
- Chain-of-Custody, and
- Sample handling, transport, and storage.

Soil excavation, stockpiling and sample collection should be performed by or under the supervision of a competent person with appropriate training (as defined in Section 4.1). Based on the analytical results, one of the following determinations will be made with respect to the environmental characteristics of the soil:

Soil is hazardous, not suitable for reuse, and should be disposed of as a hazardous waste;
Soil is impacted, not suitable for reuse, and should be disposed of as contaminated waste;
Soil is non-impacted and not suitable for reuse; or
Soil is non-impacted and suitable for reuse.

The suitability of excavated soil for reuse will be based on a geotechnical evaluation. A geotechnical evaluation of excavated soil is beyond the scope of this work plan. In addition, some excavated soil may be in excess of the fill requirements and not needed for reuse.

Some of the soil to be excavated during construction activities is known to be impacted with TPH, VOCs, SVOCs, and CAM metals. Exposure to impacted soils is considered a potentially significant impact to public health and worker safety. The primary pathways for public health and environmental impacts include dust migration, surface erosion, and surface and groundwater contamination. The following sub-sections detail mitigations and precautions that should be implemented to reduce adverse effects.

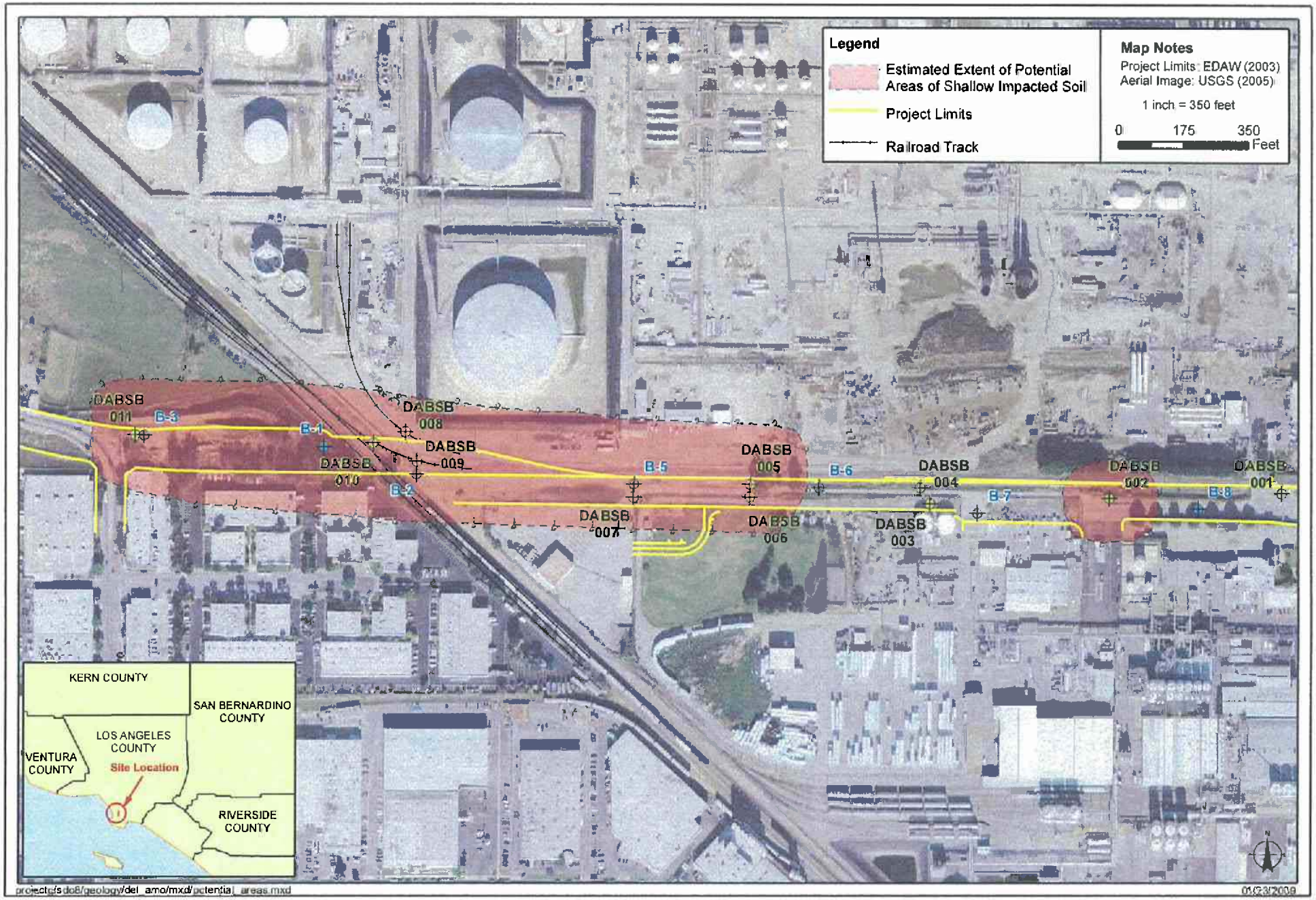

Potential Areas of Shallow Impacted Soil
Del Amo Boulevard Extension Project
City of Torrance, California

FIGURE
4

4.1 DEFINITIONS

A "competent person" is a person trained to make decisions in the field regarding the segregation of excavated soil that is suspected of being hazardous from soil that is suspected of being non-hazardous into separate stockpiles prior to characterization. Such a person shall be trained in the various field methods used to make judgments, including, but not limited to, visual methods (e.g., staining and discoloration), odor, and the operation of organic vapor equipment.

A "hazardous substance" is any substance that is either toxic, corrosive, an irritant, a strong sensitizer, flammable, combustible, radioactive, or that may cause personal injury or illness as a proximate result of any customary or reasonable foreseeable handling or use.

A "contaminated substance" is one that contains a substance, or substances, at concentrations that would: require special training, handling, or the use of personal protective equipment; restrict the end use to protect human health or the environment; be subject to local, state, or federal regulatory requirements; or necessitate an environmentally-related monetary surcharge for handling, transportation, or disposition.

4.2 ANTICIPATED EXTENT OF SOIL EXCAVATION

Based on the plans provided in the EIR (EDAW, 2003), construction of the roadway will require approximately 8,800 $yd^3$of soil excavation and disposal. Soil excavation during construction of the roadway will primarily be associated with preparation of the subsurface to meet paving requirements and the construction of utility trenches. Soil that is excavated during construction activities may be reused provided that it meets the geotechnical requirements of the project and does not contain any measurable amount of COPCs.

The Contractor is responsible for all soil excavation, grading, and stockpiling associated with demolition of existing structures, site preparation, and construction. The Contractor will also be responsible for obtaining underground utility and geophysical clearance prior to in-situ soil sampling or excavation.

4.3 SOIL SAMPLING PROCEDURES

Soil sampling of either in-situ or ex-situ stockpiled soil will be completed in accordance with the latest update of United States Environmental Protection Agency (EPA) SW-846 and the soil sampling protocol presented in the SAP developed by the Contractor. The City will be responsible for selecting a firm or individual to collect the soil samples. By obtaining analytical results prior to excavation, it should be possible to segregate the soil based on its environmental characteristics as it is removed and stockpiled.

The number of samples collected will be determined based on the areal extent of soil to be excavated and the proposed depth of excavation. The following sampling requirements are recommended:

- Stockpiles less than 10 yd^3: a minimum of two samples must be collected, one from each half of the stockpile. Sample points will be selected randomly within each half.

- Stockpiles from 10-20 yd^3: a minimum of three samples must be collected, one from each third of the stockpile. Sample points will be selected randomly within each third.

- Stockpiles from 20-100 yd^3: a minimum of four samples must be collected, one from each quarter of the stockpile. Sample points will be selected randomly within each quarter.

- Stockpiles from 100-500 yd^3: a minimum of one sample for each 25 yd^3or portion must be collected (e.g., a 130 yd^3 stockpile would require 6 samples). Section the stockpile into 25 yd^3 portions and obtain a minimum of one sample from each 25 yd^3 portion. Sample points will be selected randomly within each 25 yd^3 portion of the stockpile.

- Stockpiles over 500 yd^3: a determination based on statistical analysis will be made regarding the number of samples required.

4.4 EXCAVATION

Excavated soil will be considered hazardous unless characterized otherwise in accordance with Section 6, Soil Characterization. The excavation, handling, stockpiling, characterizing, loading, and hauling of soil from the project site, and other activities that have the potential for exposure to the excavated soil, will be performed in accordance with the project HASP and all applicable local, state, and federal statutes, regulations, and guidelines.

Excavation and handling of soils will be done in a manner that does not spread impacted soil and cause contamination to other on-site and off-site areas. Soil will be stockpiled as described in Section 4.7 and considered hazardous until characterized. Following characterization, hazardous soil can segregated from non-hazardous based on the analytical results. Railroad track ballast shall be segregated from other materials, stockpiled separately, and sampled prior to re-use or disposal.

Groundwater is not anticipated to be encountered during excavation activities. However, if encountered, groundwater and water draining from excavated soils will be controlled in a manner consistent with the waste discharge requirements for the Storm Water Pollution Prevention Plan (SWPPP). Excavation will be performed using equipment and methods that do not cause groundwater to splash outside the excavation. Water draining from excavated soils will not be allowed to flow into any existing drainage systems or onto the ground surface unless the surface is protected with a High Density Polyethylene (HDPE) geomembrane. Groundwater removed from the excavations will be contained and collected for disposal. Surface water runoff will be handled according to the site-specific SWPPP, National Pollution Discharge Elimination System (NPDES) requirements, and other pertinent statutes and regulations. The management and protection of groundwater and surface water is the responsibility of the Contractor.

4.5 AIR MONITORING DURING EXCAVATION

Ambient air quality will be monitored during excavation and sampling activities according to the guidelines established in the HASP. The frequency of air monitoring intervals will depend on such factors as type of contaminant(s), weather conditions (e.g., wind direction and velocity), location and proximity of sensitive receptors, and excavating conditions (e.g., excavation within an enclosed structure). An organic vapor analyzer (OVA) equipped with a photoionization detector (PID), flame ionization detector (FID), or equivalent device will be used to monitor

concentrations of total VOCs in the breathing space at worker chest level. Work will stop if VOC concentrations exceed the limit established by the HASP.

4.6 DUST CONTROL

The excavation work will be carried out using methods to minimize air-borne dust from construction operations. Positive means will be provided to prevent air-borne dust from dispersing into atmosphere. At a minimum, a water truck, or other appropriate method will be used to apply water spray. If dust is visible, positive means will be applied immediately to prevent air-borne dust. Care should be used to minimize the amount of water applied to soils that may contain elevated concentrations of contaminants. Surface runoff should be contained as described in Section 4.9.

4.7 SOIL STOCKPILING

The Contractor will be responsible for the soil excavation, transportation of excavated soil to the designated soil staging area, as well as construction and maintenance of the soil staging area. These activities must be performed in accordance with the approved SWPPP. At a minimum, soils must be staged on plastic sheeting (visqueen) or other material of sufficient integrity to prevent contact of the staged soils with the underlying native materials during placement and removal of the staged soils. Secured plastic sheeting/tarps will also be used to cover the stockpiled soil. If necessary, silt fence or hay bales should also be used around the perimeter of the stockpile area to prevent erosion. If the soil has any odor or has an OVA reading greater than 50 parts per million (ppm), the soil should be stockpiled separately in a 55-gallon Department of Transportation (DOT) steel drum or a rolloff bin. Specifically the soil collected in the areas of locations DABSB 002, DABSB 005, DABSB 008, DABSB 009, and DABSB 012 (Figures 3 and 4) should be separated from regular soil pile. Railroad track ballast excavated or removed during construction activities should also be segregated into a pile separate from the soil piles.

Excavated soil will be considered impacted until confirmed as non-impacted by analytical testing. Excavated soil that has not been tested will be stockpiled for characterization at a location established and maintained by the Contractor. Soil that has not been tested should be segregated and stockpiled separately from soil that has been determined to be non-impacted. Track ballast will be segregated from other materials and stored in a separate stockpile area. The Contractor will excavate, load, and transport excavated soil, considered as impacted, to a soil stockpile staging area. The staging area and the stockpiles will be managed by the Contractor in accordance with this plan, the HASP, and the SWPPP. In general, stockpiled soil or other waste will be moistened to minimize dust emissions during stockpiling (however, no runoff will be permitted at any time).

4.8 POLLUTION CONTROL

Methods, means, and facilities will be provided by the Contractor to prevent impacts to soil, water, and atmosphere from discharge of noxious, toxic substances, and pollutants produced by construction operations. The Contractor will comply with federal, state, and local agencies requirements for environmental protection and pollution control.

TABLE 5
Analytical Testing Program for Soil Planned for Reuse

Constituent	Detection Limit	Analytical Test Method
TPH	1.0 mg/kg	EPA test method 8015 modified
CAM–17 Metals by SPLP	various from 0.005 to 0.01 mg/ℓ	EPA test method 6010B/7471A
VOCs[1]	5.0 µg/kg	EPA test method 8260B
SVOCs	5.0 µg/kg	EPA test method 8270C

Notes:
[1]VOCs will be analyzed if OVA screening indicates concentrations greater than 50 ppm above background.
mg/ℓ = milligrams per liter
µg/kg = micrograms per kilogram
mg/kg = milligrams per kilogram

- Soil that meets the geotechnical requirements for reuse shall be tested according to the following criteria:
- Test soil for TPH and CAM–17/Title 22 metals (Sb, As, Ba, Be, Cd, Cr, Co, Cu, Pb, Hg, Mo, Ni, Se, Ag, Tl, V, Zn) by synthetic precipitation leaching procedure (SPLP) (with deionized water).
- Screen each soil sample with an OVA or equivalent field testing equipment. For samples showing readings greater than 50 ppm above background, test for VOCs and SVOCs.

In addition, the following additional analysis may be conducted if required to properly profile the soil for disposal:

- Soluble Threshold Limits Concentrations (STLC) and/or Toxicity Characteristic Leaching Procedure (TCLP) for VOCs and/or SVOCs
- Ignitability
- Reactivity (Cyanide and Sulfide)
- pH
- Toxicity (TOX)
- STLC and/or TCLP Metals (Title 22 and 8 Resource Conservation and Recovery Act [RCRA] metals)

Soil that does not meet the geotechnical requirements for reuse (i.e., requiring off-site disposal), will be tested in accordance with the requirements of the disposal facility. A disposal facility

profile form will be filled out for landfill approval, and manifests will be prepared for transportation requirements.

5.2 QUALITY CONTROL SAMPLES

The main functions of any sampling and analysis program are to obtain accurate, representative environmental samples and to provide defensible analytical data. For the purposes of this project, a duplicate soil sample will be collected at a frequency of one duplicate for every twenty samples and analyzed for the same parameters as the initial sample. Duplicate samples will collected in an identical manner as the initial sample and will be labeled the same as the initial sample with the addition of "dup" following the sample identification number.

6 SOIL CHARACTERIZATION

Excavated soil will be characterized to determine its potential for reuse at the site. If soil meets the criteria for reuse as defined in Section 3, it may be reused at the site.

7 DISPOSAL OF IMPACTED SOIL

Soil that is characterized as an impacted waste will be disposed of off-site. The loading of stockpiled soil into trucks will be performed in accordance with procedures outlined in the HASP and in a manner such that the soil for disposal does not spread outside the stockpile area.

Soil to be loaded into trucks for off-site disposal will be moistened with a water spray or mist for dust control in accordance with Section 4.6 Dust Control. If dust is visible, positive means will be applied immediately to prevent air-borne dust. Care should be used to minimize the amount of water applied to soils that may contain elevated concentrations of contaminants during loading into trucks for off-site disposal.

Loaded truck beds must be covered with a tarp or similar covering device during transportation to the disposal facility. The truck will be decontaminated following completion of soil movement. The contractor shall minimize excess water generated during truck decontamination to the extent possible and will be responsible for the proper disposal of impacted water generated during truck clean out activities.

8 HEALTH AND SAFETY PLAN REQUIREMENTS

Work is subject to a site-specific HASP per the requirements of Occupational Safety & Health Administration (OSHA) Hazardous Waste Operations and Emergency Response Standard (29 CFR 1910.120) and Title 8 California Code of Regulations (CCR) 5192, along with all applicable federal, state, and local regulations and statutes. The intent of the HASP is to reduce, as required in the above regulations and statutes, the exposure of workers and public to chemical and physical hazards that could be encountered during project activities. The Contractor is responsible for the preparation of the HASP and a Community Health and Safety Plan in accordance with all applicable federal, state, and local regulations and statutes. The following outlines the general requirements of the HASP:

APPENDIX A

Soil Sample Analytical Results

Table A-1 - Summary of Soil Sample Analytical Results
(AMEC, 2005)

Sample Location	Sample ID	Sample Depth (ft bgs)	Date Collected	TPH as Gasoline EPA 8260B	MTBE EPA 8260B	Benzene EPA 8260B	Toluene EPA 8260B	Ethylbenzene EPA 8260B	Xylenes (total) EPA 8260B
			Laboratory Reporting Limit (µg/kg)	*100*	*5.0*	*5.0*	*5.0*	*5.0*	*5.0*
			Industrial Soil Screening Level PRG (mg/kg)	*NA*	*190*	*6*	*46,000*	*29*	*2,600*
			Reporting Units	µg/kg	µg/kg	µg/kg	µg/kg	µg/kg	µg/kg
B-1	B1/5'	5	06/21/05	<100	<5.0	<5.0	<5.0	<5.0	<5.0
	B1/10'	10	06/21/05	<100	<5.0	<5.0	<5.0	<5.0	<5.0
	B1/70'	70	06/21/05	<100	<5.0	<5.0	<5.0	<5.0	<5.0
	B1/80'	80	06/21/05	**110**	<5.0	<5.0	<5.0	<5.0	<5.0
	B1/90'	90	06/21/05	<100	<5.0	<5.0	<5.0	<5.0	<5.0
B-2	B2/5'	5	06/20/05	<100	<5.0	<5.0	<5.0	<5.0	<5.0
	B2/10'	10	06/20/05	<100	<5.0	<5.0	<5.0	<5.0	<5.0
B-3	B-3/5	5	06/16/05	<100	<5.0	<5.0	<5.0	<5.0	<5.0
	B-3/25	25	06/16/05	<100	<5.0	<5.0	<5.0	<5.0	<5.0
B-4	B 4/1-3	1 to 3	06/16/05	<100	<5.0	<5.0	<5.0	<5.0	<5.0
B-5	B-5/1-3	1 to 3	06/15/05	<100	<5.0	<5.0	<5.0	<5.0	<5.0
B-6	B-6/1-3	1 to 3	06/15/05	<100	<5.0	<5.0	<5.0	<5.0	<5.0
	B-6/40	40	06/15/05	**220**	<5.0	<5.0	<5.0	<5.0	<5.0
B-7	B-7/5	5	06/15/05	<100	<5.0	<5.0	<5.0	<5.0	<5.0
	B-7/18-20	18 to 20	06/15/05	<100	<5.0	<5.0	<5.0	<5.0	<5.0
B-8	B-8/1-3	1 to 3	06/15/05	<100	<5.0	<5.0	<5.0	<5.0	<5.0

Notes:
µg/kg = micrograms per kilogram
mg/kg = milligrams per kilogram
PRG = U.S. Environmental Protection Agency Region 9 Preliminary Remediation Goals, 2008
ft bgs = feet below ground surface
TPH = total petroleum hydrocarbons
EPA = United States Environmental Protection Agency
MTBE = Methyl tert-butyl ether
NA = Not available
Bold value indicates concentration greater than method detection limit