CITY OF TORRANCE

ZAMPERINI FIELD SECURITY PROJECT, FEAP 616

SHEET INDEX		
SHEET NUMBER	DWG	SHEET TITLE
GENERAL		
1	TS	TITLE SHEET
2	GN–1	LEGEND AND GENERAL NOTES
3	GN–2	FENCING AND GATES OVERALL PLAN
4	GN–3	ACCESS PLAN & PHASING PLAN
FENCING		
5	C–01	GATE A – FAA TOWER
6	C–02	GATE F – HANGAR ACCESS
7	C–03	GATE R – FLITE PARK
8	C–04	GATE O
9	C–05	GATE 23940
10	C–06	GATE P
11	C–07	GATE I
FENCING AND GATES DETAILS		
12	C–D1	CHAIN LINK & ORNAMENTAL FENCE DETAILS
13	C–D2	CANTILEVER SLIDE GATE DETAILS
14	C–D3	V–TRACK ROLL GATE DETAILS
15	S–01	TYPICAL SIGN LAYOUT AT VEHICLE GATES
16	S–02	SIGN DETAILS
ELECTRICAL		
17	E–GN	ELECTRICAL GENERAL NOTES
18	E–OV	ELECTRICAL OVERALL PLAN
19	E–01	ELECTRICAL PLAN AT GATE A
20	E–02	ELECTRICAL PLAN AT GATE F (OVERALL)
21	E–02A	ELECTRICAL PLAN AT GATE F
22	E–03	ELECTRICAL PLAN AT GATE R
23	E–04	ELECTRICAL PLAN FOR GATES O AND 23940
24	E–05	ELECTRICAL PLAN FOR GATE P
25	E–06	ELECTRICAL PLAN ALONG MADISON 1 OF 2
26	E–07	ELECTRICAL PLAN ALONG MADISON 2 OF 2
27	E–GAC	ELECTRICAL PLAN FOR GAC
28	LT–1	EAST T–HANGAR OVERALL
29	LT–2	EAST T–HANGAR LIGHTING PLAN (1 OF 4)
30	LT–3	EAST T–HANGAR LIGHTING PLAN (2 OF 4)
31	LT–4	EAST T–HANGAR LIGHTING PLAN (3 OF 4)
32	LT–5	EAST T–HANGAR LIGHTING PLAN (4 OF 4)
33	LT–6	EAST T–HANGAR PHOTOMETRIC PLAN
ELECTRICAL DETAILS		
34	E–D1	TYPICAL ELECTRICAL DETAILS
35	E–D2	ELECTRICAL EQUIPMENT DETAILS
36	E–D3	ELECTRCIAL PULLBOX DETAILS
37	E–D4	HANGAR POWER DETAILS
38	E–D5	HANGAR LIGHTING DETAILS
39	E–D6	POLE LIGHTING DETAILS
40	E–P1	PANEL SCHEDULES
SECURITY DETAILS		
41	SE–01	SYSTEM BLOCK DIAGRAMS
42	SE–02	SECURITY INSTALLATION DETAILS

STANDARD DRAWINGS/ STANDARD SPECIFICATIONS

THESE PLANS SHALL BE USED IN CONJUNCTION WITH THE LATEST EDITION OF:

1. CITY OF TORRANCE STANDARD DRAWINGS, DEPARTMENT OF BUILDING AND SAFETY.
2. STANDARD SPECIFICATIONS FOR PUBLIC WORKS CONSTRUCTION (GREENBOOK), DATED 2006 REGIONAL SUPPLEMENTS.
3. STATE OF CALIFORNIA DEPARTMENT OF TRANSPORTATION (CALTRANS) STANDARD SPECIFICATIONS, DATED 2010.
4. NATIONAL ELECTRICAL CODE (NEC 2011)
5. CALIFORNIA ELECTRICAL CODE (CEC 2013)
6. CITY OF TORRANCE MUNICIPAL CODE

PROJECT LOCATION

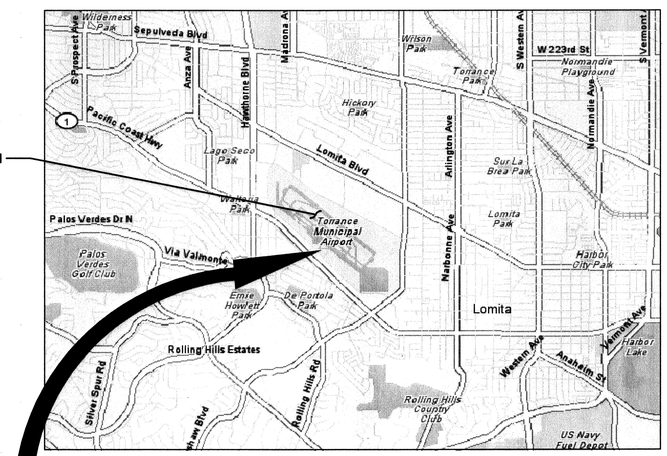

VICINITY MAP

N.T.S.

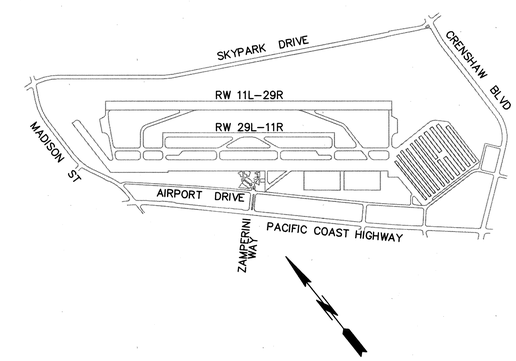

LOCATION MAP

N.T.S.

TORRANCE MUNICIPAL AIRPORT – ZAMPERINI FIELD

3301 AIRPORT DRIVE, TORRANCE CA 90505

Underground Service Alert

Call:TOLL FREE

1–800
227–2600

TWO WORKING DAYS BEFORE YOU DIG

REGISTERED PROFESSIONAL ENGINEER
DUKE S. YOUNG
No. C69209
Exp. 6/30/14
CIVIL
STATE OF CALIFORNIA
10/01/13

PLANS PREPARED BY:

AECOM

999 Town & Country Road
Orange, CA 92868
Phone: 714.567.2501
Fax: 714.567.2441
www.aecom.com

REV	DATE	DESCRIPTION	BY	CHECKED

CITY OF TORRANCE
PUBLIC WORKS DEPARTMENT

ZAMPERINI FIELD SECURITY PROJECT, FEAP 616

TITLE SHEET

DRAWN: AG

DESIGNED: DY

PROJECT ENGINEER: D. YOUNG

APPROVED: 10/10/13

CRAIG S. BILEZERIAN — DATE
CITY ENGINEER
R.C.E. NO. 55339 EXP. 12/31/14

SCALE: NA | SHEET 1 OF 42 | TS

PLAN NO. **AP-177**

10/02/13 16:02 P:\60288818 Zamperini Field\002_CAD\006_Civil\Sheets\TS.DWG

ABBREVIATIONS

ALL ABBREVIATIONS USED IN THE PLANS ARE PER SECTION 1-3 OF THE "GREENBOOK" STANDARD FOR PUBLIC WORKS CONSTRUCTION, 2009 EDITION, EXCEPT FOR:

AFF	ABOVE FINISHED FLOOR
ASIDE	AIRSIDE
(E)	EXISTING
BC	BEGINNING OF CURVE
BLDG	BUILDING
BMP	BEST MANAGEMENT PRACTICES
BVC	BEGINNING OF VERTICAL CURVE
BW	BARBED WIRE
C	CONDUCTOR
CAB	CRUSHED AGGREGATE BASE
CD	CONDUIT
CL	CENTER LINE
CLF	CHAIN LINK FENCE
CLG	CHAIN LINK GATE
CF	CUBIC FEET
CJ	CONSTRUCTION JOINT
CONT	CONTINUOUS
(E)	EXISTING
EC	END OF CURB
EMT	ELECTRICAL METALLIC TUBING
EQ	EQUAL DISTANCE
EQUP	EQUIPMENT
EVC	END OF VERTICAL CURVE
EW	ELECTRIC WELD
EXST	EXISTING
FD	FIRE DEPARTMENT
FL	FLOW LINE
GD	GROUND
HT	HEIGHT OR HIGH
IE	INVERT ELEVATION
LSIDE	LANDSIDE
LT	LEFT
LOG	LIMIT OF GRADING
MUTCD	MANUAL ON UNIFORM TRAFFIC CONTROL DEVICES
NEC	NATIONAL ELECTRIC CODE
(N)	NEW
OM	OBJECT MARKER
OC	ON CENTER
PED	PEDESTRIAN
PCC	PORTLAND CEMENT CONCRETE
PD	POLICE DEPARTMENT
PRC	POINT OF REVERSE CURVATURE
PREP	PREPARATION
PT	POINT
PVI	POINT OF VERTICAL INTERSECTION
PVMT	PAVEMENT
R&R	REMOVAL & REPLACE
RT	RIGHT
SWPPP	STORM WATER POLLUTION PREVENTION PLAN
TB	TERMINAL BLOCK
TL	TAXILANE
TOP	TOP OF PIPE
TOW	TOP OF WALL
T-TAP	TRANSFORMER TAP
UNO	UNLESS NOTED OTHERWISE
TW	TAXIWAY
VEH	VEHICLE
W/	WITH
WIF	WROUGHT IRON FENCE
WIG	WROUGHT IRON GATE
WP	WATER PROOF
2P	TWO POLE
3P	THREE POLE
3W	THREE WIRE

SYMBOLS

∠	ANGLE
Δ	DELTA
ϕ	ELECTRICAL PHASE

CONSTRUCTION NOTES

1. SAWCUT AND REMOVE EXISTING AC PAVEMENT.
2. RESTORE EXISTING PAVEMENT MARKINGS, MATCH IN KIND.
3. CONSTRUCT AC PAVEMENT PER DETAIL 1 ON SHEET E-D1.
4. CONSTRUCT ±6' HIGH, 35' WIDE ORNAMENTAL V-TRACK ROLLING GATE PER SHEET C-D3.
5. CONSTRUCT ±6' HIGH, 16' WIDE ORNAMENTAL CANTILEVER SLIDE GATE PER SHEET C-D2.
6. CONSTRUCT ±6' HIGH ORNAMENTAL FENCE PER DETAIL 2 ON SHEET C-D1.
7. CONSTRUCT 8' HIGH, 44' WIDE DOUBLE LEAF SWING GATE PER DETAIL 2 ON SHEET C-D1.
8. CONSTRUCT 8' HIGH, 50' WIDE CHAINLINK V-TRACK ROLLING GATE PER SHEET C-D3.
9. CONSTRUCT 8' HIGH CHAINLINK FENCE PER DETAIL 1 ON SHEET C-D1.
10. PAINT 4" WHITE STRIPE.
11. PAINT "KEEP CLEAR" WHITE PAVEMENT MARKING, 2' HIGH LETTERING.
12. NOTE NOT USED.
13. CONSTRUCT 8' HIGH, 20' WIDE CHAINLINK CANTILEVER SLIDE GATE PER SHEET C-D2.
14. SALVAGE & REINSTALL EXISTING SIGNAGE.
15. INSTALL BOLLARD PER CITY OF TORRANCE DRAWING T-501.
16. NOTE NOT USED.
17. NOTE NOT USED.
18. INSTALL GATE SIGNAGE PER DETAIL 1 ON SHEET S-01.
19. INSTALL PAVEMENT LOOP DETECTOR.
20. CONSTRUCT CURB & GUTTER, MATCH EXISTING.

DISPOSITION NOTES

- (A) PROTECT IN PLACE.
- (B) ABANDON IN PLACE.
- (C) SALVAGE, CLEAN AND RE-INSTALL.
- (D) DEMOLISH AND REMOVE.
- (E) SEE ELEC. PLAN FOR DISPOSITION.

DEMOLITION NOTES

- (D1) REMOVE EXISTING WIRING AND REPLACE.
- (D2) REMOVE EXISTING CONDUIT AND REPLACE.

LEGEND

- PROPOSED CHAIN LINK FENCE
- PROPOSED ORNAMENTAL FENCE
- EXISTING CHAIN LINK FENCE TO REMAIN
- EXISTING ORNAMENTAL TO REMAIN
- VEHICLE SWING GATE
- VEHICLE SLIDE GATE – ARROW INDICATES SLIDE DIRECTION
- GATE SLIDE TRACK

SECTION AND DETAIL CROSS REFERENCE

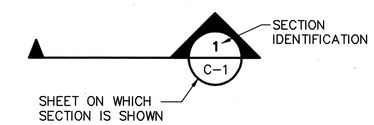

SYMBOL WHERE SECTION IS TAKEN

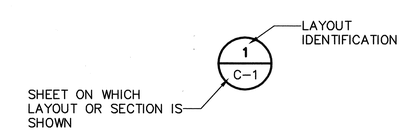

SYMBOL ON PLANS INDICATING LAYOUT VIEW

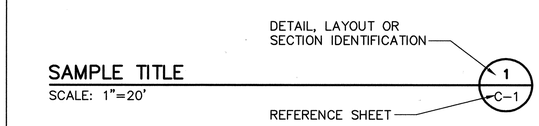

SUBTITLE FOR DETAILED DRAWING

NOTE:
WHERE AN ELEVATION, DETAIL, LAYOUT OR SECTION IS SHOWN ON THE SAME SHEET, SHEET NUMBERS ARE OMITTED AND A DASH IS PLACED IN THE LOWER SEMICIRCLE OF THE SYMBOL.

REGISTERED PROFESSIONAL ENGINEER DUKE S. YOUNG No. C69209 Exp. 6/30/14 STATE OF CALIFORNIA 10/10/13

PLANS PREPARED BY:

AECOM

999 Town & Country Road
Orange, CA 92868
Phone: 714.567.2501
Fax: 714.567.2441
www.aecom.com

REV	DATE	DESCRIPTION	BY	CHECKED

CITY OF TORRANCE
PUBLIC WORKS DEPARTMENT
ZAMPERINI FIELD SECURITY PROJECT, FEAP 616
LEGEND AND GENERAL NOTES

DRAWN: AG	APPROVED: 10/10/13		
DESIGNED: DY	CRAIG S. BILEZERIAN, CITY ENGINEER, R.C.E. NO. 55339	DATE EXP. 12/31/14	
PROJECT ENGINEER: D. YOUNG	SCALE: NA	SHEET 2 OF 42	GN-1
	PLAN NO.	AP-177	

10/02/13 16:02 P:\60289818 Zamperini Field\000_CAD\006_Civil\Sheets\GN-01.dwg

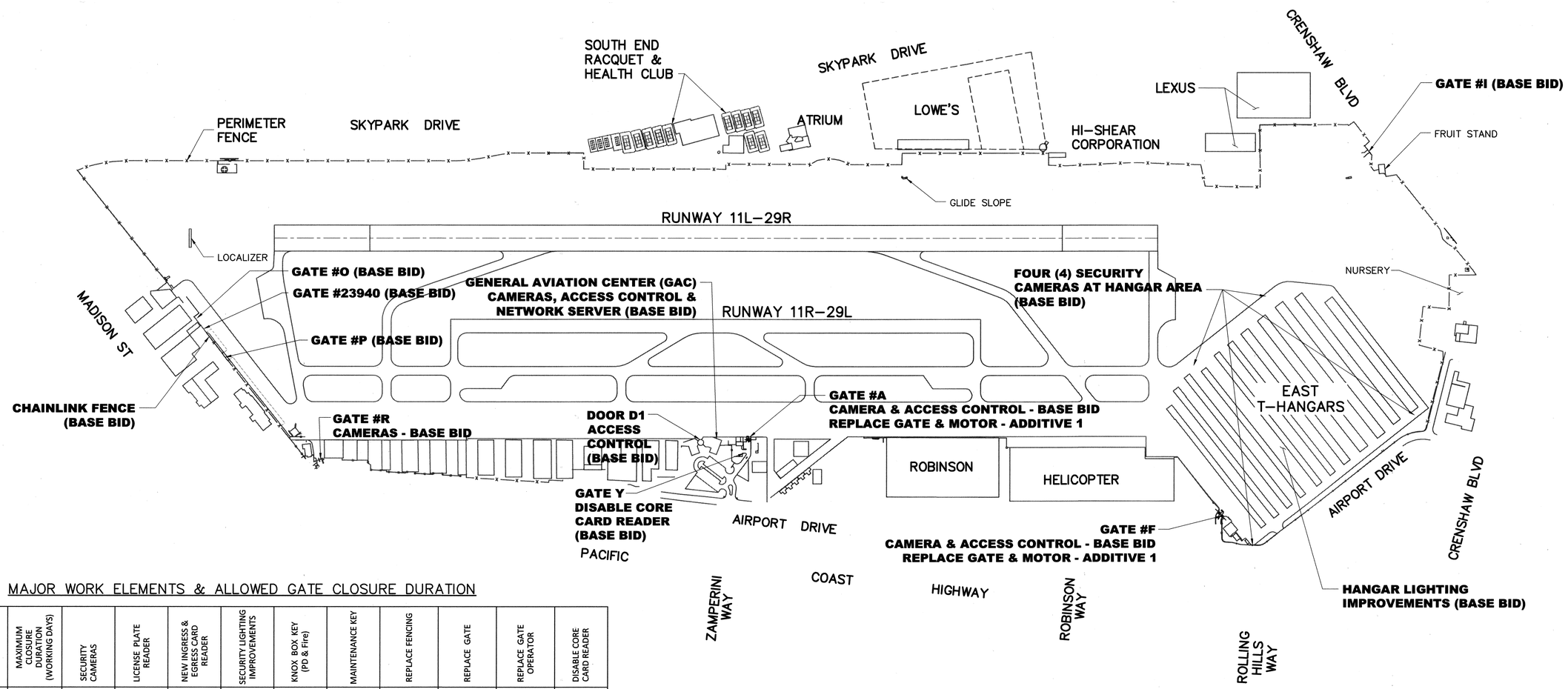

MAJOR WORK ELEMENTS & ALLOWED GATE CLOSURE DURATION

LOCATION	MAXIMUM CLOSURE DURATION (WORKING DAYS)	SECURITY CAMERAS	LICENSE PLATE READER	NEW INGRESS & EGRESS CARD READER	SECURITY LIGHTING IMPROVEMENTS	KNOX BOX KEY (PD & Fire)	MAINTENANCE KEY	REPLACE FENCING	REPLACE GATE	REPLACE GATE OPERATOR	DISABLE CORE CARD READER
GATE A	10 DAYS	BASE BID	BASE BID	BASE BID	BASE BID	BASE BID	BASE BID	-	ADDITIVE (1)	ADDITIVE (1)	-
GATE F	10 DAYS	BASE BID	BASE BID	BASE BID	BASE BID	BASE BID	BASE BID	ADDITIVE (1)	ADDITIVE (1)	ADDITIVE (1)	-
GATE R	NO CLOSURE	BASE BID	BASE BID	-	BASE BID	-	-	-	-	-	-
GATE O	10 DAYS	BASE BID	-	-	BASE BID	-	-	BASE BID	BASE BID		-
GATE 23940	10 DAYS	BASE BID	-	-	BASE BID	-	-	BASE BID	BASE BID		-
GATE P	10 DAYS	BASE BID	-	-	BASE BID	-	-	BASE BID	BASE BID		-
GATE I	-	-	-	-	-	-	-	-	BASE BID	-	-
DOOR D1	NO CLOSURE	BASE BID	-	BASE BID	-	-	-	-	-	-	-
GAC APRON	-	BASE BID	-	-	-	-	-	-	-	-	-
EAST HANGAR	-	BASE BID	-	-	BASE BID	-	-	-	-	-	-
GATE Y	-	-	-	-	-	-	-	-	-	-	BASE BID

WORK TO BE DONE

THIS PROJECT INCLUDES CONSTRUCTION OF NEW GATES, FENCING, SECURITY CAMERAS, LICENSE PLATE READERS & ACCESS CARD READER, CONSTRUCTION OF SECURITY IMPROVEMENTS IN VARIOUS ROOMS IN THE GENERAL AVIATION CENTER (GAC), NEW SECURITY HANGAR LIGHTING SHALL BE INSTALLED AT THE EAST T-HANGARS AND RELATED SITE IMPROVEMENTS.

IF BID ADDITIVE (1) IS AWARDED, NEW VEHICLE GATE WITH OPERATORS SHALL BE INSTALLED AT GATES A & F.

SCALE: 1" = 300'

0 300' 600' 1800'

NOTES:
1. IMPROVEMENTS AT GAC BUILDING NOT SHOWN
2. BASE BID CONTRACT = 90 WORKING DAYS
3. AWARD OF ADDITIVE (1) WILL ADD 15 WORKING DAYS TO CONTRACT DAYS

REGISTERED PROFESSIONAL ENGINEER DUKE S. YOUNG No. C69209 Exp. 6/30/14 STATE OF CALIFORNIA 10/01/13

PLANS PREPARED BY:

AECOM

999 Town & Country Road
Orange, CA 92868
Phone: 714.567.2501
Fax: 714.567.2441
www.aecom.com

REV	DATE	DESCRIPTION	BY	CHECKED

CITY OF TORRANCE
PUBLIC WORKS DEPARTMENT
ZAMPERINI FIELD SECURITY PROJECT, FEAP 616
FENCING AND GATES OVERALL PLAN

DRAWN: AG
DESIGNED: DY
PROJECT ENGINEER: D. YOUNG

APPROVED: 10/10/13
CRAIG S. BILEZERIAN DATE
CITY ENGINEER
R.C.E. NO. 55339 EXP. 12/31/14

SCALE: 1"=300' SHEET 3 OF 42 GN-2
PLAN NO. **AP-177**

10/02/13 16:02 P:\60298818 Zamperini Field\000_CAD\006_Civil\Sheets\GN-02.dwg

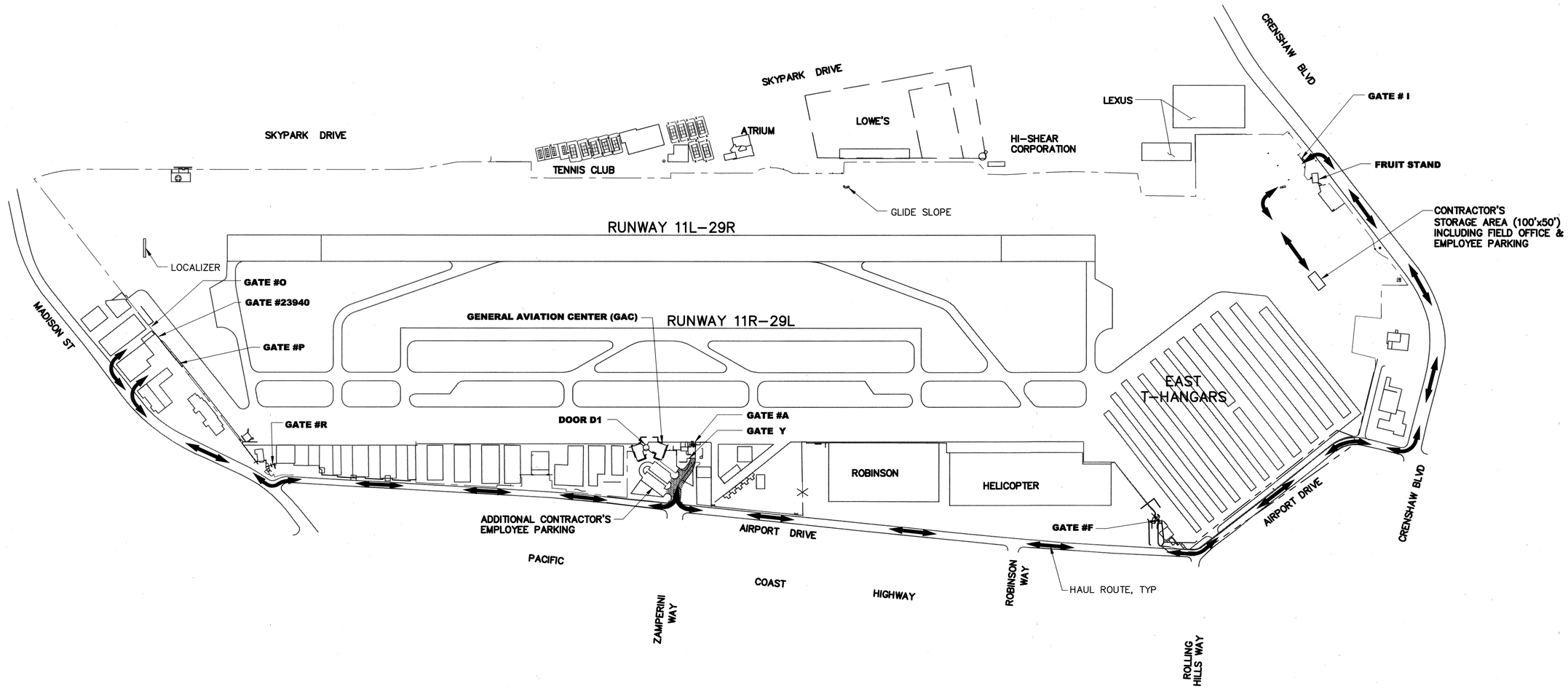

SECURITY & PHASING NOTES:

1. CONTRACTOR SHALL MAINTAIN AIRPORT PERIMETER SECURITY AT ALL TIMES, INCLUDING AFTER WORK HOURS.
2. AT THE END OF EACH WORK DAY, NEW FENCE SHALL BE IN–PLACE TO MAINTAIN AIRPORT PERIMETER SECURITY, OR THE CONTRACTOR SHALL PROVIDE SECURITY GUARD.
3. THE AIRPORT SHALL HAVE THE AUTHORITY TO ADD AND/OR MODIFY SECURITY REQUIREMENTS AT ANY TIME.
4. CONTRACTOR SHALL COORDINATE WITH THE AIRPORT, FIRE DEPARTMENT AND THE POLICE DEPARTMENT TO ENSURE APPROPRIATE ACCESS FOR EMERGENCY EQUIPMENT AND PERSONNEL IS AVAILABLE THROUGHOUT THE DURATION OF THE PROJECT.
5. PHASES CAN BE CONSTRUCTED CONCURRENTLY WITH APPROVAL FROM THE RESIDENT ENGINEER.
6. GATES A & F SHALL NOT BE CLOSED AT THE SAME TIME.
7. GATES SHALL BE CLOSED FOR THE MAXIMUM DURATION SHOWN IN THE TABLE ON SHEET GN–2.
8. GATES UNDER THE CONTROL OF THE CONTRACTOR, THAT ARE OPEN FOR ACCESS, SHALL HAVE PROCEDURES IN PLACE TO PROVIDE ACCESS TO AUTHORIZED PERSONNEL ONLY.
9. CONTRACTOR SHALL PROVIDE ALL NECESSARY TRAFFIC CONTROL FOR GATE CLOSURES.
10. SEE ADDITIONAL REQUIREMENTS PER SPECIFICATION P–110.

SCALE: 1" = 300'

0 300' 600' 900'

REGISTERED PROFESSIONAL ENGINEER DUKE S. YOUNG No. C69209 Exp. 6/30/14 STATE OF CALIFORNIA 10/01/13

PLANS PREPARED BY:

AECOM

999 Town & Country Road
Orange, CA 92868
Phone: 714.567.2501
Fax: 714.567.2441
www.aecom.com

REV	DATE	DESCRIPTION	BY	CHECKED

CITY OF TORRANCE
PUBLIC WORKS DEPARTMENT
ZAMPERINI FIELD SECURITY PROJECT, FEAP 616
ACCESS PLAN & PHASING PLAN

DRAWN: AG
APPROVED: 10/10/13
DESIGNED: DY
CRAIG S. BILEZERIAN DATE
CITY ENGINEER
R.C.E. NO. 55339 EXP. 12/31/14
PROJECT ENGINEER: D. YOUNG
SCALE: 1"=400' SHEET 4 OF 42 GN-3
PLAN NO. **AP-177**

10/02/13 16:03 P:\60298918 Zamperini Field\000_CAD\006_Civil\Sheets\GN-03.dwg

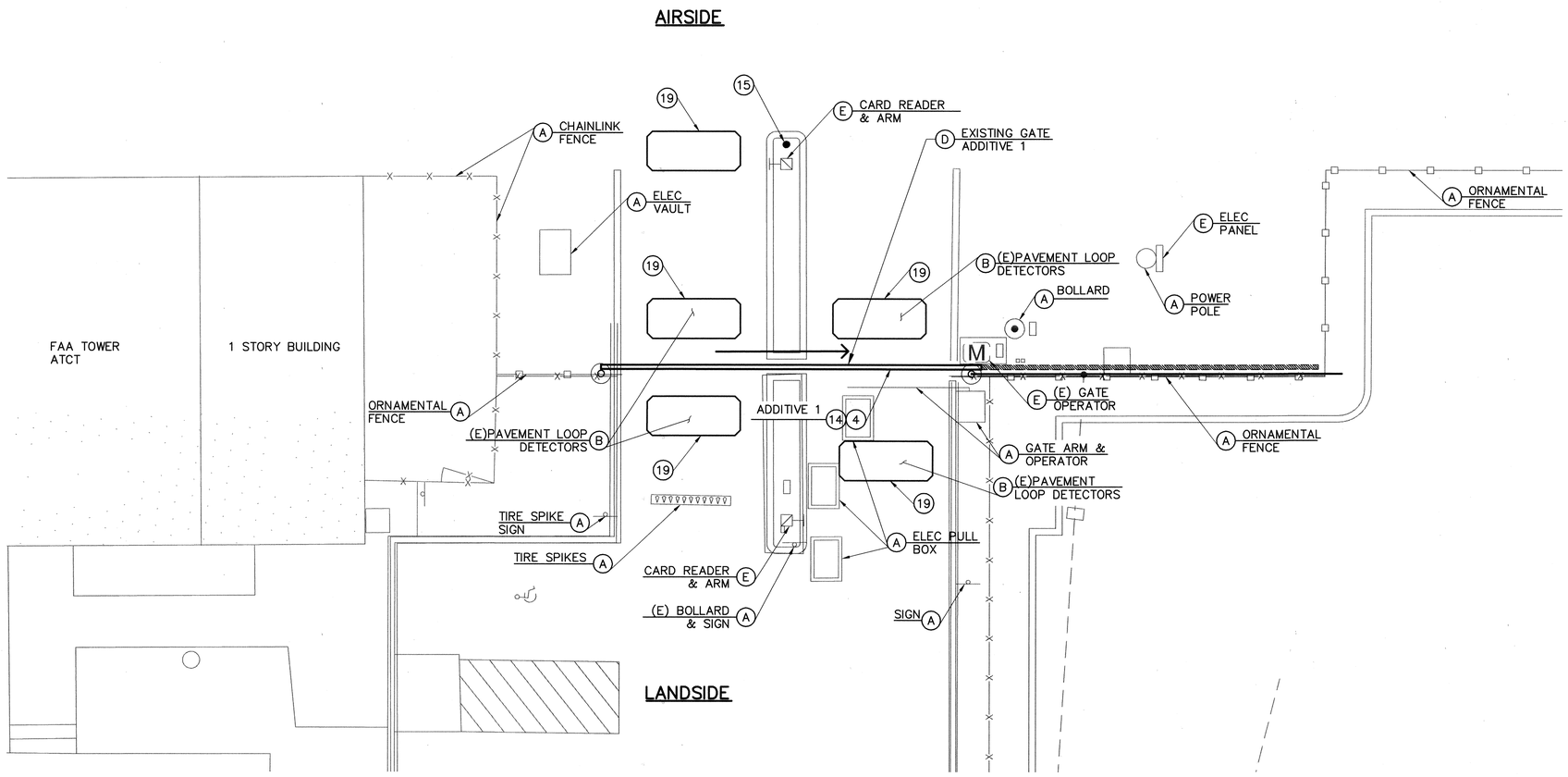

GATE A – MAIN ACCESS (1)

SCALE: 1"=5'

DISPOSITION NOTES

(A) PROTECT IN PLACE.

(B) ABANDON IN PLACE.

(E) SEE ELEC. PLAN FOR DISPOSITION.

CONSTRUCTION NOTES

(15) INSTALL BOLLARD PER CITY OF TORRANCE DRAWING T–501.

(19) INSTALL PAVEMENT LOOP DETECTOR.

LEGEND

—x— EXISTING CHAIN LINK FENCE TO REMAIN

—□— EXISTING ORNAMENTAL TO REMAIN

VEHICLE SLIDE GATE – ARROW INDICATES SLIDE DIRECTION

ADDITIVE (1) NOTES

(D) DEMOLISH AND REMOVE.

(4) CONSTRUCT ±6' HIGH, 35' WIDE ORNAMENTAL V–TRACK ROLLING GATE PER SHEET C–D3.

(14) SALVAGE & REINSTALL EXISTING SIGNAGE.

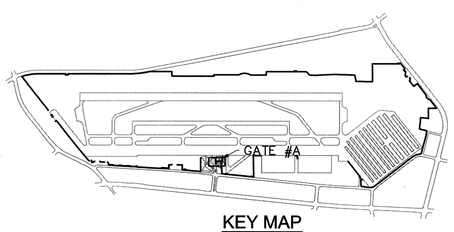

KEY MAP

SCALE: 1" = 5'

0 5' 10' 15'

REGISTERED PROFESSIONAL ENGINEER DUKE S. YOUNG No. C69209 Exp. 6/30/14 CIVIL STATE OF CALIFORNIA 10/10/13

PLANS PREPARED BY:

AECOM

999 Town & Country Road
Orange, CA 92868
Phone: 714.567.2501
Fax: 714.567.2441
www.aecom.com

REV	DATE	DESCRIPTION	BY	CHECKED

CITY OF TORRANCE
PUBLIC WORKS DEPARTMENT

ZAMPERINI FIELD SECURITY PROJECT, FEAP 616

GATE A - FAA TOWER

DRAWN: AG	APPROVED: 10/10/13		
DESIGNED: DY	CRAIG S. BILEZERIAN CITY ENGINEER R.C.E. NO. 55339	DATE EXP. 12/31/14	
PROJECT ENGINEER: D. YOUNG	SCALE: 1"=5'	SHEET 5 OF 42	C-01
	PLAN NO.	AP-177	

10/02/13 16:03 P:\60398416 Zamperini Field\DBL_CAD\DBL_Civil\Sheets\C-01.dwg

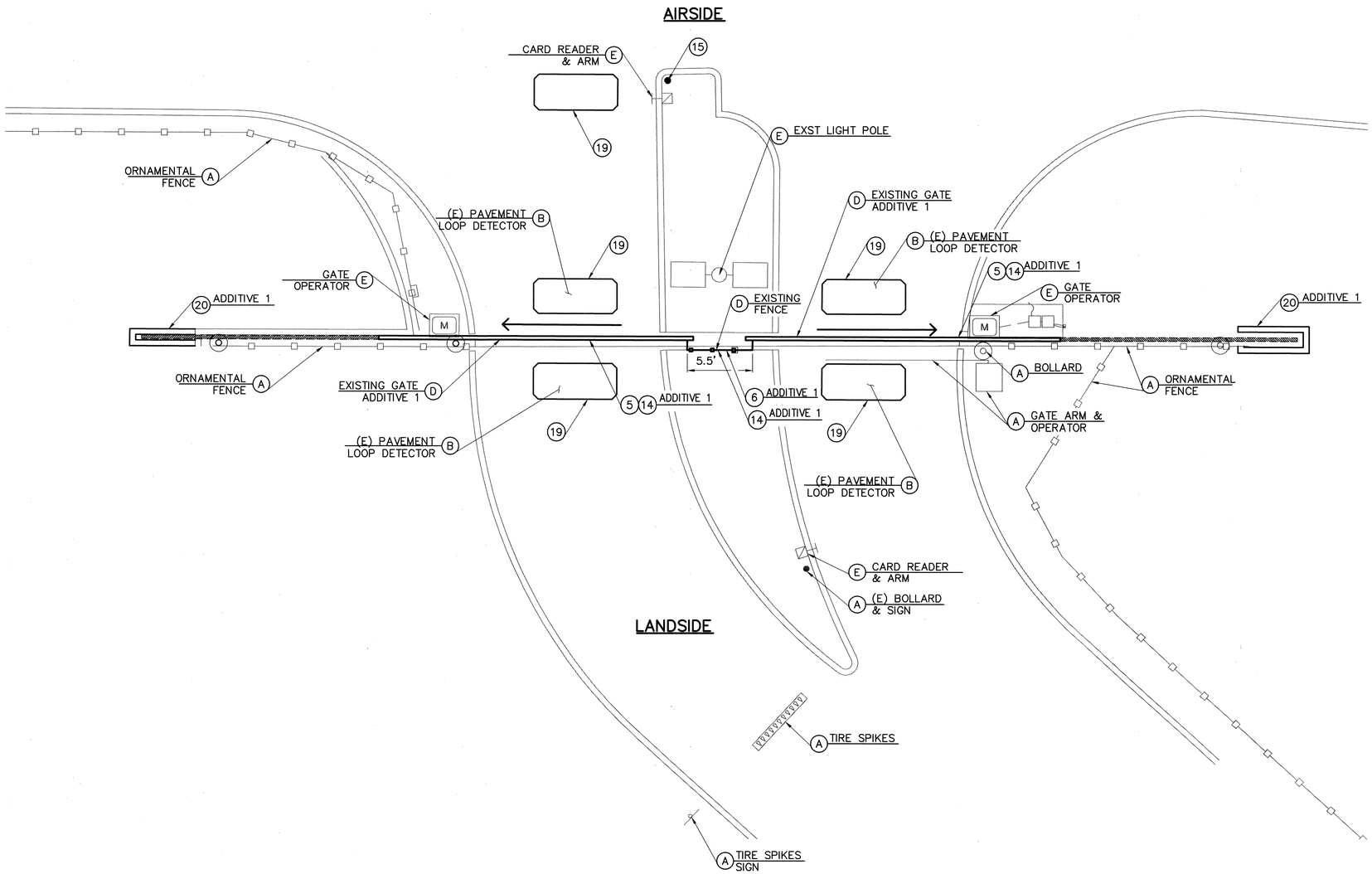

GATE F – HANGAR ACCESS

SCALE: 1"=5'

1

DISPOSITION NOTES

(A) PROTECT IN PLACE.

(B) ABANDON IN PLACE.

(E) SEE ELEC. PLAN FOR DISPOSITION.

CONSTRUCTION NOTES

(15) INSTALL BOLLARD PER CITY OF TORRANCE DRAWING T–501.

(19) INSTALL PAVEMENT LOOP DETECTOR.

LEGEND

—x— EXISTING CHAIN LINK FENCE TO REMAIN

—□— EXISTING ORNAMENTAL TO REMAIN

VEHICLE SLIDE GATE – ARROW INDICATES SLIDE DIRECTION

ADDITIVE (1) NOTES

(D) DEMOLISH AND REMOVE.

(5) CONSTRUCT ±6' HIGH, 16' WIDE ORNAMENTAL CANTILEVER SLIDE GATE PER SHEET C–D2.

(6) CONSTRUCT ±6' HIGH ORNAMENTAL FENCE PER DETAIL 2 ON SHEET C–D1.

(14) SALVAGE & REINSTALL EXISTING SIGNAGE.

(20) CONSTRUCT CURB & GUTTER, MATCH EXISTING.

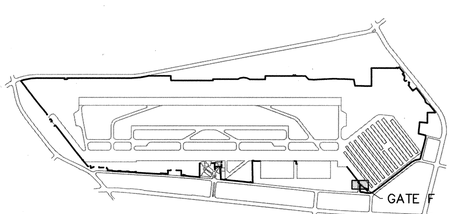

KEY MAP

SCALE: 1" = 5'

0 5' 10' 15'

REGISTERED PROFESSIONAL ENGINEER DUKE S. YOUNG No. C69209 Exp. 6/30/14 CIVIL STATE OF CALIFORNIA 10/01/13

PLANS PREPARED BY:

AECOM

999 Town & Country Road
Orange, CA 92868
Phone: 714.567.2501
Fax: 714.567.2441
www.aecom.com

REV	DATE	DESCRIPTION	BY	CHECKED

CITY OF TORRANCE
PUBLIC WORKS DEPARTMENT

ZAMPERINI FIELD SECURITY PROJECT, FEAP 616

GATE F - HANGAR ACCESS

DRAWN: AG

DESIGNED: DY

PROJECT ENGINEER: D. YOUNG

APPROVED: 10/10/13

CRAIG S. BILEZERIAN DATE
CITY ENGINEER
R.C.E. NO. 55339 EXP. 12/31/14

SCALE: 1"=5' SHEET 6 OF 42 C-02

PLAN NO. **AP-177**

10/02/13 16:03 P:\60289818 Zamperini Field\000_CAD\006_Civil\Sheets\C-02.dwg

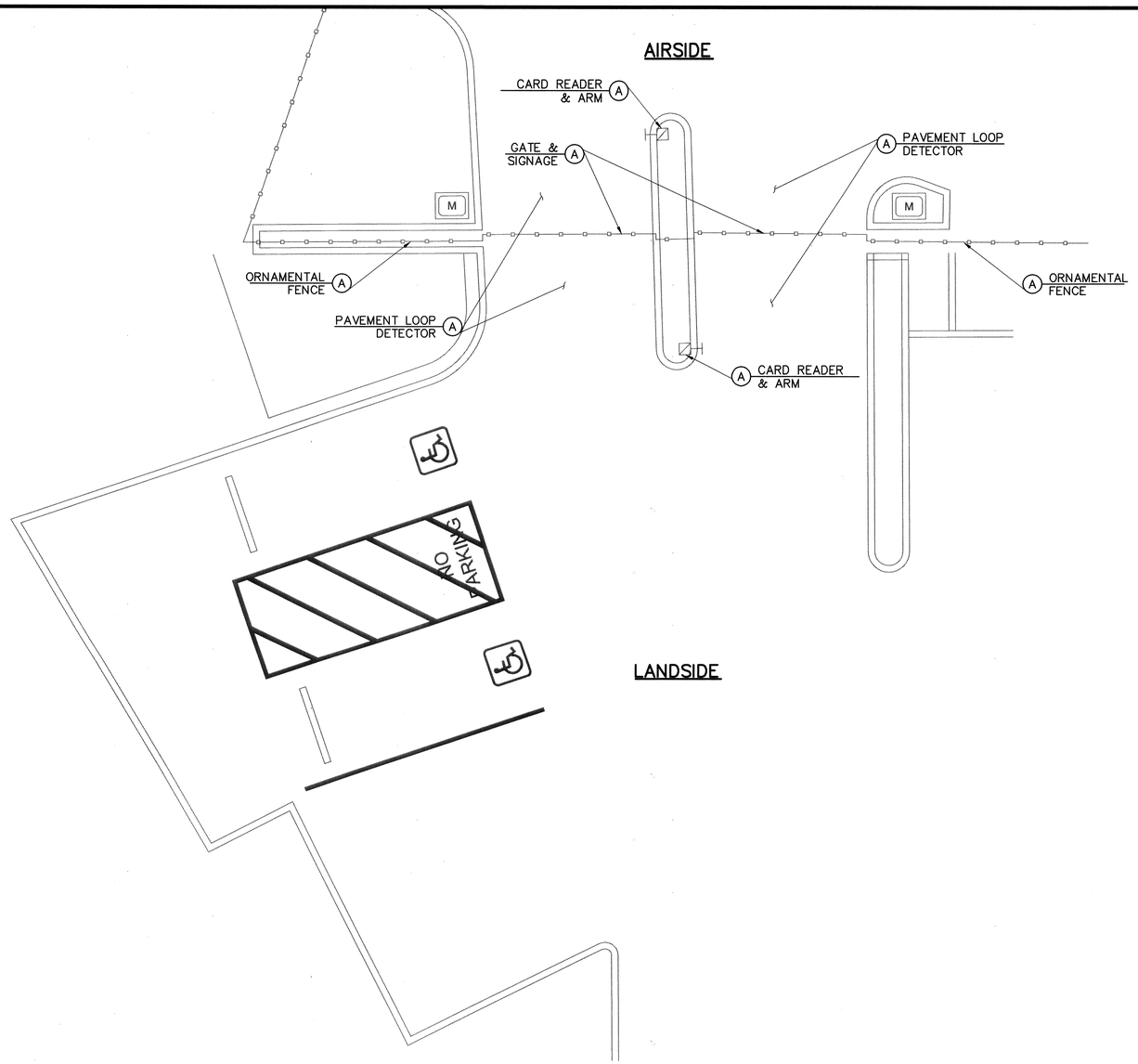

GATE R – FLITE PARK (1)

SCALE: 1"=5'

LEGEND

—x— EXISTING CHAIN LINK FENCE TO REMAIN

—□— EXISTING ORNAMENTAL TO REMAIN

DISPOSITION NOTES

(A) PROTECT IN PLACE.

NO CIVIL WORK

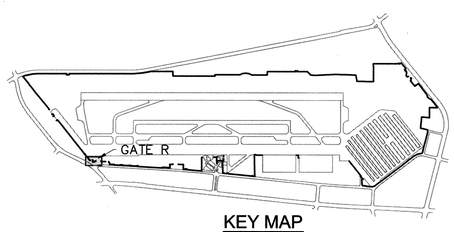

KEY MAP

SCALE: 1" = 5'

0 5' 10' 15'

REGISTERED PROFESSIONAL ENGINEER DUKE S. YOUNG No. C69209 Exp. 6/30/14 CIVIL STATE OF CALIFORNIA 10/10/13

PLANS PREPARED BY:

AECOM

999 Town & Country Road
Orange, CA 92868
Phone: 714.567.2501
Fax: 714.567.2441
www.aecom.com

REV	DATE	DESCRIPTION	BY	CHECKED

CITY OF TORRANCE
PUBLIC WORKS DEPARTMENT
ZAMPERINI FIELD SECURITY PROJECT, FEAP 616
GATE R - FLITE PARK

DRAWN: AG

APPROVED: 10/10/13

DESIGNED: DY

CRAIG S. BILEZERIAN DATE
CITY ENGINEER
R.C.E. NO. 55339 EXP. 12/31/14

PROJECT ENGINEER: D. YOUNG

SCALE: 1"=5' SHEET 7 OF 42 C-03

PLAN NO. **AP-177**

10/02/13 16:37 P:\60298818 Zamperini Field\000_CAD\000_Civil\Sheets\C-03.dwg

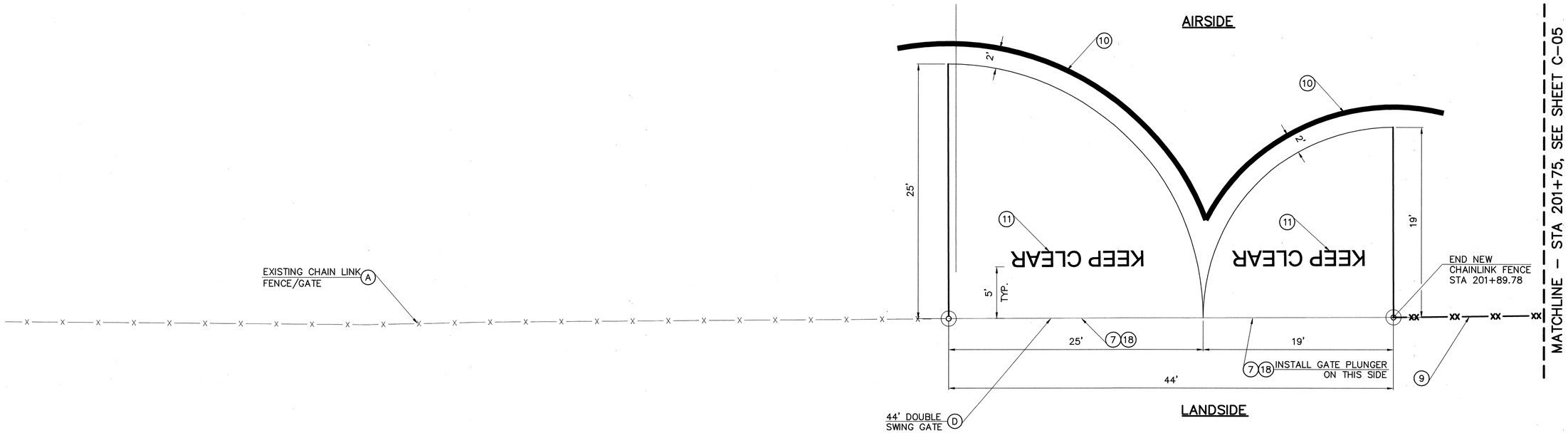

NOTE: CONTRACTOR SHALL PROVIDE PAD LOCK.

GATE O
SCALE: 1"=5'
1

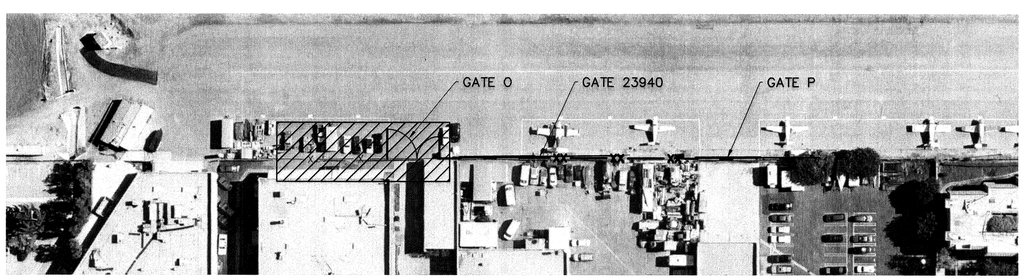

OVERALL VIEW

DISPOSITION NOTES

(A) PROTECT IN PLACE.

(D) DEMOLISH AND REMOVE.

CONSTRUCTION NOTES

(7) CONSTRUCT 8' HIGH, 44' WIDE DOUBLE LEAF SWING GATE PER DETAIL 2 ON SHEET C-D1.

(9) CONSTRUCT 8' HIGH CHAINLINK FENCE PER DETAIL 1 ON SHEET C-D1.

(10) PAINT 4" WHITE STRIPE.

(11) PAINT "KEEP CLEAR" WHITE PAVEMENT MARKING, 2' HIGH LETTERING.

(18) INSTALL GATE SIGNAGE PER DETAIL 1 ON SHEET S-01.

LEGEND

—x— EXISTING CHAIN LINK FENCE TO REMAIN

—□— EXISTING ORNAMENTAL TO REMAIN

—xx— PROPOSED CHAIN LINK FENCE

VEHICLE SWING GATE

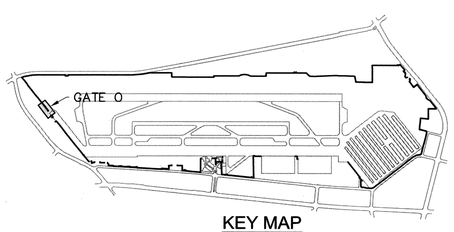

KEY MAP

SCALE: 1" = 5'

0 5' 10' 15'

REGISTERED PROFESSIONAL ENGINEER DUKE S. YOUNG No. C69209 Exp. 6/30/14 CIVIL STATE OF CALIFORNIA 10/09/13

PLANS PREPARED BY:

AECOM

999 Town & Country Road
Orange, CA 92868
Phone: 714.567.2501
Fax: 714.567.2441
www.aecom.com

REV	DATE	DESCRIPTION	BY	CHECKED

CITY OF TORRANCE
PUBLIC WORKS DEPARTMENT
ZAMPERINI FIELD SECURITY PROJECT, FEAP 616
GATE O

DRAWN: AG	APPROVED: 8Be 10/10/13		
DESIGNED: DY	CRAIG S. BILEZERIAN CITY ENGINEER R.C.E. NO. 55339	DATE EXP. 12/31/14	
PROJECT ENGINEER: D. YOUNG	SCALE: 1"=5'	SHEET 8 OF 42	C-04
	PLAN NO.	AP-177	

10/02/13 16:03 P:\60298618 Zamperini Field\00_CAD\00_Civil\Sheets\C-04.dwg

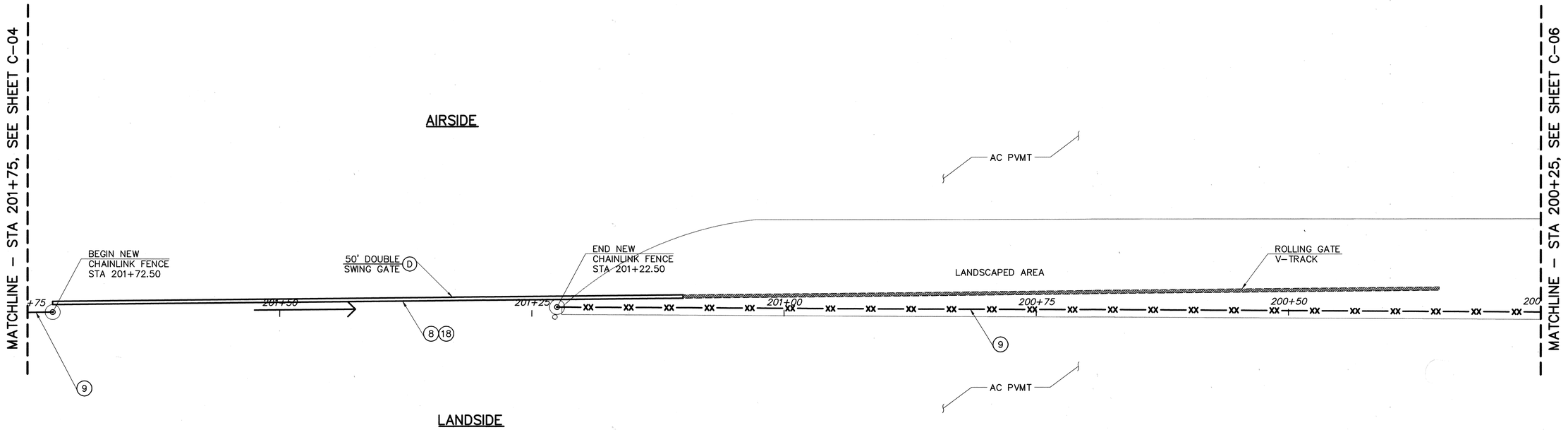

NOTE: CONTRACTOR SHALL PROVIDE METAL CHAIN AND PAD LOCK.

GATE 23940
SCALE: 1"=5'

1

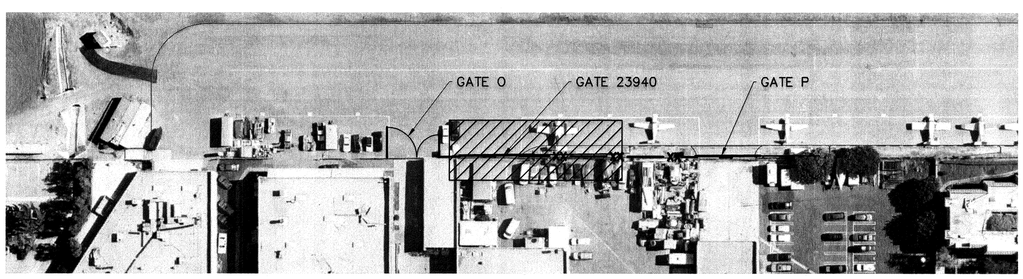

OVERALL VIEW

DISPOSITION NOTES

(D) DEMOLISH AND REMOVE.

CONSTRUCTION NOTES

(8) CONSTRUCT 8' HIGH, 50' WIDE CHAINLINK V-TRACK ROLLING GATE PER SHEET C-D3.

(9) CONSTRUCT 8' HIGH CHAINLINK FENCE PER DETAIL 1 ON SHEET C-D1.

(18) INSTALL GATE SIGNAGE PER DETAIL 1 ON SHEET S-01.

LEGEND

- PROPOSED CHAIN LINK FENCE
- EXISTING CHAIN LINK FENCE TO REMAIN
- EXISTING ORNAMENTAL TO REMAIN
- VEHICLE SLIDE GATE – ARROW INDICATES SLIDE DIRECTION

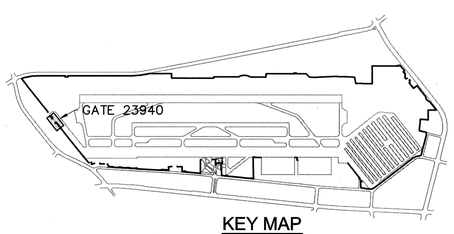

KEY MAP

SCALE: 1" = 5'

0 5' 10' 15'

REGISTERED PROFESSIONAL ENGINEER DUKE S. YOUNG No. C69209 Exp. 6/30/14 STATE OF CALIFORNIA 10/01/13

PLANS PREPARED BY:

AECOM

999 Town & Country Road
Orange, CA 92868
Phone: 714.567.2501
Fax: 714.567.2441
www.aecom.com

REV	DATE	DESCRIPTION	BY	CHECKED

CITY OF TORRANCE
PUBLIC WORKS DEPARTMENT
ZAMPERINI FIELD SECURITY PROJECT, FEAP 616
GATE 23940

DRAWN: AG
APPROVED: 10/10/13
DESIGNED: DY
CRAIG S. BILEZERIAN DATE
CITY ENGINEER
R.C.E. NO. 55339 EXP. 12/31/14
PROJECT ENGINEER: D. YOUNG
SCALE: 1"=5'
SHEET 9 OF 42
C-05
PLAN NO. **AP-177**

10/02/13 16:03 P:\60268918 Zamperini Field\DOL_CAD\DOL_Civil\Sheets\C-05.dwg

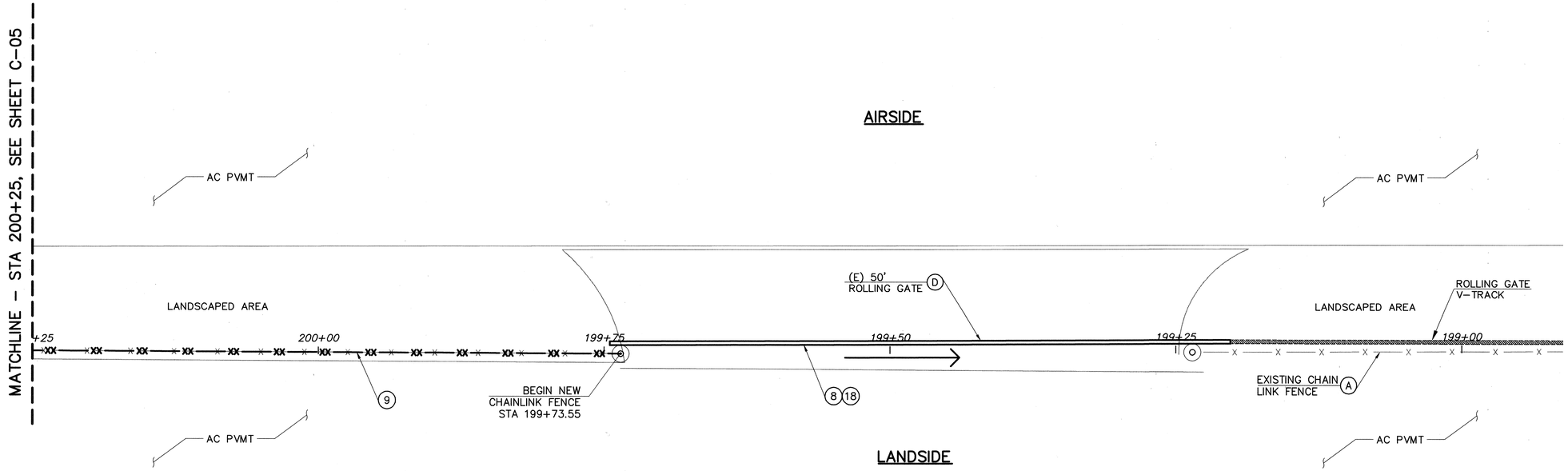

NOTE: CONTRACTOR SHALL PROVIDE METAL CHAIN AND PAD LOCK.

GATE P (1)
SCALE: 1"=5'

DISPOSITION NOTES

(A) PROTECT IN PLACE.

(D) DEMOLISH AND REMOVE.

CONSTRUCTION NOTES

(8) CONSTRUCT 8' HIGH, 50' WIDE CHAINLINK V-TRACK ROLLING GATE PER SHEET C-D3.

(9) CONSTRUCT 8' HIGH CHAINLINK FENCE PER DETAIL 1 ON SHEET C-D1.

(18) INSTALL GATE SIGNAGE PER DETAIL 1 ON SHEET S-01.

LEGEND

PROPOSED CHAIN LINK FENCE

EXISTING CHAIN LINK FENCE TO REMAIN

EXISTING ORNAMENTAL TO REMAIN

VEHICLE SLIDE GATE – ARROW INDICATES SLIDE DIRECTION

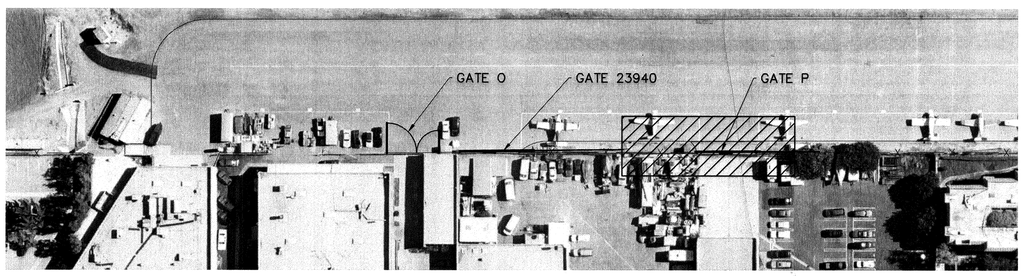

OVERALL VIEW

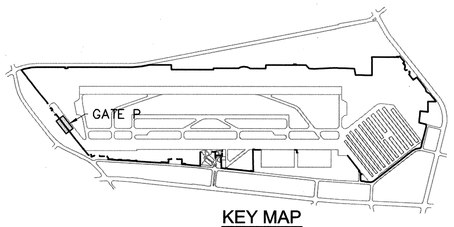

KEY MAP

SCALE: 1" = 5'
0 5' 10' 15'

REGISTERED PROFESSIONAL ENGINEER DUKE S. YOUNG No. C69209 Exp. 6/30/14 CIVIL STATE OF CALIFORNIA 10/01/13

PLANS PREPARED BY:

AECOM

999 Town & Country Road
Orange, CA 92868
Phone: 714.567.2501
Fax: 714.567.2441
www.aecom.com

REV	DATE	DESCRIPTION	BY	CHECKED

CITY OF TORRANCE
PUBLIC WORKS DEPARTMENT
ZAMPERINI FIELD SECURITY PROJECT, FEAP 616
GATE P

DRAWN: AG
APPROVED: 10/10/13
CRAIG S. BILEZERIAN DATE
CITY ENGINEER
R.C.E. NO. 55339 EXP. 12/31/14
DESIGNED: DY
PROJECT ENGINEER: D. YOUNG
SCALE: 1"=5'
SHEET 10 OF 42
C-06
PLAN NO. **AP-177**

10/02/13 16:04 P:\60298818 Zamperini Field\000_CAD\006_Civil\Sheets\C-06.dwg

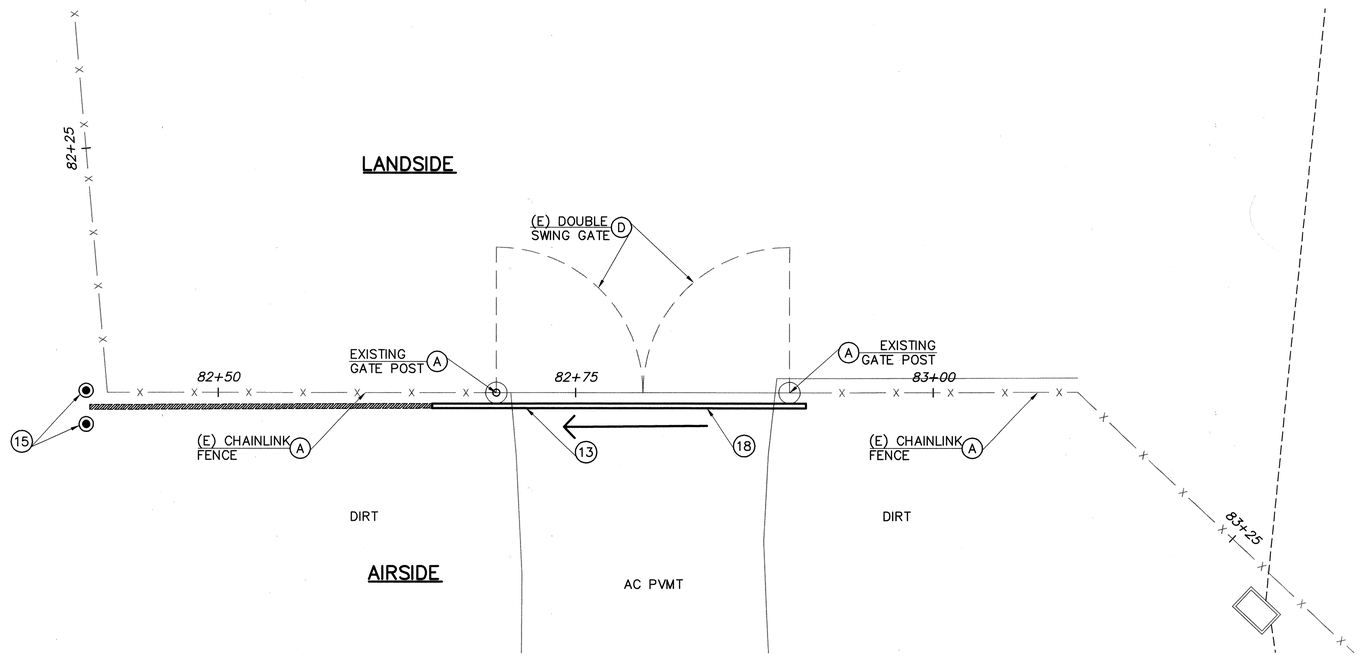

NOTE: CONTRACTOR SHALL PROVIDE METAL CHAIN AND PAD LOCK.

GATE I
SCALE: 1"=5'

1

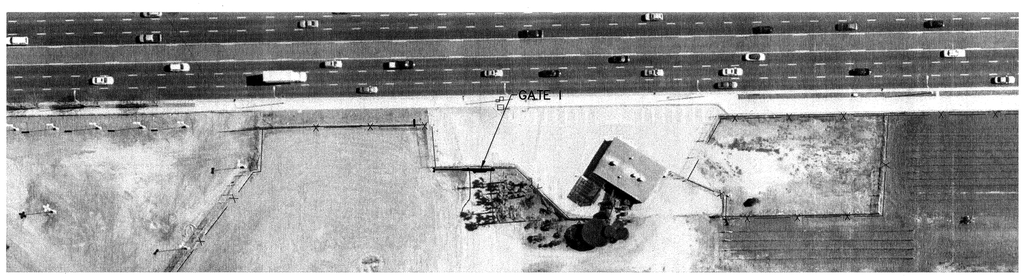

OVERALL VIEW

DISPOSITION NOTES

(A) PROTECT IN PLACE.

(D) DEMOLISH AND REMOVE.

CONSTRUCTION NOTES

(13) CONSTRUCT 8' HIGH, 20' WIDE CHAINLINK CANTILEVER SLIDE GATE PER SHEET C-D2.

(15) INSTALL BOLLARD PER CITY OF TORRANCE DRAWING T-501.

(18) INSTALL GATE SIGNAGE PER DETAIL 1 ON SHEET S-01.

LEGEND

—x— EXISTING CHAIN LINK FENCE TO REMAIN

—□— EXISTING ORNAMENTAL TO REMAIN

VEHICLE SLIDE GATE – ARROW INDICATES SLIDE DIRECTION

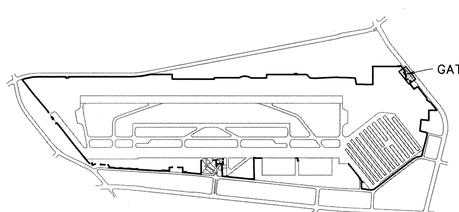

KEY MAP

SCALE: 1" = 5'

0 5' 10' 15'

REGISTERED PROFESSIONAL ENGINEER DUKE S. YOUNG No. C69209 Exp. 6/30/14 STATE OF CALIFORNIA 10/01/13

PLANS PREPARED BY:

AECOM

999 Town & Country Road
Orange, CA 92868
Phone: 714.567.2501
Fax: 714.567.2441
www.aecom.com

REV	DATE	DESCRIPTION	BY	CHECKED

CITY OF TORRANCE
PUBLIC WORKS DEPARTMENT
ZAMPERINI FIELD SECURITY PROJECT, FEAP 616
GATE I

DRAWN: AG	APPROVED: 10/10/13	
DESIGNED: DY	CRAIG S. BILEZERIAN CITY ENGINEER R.C.E. NO. 55339	DATE EXP. 12/31/14
PROJECT ENGINEER: D. YOUNG	SCALE: 1"=5'	SHEET 11 OF 42 — C-07
	PLAN NO.	AP-177

10/02/13 16:04 P:\60289818 Zamperini Field\000_CAD\006_Civil Sheets\C-07.dwg

NOTES:
1. BRACE ALL PULL, CORNER AND GATE POSTS AS SHOWN.
2. PULL POST SHALL BE INSTALLED EVERY 500 FEET OR AT BREAK IN GRADE.
3. TOP RAIL SHALL BE INSTALLED ALONG THE WHOLE LENGTH OF THE FENCE.
4. ALL FABRIC SHALL BE INSTALLED ON LAND SIDE OF FENCE.
5. SECURE DRIVE-FIT GALVANIZED LOOP CAP TO POST WITH 6MM (1/4") ROUND HEAD RIVET.

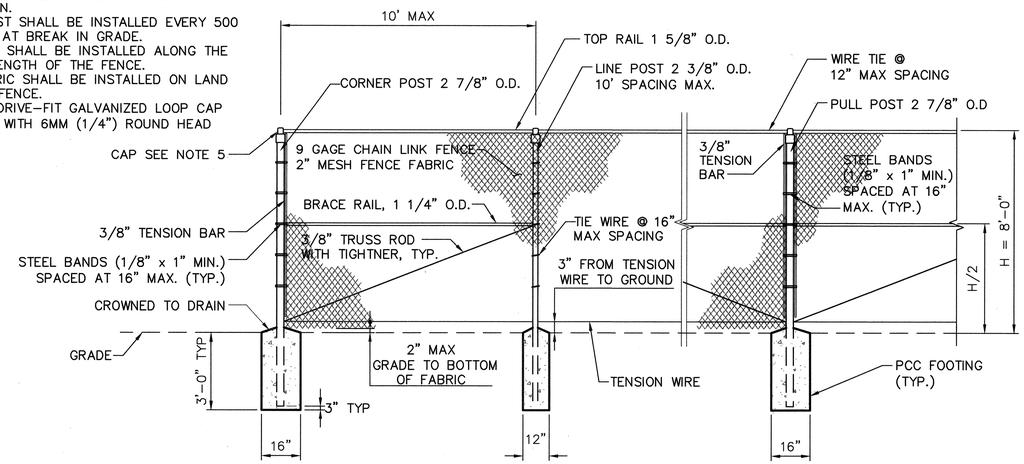

GROUND ROD NOTE:

ELECTRICAL GROUNDS SHALL BE CONSTRUCTED AT 500-FOOT INTERVALS. THE GROUND SHALL BE ACCOMPLISHED WITH A COPPER CLAD ROD 8 FEET LONG AND A MINIMUM OF 5/8 INCH IN DIAMETER DRIVEN VERTICALLY UNTIL THE TOP IS 6 INCHES BELOW THE GROUND SURFACE. A NO. 6 SOLID COPPER CONDUCTOR SHALL BE CLAMPED TO THE ROD AND TO THE FENCE IN SUCH A MANNER THAT EACH ELEMENT OF THE FENCE IS GROUNDED.

CHAIN LINK FENCE (1)
SCALE: NOT TO SCALE

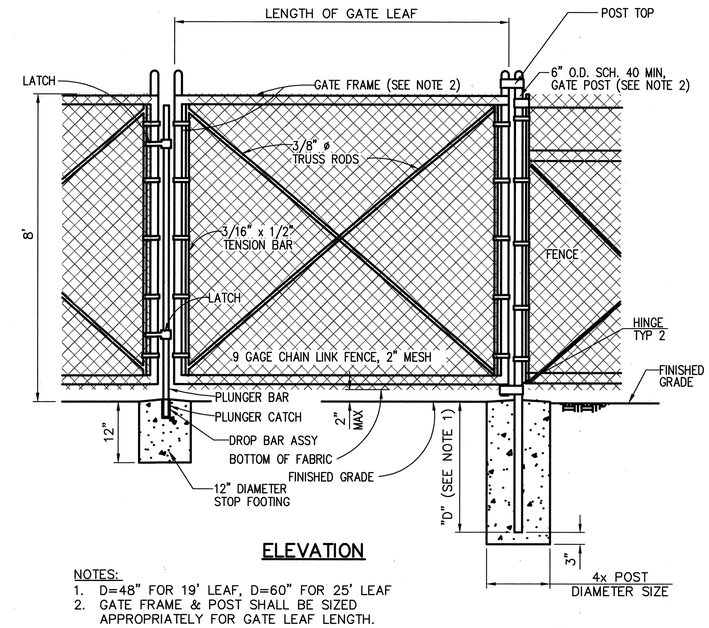

ELEVATION

NOTES:
1. D=48" FOR 19' LEAF, D=60" FOR 25' LEAF
2. GATE FRAME & POST SHALL BE SIZED APPROPRIATELY FOR GATE LEAF LENGTH.

DOUBLE LEAF CHAIN LINK SWING GATE (2)
SCALE: NOT TO SCALE

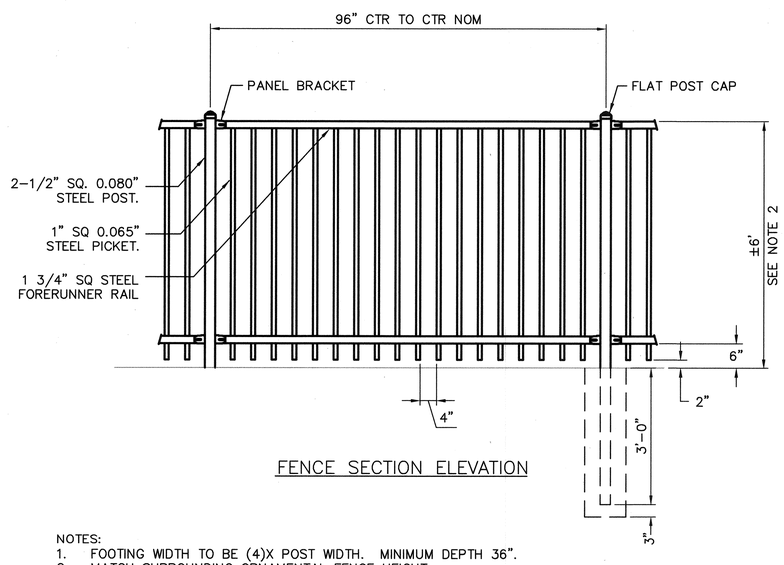

FENCE SECTION ELEVATION

NOTES:
1. FOOTING WIDTH TO BE (4)X POST WIDTH. MINIMUM DEPTH 36".
2. MATCH SURROUNDING ORNAMENTAL FENCE HEIGHT.

ORNAMENTAL FENCE (3)
SCALE: NOT TO SCALE

REGISTERED PROFESSIONAL ENGINEER DUKE S. YOUNG No. C69209 Exp. 6/30/14 STATE OF CALIFORNIA 10/01/13

PLANS PREPARED BY:

AECOM

999 Town & Country Road
Orange, CA 92868
Phone: 714.567.2501
Fax: 714.567.2441
www.aecom.com

REV	DATE	DESCRIPTION	BY	CHECKED

CITY OF TORRANCE
PUBLIC WORKS DEPARTMENT
ZAMPERINI FIELD SECURITY PROJECT, FEAP 616
CHAIN LINK & ORNAMENTAL FENCE DETAILS

DRAWN: PS
APPROVED: 10/10/13
DESIGNED: SQ
CRAIG S. BILEZERIAN DATE
CITY ENGINEER
R.C.E. NO. 55339 EXP. 12/31/14
PROJECT ENGINEER: D. YOUNG
SCALE: AS SHOWN
SHEET 12 OF 42
C-D1
PLAN NO. **AP-177**

10/02/13 16:04 P:\60288818 Zamperini Field\005_CAD\006_Civil\Sheets\C-D1.dwg

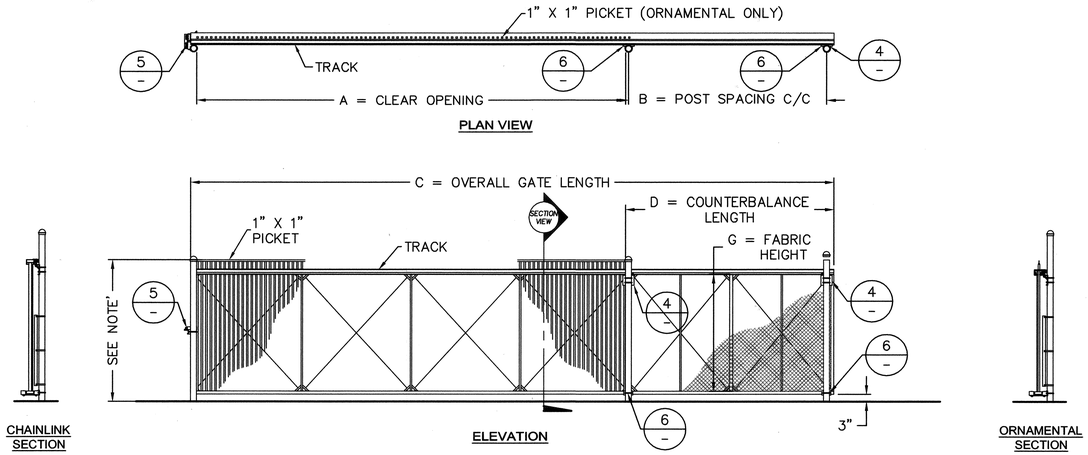

NOTE: GATE F, HEIGHT = ±6' (MATCH SURROUNDING ORNAMENTAL FENCE HEIGHT)
GATE I, HEIGHT = 8'.
FOR POST SIZE, SEE SPEC F-165.

ORNAMENTAL OR CHAINLINK CANTILEVER SLIDE GATE ELEVATION (1)

SCALE: NOT TO SCALE

CRITICAL DIMENSION CHART			
MARK	DESCRIPTION	FORMULA	DIM.
A	CLEAR OPENING	A	–
B	COUNTERBALANCE POST SPACING C/C	(A/2)–11"	–
C	OVERALL GATE LENGTH	A x 1.5	–
D	COUNTERBALANCE LENGTH	A x 0.5	–
E	NOMINAL GATE HEIGHT	E	–
F	POST HEIGHT	E	–
G	FABRIC HEIGHT	E – 1'–0"	–
H	POST HEIGHT	H = I	–
I	HEIGHT TO TOP OF PICKET	I	–
J	PICKET HEIGHT	J	–

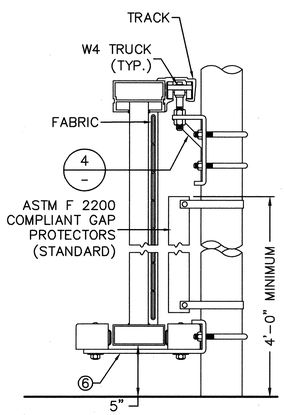

CHAINLINK CANTILIVER ENLARGED SECTION (2)

SCALE: NOT TO SCALE

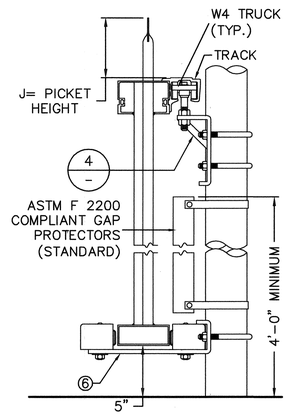

ORNAMENTAL CANTILIVER ENLARGED SECTION (3)

SCALE: NOT TO SCALE

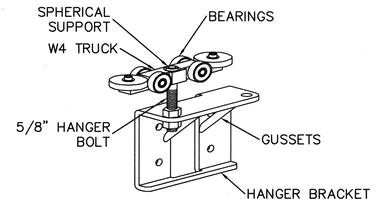

GATE HANGER ASSEMBLY DETAIL (4)

SCALE: NOT TO SCALE

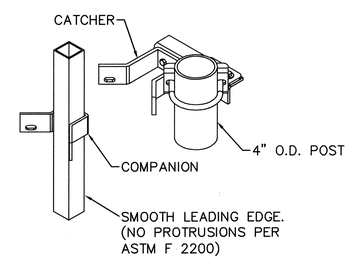

GATE CATCH ASSEMBLY DETAIL (5)

SCALE: NOT TO SCALE

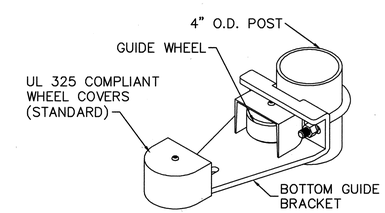

BOTTOM GUIDE DETAIL (6)

SCALE: NOT TO SCALE

NOTES:
1. ALL FITTINGS STANDARDLY PROVIDED FOR 4" O.D. POSTS. OTHER SIZES AVAILABLE UPON REQUEST.
2. OTHER PICKET STYLES AVAILABLE UPON REQUEST.

REGISTERED PROFESSIONAL ENGINEER DUKE S. YOUNG No. C69209 Exp. 6/30/14 STATE OF CALIFORNIA 10/01/13

PLANS PREPARED BY:
AECOM
999 Town & Country Road
Orange, CA 92868
Phone: 714.567.2501
Fax: 714.567.2441
www.aecom.com

REV	DATE	DESCRIPTION	BY	CHECKED

CITY OF TORRANCE
PUBLIC WORKS DEPARTMENT
ZAMPERINI FIELD SECURITY PROJECT, FEAP 616
CANTILEVER SLIDE GATE DETAILS

DRAWN: PS
DESIGNED: SQ
PROJECT ENGINEER: D. YOUNG
APPROVED: 10/10/13
CRAIG S. BILEZERIAN DATE
CITY ENGINEER
R.C.E. NO. 55339 EXP. 12/31/14
SCALE: AS SHOWN
SHEET 13 OF 42
C-D2
PLAN NO. **AP-177**

10/02/13 16:04 P:\60289818 Zamperini Field\DDL_CAD\DDE_Civil\Sheets\C-D2.dwg

OAL	"A"	"B"
>40'	10'	112"

NOTE:
GATE RIDES ON GALVANIZED STEEL V–TRACK. TRACK LENGTH IS TO BE EQUAL TO GATE OPENING PLUS OVERALL LENGTH OF GATE. TRACK TO BE EMBEDDED IN CONCRETE WITH LEVEL GRADE.

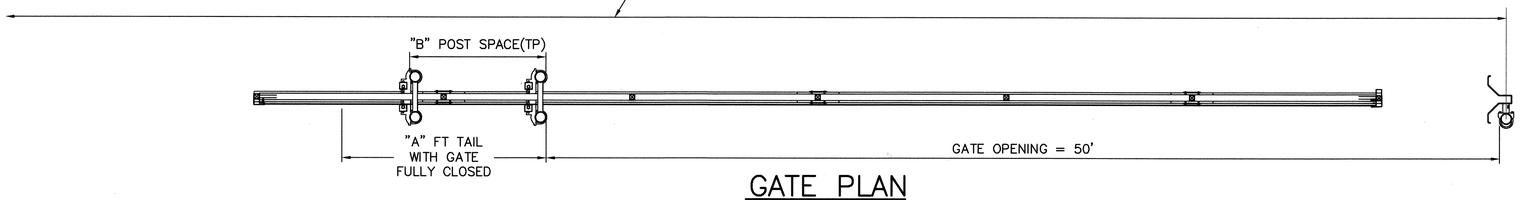

GATE PLAN

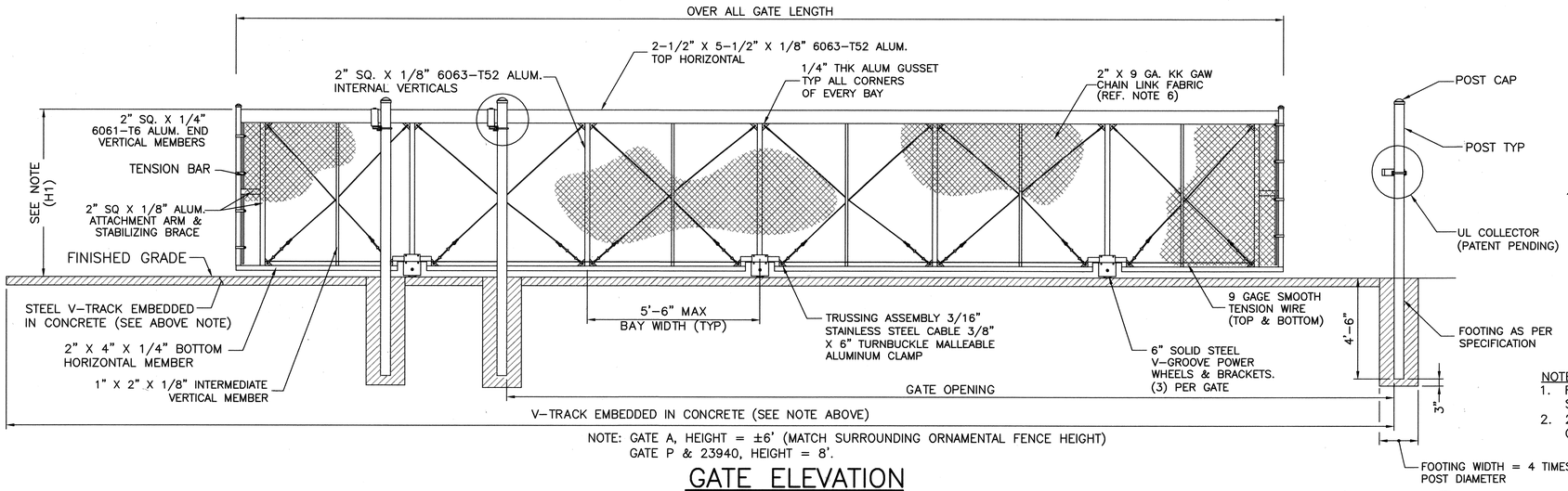

NOTE: GATE A, HEIGHT = ±6' (MATCH SURROUNDING ORNAMENTAL FENCE HEIGHT)
GATE P & 23940, HEIGHT = 8'.

GATE ELEVATION

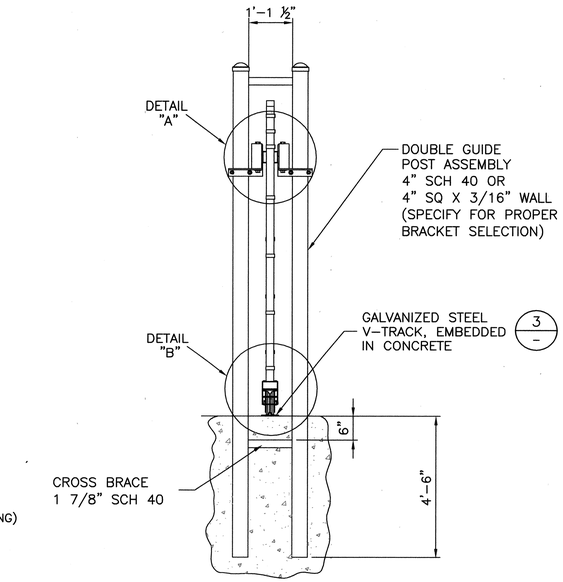

ROLL GATE
END VIEW

NOTES:
1. FRAME MATERIAL GRADE AS PER WRITTEN SPECIFICATIONS 5. ALL MATERIAL SHOWN SHALL BE NEW ALUMINUM UNLESS OTHERWISE NOTED.
2. 2" X 9 GA. GALVANIZED CHAIN LINK FABRIC TO COVER THE ENTIRE LENGTH OF GATE. OPTIONAL FILLER MATERIALS AVAILABLE UPON REQUEST.

ORNAMENTAL OR CHAINLINK V–TRACK ROLLING GATE

SCALE: NOT TO SCALE

1
–

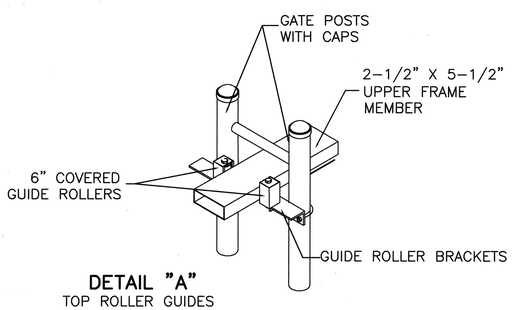

DETAIL "A"
TOP ROLLER GUIDES
(SOLD SEPERATELY)

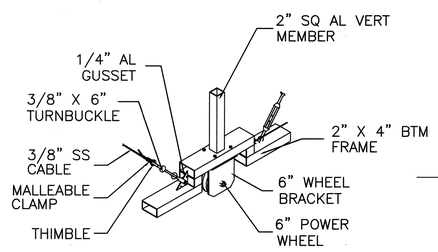

DETAIL "B"
WHEEL WELL
POWER WHEEL & BRACKET ASSEMBLY
AND TRUSS CABLE ASSEMBLY

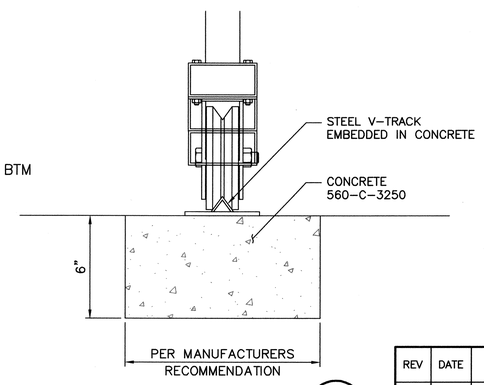

V–TRACK DETAIL

SCALE: NOT TO SCALE

3
–

V–TRACK ROLL GATE SECTION & DETAILS

SCALE: NOT TO SCALE

2
–

REGISTERED PROFESSIONAL ENGINEER DUKE S. YOUNG No. C69209 Exp. 6/30/14 STATE OF CALIFORNIA 10/01/13

PLANS PREPARED BY:

AECOM

999 Town & Country Road
Orange, CA 92868
Phone: 714.567.2501
Fax: 714.567.2441
www.aecom.com

REV	DATE	DESCRIPTION	BY	CHECKED

CITY OF TORRANCE
PUBLIC WORKS DEPARTMENT
ZAMPERINI FIELD SECURITY PROJECT, FEAP 616
V-TRACK ROLL GATE DETAILS

DRAWN: AG
APPROVED: 10/10/13
DESIGNED: DY
CRAIG S. BILEZERIAN DATE
CITY ENGINEER
R.C.E. NO. 55339 EXP. 12/31/14
PROJECT ENGINEER: D. YOUNG
SCALE: AS SHOWN SHEET 14 OF 42 C-D3
PLAN NO. **AP-177**

10/02/13 16:04 P:\60289818 Zamperini Field\100_CAD\006_Civil\Sheets\C-D3.dwg

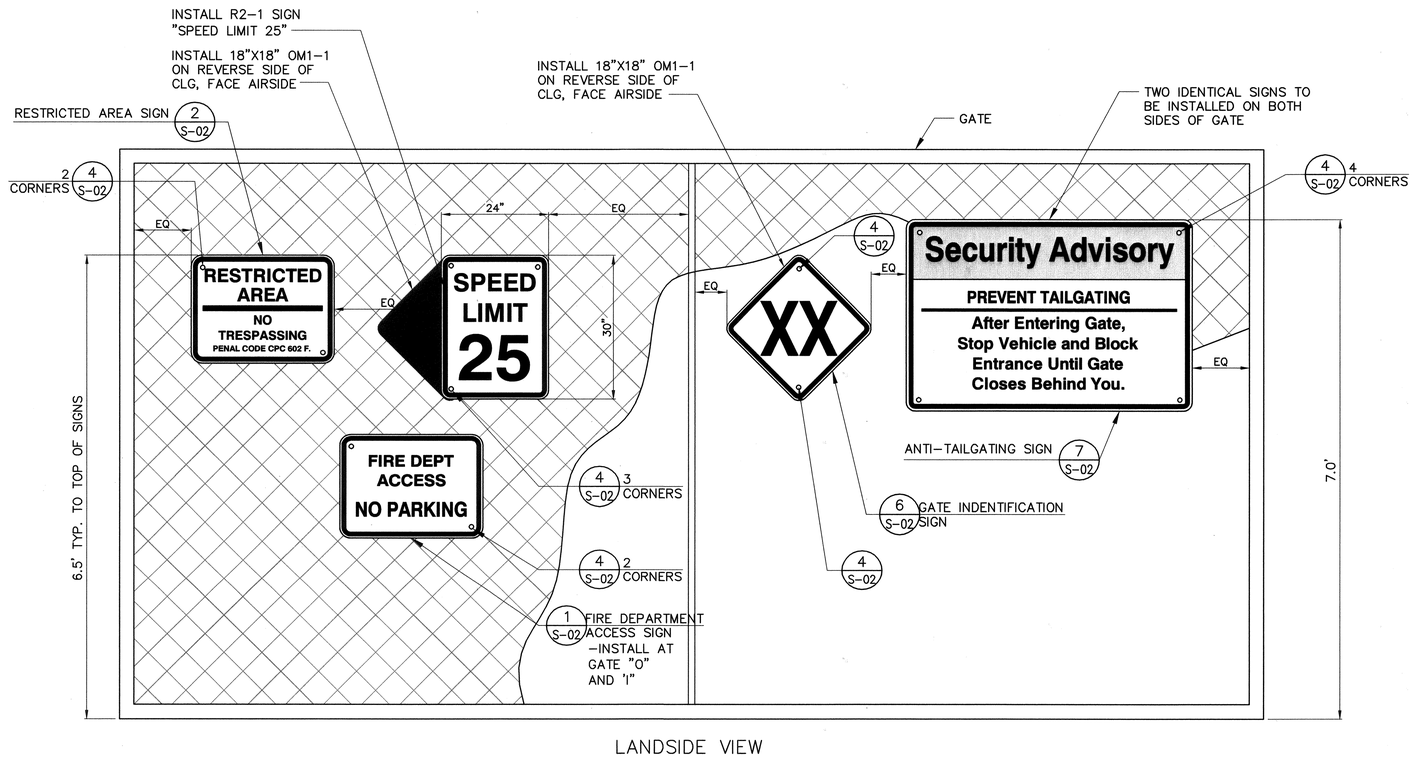

NOTE:
RESIDENT ENGINEER SHALL PROVIDE GATE NUMBERING.

TYPICAL VEHICLE GATE SIGN LAYOUT
SCALE: NTS

1 –

10/02/13 16:04 P:\60298818 Zamperini Field\DGL_CAD\DGN_Civil\Sheets\S-01.dwg

REGISTERED PROFESSIONAL ENGINEER DIKE S. YOUNG No. C69209 Exp. 6/30/14 CIVIL STATE OF CALIFORNIA 10/01/13

PLANS PREPARED BY:

AECOM

999 Town & Country Road
Orange, CA 92868
Phone: 714.567.2501
Fax: 714.567.2441
www.aecom.com

REV	DATE	DESCRIPTION	BY	CHECKED

CITY OF TORRANCE
PUBLIC WORKS DEPARTMENT
ZAMPERINI FIELD SECURITY PROJECT, FEAP 616
TYPICAL SIGN LAYOUT AT VEHICLE GATES

DRAWN: PS
DESIGNED: SQ
PROJECT ENGINEER: D. YOUNG

APPROVED: 10/10/13
CRAIG S. BILEZERIAN DATE
CITY ENGINEER
R.C.E. NO. 55339 EXP. 12/31/14

SCALE: AS SHOWN SHEET 15 OF 42 S-01
PLAN NO. AP-177

BLACK LEGEND & BORDER ON
WHITE RETROREFLECTIVE BACKGROUND

FIRE DEPARTMENT ACCESS SIGN (1)
SCALE: NTS

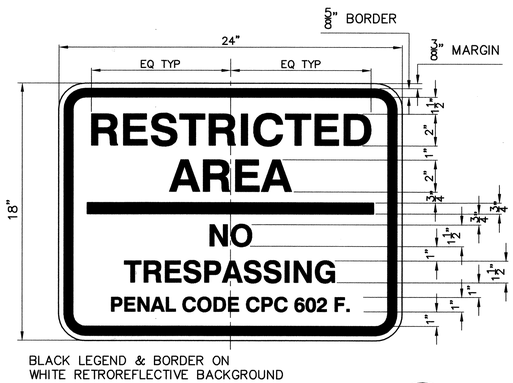

BLACK LEGEND & BORDER ON
WHITE RETROREFLECTIVE BACKGROUND

RESTRICTED AREA SIGN (2)
SCALE: NTS

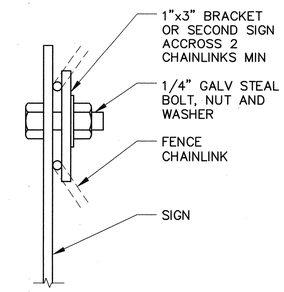

SIGN ATTACHMENT (4)
SCALE: NTS

GENERAL NOTE:
CENTER TEXT AND LEGENDS ON ALL SIGNS, UNLESS NOTED OTHERWISE.

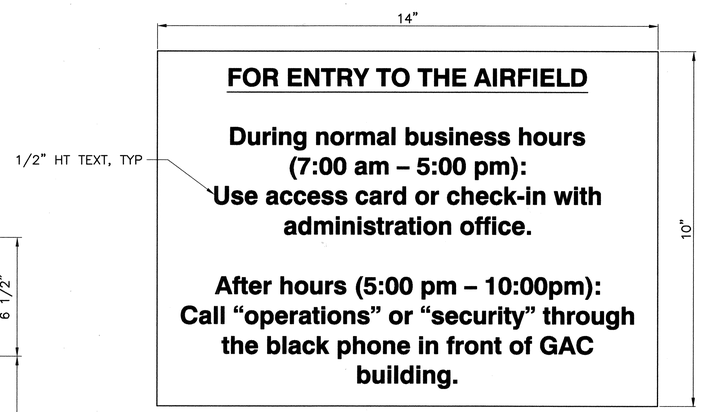

BLACK LEGEND ON
WHITE BACKGROUND

NOTE:
LOCATION OF SIGN SHALL BE COORDINATED WITH THE RESIDENT ENGINEER.

ENTRY SIGN AT DOOR D1 (6)
SCALE: NTS

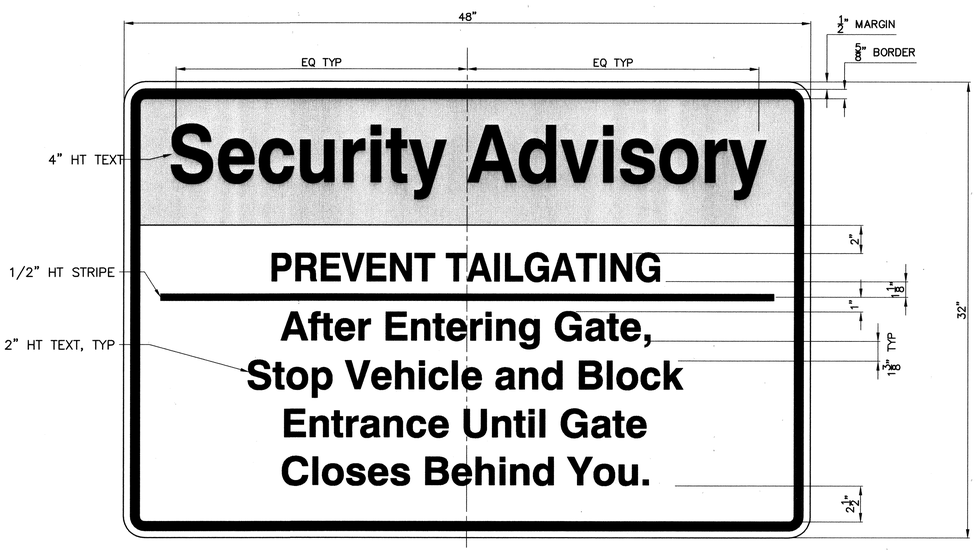

RED LEGEND & BLACK BORDER ON
WHITE RETROREFLECTIVE BACKGROUND

ANTI–TAILGATING SIGN (7)
SCALE: NTS

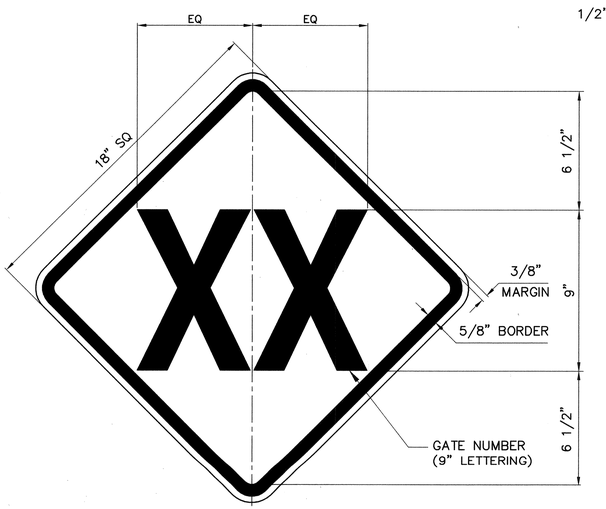

XX = GATE NUMBER PER RESIDENT ENGINEER

BLACK LEGEND ON
YELLOW RETROREFLECTIVE BACKGROUND

GATE INDENTIFICATION SIGN (6)
SCALE: NTS

REV	DATE	DESCRIPTION	BY	CHECKED

REGISTERED PROFESSIONAL ENGINEER DUKE S. YOUNG No. C69209 Exp. 6/30/14 CIVIL STATE OF CALIFORNIA 10/10/13

PLANS PREPARED BY:

AECOM

999 Town & Country Road
Orange, CA 92868
Phone: 714.567.2501
Fax: 714.567.2441
www.aecom.com

CITY OF TORRANCE
PUBLIC WORKS DEPARTMENT
ZAMPERINI FIELD SECURITY PROJECT, FEAP 616
SIGN DETAILS

DRAWN: PS
APPROVED: 10/10/13
CRAIG S. BILEZERIAN
CITY ENGINEER
R.C.E. NO. 55339
DATE
EXP. 12/31/14
DESIGNED: SQ
PROJECT ENGINEER: D. YOUNG
SCALE: AS SHOWN
SHEET 16 OF 42
S-02
PLAN NO. AP-177

10/02/13 16:04 P:\60288818 Zamperini Field\000_CAD\000_Civil\Sheets\S-02.dwg

ELECTRICAL NOTES

(E1) INSTALL PRECAST HANDHOLE PER DETAIL 1 ON SHEET E–D3.

(E2) INSTALL GATE OPERATOR PER DETAIL 1 ON SHEET E–D2.

(E3) INSTALL SMALL POWER PANEL PER DETAIL 3 ON SHEET E–D2.

(E4) HORIZONTAL BORE 4" CONDUIT BENEATH PAVEMENT.

(E5) INSTALL GATE UNINTERRUPTIBLE POWER SUPPLY (UPS) PER DETAIL 2 ON SHEET E–D2.

(E6) EXISTING WIRING TO BE REPLACED. SIZE AND QUANTITY OF WIRES TO MATCH EXISTING OR PER MANUFACTURERS RECOMMENDATION

(E7) INSTALL (2) 2P, 1ø 20A CIRCUIT BREAKER TO EXISTING PANEL.

(E8) NOTE NOT USED.

(E9) NOTE NOT USED.

(E10) INSTALL POLE MOUNTED AREA LIGHT PER DETAIL 1 ON SHEET E–D6.

(E11) INSTALL (2) 2P, 20A CIRCUIT BREAKER IN EXISTING PANEL SW FOR SURVEILLANCE CAMERA POWER. CIRCUIT BREAKER AIC RATING TO MATCH EXISTING.

(E12) INSTALL PRECAST PULLBOX PER DETAIL 2 ON SHEET E–D3.

(E13) LOCATE WIRING FEEDING THE EXISTING GATE OPERATORS AND CUT WIRES LEAVING SUFFICIENT LENGTH FOR SPLICING TO THE NEW INSTALLED UPS. SPLICES SHALL BE PERFORMED INSIDE EXISTING JUNCTION BOX FOR BOTH THE INCOMING AND LOAD SIDE OF THE UPS. WHERE CUT WIRES DO NOT HAVE SUFFICIENT LENGTH PULL NEW WIRES AND SPLICE ACCORDINGLY.

(E14) INSTALL ALPR CAMERA (12' ABOVE FINISH GRADE) & TERMINATION BOX ON POLE.

(E15) NEW LONG RANGE PROXIMITY CARD READER & PEDESTAL.

(E16) INSTALL FASCIA CHANNEL BAR FOR CONDUIT MOUNTING PER DETAIL 4 SHEET E–D5.

(E17) INSTALL (2) 175 W LED AREA LUMINAIRE, TWIN PER DETAIL 2 ON SHEET E–D5.

(E18) INSTALL 175 W LED AREA LUMINARE SINGLE ON ELL PIPE BRACKET PER DETAIL 1 ON SHEET E–D5.

(E19) EXISTING GATE OPERATOR TO BE REMOVED AND TURN OVER TO THE OWNER REPRESENTATIVE.

(E20) INSTALL (1) 20A, 2P CIRCUIT BREAKER IN EXISTING PANEL CIRCUIT BREAKER SPACE. CIRCUIT BREAKER AIC RATING TO MATCH EXISTING.

(E21) INSTALL (2) 20A, 2P CIRCUIT BREAKER IN EXISTING PANEL CIRCUIT BREAKER SPACE. CIRCUIT BREAKER AIC RATING TO MATCH EXISTING.

(E22) INSTALL PHOTOCELL ON HANGAR BUILDING PER DETAIL 1 ON SHEET E–D4.

(E23) INSTALL NEW WIRING TO NEW INSTALLED LED LIGHTING WIRING TO MATCH EXISTING. WIRING TO BE SPLICED WITH THE CAMERA CIRCUIT.

(E24) REMOVE EXISTING CONDUIT AND WIRING AND REPLACE WITH NEW 1' RGS W/2#10 & 1#10G.

(E25) EXISTING WIRING TO BE PROTECTED IN PLACE FOR RECONNECTION TO NEW MOTOR GATE OPERATOR.

(E26) INSTALL CONDUIT IN INTERIOR OF HANGAR PER DETAIL 4 ON SHEET E–D1.

(E27) INSTALL (2) 20A, 2P CB IN EXISTING PANEL CB SPACE. CB AIC RATING TO MATCH EXISTING.

(E28) REPLACE EXISTING 20A, 1P CIRCUIT BREAKER FEEDING GATE OPERATORS WITH (1) 20A, 1P CIRCUIT BREAKER.

(E29) REMOVE EXISTING WIRING FEEDING GATE OPERATORS AND ABANDON CONDUIT.

(E30) INSTALL SECURITY CAMERA ON POLE (12' ABOVE FINISHED GRADE). UNLESS NOTED OTHERWISE.

(E31) CONNECT NEW WIRES TO ALPR TERMINATION BOX NO SPLICES.

(E32) CUT EXISTING CONDUIT, INSTALL HANDHOLE AND EXTEND TO HANDHOLE.

(E33) SPLICE EXISTING LIGHTING FIXTURE WIRES TO NEW 2#10 & 1#12 GND.

(E34) EXISTING PANEL TO BE PAINTED WITH CITY APPROVED PAINT AND COLOR. PRIOR TO PAINTING REMOVE RUST AND APPLY APPROVED PRIMER PRIOR TO PAINTING.

(E35) AIM ALPR TO READ REAR LICENSE PLATE OF VEHICLES ENTERING THE AIRPORT.

(E36) SPLICE WIRING DEDICATED FOR UPS AND CAMERA. SPLICE GATE OPERATOR #2 EXISTING WIRING FROM UPS CIRCUIT. SPLICE LIGHT POLE EXISTING WIRING TO CAMERA CIRCUIT. ALL SPLICES INSIDE EXISTING JUNCTION BOX SHALL BE APPROVED TYPE SUITABLE FOR THE APPLICATION.

(E37) INSTALL (2) 175W LED, TWIN FIXTURE WITH PHOTOCELL ON EXISTING POLE. PROVIDE NEW MAST ARMS.

(E38) NOTE NOT USED.

(E39) INSTALL SECURITY CABINET WITH ACCESS CONTROL MODULE & SWITCH WITH FOUNDATION.

(E40) CONSTRUCT SECURITY POLE & FOUNDATION PER DETAIL 1 ON SHEET SE–02.

(E41) CONSTRUCT 20' POLE & FOUNDATION PER DETAIL 2 ON SHEET E–D6.

(E42) INSTALL WIRELESS NODE ON POLE, UNLESS NOTED OTHERWISE.

(E43) INSTALL 175W LED FIXTURE 15' MIN ABOVE FINISH GRADE ON HANGAR BUILDING.

(E44) INSTALL PHOTOCELL (MOUNTED ON FIXTURE).

(E45) PULL POWER & COMMUNICATION CABLES IN EXISTING CONDUIT FROM CARD READER TO SECURITY CABINET.

(E46) INSTALL 175W LED FIXTURE ON POLE 20' ABOVE FINISHED GRADE.

(E47) INSTALL (2) 20A, 2P TANDEM CIRCUIT BREAKERS IN PANEL 2 REMAINING SPACES. CIRCUIT BREAKERS AIC RATING TO MATCH EXISTING.

(E48) INSTALL ELECTRIC DOOR LOCK HARDWARE WITH BOLT POSITION AND/OR DOOR POSITION SWITCH (DPS)

(E49) INSTALL SECURITY CAMERA ON BUILDING, PER DETAIL 3 ON SHEET SE–02.

(E50) REMOVE AND REPLACE EXISTING GATE OPERATOR WITH NEW HYDRAULIC GATE OPERATOR.

LEGEND

EXISTING	NEW	
		(2) 175W LED AREA LUMINAIRE, TWIN
		175W LED AREA LUMINAIRE, SINGLE
		HOMERUN TO EXST 240V/120V PANEL
	PS	PHOTOCELL
		PANELBOARD
P		POWER PANEL
M		GATE OPERATOR
	HH	HANDHOLE "HH" OR PULL BOX "PB"
	UPS	UNINTERRUPTIBLE POWER SUPPLY
		POLE MOUNTED AREA LIGHT, 175W LED
	SC	SECURITY CABINET
		HANGAR
		SECURITY CAMERA, SEE "E" AND "SE" SHEETS
		AREA LIGHT TARGET COVERAGE AREA
		AUTOMATIC LICENSE PLATE READER
		ABANDON EXISTING CONDUIT
		REUSE EXISTING CONDUIT
		EXPOSED ELECTRICAL CONDUIT (FACIA OR WALL MOUNT)
		BURIED ELECTRICAL CONDUIT, 24" BELOW FINISHED GRADE
		HORIZONTAL BORING
		DRY CONTACTS
TB		TERMINAL BLOCKS, PER VENDOR–SUPPLIED ITEMS
	ASW	NETWORK SWITCH
		PROXIMITY CARD READER
	W	WIRELESS NODE
		ELECTRIC DOOR LOCK HARDWARE WITH BOLT POSITION AND/OR DOOR POSITION SWITCH (DPS)

NOTES ON ELECTRICAL CONNECTIONS

1. CONTRACTOR SHALL BE RESPONSIBLE FOR ALL ELECTRICAL IMPROVEMENTS SHOWN ON THE PLANS.
2. CONTRACTOR SHALL INSTALL HANDHOLES/JUNCTION BOXES AS REQUIRED PER NEC, PER FIELD CONDITIONS AND CABLE PULL LENGTHS.
3. CONTRACTOR TO TRACE AND NOTE ALL EXISTING CIRCUITS TO BE AFFECTED BY THIS PROJECT PRIOR TO CONSTRUCTION.
4. CONTRACTOR IS TO CONFIRM LOCATION AND TYPE OF ALL CONDUITS AND ASSOCIATED ELECTRICAL EQUIPMENT TO BE REUSED OR REMOVED.

DUCT NOTE:

1. SEE SHEET E–D1 FOR TYPICAL DUCT SECTIONS AND OTHER TYPICAL ELECTRICAL DETAILS.
2. CONTRACTOR TO INVESTIGATE EXTENT OF UNDERGROUND CONDUIT INSTALLED IN CONCRETE OR ASPHALT PAVEMENT PRIOR TO SAW CUTTING. BACKFILL EXCAVATION AND REPAIR TO MATCH EXISTING.
3. PVC CONDUITS SHALL BE INSTALLED FOR ALL UNDERGROUND APPLICATION. RGS CONDUITS SHALL BE INSTALLED FOR OUTDOOR, ABOVE GROUND APPLICATIONS AND PVC COATED FOR ALL BELOW GROUND TO ABOVE GROUND TRANSITIONS. UNLESS OTHERWISE NOTED.

LIGHTING NOTE:

1. SEE SHEET LT–6 FOR LUMINAIRE SCHEDULE.

ABBREVIATIONS:

AF	AMPERE FRAME
AFF	ABOVE FINISHED FLOOR
AIC	AMPS INTERRUPTING CURRENT
AOA	AIRSIDE OPERATIONS AREA
ASTM	AMERICAN SOCIETY OF TESTING ENGINEERS
AT	AMPERE TRIP
AWG	AMERICAN WIRE GAUGE
C	CONDUIT (WHEN USED W/ WIRE)
CB	CIRCUIT BREAKER
CCTV	CLOSE CIRCUIT TELEVISION
CKT	CIRCUIT
CO	CONDUIT ONLY
COMM	COMMUNICATION
CONC	CONCRETE
CU	COPPER
DN	DATA NETWORK FOR COMPUTER
DWG	DRAWING
DS	DISTRIBUTION SWITCHBOARD
DF	DEMAND FACTOR
ELECT	ELECTRICAL
ENGR	ENGINEER
EQPT	EQUIPMENT
EX, EXST	EXISTING
F.A.	FIRE ALARMS
F.S.	FUSE SIZE
F.W.	FRESH WATER
FLP	FLOOD LIGHTING POLE,
GN	GREEN
GND	GROUND
HMP	HIGH MAST POLE
HPS	HIGH PRESSURE SODIUM
HZ	HERTZ
HV	HIGH VOLTAGE
IC	INTERRUPTING CURRENT
JB	JUNCTION BOX
KCMIL	THOUSAND CIRCULAR MILS
KVA	KILOVOLT AMPERE
LC	LIGHTING CONTROL
LTG	LIGHTING
MS	MAIN SWITCHGEAR
MH	METAL HALIDE
NTS	NOT TO SCALE
NIC	NOT IN CONTRACT
NO., #	NUMBER
PL	POWER LOGIC
PNL	PANEL
PWR	POWER
PVC	POLYVINYL CHLORIDE
PTZ	PAN, TILT, ZOOM
RGS	RIGID GALVANIZED STEEL
RECPT	RECEPTACLE
REF	REFERENCE
SCH	SCHEDULE
SEC	SECURITY
SS	SECURITY SYSTEM
SSL	SANITARY SEWER LINE
SYM	SYMMETRICAL
TYP	TYPICAL
T,TEL	TELEPHONE
UL	UNDERWRITER'S LABORATORIES
UNO	UNLESS NOTED OTHERWISE
VPM	VOLTAGE POTENTIAL MODULE
W	WATT (S)
W/	WITH
W/O	WITHOUT
WP	WEATHER PROOF
XFMR	TRANSFORMER
2P	2 POLE
3P	3 POLE
3ø	3 PHASE
3W	3 WIRE

REGISTERED PROFESSIONAL ENGINEER BENJAMIN A. MOSCARITOLA C 51130 EXP. 9-30-14 ELECTRICAL STATE OF CALIFORNIA 10/03/13

PLANS PREPARED BY:

AECOM

999 Town & Country Road
Orange, CA 92868
Phone: 714.567.2501
Fax: 714.567.2441
www.aecom.com

REV	DATE	DESCRIPTION	BY	CHECKED

CITY OF TORRANCE
PUBLIC WORKS DEPARTMENT
ZAMPERINI FIELD SECURITY PROJECT, FEAP 616
ELECTRICAL GENERAL NOTES

DRAWN: PS
DESIGNED: NA
PROJECT ENGINEER: D. YOUNG

APPROVED: 10/10/13
CRAIG S. BILEZERIAN
CITY ENGINEER
R.C.E. NO. 55339 EXP. 12/31/14
DATE

SCALE: NA SHEET 17 OF 42 E-GN
PLAN NO. **AP-177**

10/02/13 16:04 P:\60288618 Zamperini Field\DDL\CAD\DDL_Civil\Sheets\E-GN.dwg

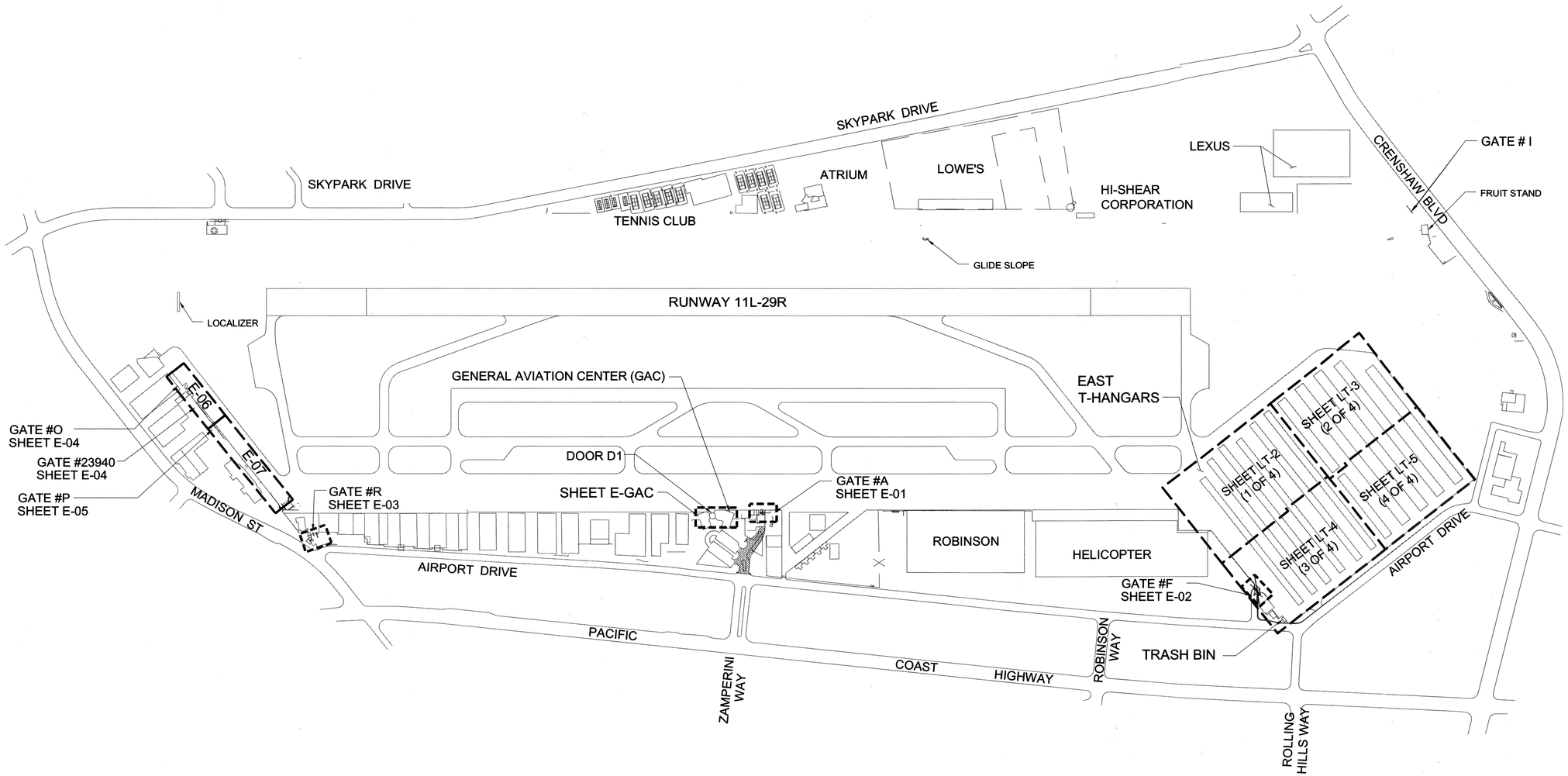

SCALE: 1" = 300'

0 300' 600' 1800'

PLANS PREPARED BY:

AECOM

999 Town & Country Road
Orange, CA 92868
Phone: 714.567.2501
Fax: 714.567.2441
www.aecom.com

REGISTERED PROFESSIONAL ENGINEER BENJAMIN A. MACDONALD No. E-30-14 ELECTRICAL STATE OF CALIFORNIA 10/01/13

REV	DATE	DESCRIPTION	BY	CHECKED

CITY OF TORRANCE
PUBLIC WORKS DEPARTMENT
ZAMPERINI FIELD SECURITY PROJECT, FEAP 616
ELECTRICAL OVERALL PLAN

DRAWN: PS
DESIGNED: AG
PROJECT ENGINEER: D. YOUNG

APPROVED: 10/10/13
CRAIG S. BILEZERIAN DATE
CITY ENGINEER
R.C.E. NO. 55339 EXP. 12/31/14

SCALE: 1"=300' SHEET 18 OF 42 E-OV

PLAN NO. **AP-177**

10/02/13 16:04 P:\60288418 Zamperini Field\000_CAD\006_Civil\Sheets\E-OV.dwg

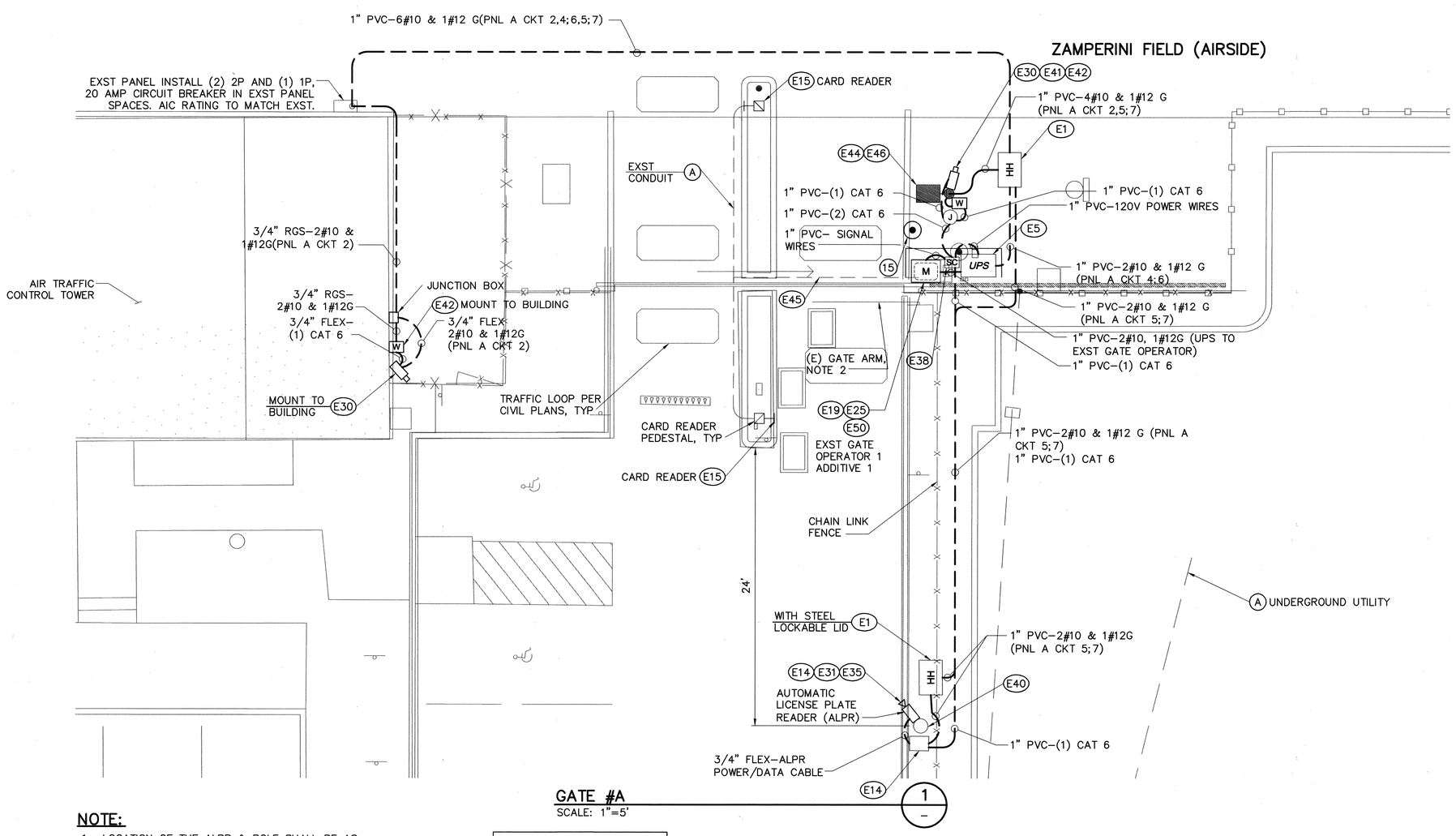

GATE #A
SCALE: 1"=5'
1
–

DISPOSITION NOTES

(A) PROTECT IN PLACE.

CONSTRUCTION NOTES

(15) INSTALL BOLLARD PER CITY OF TORRANCE DRAWING T-501.

ELECTRICAL NOTES

(E1) INSTALL PRECAST HANDHOLE PER DETAIL 1 ON SHEET E-D3.

(E5) INSTALL GATE UNINTERRUPTIBLE POWER SUPPLY (UPS) PER DETAIL 2 ON SHEET E-D2.

(E14) INSTALL ALPR CAMERA (12' ABOVE FINISH GRADE) & TERMINATION BOX ON POLE.

(E15) NEW LONG RANGE PROXIMITY CARD READER & PEDESTAL.

(E30) INSTALL SECURITY CAMERA ON POLE (12' ABOVE FINISHED GRADE). UNLESS NOTED OTHERWISE.

(E31) CONNECT NEW WIRES TO ALPR TERMINATION BOX NO SPLICES.

(E35) AIM ALPR TO READ REAR LICENSE PLATE OF VEHICLES ENTERING THE AIRPORT.

(E39) INSTALL SECURITY CABINET WITH ACCESS CONTROL MODULE & SWITCH WITH FOUNDATION.

(E40) CONSTRUCT SECURITY POLE & FOUNDATION PER DETAIL 1 ON SHEET SE-02.

(E41) CONSTRUCT 20' POLE & FOUNDATION PER DETAIL 2 ON SHEET E-D6.

(E42) INSTALL WIRELESS NODE ON POLE, UNLESS NOTED OTHERWISE.

(E43) INSTALL 175W LED FIXTURE 15' MIN ABOVE FINISH GRADE ON HANGAR BUILDING.

(E44) INSTALL PHOTOCELL (MOUNTED ON FIXTURE).

(E45) PULL POWER & COMMUNICATION CABLES IN EXISTING CONDUIT FROM CARD READER TO SECURITY CABINET.

(E46) INSTALL 175W LED FIXTURE ON POLE 20' ABOVE FINISHED GRADE.

ADDITIVE (1) NOTES

(E19) EXISTING GATE OPERATOR TO BE REMOVED AND TURN OVER TO THE OWNER REPRESENTATIVE.

(E25) EXISTING WIRING TO BE PROTECTED IN PLACE FOR RECONNECTION TO NEW MOTOR GATE OPERATOR.

(E50) REMOVE AND REPLACE EXISTING GATE OPERATOR WITH NEW HYDRAULIC GATE OPERATOR.

GENERAL NOTE:

LOCATION OF ALPR IS APPROXIMATE & MUST BE COORDINATED WITH PIPS TECHNOLOGY.

NOTE:

1. LOCATION OF THE ALPR & POLE SHALL BE AS RECOMMENDED BY PIPS TECHNOLOGY.
2. EXISTING GATE ARM SHALL BE POWERED FROM NEW GATE MOTOR UPS.
3. CONTRACTOR SHALL RE-ESTABLISH GATE ACCESS WITH STROBE SWITCH SYSTEM.

LEGEND

EXISTING	NEW	
P		POWER PANEL
M		GATE OPERATOR
	HH	HANDHOLE "HH" OR PULL BOX "PB"
	UPS	UNINTERRUPTIBLE POWER SUPPLY
	SC	SECURITY CABINET
	W	WIRELESS NODE
		SECURITY CAMERA, SEE "E" AND "SE" SHEETS
		AUTOMATIC LICENSE PLATE READER

LEGEND (CONT)

EXISTING	NEW	
—— ——	— — — —	BURIED ELECTRICAL CONDUIT, 24" BELOW FINISHED

SCALE: 1" = 5'
0 5' 10' 15'

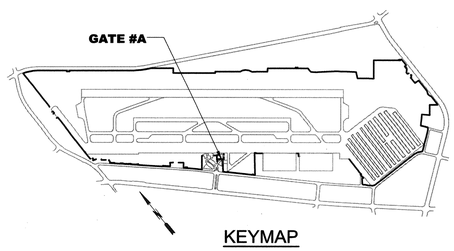

KEYMAP

REGISTERED PROFESSIONAL ENGINEER BENJAMIN A. MACARTHUR C 55130 EXP. 9-30-14 ELECTRICAL STATE OF CALIFORNIA
10/02/13

PLANS PREPARED BY:

AECOM

999 Town & Country Road
Orange, CA 92868
Phone: 714.567.2501
Fax: 714.567.2441
www.aecom.com

REV	DATE	DESCRIPTION	BY	CHECKED

CITY OF TORRANCE
PUBLIC WORKS DEPARTMENT
ZAMPERINI FIELD SECURITY PROJECT, FEAP 616
ELECTRICAL PLAN AT GATE A

DRAWN: PS
APPROVED: 10/10/13
DESIGNED: TB
CRAIG S. BILEZERIAN, CITY ENGINEER, R.C.E. NO. 55339, EXP. 12/31/14, DATE
PROJECT ENGINEER: D. YOUNG
SCALE: 1"=20'
SHEET 19 OF 42
E-01
PLAN NO. AP-177

10/02/13 16:03 P:\60289818 Zamperini Field\000_CAD\006_Civil\Sheets\E-01.dwg

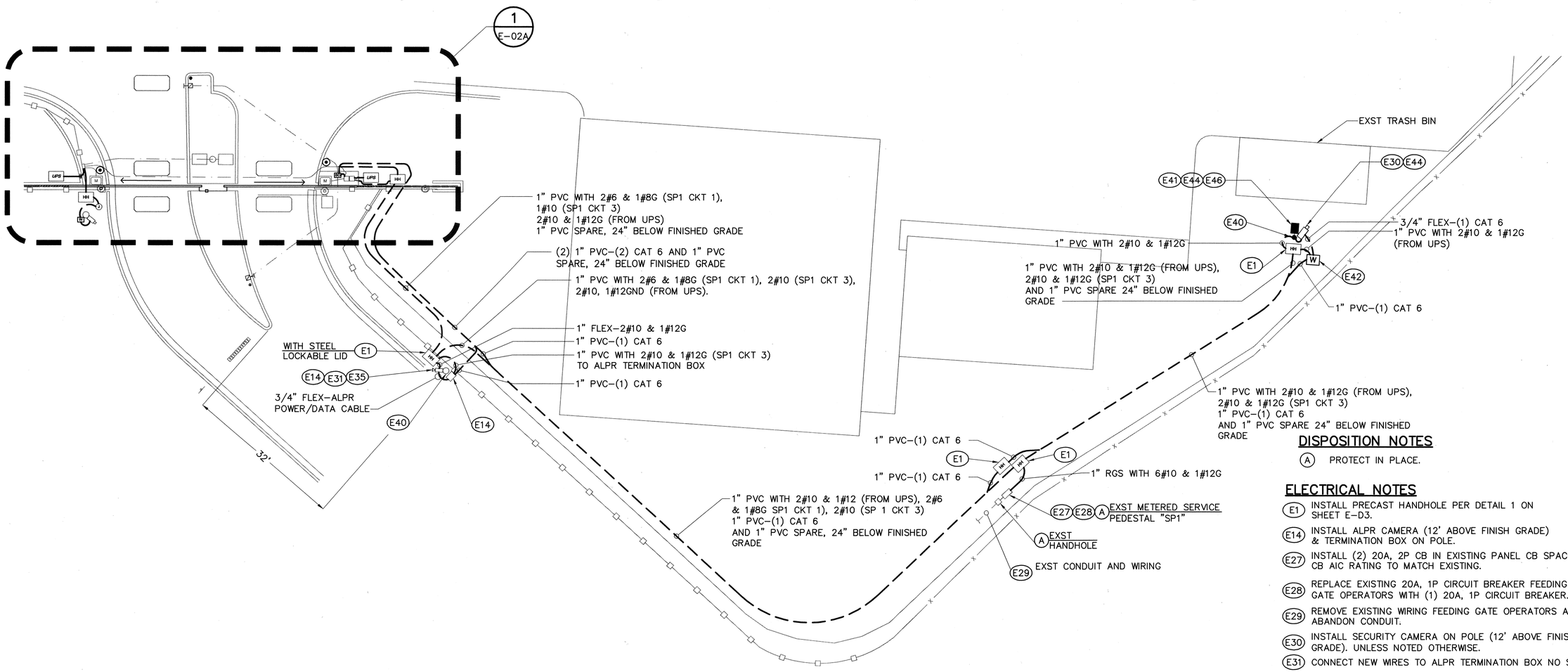

DISPOSITION NOTES

(A) PROTECT IN PLACE.

ELECTRICAL NOTES

(E1) INSTALL PRECAST HANDHOLE PER DETAIL 1 ON SHEET E-D3.

(E14) INSTALL ALPR CAMERA (12' ABOVE FINISH GRADE) & TERMINATION BOX ON POLE.

(E27) INSTALL (2) 20A, 2P CB IN EXISTING PANEL CB SPACE. CB AIC RATING TO MATCH EXISTING.

(E28) REPLACE EXISTING 20A, 1P CIRCUIT BREAKER FEEDING GATE OPERATORS WITH (1) 20A, 1P CIRCUIT BREAKER.

(E29) REMOVE EXISTING WIRING FEEDING GATE OPERATORS AND ABANDON CONDUIT.

(E30) INSTALL SECURITY CAMERA ON POLE (12' ABOVE FINISHED GRADE). UNLESS NOTED OTHERWISE.

(E31) CONNECT NEW WIRES TO ALPR TERMINATION BOX NO SPLICES.

(E35) AIM ALPR TO READ REAR LICENSE PLATE OF VEHICLES ENTERING THE AIRPORT.

(E40) CONSTRUCT SECURITY POLE & FOUNDATION PER DETAIL 1 ON SHEET SE-02.

(E41) CONSTRUCT 20' POLE & FOUNDATION PER DETAIL 2 ON SHEET E-D6.

(E42) INSTALL WIRELESS NODE ON POLE, UNLESS NOTED OTHERWISE.

(E44) INSTALL PHOTOCELL (MOUNTED ON FIXTURE).

(E46) INSTALL 175W LED FIXTURE ON POLE 20' ABOVE FINISHED GRADE.

LEGEND

EXISTING	NEW	
M		GATE OPERATOR
	HH	HANDHOLE "HH" OR PULL BOX "PB"
	UPS	UNINTERRUPTIBLE POWER SUPPLY
	SC	SECURITY CABINET
		ABANDON EXISTING CONDUIT
		REUSE EXISTING CONDUIT
		BURIED ELECTRICAL CONDUIT, 24" BELOW FINISHED
	W	WIRELESS NODE
		SECURITY CAMERA, SEE "E" AND "SE" SHEETS
		AUTOMATIC LICENSE PLATE READER

SCALE: 1" = 10'

0 5' 20' 30'

NOTE:

1. LOCATION OF THE ALPR & POLE SHALL BE AS RECOMMENDED BY PIPS TECHNOLOGY.

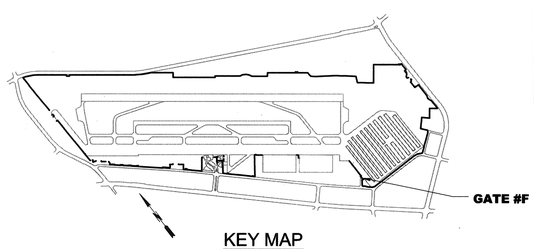

KEY MAP

REGISTERED PROFESSIONAL ENGINEER
BENJAMIN A. MACHADO
No. 6130
Exp. 9-30-14
ELECTRICAL
STATE OF CALIFORNIA
10/02/13

PLANS PREPARED BY:

AECOM

999 Town & Country Road
Orange, CA 92868
Phone: 714.567.2501
Fax: 714.567.2441
www.aecom.com

REV	DATE	DESCRIPTION	BY	CHECKED

CITY OF TORRANCE
PUBLIC WORKS DEPARTMENT
ZAMPERINI FIELD SECURITY PROJECT, FEAP 616
ELECTRICAL PLAN AT GATE F (OVERALL)

DRAWN: PS
APPROVED: 10/10/13
DESIGNED: TB
CRAIG S. BILEZERIAN
CITY ENGINEER
R.C.E. NO. 55339
DATE
EXP. 12/31/14
PROJECT ENGINEER: D. YOUNG
SCALE: 1"=20'
SHEET 20 OF 42
E-02
PLAN NO. **AP-177**

10/02/13 16:09 P:\60288818 Zamperini Field\000_CAD\006_Civil\Sheets\E-02.dwg

DISPOSITION NOTES

(A) PROTECT IN PLACE.

ELECTRICAL NOTES

(E1) INSTALL PRECAST HANDHOLE PER DETAIL 1 ON SHEET E-D3.

(E5) INSTALL GATE UNINTERRUPTIBLE POWER SUPPLY (UPS) PER DETAIL 2 ON SHEET E-D2.

(E6) EXISTING WIRING TO BE REPLACED. SIZE AND QUANTITY OF WIRES TO MATCH EXISTING OR PER MANUFACTURERS RECOMMENDATION

(E15) NEW LONG RANGE PROXIMITY CARD READER & PEDESTAL.

(E19) EXISTING GATE OPERATOR TO BE REMOVED AND TURN OVER TO THE OWNER REPRESENTATIVE.

(E24) REMOVE EXISTING CONDUIT AND WIRING AND REPLACE WITH NEW 1' RGS W/2#10 & 1#10G.

(E25) EXISTING WIRING TO BE PROTECTED IN PLACE FOR RECONNECTION TO NEW MOTOR GATE OPERATOR.

(E30) INSTALL SECURITY CAMERA ON POLE (12' ABOVE FINISHED GRADE). UNLESS NOTED OTHERWISE.

(E37) INSTALL (2) 175W LED, TWIN FIXTURE WITH PHOTOCELL ON EXISTING POLE. PROVIDE NEW MAST ARMS.

(E40) CONSTRUCT SECURITY POLE & FOUNDATION PER DETAIL 1 ON SHEET SE-02.

(E42) INSTALL WIRELESS NODE ON POLE, UNLESS NOTED OTHERWISE.

(E45) PULL POWER & COMMUNICATION CABLES IN EXISTING CONDUIT FROM CARD READER TO SECURITY CABINET.

LEGEND

EXISTING	NEW	
M		GATE OPERATOR
	HH	HANDHOLE "HH" OR PULL BOX "PB"
	UPS	UNINTERRUPTIBLE POWER SUPPLY
	SC	SECURITY CABINET
		ABANDON EXISTING CONDUIT
		REUSE EXISTING CONDUIT
		BURIED ELECTRICAL CONDUIT, 24" BELOW FINISHED
		HORIZONTAL BORING
	W	WIRELESS NODE
		SECURITY CAMERA, SEE "E" AND "SE" SHEETS

NOTE:
1. CONTRACTOR TO FIELD VERIFY EXISTING ELECTRICAL SYSTEM BEFORE PROCEEDING WITH THIS DESIGN.
2. EXISTING GATE ARM SHALL BE POWERED FROM NEW GATE MOTOR UPS.
3. CONTRACTOR SHALL RE-ESTABLISH GATE ACCESS WITH STROBE SWITCH SYSTEM.

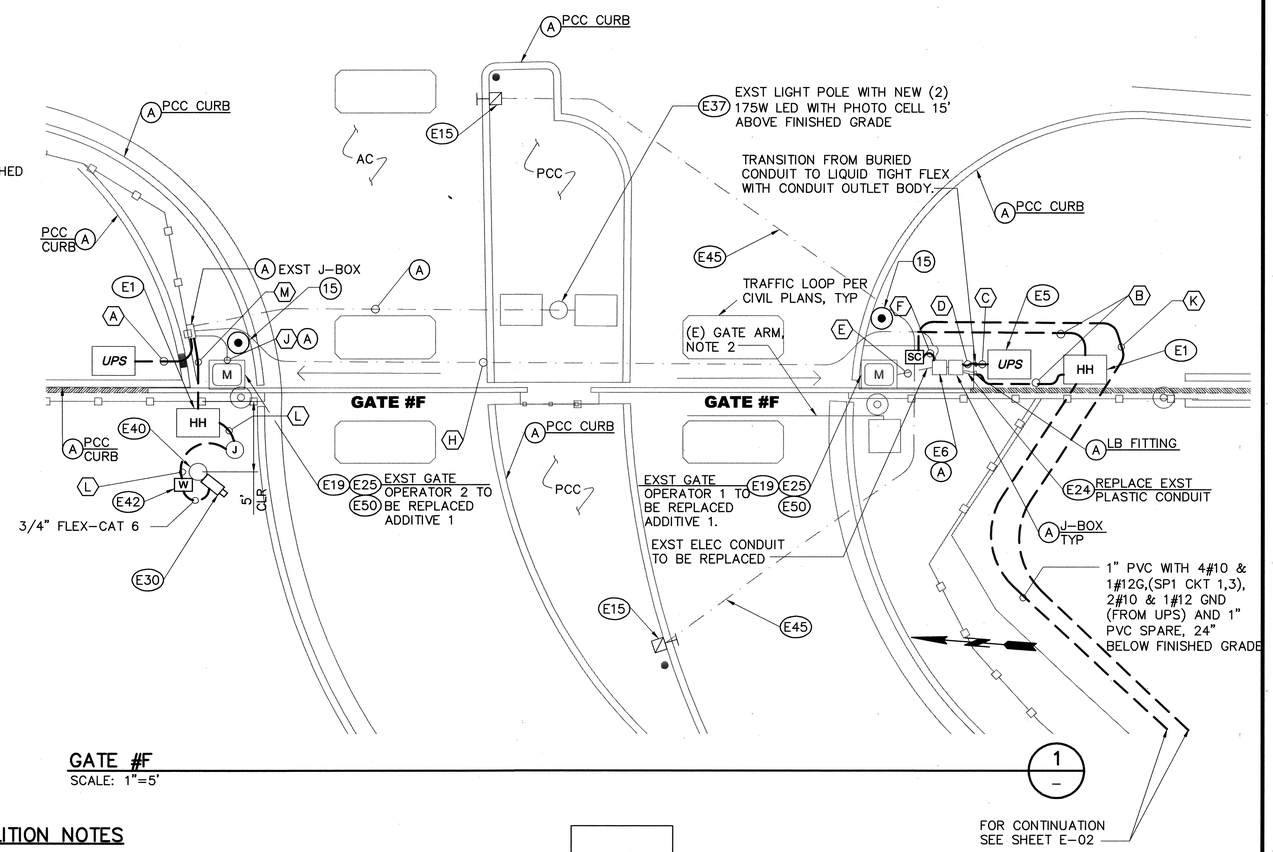

GATE #F
SCALE: 1"=5'

PERIMETER RACEWAY SCHEDULE						
	NO	DUCT TYPE	DUCT DEPTH	DUCT SIZE	CONDUCTORS	CIRCUIT
(A)	1	PVC/GRS	24"	1"	2 #10 AWG, 600V, THHN; 1/C #12 AWG-G	SP1 CKT 1
					2 #10 AWG, 600V, THHN	UPS TO GATE OPERATOR 2 VIA J-BOX
(B)	1	PVC/GRS	24"	1"	2 #10 AWG, 600V, THHN; 1/C #12 AWG-G	SP1 CKT 1 (TO GATE OPERATOR 1&2 UPS)
(C)	1	PVC/GRS	24"	1"	2 #10 AWG, 600V, THHN; 1/C #12 AWG-G	SP1 CKT 1 (TO GATE OPERATOR 1 UPS)
(D)	1	GRS	AG	1"	2 #10 AWG, 600V, THHN; 1/C #12 AWG-G	UPS TO GATE OPERATOR 1 VIA J-BOX
(E)	1	GRS	AG	1"	2 #10 AWG, 600V, THHN; 1/C #12 AWG-G	UPS TO GATE OPERATOR 1
(F)	1	GRS	AG	1"	2 #10 AWG, 600V, THHN; 1/C #12 AWG-G	UPS TO GATE F SECURITY
(H)	1	EXST	EXST	EXST	4 #10 AWG, 600V, THHN; 1/C #12 AWG-G	SP1 CKT 1,3
(I)	2	PVC	24"	1"	CAT 6 CABLE	SECURITY CABINET TO FIELD DEVICES PLUS SPARE CONDUIT
(J)	1	PVC/GRS	24"	1"	2 #10 AWG, 600V, THHN; 1/C #12 AWG-G	UPS TO GATE OPERATOR 2
(K)	2	PVC	24"	1"	2 CAT 6 CABLE	WIRELESS NODE NEAR EXIST TRASH BIN
(L)	1	PVC/GRS	24"	1"	2 #10 AWG, 600V, THHN; 1/C #12 AWG-G	SP1 CKT 3 (WIRELESS NODE)
(M)	1	PVC	24"	1"	2 #10 AWG, 600V, THHN; 1/C #12 AWG-G	SP1 CKT 3 (WIRELESS NODE AND CAMERA)

DEMOLITION NOTES

(D2) REMOVE EXISTING CONDUIT AND REPLACE.

CONSTRUCTION NOTES

(15) INSTALL BOLLARD PER CITY OF TORRANCE DRAWING T-501.

ADDITIVE (1) NOTES

(E19) EXISTING GATE OPERATOR TO BE REMOVED AND TURN OVER TO THE OWNER REPRESENTATIVE.

(E25) EXISTING WIRING TO BE PROTECTED IN PLACE FOR RECONNECTION TO NEW MOTOR GATE OPERATOR.

(E50) REMOVE AND REPLACE EXISTING GATE OPERATOR WITH NEW HYDRAULIC GATE OPERATOR.

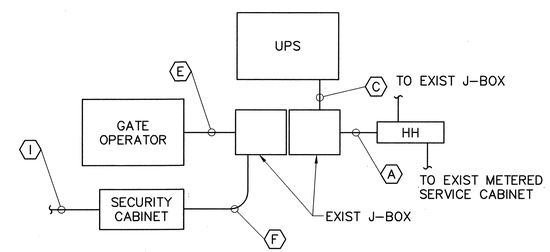

UPS INSTALLATION AT GATE #F
SCALE: NOT TO SCALE

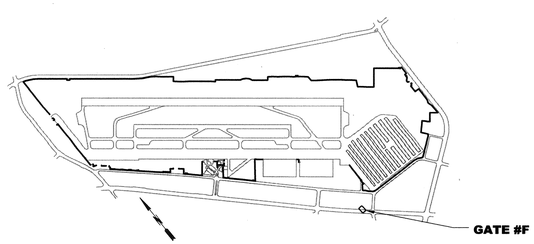

KEY MAP

SCALE: 1" = 5'
0 5' 10' 15'

REGISTERED PROFESSIONAL ENGINEER BENJAMIN A. MASCARENAS ELECTRICAL STATE OF CALIFORNIA EXP. 9-30-14 10/02/13

PLANS PREPARED BY:

AECOM

999 Town & Country Road
Orange, CA 92868
Phone: 714.567.2501
Fax: 714.567.2441
www.aecom.com

REV	DATE	DESCRIPTION	BY	CHECKED

CITY OF TORRANCE
PUBLIC WORKS DEPARTMENT
ZAMPERINI FIELD SECURITY PROJECT, FEAP 616
ELECTRICAL PLAN AT GATE F

DRAWN: PS
DESIGNED: TB
PROJECT ENGINEER: D. YOUNG

APPROVED: 10/10/13
CRAIG S. BILEZERIAN DATE
CITY ENGINEER
R.C.E. NO. 55339 EXP. 12/31/14

SCALE: 1"=20' SHEET 21 OF 42 E-02A
PLAN NO. **AP-177**

10/02/13 16:05 P:\60288818 Zamperini Field\DOL_CAD\DOL_Civil\Sheets\E-02A.dwg

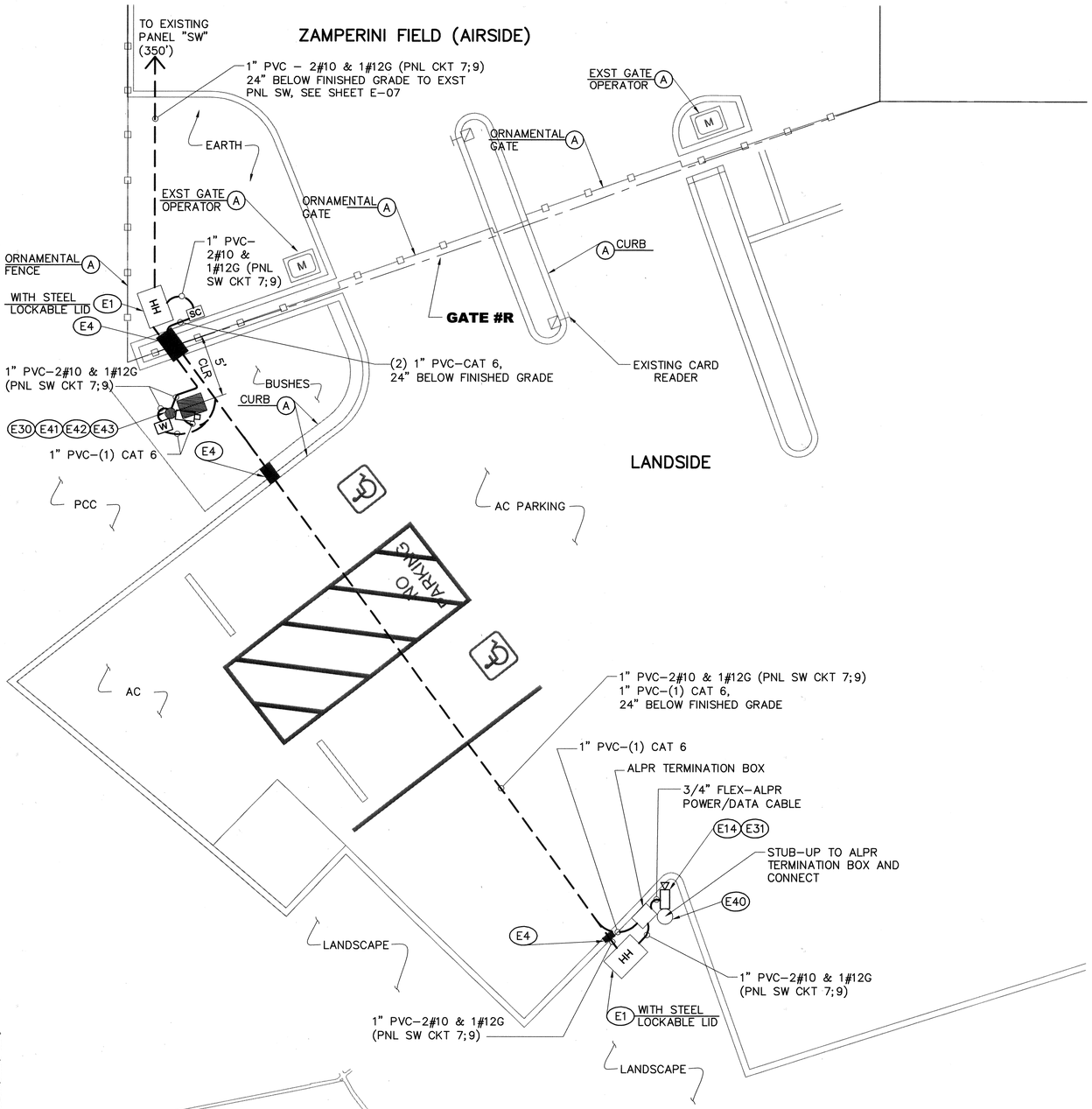

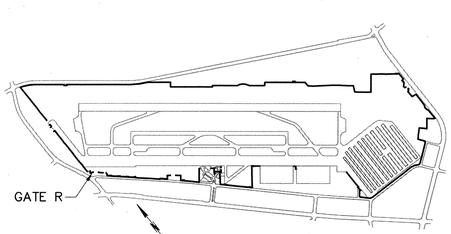

KEY MAP

DISPOSITION NOTES

(A) PROTECT IN PLACE.

ELECTRICAL NOTES

(E1) INSTALL PRECAST HANDHOLE PER DETAIL 1 ON SHEET E-D3.

(E4) HORIZONTAL BORE 4" CONDUIT BENEATH PAVEMENT.

(E14) INSTALL ALPR CAMERA (12' ABOVE FINISH GRADE) & TERMINATION BOX ON POLE.

(E30) INSTALL SECURITY CAMERA ON POLE (12' ABOVE FINISHED GRADE). UNLESS NOTED OTHERWISE.

(E31) CONNECT NEW WIRES TO ALPR TERMINATION BOX NO SPLICES.

(E40) CONSTRUCT SECURITY POLE & FOUNDATION PER DETAIL 1 ON SHEET SE-02.

(E41) CONSTRUCT 20' POLE & FOUNDATION PER DETAIL 2 ON SHEET E-D6.

(E42) INSTALL WIRELESS NODE ON POLE, UNLESS NOTED OTHERWISE.

(E43) INSTALL 175W LED FIXTURE 15' MIN ABOVE FINISH GRADE ON HANGAR BUILDING.

GENERAL NOTE:

LOCATION OF ALPR IS APPROXIMATE & MUST BE COORDINATED WITH PIPS TECHNOLOGY.

LEGEND

EXISTING	NEW	
M		GATE OPERATOR
	HH	HANDHOLE "HH" OR PULL BOX "PB"
		BURIED ELECTRICAL CONDUIT, 24" BELOW FINISH
		HORIZONTAL BORING
		SAWCUT
	W	WIRELESS NODE

SCALE: 1" = 5'

0 5' 10' 15'

REV	DATE	DESCRIPTION	BY	CHECKED

PLANS PREPARED BY:

AECOM

999 Town & Country Road
Orange, CA 92868
Phone: 714.567.2501
Fax: 714.567.2441
www.aecom.com

REGISTERED PROFESSIONAL ENGINEER BENJAMIN A. MASCARENAS C61301 EXP. 9-30-14 ELECTRICAL STATE OF CALIFORNIA

10/02/13

CITY OF TORRANCE
PUBLIC WORKS DEPARTMENT
ZAMPERINI FIELD SECURITY PROJECT, FEAP 616
ELECTRICAL PLAN AT GATE R

DRAWN: PS

DESIGNED: TB

PROJECT ENGINEER: D. YOUNG

APPROVED: 10/10/13
CRAIG S. BILEZERIAN
CITY ENGINEER
R.C.E. NO. 55339
DATE
EXP. 12/31/14

SCALE: 1"=20'

SHEET 22 OF 42

E-03

PLAN NO. **AP-177**

10/02/13 16:05 P:\60288818 Zamperini Field\000_CAD\006_Civil\Sheets\E-03.dwg

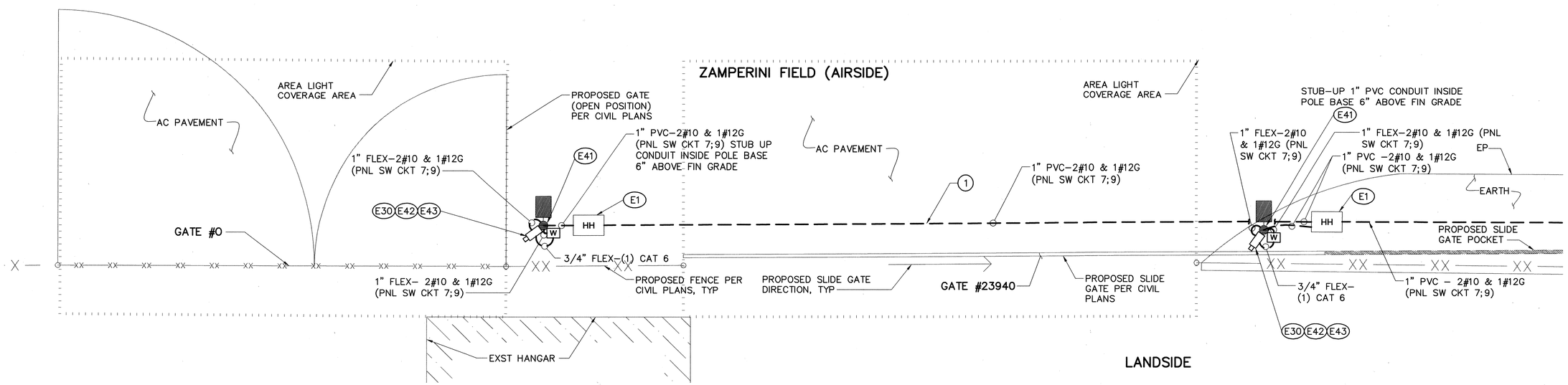

GATE #0 AND GATE #23940

SCALE: 1"=5'

1
–

DISPOSITION NOTES

(A) PROTECT IN PLACE.

ELECTRICAL NOTES

(E1) INSTALL PRECAST HANDHOLE PER DETAIL 1 ON SHEET E–D3.

(E30) INSTALL SECURITY CAMERA ON POLE (12' ABOVE FINISHED GRADE). UNLESS NOTED OTHERWISE.

(E41) CONSTRUCT 20' POLE & FOUNDATION PER DETAIL 2 ON SHEET E–D6.

(E42) INSTALL WIRELESS NODE ON POLE, UNLESS NOTED OTHERWISE.

(E43) INSTALL 175W LED FIXTURE 15' MIN ABOVE FINISH GRADE ON HANGAR BUILDING.

CONSTRUCTION NOTES

(1) SAWCUT AND REMOVE EXISTING AC PAVEMENT.

LEGEND

EXISTING	NEW	
	HH	HANDHOLE "HH" OR PULL BOX "PB"
		POLE MOUNTED AREA LIGHT, 175W LED
	SC	SECURITY CABINET
		AREA LIGHT TARGET COVERAGE AREA
		BURIED ELECTRICAL CONDUIT, 24" BELOW FINISHED
		SAWCUT
		SECURITY CAMERA, SEE "E" AND "SE" SHEETS

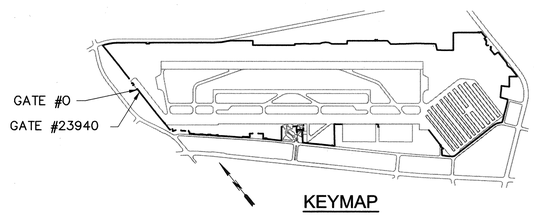

KEYMAP

SCALE: 1" = 5'

0 5' 10' 15'

REGISTERED PROFESSIONAL ENGINEER BENJAMIN A. MOSCARDINI No. E 51130 Exp. 9-30-14 ELECTRICAL STATE OF CALIFORNIA

10/02/13

PLANS PREPARED BY:

AECOM

999 Town & Country Road
Orange, CA 92868
Phone: 714.567.2501
Fax: 714.567.2441
www.aecom.com

REV	DATE	DESCRIPTION	BY	CHECKED

CITY OF TORRANCE
PUBLIC WORKS DEPARTMENT
ZAMPERINI FIELD SECURITY PROJECT, FEAP 616
ELECTRICAL PLAN FOR GATES O AND 23940

DRAWN: PS
APPROVED: 10/10/13
DESIGNED: PS
CRAIG S. BILEZERIAN DATE
CITY ENGINEER
R.C.E. NO. 55339 EXP. 12/31/14
PROJECT ENGINEER: D. YOUNG
SCALE: 1"=5'
SHEET 23 OF 42
E-04
PLAN NO. **AP-177**

10/02/13 16:05 P:\60328618 Zamperini Field\DGL_CAD\DGN_Civil\Sheets\E-04.dwg

DISPOSITION NOTES

(A) PROTECT IN PLACE.

ELECTRICAL NOTES

(E1) INSTALL PRECAST HANDHOLE PER DETAIL 1 ON SHEET E-D3.

(E30) INSTALL SECURITY CAMERA ON POLE (12' ABOVE FINISHED GRADE). UNLESS NOTED OTHERWISE.

(E32) CUT EXISTING CONDUIT, INSTALL HANDHOLE AND EXTEND TO HANDHOLE.

(E41) CONSTRUCT 20' POLE & FOUNDATION PER DETAIL 2 ON SHEET E-D6.

(E42) INSTALL WIRELESS NODE ON POLE, UNLESS NOTED OTHERWISE.

(E43) INSTALL 175W LED FIXTURE 15' MIN ABOVE FINISH GRADE ON HANGAR BUILDING.

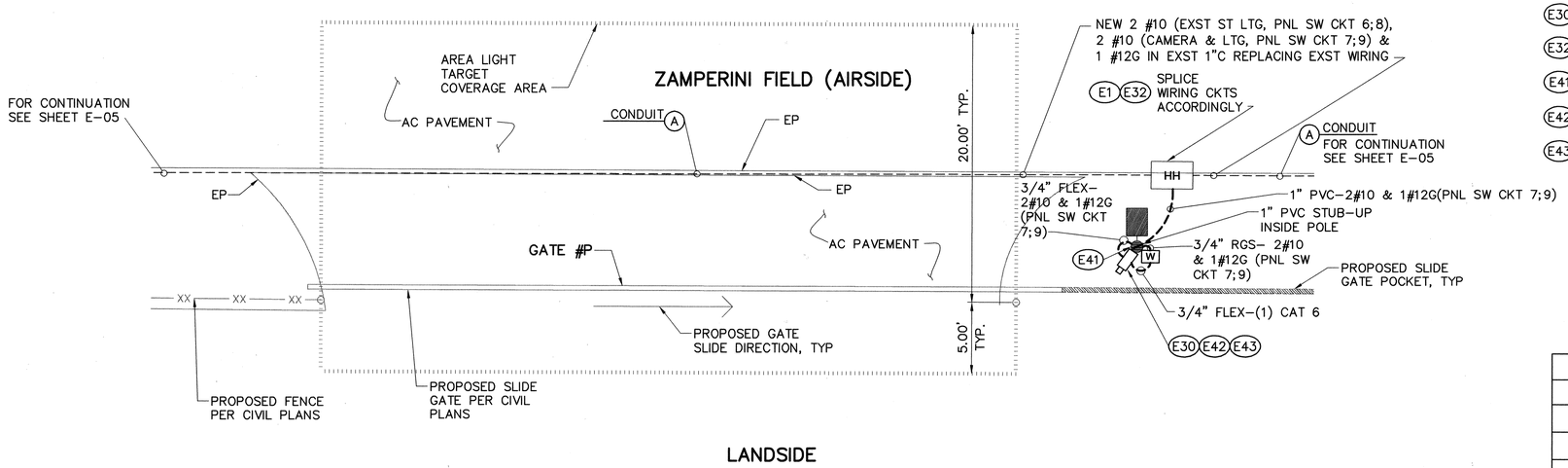

GATE #P

SCALE: 1"=5'

1

-

LEGEND		
EXISTING	NEW	
	HH	HANDHOLE "HH" OR PULL BOX "PB"
		POLE MOUNTED AREA LIGHT, 175W LED
	SC	SECURITY CABINET
		AREA LIGHT TARGET COVERAGE AREA
— — — —		BURIED ELECTRICAL CONDUIT, 24" BELOW FINISHED GRADE
	W	WIRELESS NODE

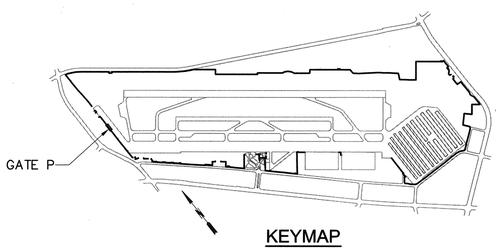

KEYMAP

SCALE: 1" = 5'

0 5' 10' 15'

REGISTERED PROFESSIONAL ENGINEER ALBERT A. MASCORRO No. 15130 Exp. 9-30-14 ELECTRICAL STATE OF CALIFORNIA 10/01/13

PLANS PREPARED BY:

AECOM

999 Town & Country Road
Orange, CA 92868
Phone: 714.567.2501
Fax: 714.567.2441
www.aecom.com

REV	DATE	DESCRIPTION	BY	CHECKED

CITY OF TORRANCE
PUBLIC WORKS DEPARTMENT

ZAMPERINI FIELD SECURITY PROJECT, FEAP 616

ELECTRICAL PLAN FOR GATE P

DRAWN: PS

APPROVED: S Bilezerian 10/10/13

DESIGNED: TB

CRAIG S. BILEZERIAN
CITY ENGINEER
R.C.E. NO. 55339
DATE
EXP. 12/31/14

PROJECT ENGINEER: D. YOUNG

SCALE: 1"=60'

SHEET 24 OF 42

E-05

PLAN NO. **AP-177**

10/02/13 16:05 P:\60289818 Zamperini Field\000_CAD\006_Civil\Sheets\E-05.dwg

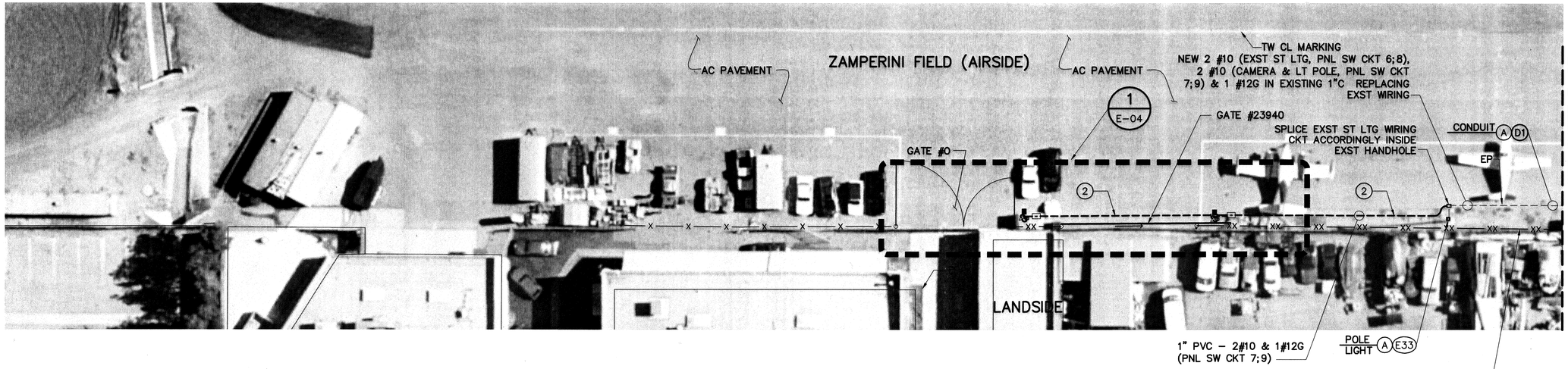

DISPOSITION NOTES

(A) PROTECT IN PLACE.

DEMOLITION NOTES

(D1) REMOVE EXISTING WIRING AND REPLACE.

ELECTRICAL NOTES

(E33) SPLICE EXISTING LIGHTING FIXTURE WIRES TO NEW 2#10 & 1#12 GND.

CONSTRUCTION NOTES

(2) RESTORE EXISTING PAVEMENT MARKINGS, MATCH IN KIND.

LEGEND		
EXISTING	NEW	
	HH	HANDHOLE "HH" OR PULL BOX "PB"
		POLE MOUNTED AREA LIGHT, 175W LED
	SC	SECURITY CABINET
— — — —	- - - - - - -	BURIED ELECTRICAL CONDUIT, 24" BELOW FINISHED GRADE
	— - - —	SAWCUT

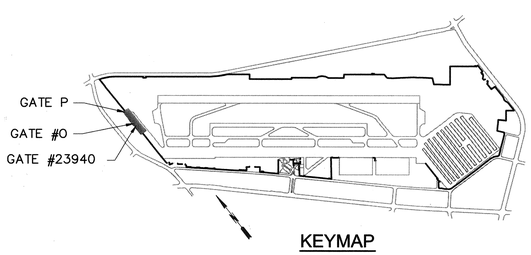

KEYMAP

SCALE: 1" = 20'

0 20' 40' 60'

REGISTERED PROFESSIONAL ENGINEER WILLIAM A. MACDONALD No. E130 Exp. 9-30-14 ELECTRICAL STATE OF CALIFORNIA 10/02/13

PLANS PREPARED BY:

AECOM

999 Town & Country Road
Orange, CA 92868
Phone: 714.567.2501
Fax: 714.567.2441
www.aecom.com

REV	DATE	DESCRIPTION	BY	CHECKED

CITY OF TORRANCE
PUBLIC WORKS DEPARTMENT
ZAMPERINI FIELD SECURITY PROJECT, FEAP 616
ELECTRICAL PLAN ALONG MADISON 1 OF 2

DRAWN: PS
APPROVED: S. Bilezerian 10/10/13
DESIGNED: TB
CRAIG S. BILEZERIAN
CITY ENGINEER
R.C.E. NO. 55339
DATE
EXP. 12/31/14
PROJECT ENGINEER: D. YOUNG
SCALE: 1"=20'
SHEET 25 OF 42
E-06
PLAN NO. **AP-177**

10/02/13 16:05 P:\60288818 Zamperini Field\DGL_CAD\DWG_Civil\Sheets\E-06.dwg

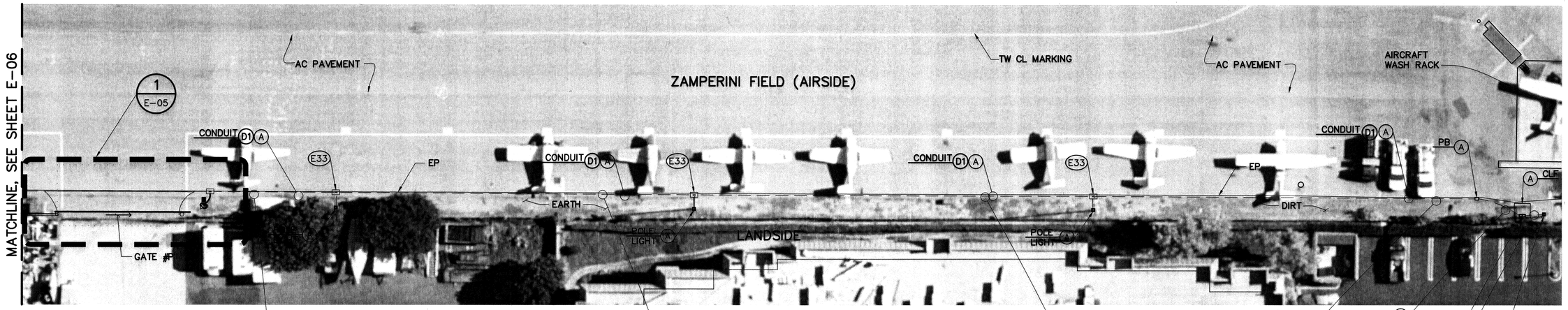

NEW 2 #10 (EXST ST LTG, PNL SW CKT 6;8), 2 #10 (CAMERA & LT POLE, PNL SW CKT 7;9) & 1 #12G IN EXISTING 1"C REPLACING EXST WIRING

NEW 2 #10 (EXST ST LTG, PNL SW CKT 6;8), 2 #10 (CAMERA & LT POLE, PNL SW CKT 7;9) & 1 #12G IN EXISTING 1"C REPLACING EXST WIRING

NEW 2 #10 (EXST ST LTG, PNL SW CKT 6;8), 2 #10 (CAMERA & LT POLE, PNL SW CKT 7;9) & 1 #12G IN EXISTING 1"C REPLACING EXST WIRING

D1
EXST PANEL SW E11 E32

NEW 2 #10 (EXST ST LTG, PNL SW CKT 6;8) IN EXST 1"C REPLACING EXST WIRES

POLE LIGHT A E33

DISPOSITION NOTES

(A) PROTECT IN PLACE.

DEMOLITION NOTES

(D1) REMOVE EXISTING WIRING AND REPLACE.

ELECTRICAL NOTES

(E11) INSTALL (2) 2P, 20A CIRCUIT BREAKER IN EXISTING PANEL SW FOR SURVEILLANCE CAMERA POWER. CIRCUIT BREAKER AIC RATING TO MATCH EXISTING.

(E32) CUT EXISTING CONDUIT, INSTALL HANDHOLE AND EXTEND TO HANDHOLE.

(E33) SPLICE EXISTING LIGHTING FIXTURE WIRES TO NEW 2#10 & 1#12

LEGEND	
EXISTING	NEW
—— ——	— — — —

BURIED ELECTRICAL CONDUIT, 24" BELOW FINISHED

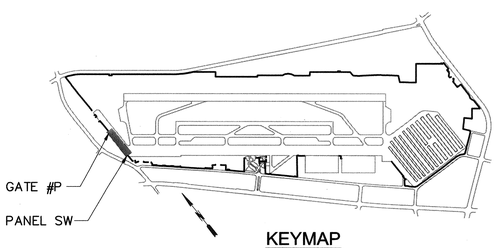

KEYMAP

SCALE: 1" = 20'

0 20' 40' 60'

REGISTERED PROFESSIONAL ENGINEER BENJAMIN A. MACDONALD No. 6130 Exp. 9-30-14 ELECTRICAL STATE OF CALIFORNIA 10/02/13

PLANS PREPARED BY:

AECOM

999 Town & Country Road
Orange, CA 92868
Phone: 714.567.2501
Fax: 714.567.2441
www.aecom.com

REV	DATE	DESCRIPTION	BY	CHECKED

CITY OF TORRANCE
PUBLIC WORKS DEPARTMENT
ZAMPERINI FIELD SECURITY PROJECT, FEAP 616
ELECTRICAL PLAN ALONG MADISON 2 OF 2

DRAWN: PS
APPROVED: 10/10/13
DESIGNED: TB
CRAIG S. BILEZERIAN CITY ENGINEER R.C.E. NO. 55339 DATE EXP. 12/31/14
PROJECT ENGINEER: D. YOUNG
SCALE: 1"=20'
SHEET 26 OF 42
E-07
PLAN NO. **AP-177**

10/02/13 16:06 P:\60288818 Zamperini Field\000_CAD\006_Civil\Sheets\E-07.dwg

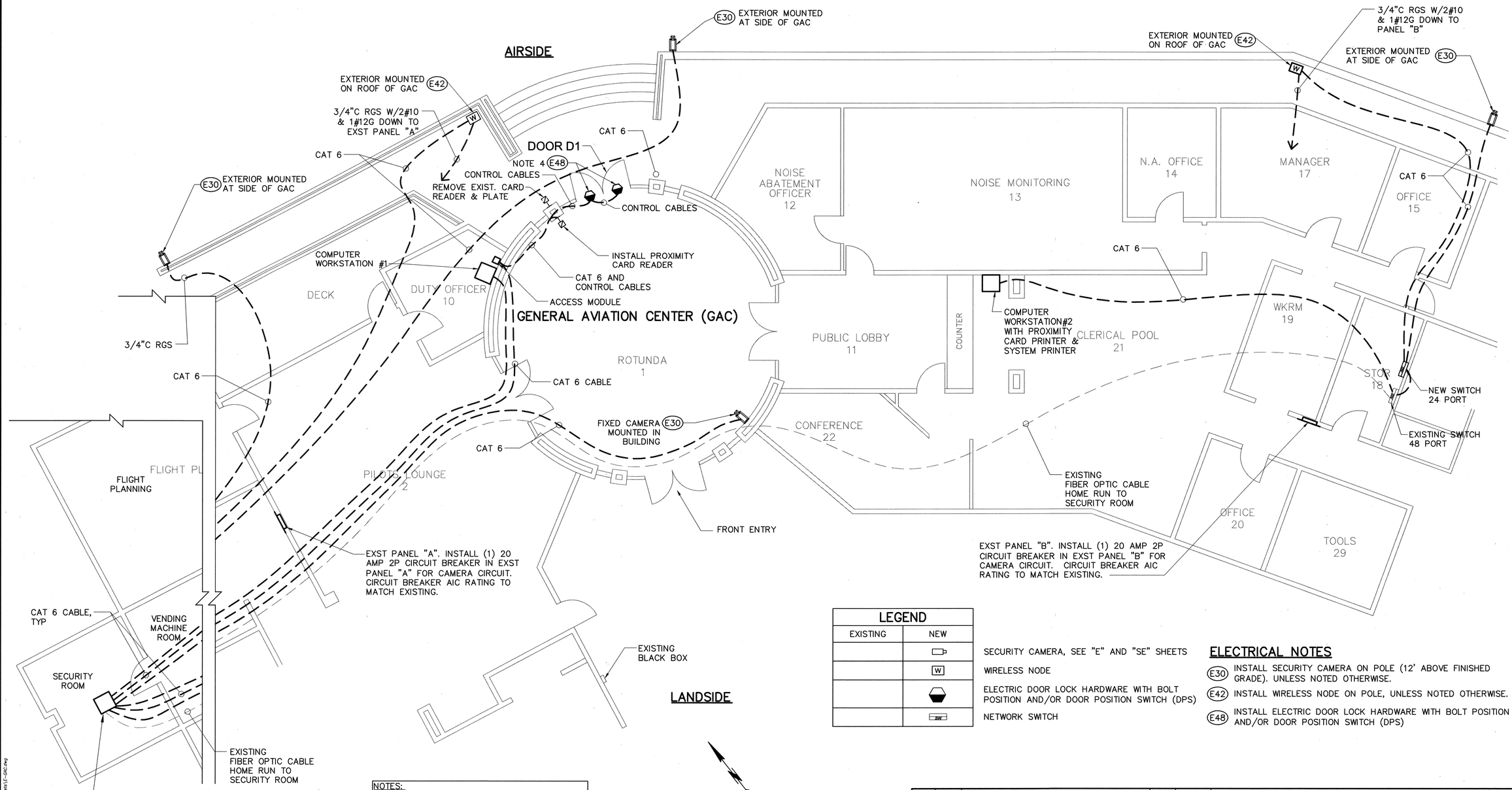

LEGEND

EXISTING	NEW	
		SECURITY CAMERA, SEE "E" AND "SE" SHEETS
	W	WIRELESS NODE
		ELECTRIC DOOR LOCK HARDWARE WITH BOLT POSITION AND/OR DOOR POSITION SWITCH (DPS)
	SW	NETWORK SWITCH

ELECTRICAL NOTES

- E30 INSTALL SECURITY CAMERA ON POLE (12' ABOVE FINISHED GRADE). UNLESS NOTED OTHERWISE.
- E42 INSTALL WIRELESS NODE ON POLE, UNLESS NOTED OTHERWISE.
- E48 INSTALL ELECTRIC DOOR LOCK HARDWARE WITH BOLT POSITION AND/OR DOOR POSITION SWITCH (DPS)

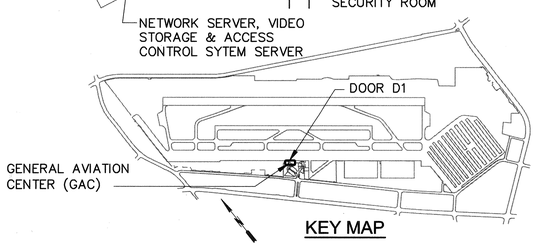

KEY MAP

NOTES:

1. CONTRACTOR SHALL SURVEY AREA PANELS FOR SUITABLE LOCATION FOR ADDITIONAL RECEPTACLE CIRCUITS.
2. RECEPTACLE CIRCUITS ARE NOT NUMBERED.
3. EXACT ROUTING THROUGH EXISTING BUILDING CEILING/PLENUM SHALL BE MADE IN THE FIELD.
4. DOOR D1 SHALL BE EQUIPPED MECHANICAL DOOR HANDLE TO BY-PASS ELECTRICAL DOOR LOCKING SYSTEM FOR FREE EGRESS FROM AIRSIDE.
5. THE CONTRACTOR SHALL COORDINATE WITH THE CITY TO JOINTLY SURVEY AND AGREE ON THE PROPOSED CABLE PATHWAYS PRIOR TO BEGINNING WORK.

REGISTERED PROFESSIONAL ENGINEER BENJAMIN A. MASCORRO No. 6130 Exp. 9-30-14 ELECTRICAL STATE OF CALIFORNIA
10/02/13

PLANS PREPARED BY:

AECOM

999 Town & Country Road
Orange, CA 92868
Phone: 714.567.2501
Fax: 714.567.2441
www.aecom.com

REV	DATE	DESCRIPTION	BY	CHECKED

CITY OF TORRANCE
PUBLIC WORKS DEPARTMENT
ZAMPERINI FIELD SECURITY PROJECT, FEAP 616
ELECTRICAL PLAN FOR GAC

DRAWN: BJ
DESIGNED: TB
PROJECT ENGINEER: D. YOUNG

APPROVED: 10/10/13
CRAIG S. BILEZERIAN DATE
CITY ENGINEER
R.C.E. NO. 55339 EXP. 12/31/14

SCALE: 1"=5' SHEET 27 OF 42 E-GAC
PLAN NO. **AP-177**

10/02/13 15:51 P:\60288818 Zamperini Field\000_CAD\005_Civil\Sheets\E-GAC.dwg

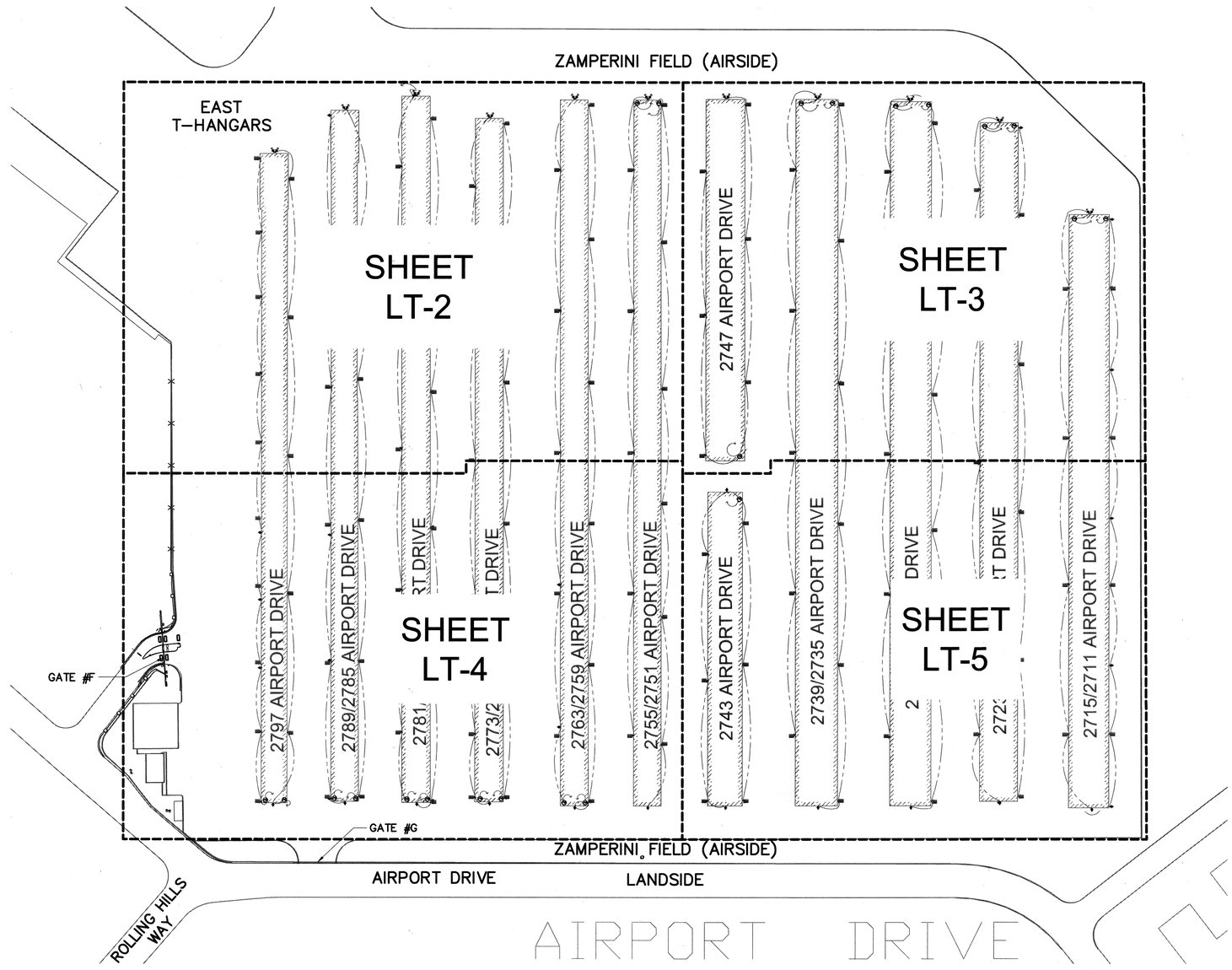

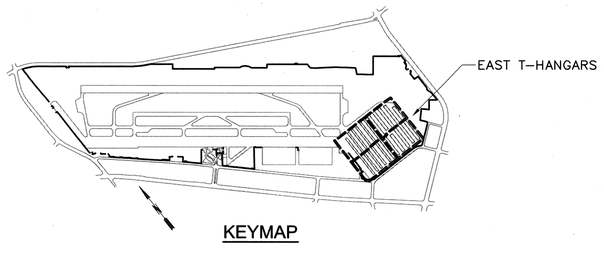

SCALE: 1" = 80'

0 80' 160' 240'

PLANS PREPARED BY:

AECOM

999 Town & Country Road
Orange, CA 92868
Phone: 714.567.2501
Fax: 714.567.2441
www.aecom.com

REV	DATE	DESCRIPTION	BY	CHECKED

CITY OF TORRANCE
PUBLIC WORKS DEPARTMENT

ZAMPERINI FIELD SECURITY PROJECT, FEAP 616

EAST T-HANGAR OVERALL

DRAWN: PS	APPROVED: 10/10/13		
DESIGNED: TB	CRAIG S. BILEZERIAN CITY ENGINEER R.C.E. NO. 55339	DATE EXP. 12/31/14	
PROJECT ENGINEER: D. YOUNG	SCALE: 1"=80'	SHEET 28 OF 42	LT-1
	PLAN NO.	AP-177	

10/02/13 16:06 P:\60288818 Zamperini Field\000L_CAD\006L_Dwf\Sheets\LT-1.dwg

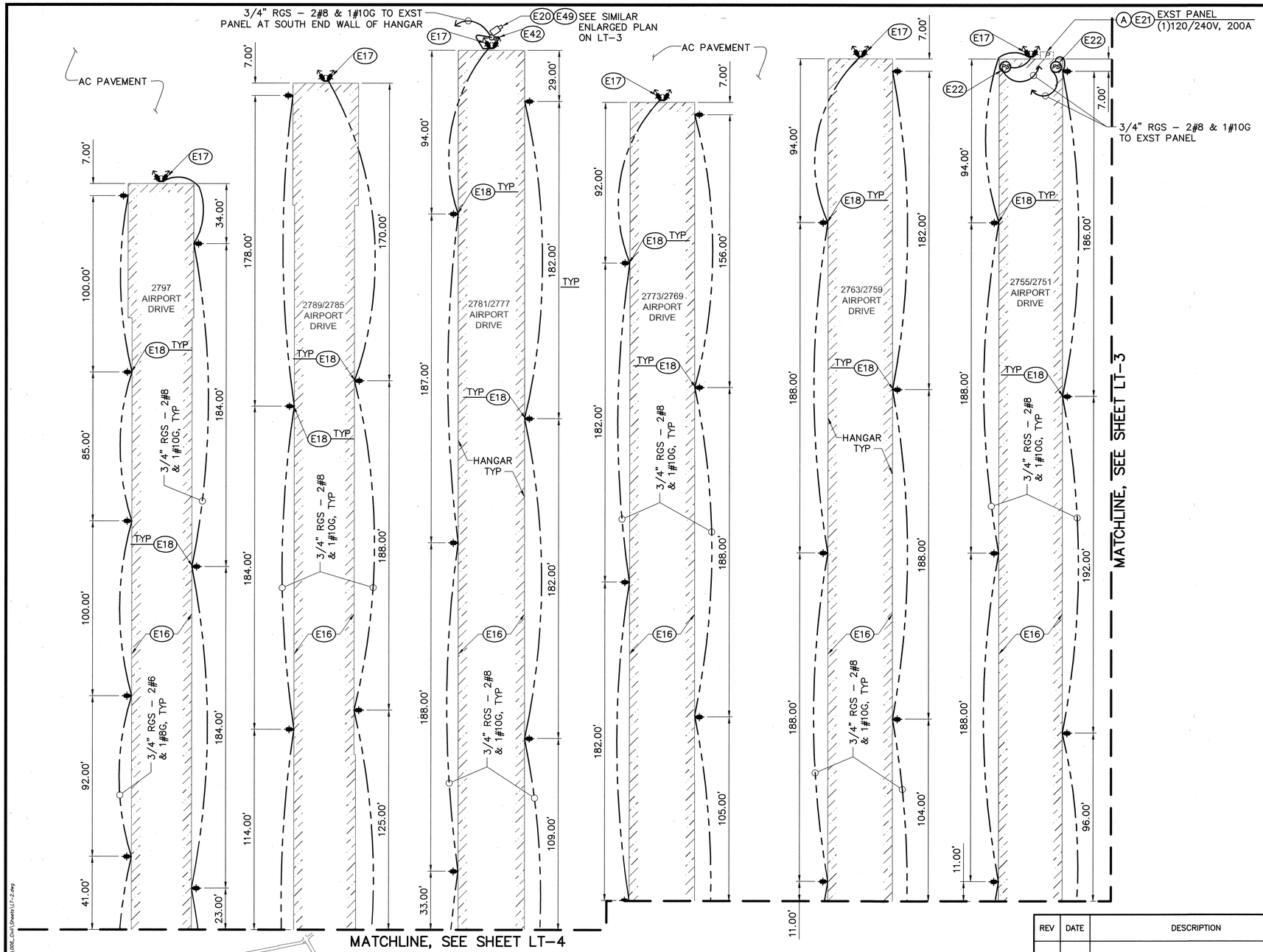

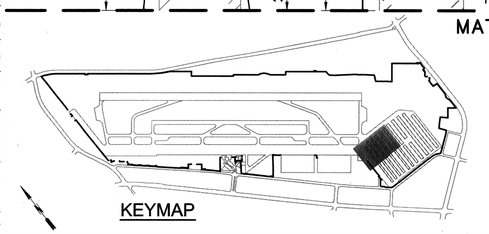

LEGEND		
EXISTING	NEW	
		(2) 175W LED AREA LUMINAIRE, TWIN
		175W LED AREA LUMINAIRE, SINGLE
		HOMERUN TO EXST 240V/120V PANEL
	PS	PHOTOCELL
P		POWER PANEL
		SECURITY CAMERA, SEE "E" AND "SE" SHEETS
		HANGAR
		EXPOSED ELECTRICAL CONDUIT (FACIA OR WALL MOUNT)
	W	WIRELESS NODE

DISPOSITION NOTES

(A) PROTECT IN PLACE.

ELECTRICAL NOTES

(E16) INSTALL FASCIA CHANNEL BAR FOR CONDUIT MOUNTING PER DETAIL 4 SHEET E–D5.

(E17) INSTALL (2) 175 W LED AREA LUMINAIRE, TWIN PER DETAIL 2 ON SHEET E–D5.

(E18) INSTALL 175 W LED AREA LUMINARE SINGLE ON ELL PIPE BRACKET PER DETAIL 1 ON SHEET E–D5.

(E20) INSTALL (1) 20A, 2P CIRCUIT BREAKER IN EXISTING PANEL CIRCUIT BREAKER SPACE. CIRCUIT BREAKER AIC RATING TO MATCH EXISTING.

(E21) INSTALL (2) 20A, 2P CIRCUIT BREAKER IN EXISTING PANEL CIRCUIT BREAKER SPACE. CIRCUIT BREAKER AIC RATING TO MATCH EXISTING.

(E22) INSTALL PHOTOCELL ON HANGAR BUILDING PER DETAIL 1 ON SHEET E–D4.

(E42) INSTALL WIRELESS NODE ON POLE, UNLESS NOTED OTHERWISE.

(E49) INSTALL SECURITY CAMERA ON BUILDING, PER DETAIL 3 ON SHEET SE–02.

SCALE: 1" = 30'

0 30' 60' 90'

REV	DATE	DESCRIPTION	BY	CHECKED

REGISTERED PROFESSIONAL ENGINEER BENJAMIN A. MASCHKE C 61130 EXP. 9-30-14 ELECTRICAL STATE OF CALIFORNIA 10/09/13

PLANS PREPARED BY:

AECOM

999 Town & Country Road
Orange, CA 92868
Phone: 714.567.2501
Fax: 714.567.2441
www.aecom.com

CITY OF TORRANCE
PUBLIC WORKS DEPARTMENT
ZAMPERINI FIELD SECURITY PROJECT, FEAP 616
EAST T-HANGAR LIGHTING PLAN (1 OF 4)

DRAWN: PS
DESIGNED: TB
PROJECT ENGINEER: D. YOUNG

APPROVED: 10/10/13
CRAIG S. BILEZERIAN DATE
CITY ENGINEER
R.C.E. NO. 55339 EXP. 12/31/14

SCALE: 1"=30' SHEET 29 OF 42 LT-2
PLAN NO. **AP-177**

10/02/13 16:08 P:\60398616 Zamperini Field\000_CAD\000_Civil\Sheets\LT-2.dwg

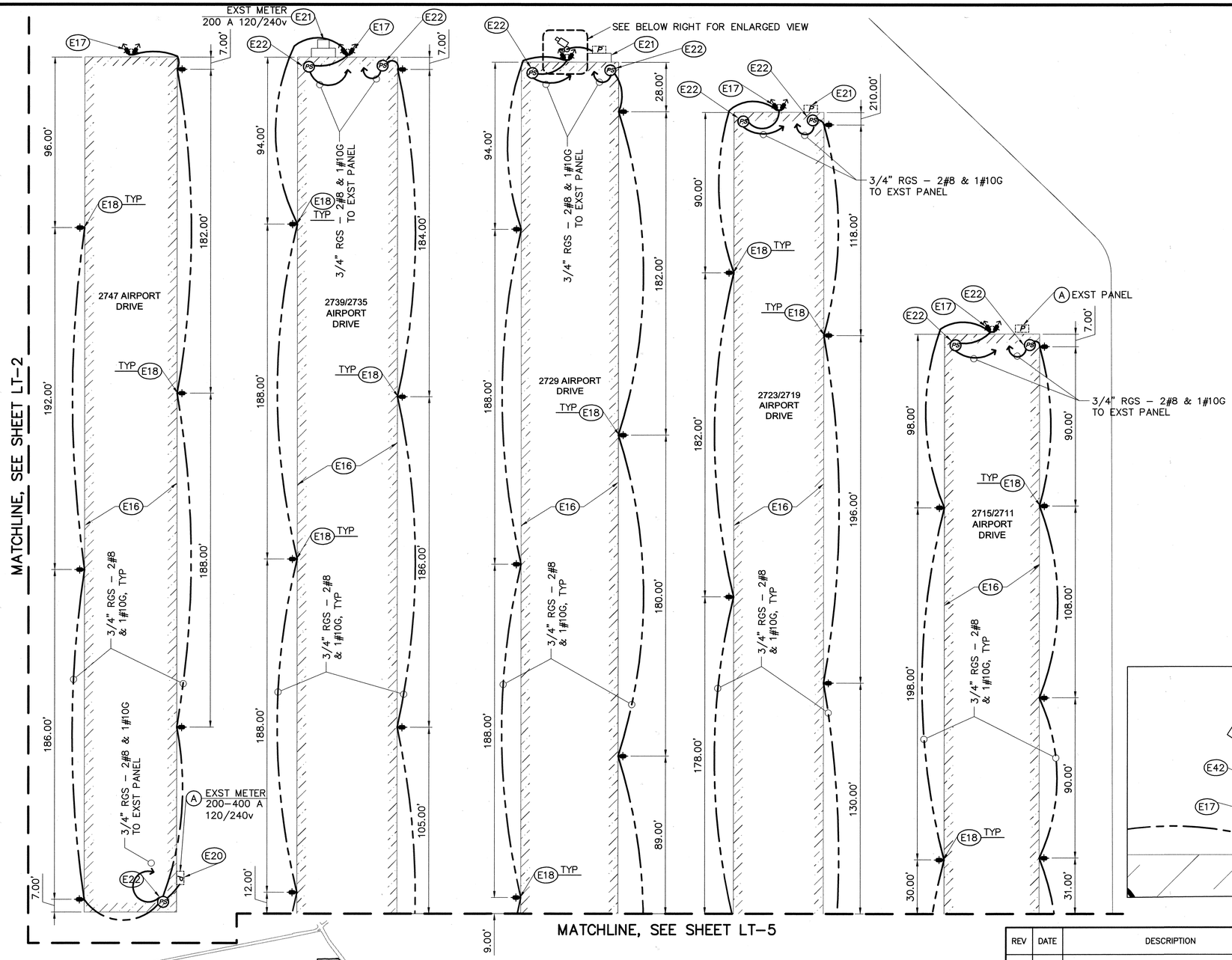

DISPOSITION NOTES

(A) PROTECT IN PLACE.

ELECTRICAL NOTES

(E16) INSTALL FASCIA CHANNEL BAR FOR CONDUIT MOUNTING PER DETAIL 4 SHEET E-D5.

(E17) INSTALL (2) 175 W LED AREA LUMINAIRE, TWIN PER DETAIL 2 ON SHEET E-D5.

(E18) INSTALL 175 W LED AREA LUMINARE SINGLE ON ELL PIPE BRACKET PER DETAIL 1 ON SHEET E-D5.

(E20) INSTALL (1) 20A, 2P CIRCUIT BREAKER IN EXISTING PANEL CIRCUIT BREAKER SPACE. CIRCUIT BREAKER AIC RATING TO MATCH EXISTING.

(E21) INSTALL (2) 20A, 2P CIRCUIT BREAKER IN EXISTING PANEL CIRCUIT BREAKER SPACE. CIRCUIT BREAKER AIC RATING TO MATCH EXISTING.

(E22) INSTALL PHOTOCELL ON HANGAR BUILDING PER DETAIL 1 ON SHEET E-D4.

(E42) INSTALL WIRELESS NODE ON POLE, UNLESS NOTED OTHERWISE.

(E49) INSTALL SECURITY CAMERA ON BUILDING, PER DETAIL 3 ON SHEET SE-02.

LEGEND

EXISTING	NEW	
		(2) 175W LED AREA LUMINAIRE, TWIN
		175W LED AREA LUMINAIRE, SINGLE
		HOMERUN TO EXST 240V/120V PANEL
	PS	PHOTOCELL
		PANELBOARD
		SECURITY CAMERA, SEE "E" AND "SE" SHEETS
		HANGAR
		EXPOSED ELECTRICAL CONDUIT (FACIA OR WALL MOUNT)
	W	WIRELESS NODE

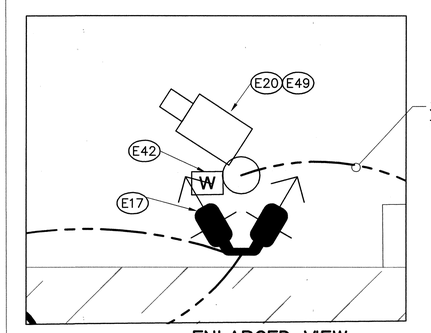

ENLARGED VIEW

SCALE: 1" = 30'

0 30' 60' 90'

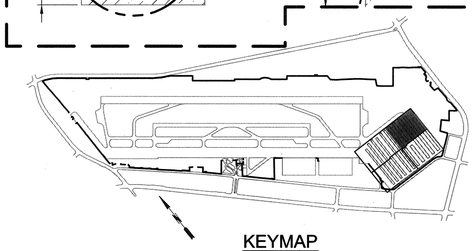

KEYMAP

REV	DATE	DESCRIPTION	BY	CHECKED

PLANS PREPARED BY:

AECOM

999 Town & Country Road
Orange, CA 92868
Phone: 714.567.2501
Fax: 714.567.2441
www.aecom.com

REGISTERED PROFESSIONAL ENGINEER BENJAMIN A. MASCARENHAS NO. 55130 EXP. 9-30-14 ELECTRICAL STATE OF CALIFORNIA 10/02/13

CITY OF TORRANCE
PUBLIC WORKS DEPARTMENT

ZAMPERINI FIELD SECURITY PROJECT, FEAP 616

EAST T-HANGAR LIGHTING PLAN (2 OF 4)

DRAWN: PS

DESIGNED: TB

PROJECT ENGINEER: D. YOUNG

APPROVED: 10/10/13

CRAIG S. BILEZERIAN
CITY ENGINEER
R.C.E. NO. 55339
DATE
EXP. 12/31/14

SCALE: 1"=30'

SHEET 30 OF 42

LT-3

PLAN NO. **AP-177**

10/02/13 16:08 P:\60288818 Zamperini Field\DSL_CAD\DSL_Civil\Sheets\LT-3.dwg

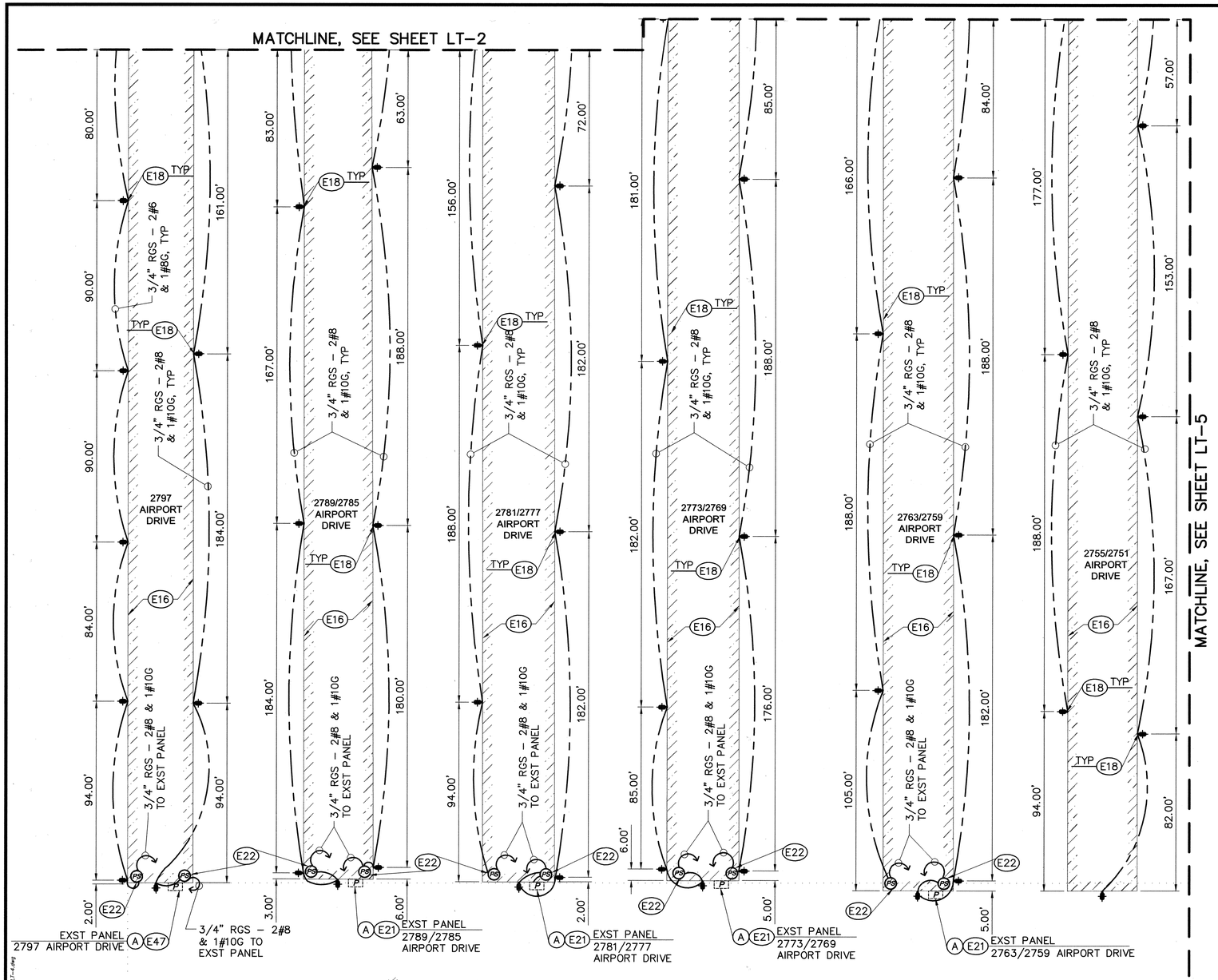

DISPOSITION NOTES

(A) PROTECT IN PLACE.

ELECTRICAL NOTES

(E16) INSTALL FASCIA CHANNEL BAR FOR CONDUIT MOUNTING PER DETAIL 4 SHEET E–D5.

(E18) INSTALL 175 W LED AREA LUMINARE SINGLE ON ELL PI BRACKET PER DETAIL 1 ON SHEET E–D5.

(E21) INSTALL (2) 20A, 2P CIRCUIT BREAKER IN EXISTING PANEL BREAKER SPACE. CIRCUIT BREAKER AIC RATING TO MATCH

(E22) INSTALL PHOTOCELL ON HANGAR BUILDING PER DETAIL 1 ON SHEET E–D4.

(E47) INSTALL (2) 20A, 2P TANDEM CIRCUIT BREAKERS IN PANEL 2 REMAINING SPACES. CIRCUIT BREAKERS AIC RATING TO MATCH EXISTING.

LEGEND

EXISTING	NEW	
		175W LED AREA LUMINAIRE, SINGLE
		HOMERUN TO EXST 240V/120V PANEL
	PS	PHOTOCELL
P		POWER PANEL
		HANGAR
		EXPOSED ELECTRICAL CONDUIT (FACIA OR WALL MOUNT)

N

SCALE: 1" = 30'

0 30' 60' 90'

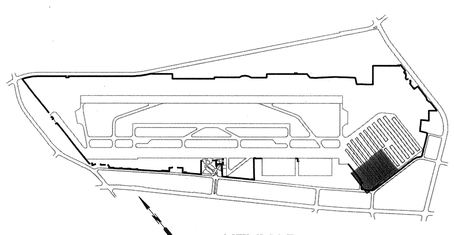

KEYMAP

REGISTERED PROFESSIONAL ENGINEER BENJAMIN A. MACGRAGOR NO. 6130 EXP. 9-30-14 ELECTRICAL STATE OF CALIFORNIA 10/02/13

PLANS PREPARED BY:

AECOM

999 Town & Country Road
Orange, CA 92868
Phone: 714.567.2501
Fax: 714.567.2441
www.aecom.com

REV	DATE	DESCRIPTION	BY	CHECKED

CITY OF TORRANCE
PUBLIC WORKS DEPARTMENT
ZAMPERINI FIELD SECURITY PROJECT, FEAP 616
EAST T-HANGAR LIGHTING PLAN (3 OF 4)

DRAWN: PS
DESIGNED: TB
PROJECT ENGINEER: D. YOUNG

APPROVED: 10/10/13
CRAIG S. BILEZERIAN
CITY ENGINEER
R.C.E. NO. 55339
DATE EXP. 12/31/14

SCALE: 1"=30'
SHEET 31 OF 42
LT-4
PLAN NO. **AP-177**

10/02/13 16:06 P:\60288618 Zamperini Field\000_CAD\006_Civil\Sheets\LT-4.dwg

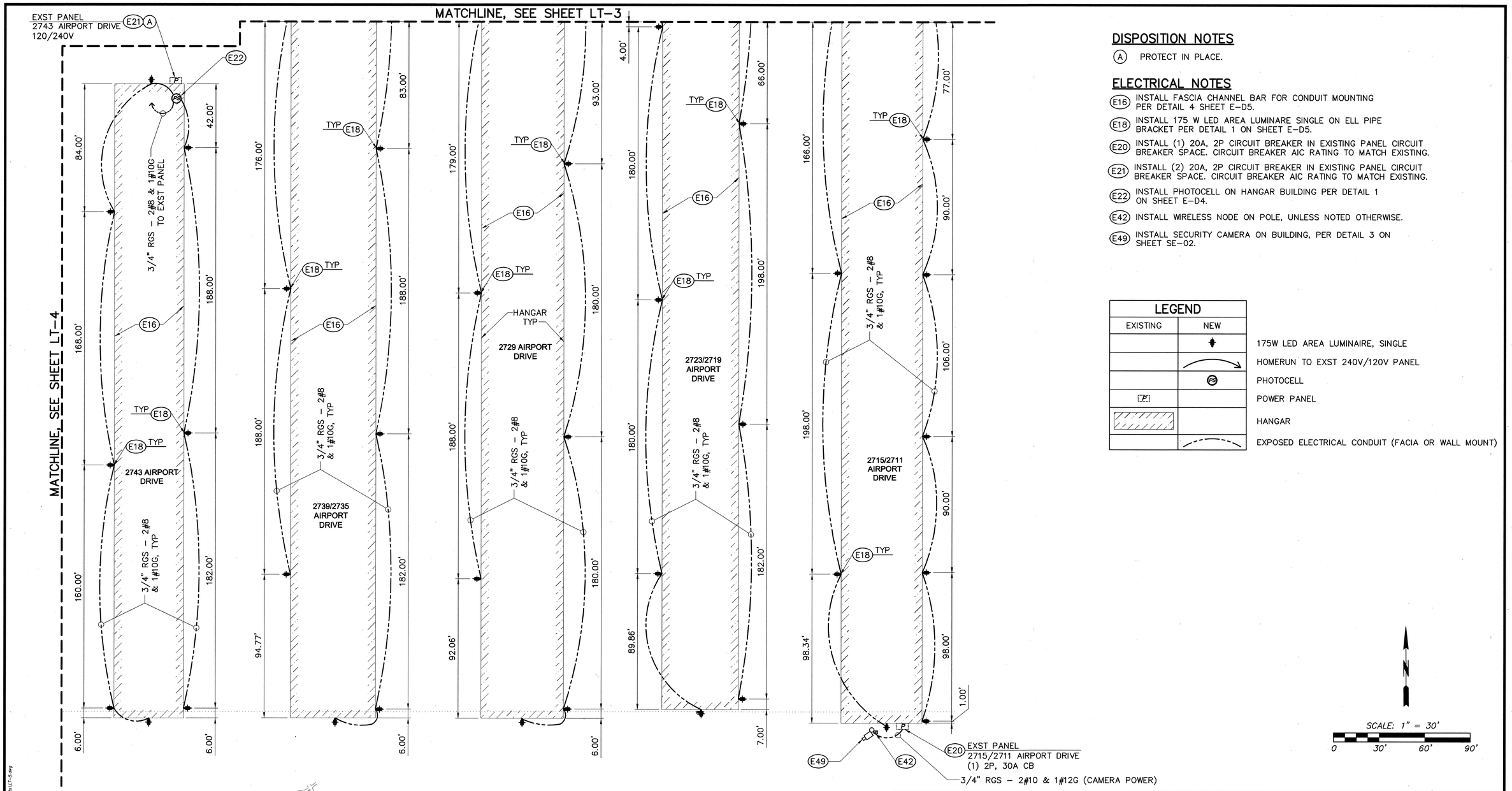

DISPOSITION NOTES

(A) PROTECT IN PLACE.

ELECTRICAL NOTES

(E16) INSTALL FASCIA CHANNEL BAR FOR CONDUIT MOUNTING PER DETAIL 4 SHEET E–D5.

(E18) INSTALL 175 W LED AREA LUMINARE SINGLE ON ELL PIPE BRACKET PER DETAIL 1 ON SHEET E–D5.

(E20) INSTALL (1) 20A, 2P CIRCUIT BREAKER IN EXISTING PANEL CIRCUIT BREAKER SPACE. CIRCUIT BREAKER AIC RATING TO MATCH EXISTING.

(E21) INSTALL (2) 20A, 2P CIRCUIT BREAKER IN EXISTING PANEL CIRCUIT BREAKER SPACE. CIRCUIT BREAKER AIC RATING TO MATCH EXISTING.

(E22) INSTALL PHOTOCELL ON HANGAR BUILDING PER DETAIL 1 ON SHEET E–D4.

(E42) INSTALL WIRELESS NODE ON POLE, UNLESS NOTED OTHERWISE.

(E49) INSTALL SECURITY CAMERA ON BUILDING, PER DETAIL 3 ON SHEET SE–02.

LEGEND

EXISTING	NEW	
		175W LED AREA LUMINAIRE, SINGLE
		HOMERUN TO EXST 240V/120V PANEL
	PS	PHOTOCELL
P		POWER PANEL
		HANGAR
		EXPOSED ELECTRICAL CONDUIT (FACIA OR WALL MOUNT)

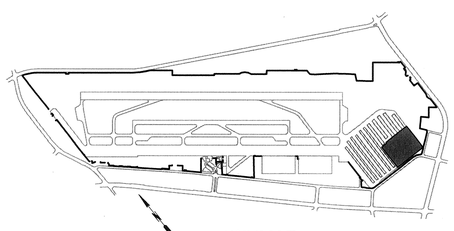

KEYMAP

REV	DATE	DESCRIPTION	BY	CHECKED

PLANS PREPARED BY:

AECOM

999 Town & Country Road
Orange, CA 92868
Phone: 714.567.2501
Fax: 714.567.2441
www.aecom.com

REGISTERED PROFESSIONAL ENGINEER BENJAMIN A. MACGRAGOR No. 61130 Exp. 9-30-14 ELECTRICAL STATE OF CALIFORNIA
10/02/13

CITY OF TORRANCE
PUBLIC WORKS DEPARTMENT
ZAMPERINI FIELD SECURITY PROJECT, FEAP 616
EAST T-HANGAR LIGHTING PLAN (4 OF 4)

DRAWN: PS
APPROVED: 10/10/13
DESIGNED: TB
CRAIG S. BILEZERIAN
CITY ENGINEER
R.C.E. NO. 55339
DATE
EXP. 12/31/14
PROJECT ENGINEER: D. YOUNG
SCALE: 1"=30'
SHEET 32 OF 42
LT-5
PLAN NO. **AP-177**

10/02/13 16:06 P:\60288618 Zamperini Field\000_CAD\006_Civil\Sheets\LT-5.dwg

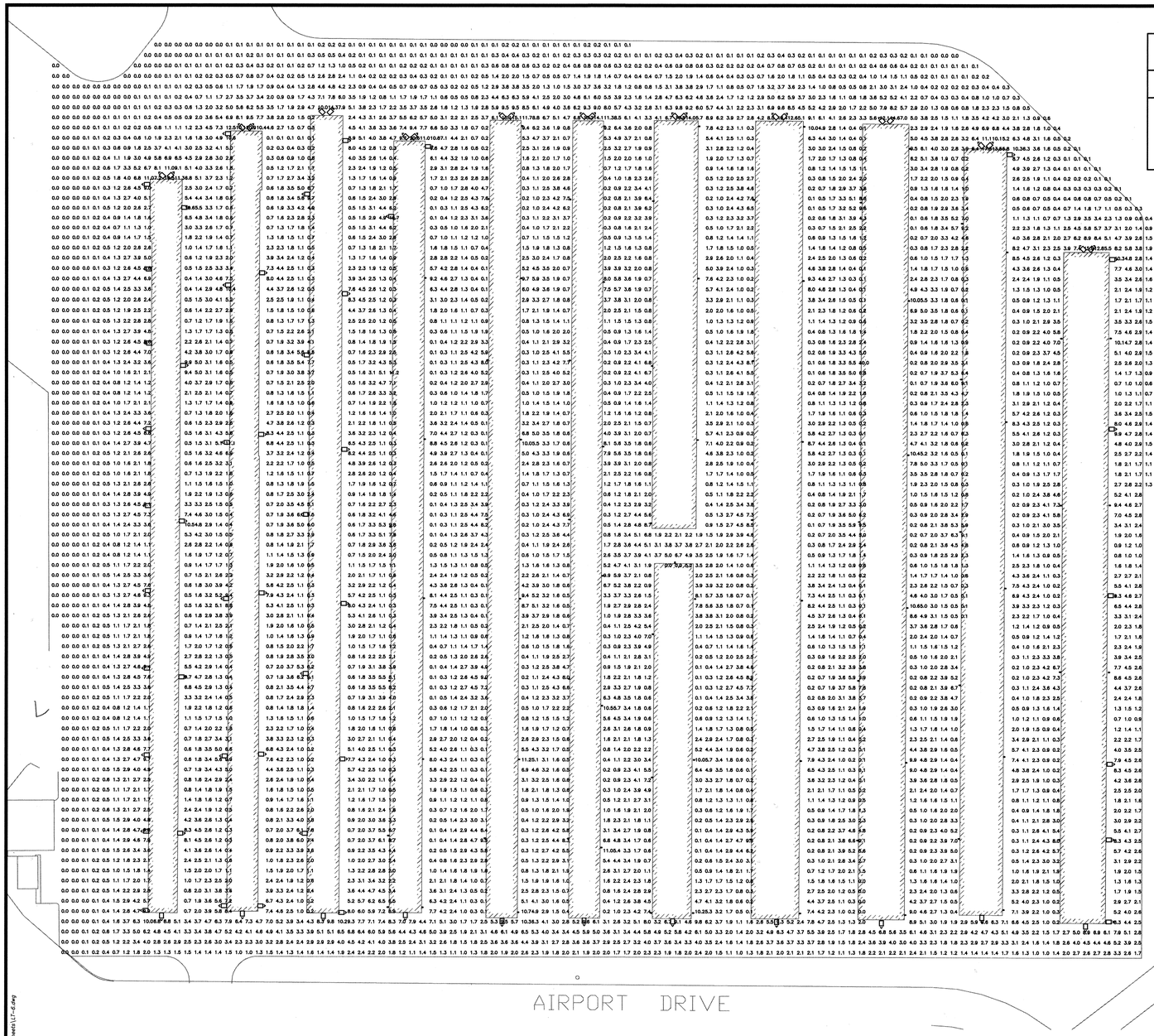

LUMINAIRE SCHEDULE

Symbol	Label	Qty	Catalog Number	Description	Lamp	File	Lumens	LLF	Watts
	F	163	DSX2 LED 100C 530 40K T4M MVOLT	DSX2 LED W/2 LARGE & 2 MEDIUM LIGHT ENGINES, (2) 530mA DRIVERS, 4000K LED, TYPE T4M OPTICS	LED	DSX2_LED_100C_530_40K_T4M_MVOLT.ies	Absolute	0.95	175

STATISTICS

Description	Symbol	Avg	Max	Min	Max/Min	Avg/Min
EAST T-HANGAR LIGHTING	+	2.2 fc	20.9 fc	0.0 fc	N / A	N / A

REV	DATE	DESCRIPTION	BY	CHECKED

PLANS PREPARED BY:

AECOM

999 Town & Country Road
Orange, CA 92868
Phone: 714.567.2501
Fax: 714.567.2441
www.aecom.com

REGISTERED PROFESSIONAL ENGINEER BENJAMIN A. MACARUSO C 51130 EXP. 9-30-14 ELECTRICAL STATE OF CALIFORNIA
10/02/13

CITY OF TORRANCE
PUBLIC WORKS DEPARTMENT
ZAMPERINI FIELD SECURITY PROJECT, FEAP 616
EAST T-HANGAR PHOTOMETRIC PLAN

DRAWN: PS

APPROVED: 10/10/13
CRAIG S. BILEZERIAN
CITY ENGINEER
R.C.E. NO. 55339
DATE
EXP. 12/31/14

DESIGNED: TB

PROJECT ENGINEER: D. YOUNG

SCALE: NONE

SHEET 33 OF 42

LT-6

PLAN NO. **AP-177**

10/02/13 16:07 P:\60298818 Zamperini Field\050_CAD\006_Civil\Sheets\LT-E.dwg

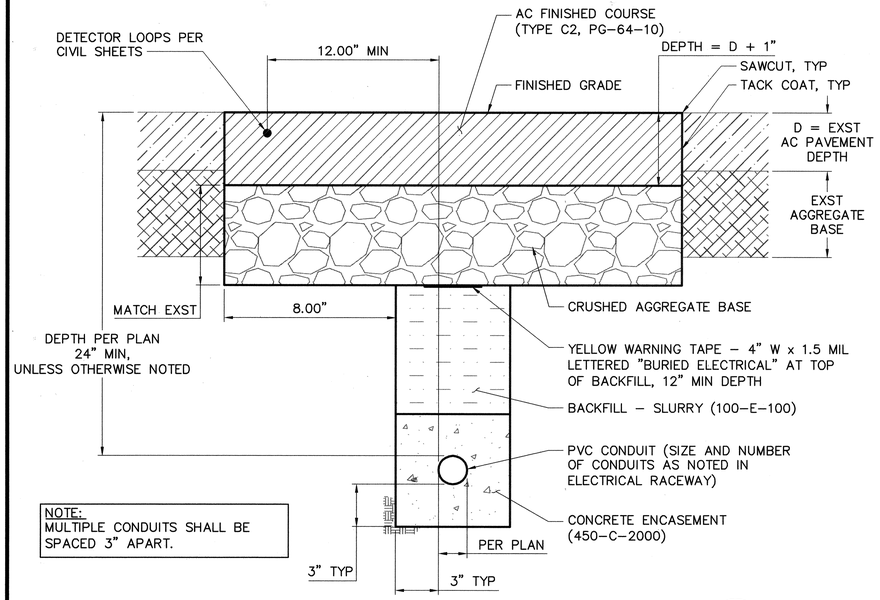

NOTE:
MULTIPLE CONDUITS SHALL BE SPACED 3" APART.

TYPICAL PVC DUCT UNDER PAVED AREAS (1/–)

NOT TO SCALE

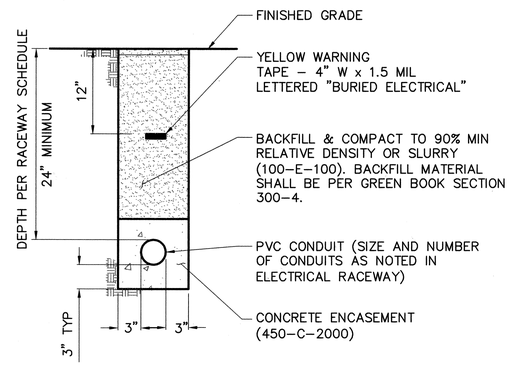

NOTE:
MULTIPLE CONDUITS SHALL BE SPACED 3" APART.

TYPICAL PVC DUCT NON-PAVED AREAS (2/–)

NOT TO SCALE

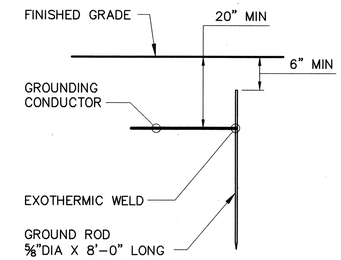

GENERAL NOTES

1. GROUNDING IS INCIDENTAL TO THE ASSOCIATED ITEMS REQUIRING GROUNDING, UNLESS NOTED OTHERWISE.
2. ALL GROUND CONNECTIONS SHALL BE UL LISTED FOR DIRECT EARTH BURIAL AND/OR INSTALLATION IN CONCRETE AS APPLICABLE.
3. WHERE INSTALLED IN MATERIALS THAT ACCELERATE THE CORROSION OF THE PROPER CONDUCTOR, THE GROUNDING CONDUCTOR SHALL BE TYPE TW INSULATED.
4. RESISTANCE TO GROUND OF EARTH GROUNDING SYSTEM SHALL NOT EXCEED 20 OHMS.

TYPICAL GROUND ROD (3/–)

SCALE: NOT TO SCALE

INTERIOR CONDUIT NOTES:
1. CONTRACTOR WILL NEED TO MAKE ARRANGEMENTS WITH THE AIRPORT TO GAIN INTERIOR ACCESS TO SURVEY AND INSTALL CONDUIT, SUPPORTS, ETC.

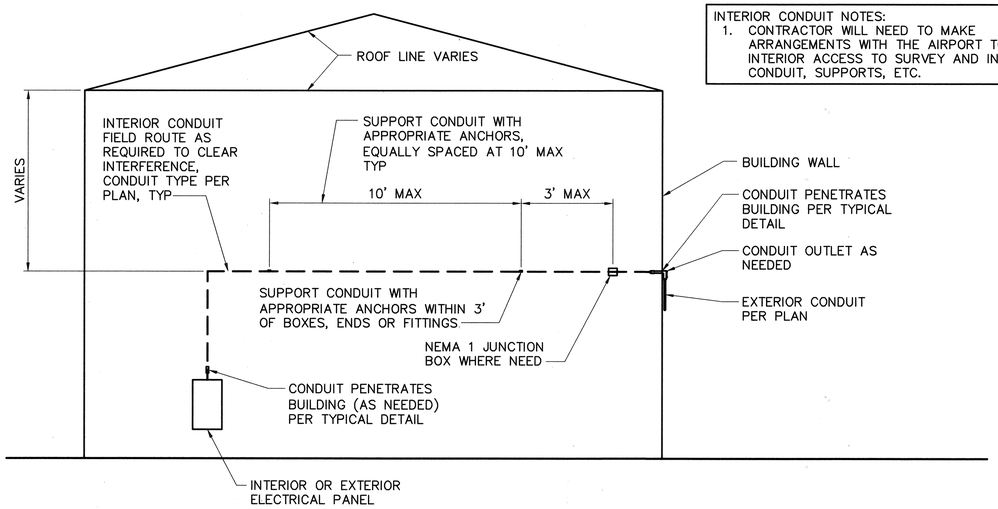

TYPICAL INTERIOR CONDUIT (4/–)

NOT TO SCALE

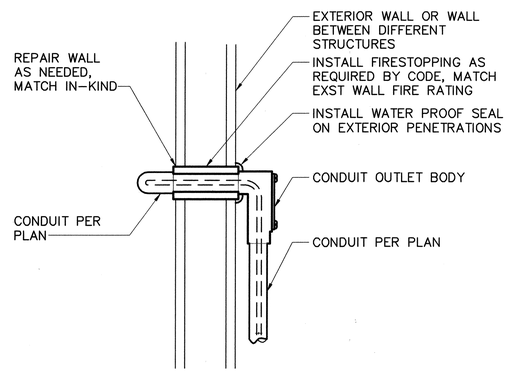

TYPICAL BUILDING PENETRATION (5/–)

NOT TO SCALE

REGISTERED PROFESSIONAL ENGINEER BENJAMIN A. MASCARENAS C 61 EXP. 9-30-14 ELECTRICAL STATE OF CALIFORNIA
10/02/13

PLANS PREPARED BY:

AECOM

999 Town & Country Road
Orange, CA 92868
Phone: 714.567.2501
Fax: 714.567.2441
www.aecom.com

REV	DATE	DESCRIPTION	BY	CHECKED

CITY OF TORRANCE
PUBLIC WORKS DEPARTMENT

ZAMPERINI FIELD SECURITY PROJECT, FEAP 616

TYPICAL ELECTRICAL DETAILS

DRAWN: PS	APPROVED: 10/10/13		
DESIGNED: PS	CRAIG S. BILEZERIAN CITY ENGINEER R.C.E. NO. 55339	DATE EXP. 12/31/14	
PROJECT ENGINEER: D. YOUNG	SCALE: 1"=40'	SHEET 34 OF 42	E-D1
	PLAN NO. AP-177		

10/02/13 16:07 P:\60288818 Zamperini Field\005_CAD\005_Civil\Sheets\E-D1.dwg

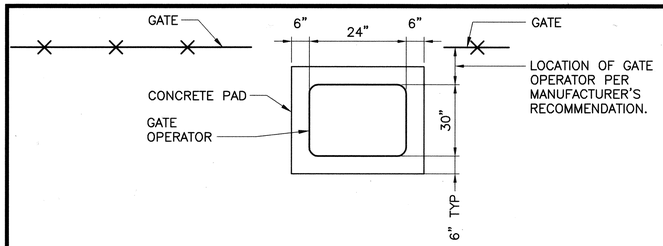

PLAN

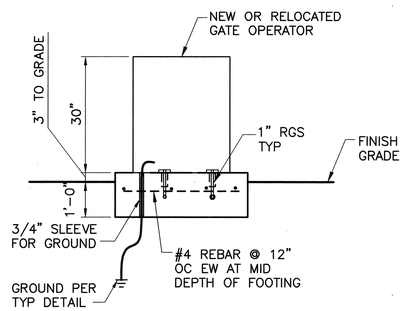

FRONT

GATE OPERATOR

SCALE: NOT TO SCALE

1 / –

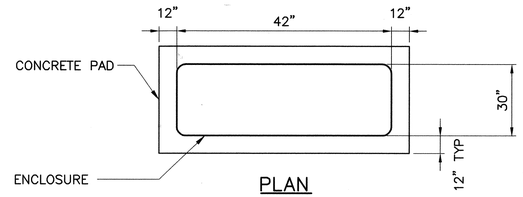

PLAN

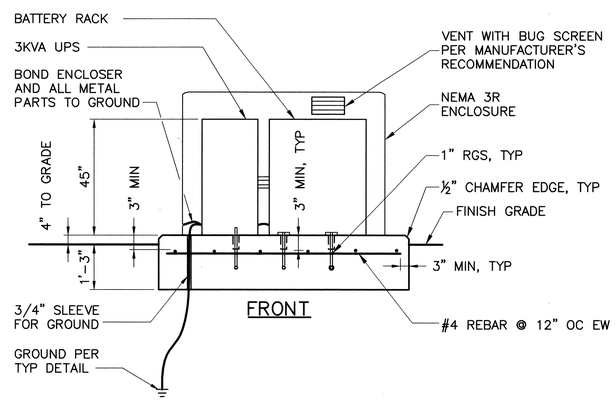

FRONT

GATE UNINTERRUPTIBLE POWER SUPPLY (UPS)

SCALE: NOT TO SCALE

2 / –

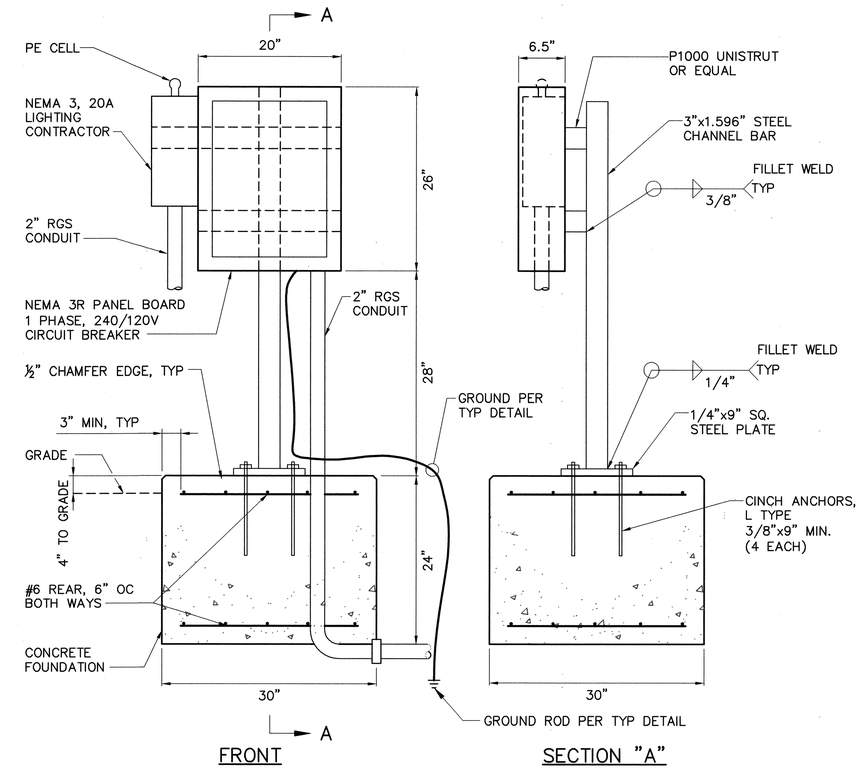

FRONT

SECTION "A"

SMALL POWER PANEL

SCALE: NOT TO SCALE

3 / –

GENERAL NOTES:

1. COORDINATE DIMENSIONS AND INSTALLATION METHODS WITH VENDOR TO CONFIRM CONSTRUCTABILITY; ADJUST AS NECESSARY.
2. CHAMFER ALL EXPOSED PCC EDGES A MINIMUM 1/2".
3. ELEVATION OF PCC PADS SHALL BE 3" MIN ABOVE GRADE.

REGISTERED PROFESSIONAL ENGINEER BENJAMIN A. MASCARENAS No. E 15130 EXP. 9-30-14 ELECTRICAL STATE OF CALIFORNIA

10/02/13

PLANS PREPARED BY:

AECOM

999 Town & Country Road
Orange, CA 92868
Phone: 714.567.2501
Fax: 714.567.2441
www.aecom.com

REV	DATE	DESCRIPTION	BY	CHECKED

CITY OF TORRANCE
PUBLIC WORKS DEPARTMENT
ZAMPERINI FIELD SECURITY PROJECT, FEAP 616
ELECTRICAL EQUIPMENT DETAILS

DRAWN: PS	APPROVED: 10/10/13		
DESIGNED: TB	CRAIG S. BILEZERIAN CITY ENGINEER R.C.E. NO. 55339	DATE EXP. 12/31/14	
PROJECT ENGINEER: D. YOUNG	SCALE: N/A	SHEET 35 OF 42	E-D2
	PLAN NO.	AP-177	

10/02/13 16:07 P:\60288818 Zamperini Field\000_CAD\006_Civil\Sheets\E-D2.dwg

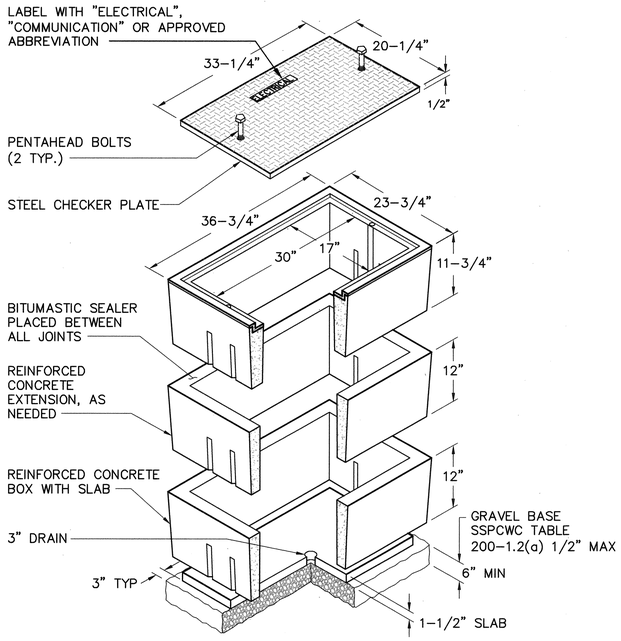

DESIGN LOAD: H-20 TRAFFIC RATED

1 PRECAST HANDHOLE

SCALE: NOT TO SCALE

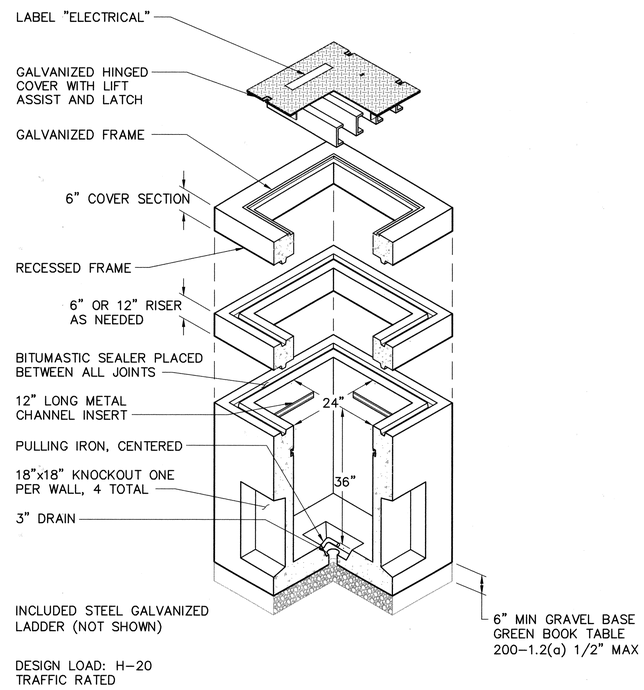

DESIGN LOAD: H-20 TRAFFIC RATED

2 PRECAST PULLBOX

SCALE: NOT TO SCALE

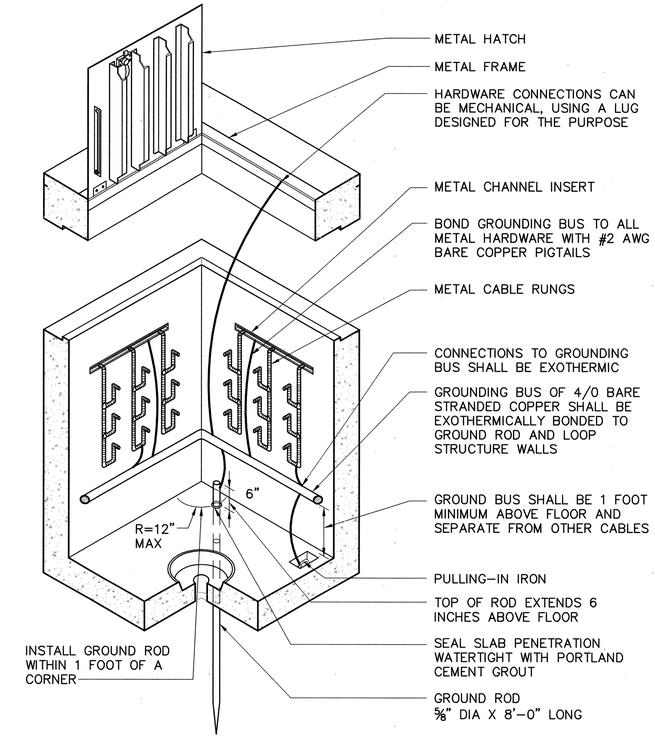

GROUND RODS SHALL BE INSTALLED IN PRECAST BOTTOM SLAB OF STRUCTURES BY DRILLING A HOLE THROUGH BOTTOM SLAB AND INSTALLING THE GROUND ROD. BOTTOM SLAB PENETRATION SHALL BE SEALED WATERTIGHT WITH PORTLAND CEMENT GROUT AROUND THE GROUND ROD.

ON CAST-IN-PLACE STRUCTURES, GROUND RODS SHALL BE INSTALLED PRIOR TO CASTING THE BOTTOM SLAB.

WHERE SOIL CONDITIONS DO NOT PERMIT DRIVING THE GROUND ROD INTO EARTH WITHOUT DAMAGE TO THE GROUND ROD, THE CONTRACTOR SHALL DRILL A 4-INCH DIAMETER HOLE INTO THE EARTH TO RECEIVE THE GROUND ROD. THE HOLE AROUND THE GROUND ROD SHALL BE FILLED THROUGHOUT ITS LENGTH, BELOW SLAB, WITH PORTLAND CEMENT GROUT.

3 TYPICAL STRUCTURE GROUNDING

SCALE: NOT TO SCALE

GENERAL GROUNDING NOTES

1. GROUNDING IS INCIDENTAL TO THE ASSOCIATED ITEMS REQUIRING GROUNDING, UNLESS NOTED OTHERWISE.
2. ALL GROUND CONNECTIONS SHALL BE UL LISTED FOR DIRECT EARTH BURIAL AND/OR INSTALLATION IN CONCRETE AS APPLICABLE.
3. WHERE INSTALLED IN MATERIALS THAT ACCELERATE THE CORROSION OF THE PROPER CONDUCTOR, THE COUNTERPOISE MUST BE TYPE TW INSULATED.
4. RESISTANCE TO GROUND OF EARTH GROUNDING SYSTEM SHALL NOT EXCEED 20 OHMS.

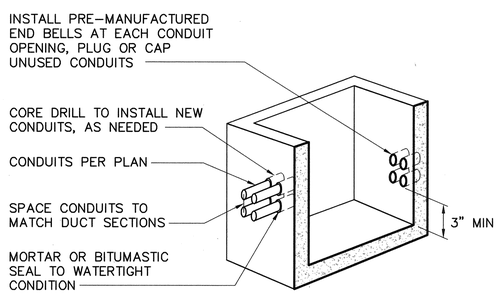

4 TYPICAL STRUCTURE CONDUIT PENETRATION

SCALE: NOT TO SCALE

REGISTERED PROFESSIONAL ENGINEER BENJAMIN A. MASCARENHAS No. 15130 ELECTRICAL STATE OF CALIFORNIA EXP. 9-30-14 10/02/13

PLANS PREPARED BY:

AECOM

999 Town & Country Road
Orange, CA 92868
Phone: 714.567.2501
Fax: 714.567.2441
www.aecom.com

REV	DATE	DESCRIPTION	BY	CHECKED

CITY OF TORRANCE
PUBLIC WORKS DEPARTMENT
ZAMPERINI FIELD SECURITY PROJECT, FEAP 616
ELECTRCIAL PULLBOX DETAILS

DRAWN: PS
DESIGNED: SQ
PROJECT ENGINEER: D. YOUNG

APPROVED: 10/10/13
CRAIG S. BILEZERIAN DATE
CITY ENGINEER
R.C.E. NO. 55339 EXP. 12/31/14

SCALE: 1"=40' SHEET 36 OF 42 E-D3
PLAN NO. **AP-177**

10/02/13 16:07 P:\60288818 Zamperini Field\000_CAD\005_Civil\Sheets\E-03.dwg

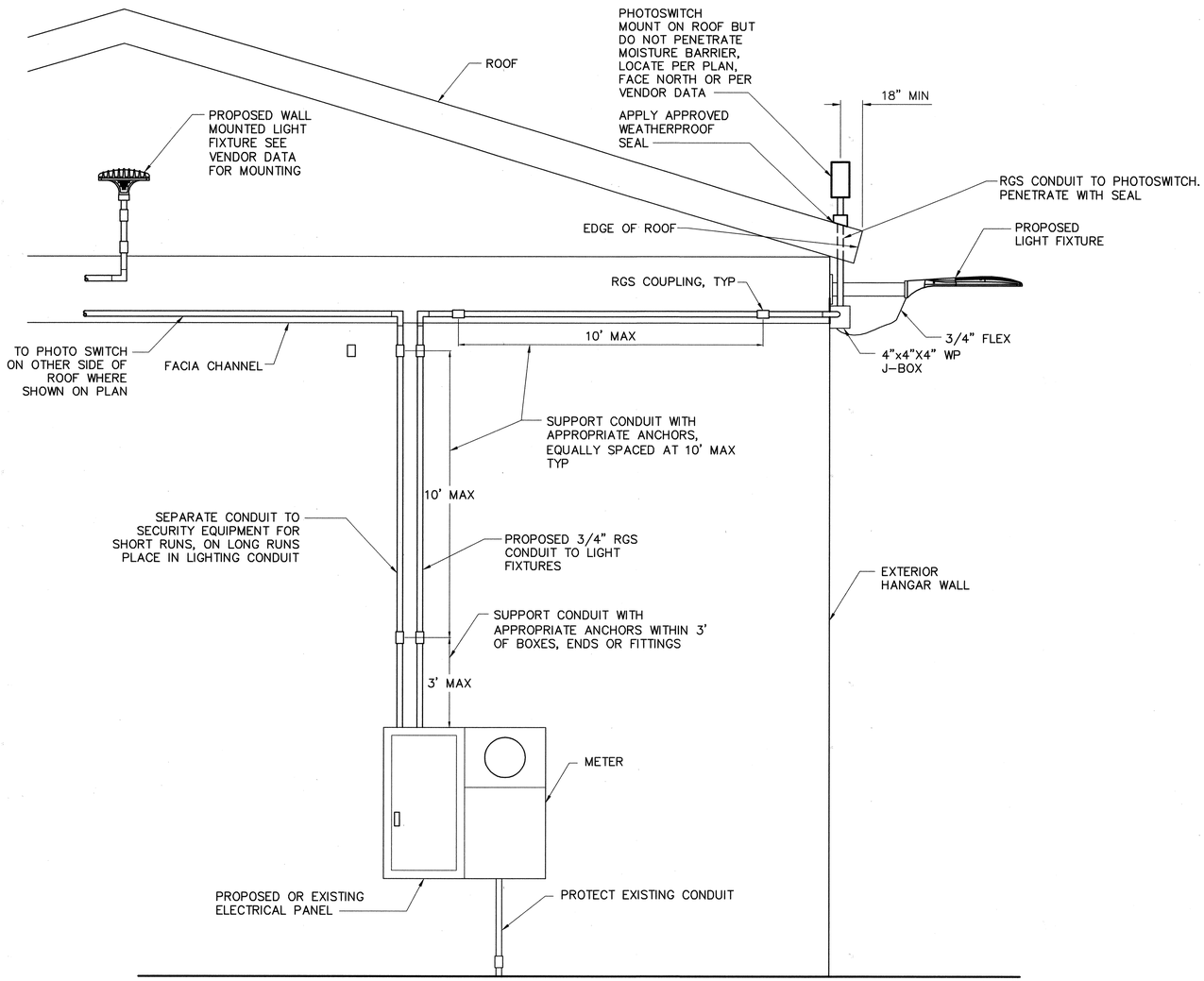

TYPICAL HANGAR POWER

SCALE: NOT TO SCALE

1 / –

10/02/13 16:07 P:\60289818 Zamperini Field\000_CAD\006_Civil\Sheets\E-D4.dwg

REGISTERED PROFESSIONAL ENGINEER BENJAMIN A. MASCIOPINTO No. 61301 EXP. 9-30-14 ELECTRICAL STATE OF CALIFORNIA
10/02/13

PLANS PREPARED BY:

AECOM

999 Town & Country Road
Orange, CA 92868
Phone: 714.567.2501
Fax: 714.567.2441
www.aecom.com

REV	DATE	DESCRIPTION	BY	CHECKED

CITY OF TORRANCE
PUBLIC WORKS DEPARTMENT
ZAMPERINI FIELD SECURITY PROJECT, FEAP 616
HANGAR POWER DETAILS

DRAWN: PS
APPROVED: 10/10/13
DESIGNED: TB
CRAIG S. BILEZERIAN DATE
CITY ENGINEER
R.C.E. NO. 55339 EXP. 12/31/14
PROJECT ENGINEER: D. YOUNG
SCALE: 1"=40'
SHEET 37 OF 42
E-D4
PLAN NO. **AP-177**

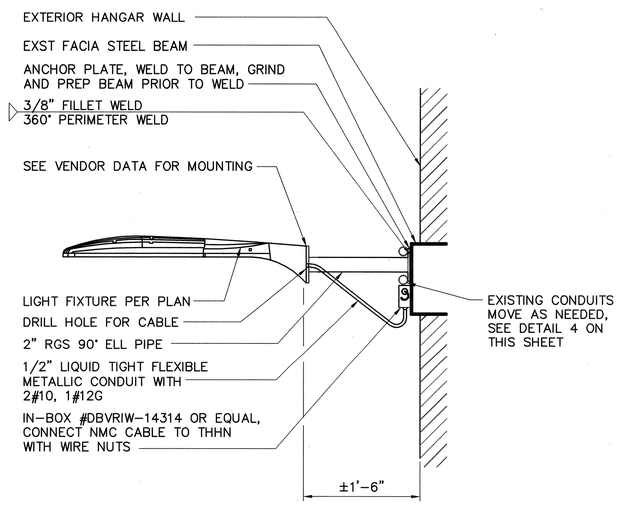

ELL PIPE BRACKET

SCALE: NOT TO SCALE

1 / –

HANGAR NOTES:
1. CONTRACTOR SHALL PROVIDE ALL REQUIRED SUPPORTS FOR THE LIGHTS.
2. CONTRACTOR WILL NEED TO MAKE ARRANGEMENTS WITH THE AIRPORT AND HANGAR TENANTS TO GAIN INTERIOR ACCESS TO INSTALL CONDUIT AND STEEL STRUTS FOR FIXTURE'S STRUCTURAL SUPPORT.

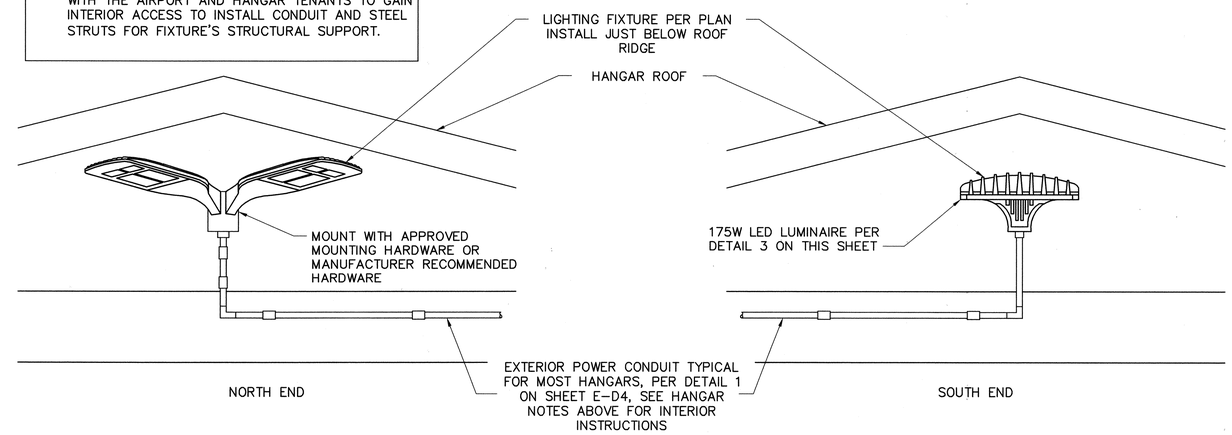

HANGAR END LIGHT INSTALLATION

SCALE: NOT TO SCALE

2 / –

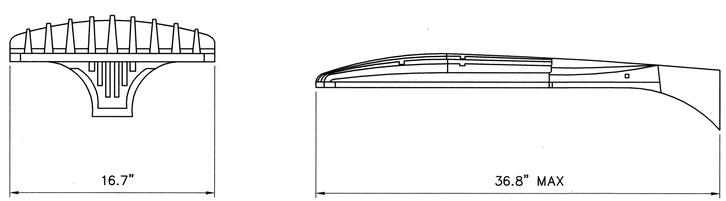

NOTE: MOUNT AND AIM PER MANUFACTURER'S RECOMMENDATIONS

TYPICAL 175 WATTS LED LUMINAIRE

SCALE: NOT TO SCALE

3 / –

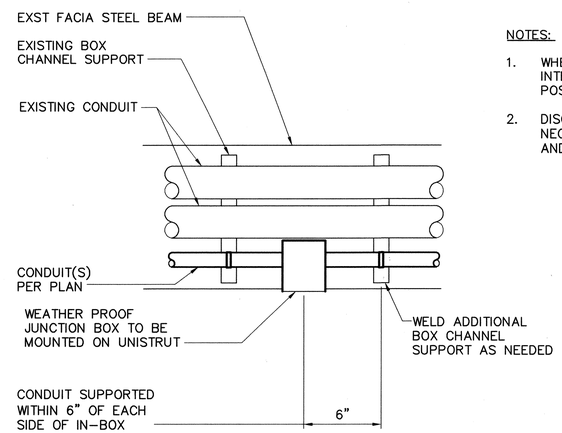

NOTES:

1. WHERE EXISTING FACIA MOUNTED CONDUITS INTERFERE, RELOCATE EXISTING UPWARD AS HIGH AS POSSIBLE.
2. DISCONNECT AND TEMPORARY SUPPORT CONDUITS AS NECESSARY TO WELD PREP FACIA STEEL SURFACE AND PERFORM FILLET WELDS.

FACIA CHANNEL BAR MOUNTED CONDUIT

SCALE: NOT TO SCALE

4 / –

REGISTERED PROFESSIONAL ENGINEER BENJAMIN A. MACGREGOR No. E130 Exp. 9-30-14 ELECTRICAL STATE OF CALIFORNIA
10/02/13

PLANS PREPARED BY:

AECOM

999 Town & Country Road
Orange, CA 92868
Phone: 714.567.2501
Fax: 714.567.2441
www.aecom.com

REV	DATE	DESCRIPTION	BY	CHECKED

CITY OF TORRANCE
PUBLIC WORKS DEPARTMENT
ZAMPERINI FIELD SECURITY PROJECT, FEAP 616
HANGAR LIGHTING DETAILS

DRAWN: PS
DESIGNED: TB
PROJECT ENGINEER: D. YOUNG

APPROVED: 10/10/13
CRAIG S. BILEZERIAN
CITY ENGINEER
R.C.E. NO. 55339
DATE EXP. 12/31/14

SCALE: 1"=40'
SHEET 38 OF 42
E-D5
PLAN NO. **AP-177**

10/02/13 16:07 P:\60298818 Zamperini Field\000_CAD\006_Civil\Sheets\E-D5.dwg

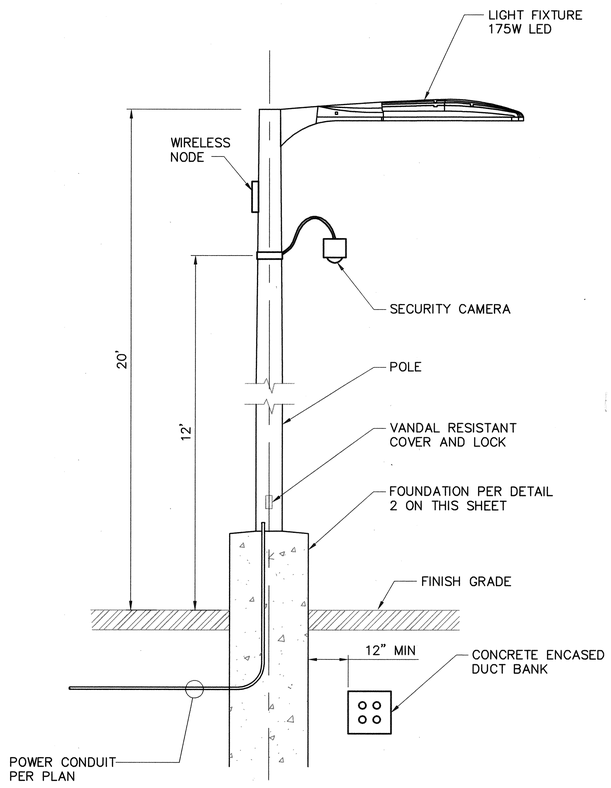

POLE MOUNTED AREA LIGHT WITH SECURITY CAMERA (1/–)

SCALE: NOT TO SCALE

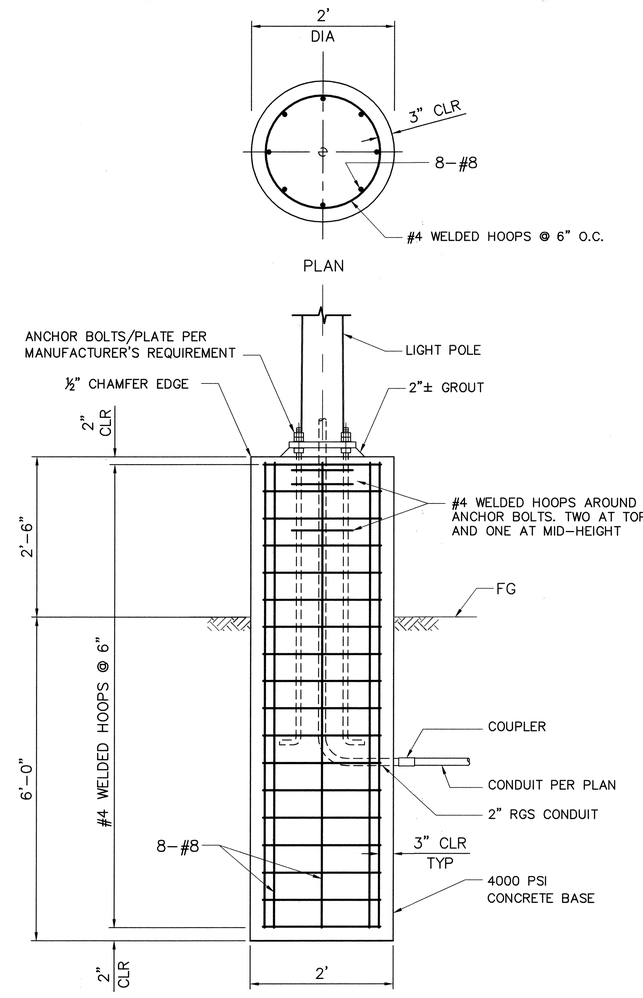

POLE FOUNDATION DETAIL (2/–)

SCALE: NOT TO SCALE

NOTE:
POLE FOUNDATION DETAIL IS FOR ESTIMATING PURPOSES ONLY. BASED UPON POLE SELECTED, CONTRACTOR SHALL SUBMIT DETAILED SHOP DRAWINGS OF POLE AND REINFORCED FOUNDATION WITH ENGINEER'S STAMP.

REV	DATE	DESCRIPTION	BY	CHECKED

REGISTERED PROFESSIONAL ENGINEER BENJAMIN A. MASCIOPINTO No. 6130 Exp. 9-30-14 ELECTRICAL STATE OF CALIFORNIA 10/02/13

PLANS PREPARED BY:

AECOM

999 Town & Country Road
Orange, CA 92868
Phone: 714.567.2501
Fax: 714.567.2441
www.aecom.com

CITY OF TORRANCE
PUBLIC WORKS DEPARTMENT

ZAMPERINI FIELD SECURITY PROJECT, FEAP 616

POLE LIGHTING DETAILS

DRAWN: PS

APPROVED: 10/10/13

DESIGNED: SQ

CRAIG S. BILEZERIAN
CITY ENGINEER
R.C.E. NO. 55339

DATE
EXP. 12/31/14

PROJECT ENGINEER: D. YOUNG

SCALE: 1"=40'

SHEET 39 OF 42

E-D6

PLAN NO. **AP-177**

10/02/13 16:07 P:\60288818 Zamperini Field\000_CAD\006_Civil\Sheets\E-D6.dwg

PANEL DESIGNATION SW — *LOCATION: NEAR WASH RACK*
DESCRIPTION 22 KA, MLO — *OUTDOOR: UNISTRUT MOUNT*
VOLTAGE – PHASE TO NEUTRAL 120/240 VOLTS
BUS AMPS 100 AMPS

DESCRIPTION	LOAD VA	LOAD AMPS	MINIMUM BREAKER SIZE	CIRCUIT NUMBER		MINIMUM BREAKER SIZE	LOAD AMPS	LOAD VA	DESCRIPTION
(E) LOAD	1800	15.0	30/1P	1	2	15/1P	4.2	500	(E) PHOTO CELL
(E) CLARIFIER PIT	3027	25.2	20/1P	3	4		0.0	0	SPACE
(E) LOAD	3027	25.2	20/1P	5	6	20/2P	8.3	1000	(E) LIGHT POLES
GATE R SECURITY (ALPR, SEC CAMERA & LT POLE)	250	2.1	20/2P	7	8	–	8.3	1000	(E) LIGHT POLES
GATE R SECURITY (ALPR, SEC CAMERA & LT POLE)	250	2.1	–	9	10	20/2P	8.3	1000	GATES O, P & #23940 SECURITY CAMERA & LTG
SPACE	0	0.0	0	11	12	–	8.3	1000	GATES O, P & #23940 SECURITY CAMERA & LTG
SUB TOTAL VOLT–AMPERES	8354							4500	
TOTAL VOLT–AMPERES	10854								
LIGHTING 25% DEMAND ALLOWANCE (VA)	2500								
COMPUTED DEMAND LOAD (VA)	13354								
TOTAL	13354	55.6	AMPS						

PANEL SCHEDULE: EXISTING PANEL "SW"
SCALE: NOT TO SCALE

PANEL DESIGNATION GATE F SERVICE PEDESTAL — *LOCATION: PERIMETER FENCE ALONG AIRPORT DRIVE*
DESCRIPTION 22 KA, MLO — *OUTDOOR, PEDESTAL MOUNT*
VOLTAGE – PHASE TO NEUTRAL 120/240 VOLTS
BUS AMPS 100 AMPS

DESCRIPTION	LOAD VA	LOAD AMPS	MINIMUM BREAKER SIZE	CIRCUIT NUMBER		MINIMUM BREAKER SIZE	LOAD AMPS	LOAD VA	DESCRIPTION
UPS (2) 3 KVA	7500	31.3	40/2P*	1	2	100/2P	0.0	0	MAIN BREAKER
ALPR, CAMERA AND LIGHT POLE	500	4.2	20/2P**	3	4	–	0.0	0	MAIN BREAKER
(E) LOAD IN (E) TANDEM CIRCUIT BREAKER	200	1.7	20/2P	5	6	20/1P	1.5	180	(E) LOAD
SPACE				7	8	90/2P	60.0	7200	(E) LOAD
(E) LOAD	300	2.5	20/1P	9	10	–	60.0	7200	(E) LOAD
SUB TOTAL VOLT–AMPERES	8500							14580	
TOTAL VOLT–AMPERES	22424								
LIGHTING 25% DEMAND ALLOWANCE (VA)	656								
COMPUTED DEMAND LOAD (VA)	23080								
TOTAL	23080	96.2	AMPS						

* – NEW TANDEM CIRCUIT BREAKER IN PANEL EXISTING SPACE. CIRCUIT BREAKER AIC RATING TO MATCH EXISTING
** – NEW TANDEM CIRCUIT BREAKER REPLACING EXISTING CIRCUIT BREAKER. CIRCUIT BREAKER AIC RATING TO MATCH EXISTING

PANEL SCHEDULE: GATE F (EXISTING SERVICE PEDESTAL "SP1")
SCALE: NOT TO SCALE

PANEL DESIGNATION PANEL "A" — *LOCATION: CONTROL TOWER*
DESCRIPTION 22 KA, MLO — *OUTDOOR, SURFACE MOUNT*
VOLTAGE – PHASE TO NEUTRAL 120/240 VOLTS
BUS AMPS 100 AMPS — NEMA 3R

DESCRIPTION	LOAD VA	LOAD AMPS	MINIMUM BREAKER SIZE	CIRCUIT NUMBER		MINIMUM BREAKER SIZE	LOAD AMPS	LOAD VA	DESCRIPTION
SPARE	0	0.0	20/1P	1	2	20/1P	0.8	100	GATE A: SECURITY CAMERA & WIRELESS NODE
SPARE	0	0.0	20/1P	3	4	20/2P	15.6	1875	UPS
LIGHT POLE & ALPR	122.5	1.0	20/2P	5	6	–	15.6	1875	UPS
LIGHT POLE & ALPR	122.5	1.0	–	7	8	0	0.0	0	SPACE
SPACE	0	0.0	0	9	10	0	0.0	0	SPACE
SPACE	0	0.0	0	11	12	0	0.0	0	SPACE
SUB TOTAL VOLT–AMPERES	245.000 000							3850	
TOTAL VOLT–AMPERES	4095								
LIGHTING 25% DEMAND ALLOWANCE (VA)	306								
COMPUTED DEMAND LOAD (VA)	4401								
TOTAL	4401	18.3	AMPS						

PANEL SCHEDULE: GATE A (EXISTING PANEL "A")
SCALE: NOT TO SCALE

REGISTERED PROFESSIONAL ENGINEER BENJAMIN A. MASCARENAS C 61130 EXP. 9-30-14 ELECTRICAL STATE OF CALIFORNIA
10/02/13

PLANS PREPARED BY:
AECOM
999 Town & Country Road
Orange, CA 92868
Phone: 714.567.2501
Fax: 714.567.2441
www.aecom.com

REV	DATE	DESCRIPTION	BY	CHECKED

CITY OF TORRANCE
PUBLIC WORKS DEPARTMENT
ZAMPERINI FIELD SECURITY PROJECT, FEAP 616
PANEL SCHEDULES

DRAWN: PS
DESIGNED: PS
PROJECT ENGINEER: D. YOUNG
APPROVED: 10/10/13
CRAIG S. BILEZERIAN — DATE
CITY ENGINEER
R.C.E. NO. 55339 — EXP. 12/31/14
SCALE: NA — SHEET 40 OF 42 — E-P1
PLAN NO. **AP-177**

10/02/13 16:07 P:\60288818 Zamperini Field\000_CAD\006_Civil\Sheets\E-P1.dwg

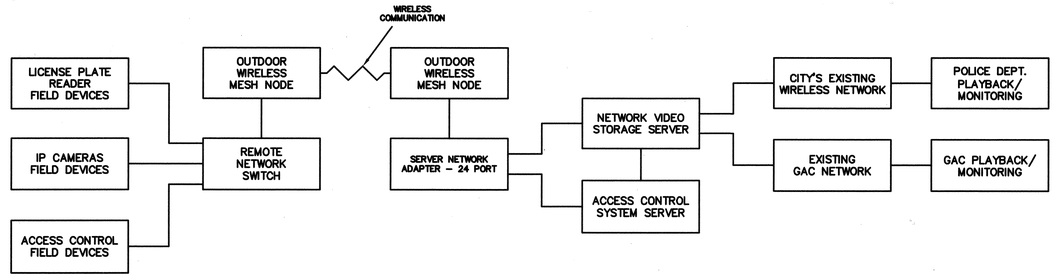

FIELD EQUIPMENT (EXTERIOR)
@ GATES A, F & R

GAC EQUIPMENT (INTERIOR)

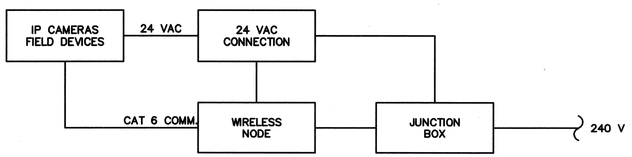

FIELD EQUIPMENT (EXTERIOR)
@ GATES A, F & R

INTEGRATED SYSTEM BLOCK DIAGRAM (1)

SCALE: NONE

PLAN NOTES BY SYMBOL "(X)"

1. ALL SECURITY EQUIPMENT IN ADMINISTRATION – SECURITY CLOSET SHALL BE POWERED BY THE SECURITY UPS.
2. USE CONCRETE RATED LAG BOLTS AND ANCHORS TO SECURE CAMERA.

GENERAL NOTES:

1. PROVIDE ALL NECESSARY SYSTEM CONDUITS AND WIRING FOR EQUIPMENT AND DEVICES INDICATED FOR A COMPLETE AND FUNCTIONAL INSTALLATION. REFER TO FLOOR PLANS FOR ALL EQUIPMENT LOCATIONS.

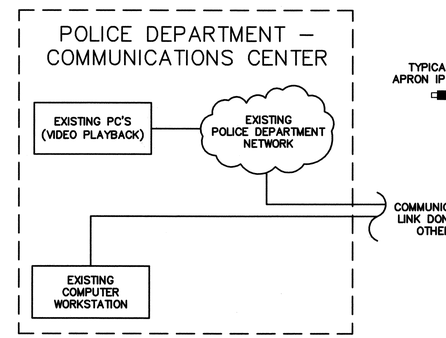

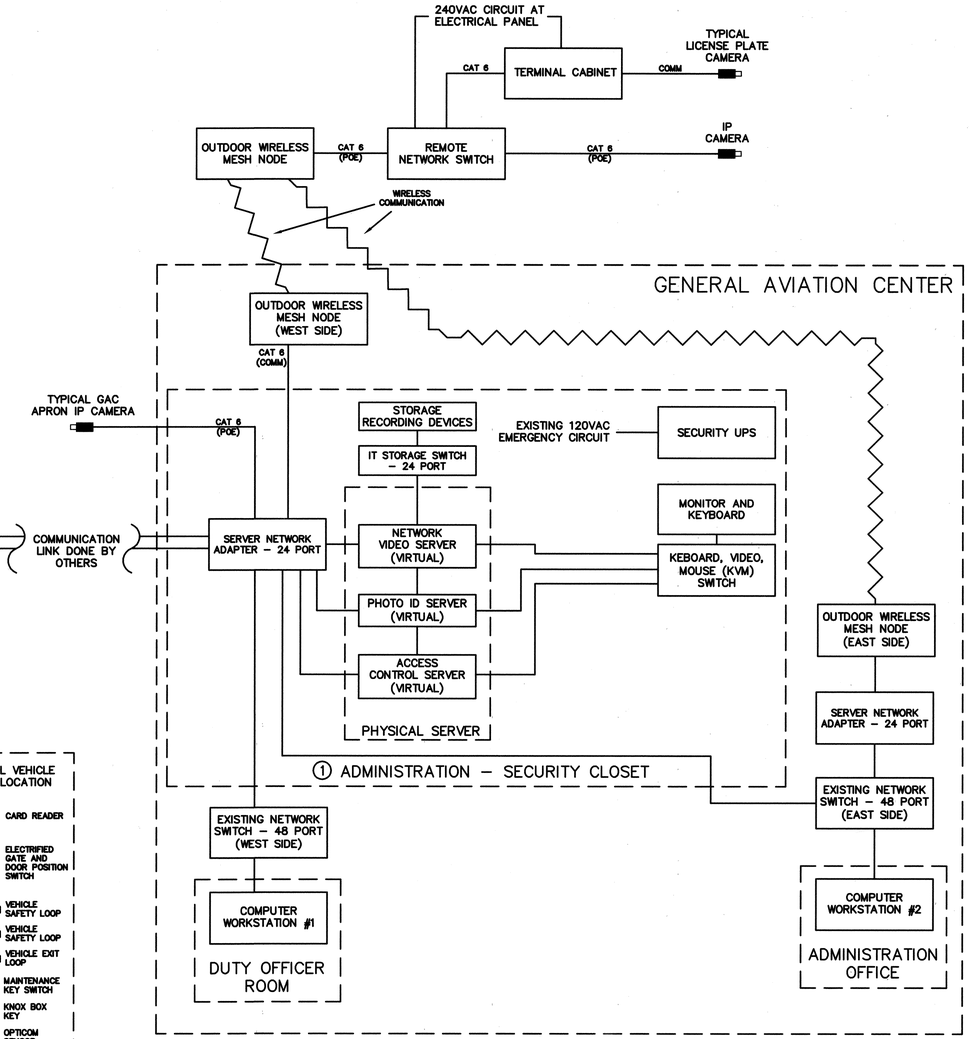

SECURITY SYSTEM BLOCK DIAGRAM (3)

SCALE: NONE

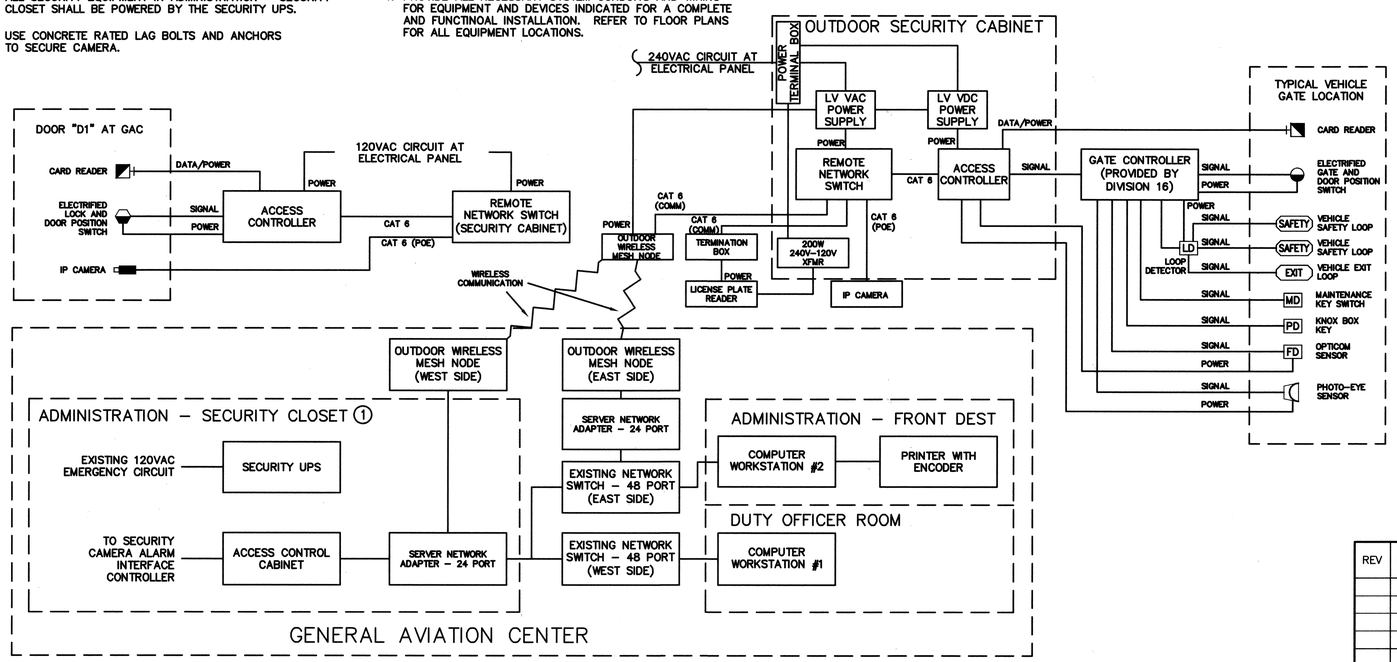

ACCESS CONTROL SYSTEM BLOCK DIAGRAM (2)

SCALE: NONE

10/02/13 15:51 P:\60289818 Zamperini Field\000_CAD\006_Civil\Sheets\SE-01.dwg

REV	DATE	DESCRIPTION	BY	CHECKED

PLANS PREPARED BY:

AECOM

999 Town & Country Road
Orange, CA 92868
Phone: 714.567.2501
Fax: 714.567.2441
www.aecom.com

10/02/13

CITY OF TORRANCE
PUBLIC WORKS DEPARTMENT
ZAMPERINI FIELD SECURITY PROJECT, FEAP 616
SYSTEM BLOCK DIAGRAMS

DRAWN: AG
DESIGNED: DY
PROJECT ENGINEER: D. YOUNG

APPROVED: 10/10/13
CRAIG S. BILEZERIAN DATE
CITY ENGINEER
R.C.E. NO. 55339 EXP. 12/31/14

SCALE: 1"=5' SHEET 41 OF 42 SE-01
PLAN NO. **AP-177**

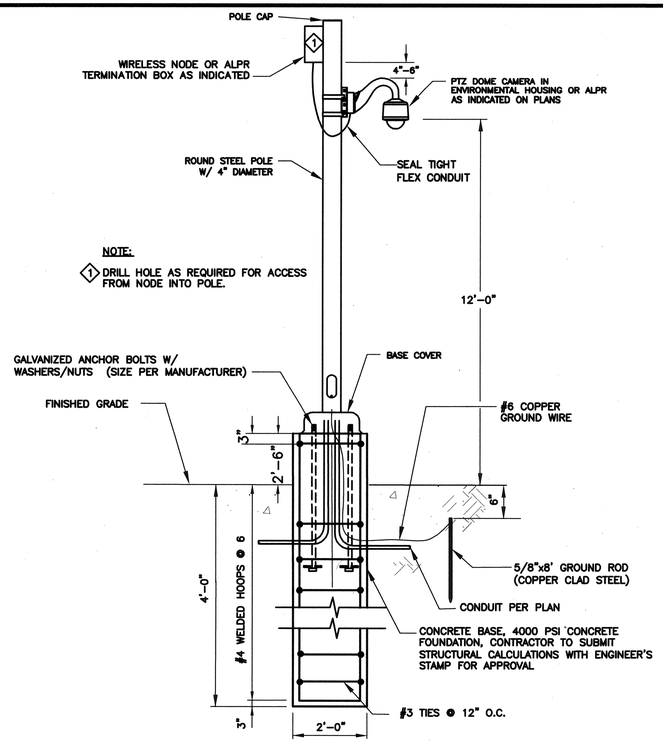

TYPICAL SECURITY CAMERA/ALPR POLE DETAIL – GATES A, R & F (1 / –)

SCALE: NONE

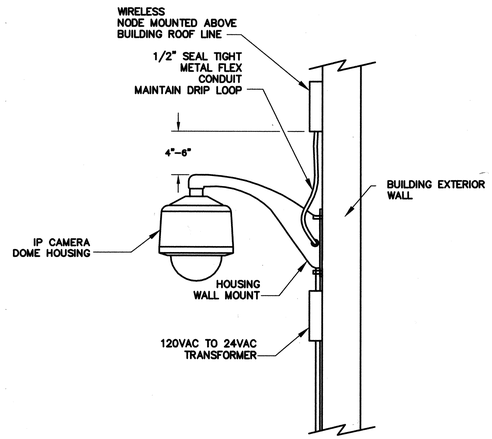

PENDANT MTD DOME CAMERA WITH WIRELESS NODE (2 / –)

SCALE: NONE

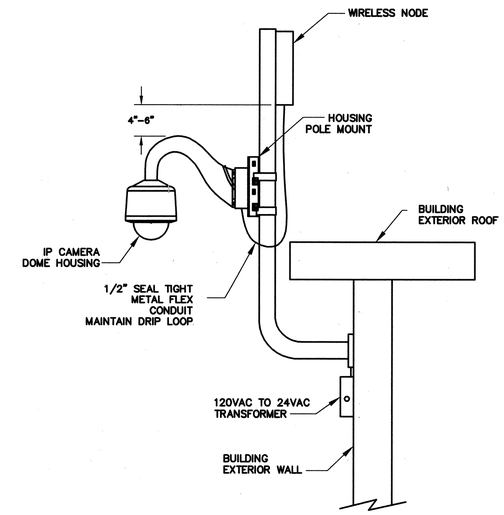

BUILDING/WALL MTD DOME CAMERA WITH WIRELESS NODE (3 / –)

SCALE: NONE

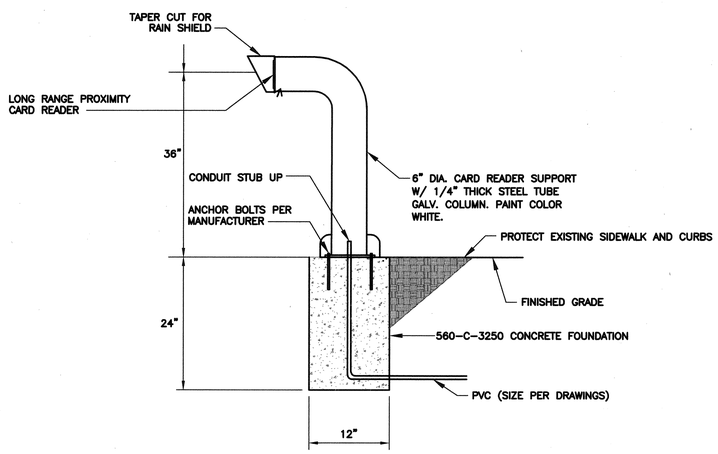

GATE CARD READER / KEYSWITCH MOUNTING (4 / –)

SCALE: NONE

10/02/13 16:07 P:\60328818 Zamperini Field\DGL_CAD\DWG_Civil\Sheets\SE-02.dwg

REGISTERED PROFESSIONAL ENGINEER BENJAMIN A. MACARIO No. 51301 EXP. 9-30-14 ELECTRICAL STATE OF CALIFORNIA
10/02/13

PLANS PREPARED BY:

AECOM

999 Town & Country Road
Orange, CA 92868
Phone: 714.567.2501
Fax: 714.567.2441
www.aecom.com

REV	DATE	DESCRIPTION	BY	CHECKED

CITY OF TORRANCE
PUBLIC WORKS DEPARTMENT
ZAMPERINI FIELD SECURITY PROJECT, FEAP 616
SECURITY INSTALLATION DETAILS

DRAWN: AG
DESIGNED: DY
PROJECT ENGINEER: D. YOUNG

APPROVED: 10/10/13
CRAIG S. BILEZERIAN
CITY ENGINEER
R.C.E. NO. 55339
DATE
EXP. 12/31/14

SCALE: 1"=5'
SHEET 42 OF 42
SE-02
PLAN NO. **AP-177**