APPENDIX I

PUBLIC WORKS AGREEMENT

PUBLIC WORKS AGREEMENT

This PUBLIC WORKS AGREEMENT ("Agreement") is made and entered into as of DATE (the "Effective Date"), by and between the CITY OF TORRANCE, a municipal corporation ("CITY"), and CONTRACTOR NAME, TYPE OF ENTITY ("CONTRACTOR").

RECITALS:

A. The CITY wishes to retain the services of an experienced and qualified CONTRACTOR to construct the **PROJECT NAME & BID NUMBER**;

B. In order to obtain the desired services, The CITY has circulated a Notice Inviting Bids for the construction of the **PROJECT NAME & BID NUMBER** (the "NIB"); and

C. CONTRACTOR has submitted a Bid (the "Bid") in response to the NIB. CONTRACTOR represents that it is qualified to perform those services requested in the Plans and Specifications. Based upon its review of all Bids submitted in response to the NIB, The CITY is willing to award the contract to CONTRACTOR.

AGREEMENT:

1. SERVICES TO BE PERFORMED BY CONTRACTOR

CONTRACTOR will provide the services and install those materials listed in the Plans and Specifications, which are on file in the Public Works Department. The NIB and the Plans and Specifications are made a part of this Agreement. A copy of the Bid is attached as Exhibit A.

2. TERM

Unless earlier terminated in accordance with Paragraph 4 below, this Agreement will continue in full force and effect for two years from the Effective Date.

3. COMPENSATION

A. CONTRACTOR's Fee.

For services rendered pursuant to this Agreement, CONTRACTOR will be paid in accordance with CONTRACTOR's Bid; provided, however, that in no event will the total amount of money paid the CONTRACTOR, for services initially contemplated by this Agreement, exceed the sum of $INSERT DOLLAR AMOUNT ("Agreement Sum"), plus a contingency of $INSERT DOLLAR AMOUNT, if first approved in writing by the CITY.

B. Schedule of Payment.
Provided that the CONTRACTOR is not in default under the terms of this Agreement, upon presentation of an invoice, CONTRACTOR will be paid monthly, within 30 days after the date of the monthly invoice.

4. TERMINATION OF AGREEMENT

A. Termination by CITY for Convenience.

1. CITY may, at any time, terminate the Agreement for CITY's convenience and without cause.

2. Upon receipt of written notice from CITY of such termination for CITY's convenience, CONTRACTOR will:

   a) cease operations as directed by CITY in the notice;
   b) take actions necessary, or that CITY may direct, for the protection and preservation of the work; and
   c) except for work directed to be performed prior to the effective date of termination stated in the notice, terminate all existing subcontracts and purchase orders and enter into no further subcontracts and purchase orders.

3. In case of such termination for CITY's convenience, CONTRACTOR will be entitled to receive payment for work executed; and costs incurred by reason of such termination, along with reasonable overhead and profit on the work not executed.

B. Termination for Cause.

1. If either party fails to perform any term, covenant or condition in this Agreement and that failure continues for 15 calendar days after the nondefaulting party gives the defaulting party notice of the failure to perform, this Agreement may be terminated for cause; provided, however, that if during the notice period the defaulting party has promptly commenced and continues diligent efforts to remedy the default, the defaulting party will have such additional time as is reasonably necessary to remedy the default.

2. In the event this Agreement is terminated for cause by the default of the CONTRACTOR, the CITY may, at the expense of the CONTRACTOR and its surety, complete this Agreement or cause it to be completed. Any check or bond delivered to the CITY in connection with this Agreement, and the money payable thereon, will be forfeited to and remain the property of the CITY. All moneys due the CONTRACTOR under the terms of this

Agreement will be retained by the CITY, but the retention will not release the CONTRACTOR and its surety from liability for the default. Under these circumstances, however, the CONTRACTOR and its surety will be credited with the amount of money retained, toward any amount by which the cost of completion exceeds the Agreement Sum and any amount authorized for extra services.

3. Termination for cause will not affect or terminate any of the rights of the CITY as against the CONTRACTOR or its surety then existing, or which may thereafter accrue because of the default; this provision is in addition to all other rights and remedies available to the CITY under law.

C. Termination for Breach of Law.

In the event the CONTRACTOR or any of its officers, directors, shareholders, employees, agents, subsidiaries or affiliates is convicted (i) of a criminal offense as an incident to obtaining or attempting to obtain a public or private contract or subcontract, or in the performance of a contract or subcontract; (ii) under state or federal statutes of embezzlement, theft, forgery, bribery, falsification or destruction of records, receiving stolen property, or any other offense indicating a lack of business integrity or business honesty which currently, seriously, and directly affects responsibility as a public consultant or contractor; (iii) under state or federal antitrust statutes arising out of the submission of bids or proposals; or (iv) of violation of Paragraph 19 of this Agreement; or for any other cause the CITY determines to be so serious and compelling as to affect CONTRACTOR's responsibility as a public consultant or contractor, including but not limited to, debarment by another governmental agency, then the CITY reserves the unilateral right to terminate this Agreement or to impose such other sanctions (which may include financial sanctions, temporary suspensions or any other condition deemed appropriate short of termination) as it deems proper. The CITY will not take action until CONTRACTOR has been given notice and an opportunity to present evidence in mitigation.

5. FORCE MAJEURE

If any party fails to perform its obligations because of strikes, lockouts, labor disputes, embargoes, acts of God, inability to obtain labor or materials or reasonable substitutes for labor or materials, governmental restrictions, governmental regulations, governmental controls, judicial orders, enemy or hostile governmental action, civil commotion, fire or other casualty, or other causes beyond the reasonable control of the party obligated to perform, then that party's performance shall be excused for a period equal to the period of such cause for failure to perform.

6. RETENTION OF FUNDS

CONTRACTOR authorizes the CITY to deduct from any amount payable to CONTRACTOR (whether or not arising out of this Agreement) any amounts the payment of which may be in dispute or that are necessary to compensate the CITY for any losses, costs, liabilities, or damages suffered by the CITY, and all amounts for which the CITY may be liable to third parties, by reason of CONTRACTOR's negligent acts or omissions or willful misconduct in performing or failing to perform CONTRACTOR's obligations under this Agreement. In the event that any claim is made by a third party, the amount or validity of which is disputed by CONTRACTOR, or any indebtedness exists that appears to be the basis for a claim of lien, the CITY may withhold from any payment due, without liability for interest because of the withholding, an amount sufficient to cover the claim. The failure of the CITY to exercise the right to deduct or to withhold will not, however, affect the obligations of CONTRACTOR to insure, indemnify, and protect the CITY as elsewhere provided in this Agreement.

7. THE CITY'S REPRESENTATIVE

The Public Works Director is designated as the "City Representative," authorized to act in its behalf with respect to the work and services specified in this Agreement and to make all decisions in connection with this Agreement. Whenever approval, directions, or other actions are required by the CITY under this Agreement, those actions will be taken by the City Representative, unless otherwise stated. The City Manager has the right to designate another City Representative at any time, by providing notice to CONTRACTOR.

8. CONTRACTOR REPRESENTATIVE(S)

The following principal(s) of CONTRACTOR are designated as being the principal(s) and representative(s) of CONTRACTOR authorized to act in its behalf with respect to the work specified in this Agreement and make all decisions in connection with this Agreement:

REPRESENTATIVE 1
REPRESENTATIVE 2

9. INDEPENDENT CONTRACTOR

The CONTRACTOR is, and at all times will remain as to the CITY, a wholly independent contractor. Neither the CITY nor any of its agents will have control over the conduct of the CONTRACTOR or any of the CONTRACTOR's employees, except as otherwise set forth in this Agreement. The CONTRACTOR may not, at any time or in any manner,

represent that it or any of its agents or employees are in any manner agents or employees of the CITY. CITY has no duty, obligation, or responsibility to CONTRACTOR's agents or employees under the Affordable Care Act. CONTRACTOR is solely responsible for any tax penalties associated with the failure to offer affordable coverage to its agents and employees under the Affordable Care Act and any other liabilities, claims and obligations regarding compliance with the Affordable Care Act with respect to CONTRACTOR's agents and employees. CITY is not responsible and shall not be held liable for CONTRACTOR's failure to comply with CONTRACTOR's duties, obligations, and responsibilities under the Affordable Care Act. CONTRACTOR agrees to defend, indemnify and hold CITY harmless for any and all taxes and penalties that may be assessed against CITY as a result of CONTRACTOR's obligations under the Affordable Care Act relating to CONTRACTOR's agents and employees.

10. BUSINESS LICENSE

The CONTRACTOR must obtain a City business license prior to the start of work under this Agreement, unless CONTRACTOR is qualified for an exemption.

11. OTHER LICENSES AND PERMITS

CONTRACTOR warrants that it has all professional, contracting and other permits and licenses required to undertake the work contemplated by this Agreement.

12. FAMILIARITY WITH WORK

By executing this Agreement, CONTRACTOR warrants that CONTRACTOR (a) has thoroughly investigated and considered the scope of services to be performed, (b) has carefully considered how the services should be performed, and (c) fully understands the facilities, difficulties and restrictions attending performance of the services under this Agreement. If the services involve work upon any site, CONTRACTOR warrants that CONTRACTOR has or will investigate the site and is or will be fully acquainted with the conditions there existing, prior to commencement of services set forth in this Agreement.
Should CONTRACTOR discover any latent or unknown conditions that will materially affect the performance of the services set forth in this Agreement, CONTRACTOR must immediately inform the CITY of that fact and may not proceed except at CONTRACTOR's risk until written instructions are received from the CITY.

13. CARE OF WORK

CONTRACTOR must adopt reasonable methods during the life of the Agreement to furnish continuous protection to the work, and the equipment, materials, papers, documents, plans, studies and other components to prevent losses or damages, and will be responsible for all damages, to persons or property, until acceptance of the work by the CITY, except those losses or damages as may be caused by the CITY's own negligence.

14. CONTRACTOR'S ACCOUNTING RECORDS; OTHER PROJECT RECORDS

Records of the CONTRACTOR's time pertaining to the project, and records of accounts between the CITY and the CONTRACTOR, will be kept on a generally recognized accounting basis. CONTRACTOR will also maintain all other records, including without limitation specifications, drawings, progress reports and the like, relating to the project. All records will be available to the CITY during normal working hours. CONTRACTOR will maintain these records for three years after final payment.

15. PREVAILING WAGE

All Services rendered pursuant to this agreement must be provided in accordance with all ordinances, resolutions, statutes, rules, regulations, and laws of City and any Federal, State, or local governmental agency of competent jurisdiction. Contractor is aware of the requirements of California Labor Code Sections 1720, et seq., and 1770, et seq., as well as of California Code of Regulations, Title 8, Sections 1600, et seq., (collectively, the "Prevailing Wage Laws"), which require the payment of prevailing wage rates and the performance of other requirements on "Public works" and "Maintenance" projects. If the Services are being performed as part of an applicable "Public works" or "Maintenance" project, as defined by the Prevailing Wage Laws, and if the total compensation is ONE THOUSAND DOLLARS ($1,000) or more, Contractor agrees to fully comply with the Prevailing Wage Laws including, but not limited to, requirements related to the maintenance of payroll records and the employment of apprentices.

Pursuant to California Labor Code Section 1725.5, no contractor or subcontractor may be awarded a contract for public work on a "Public works" project unless registered with the California Department of Industrial Relations ("DIR") at the time the contract is awarded. If the Services are being performed as part of an applicable "Public works" or "Maintenance" project, as defined by the Prevailing Wage Laws, this project is subject to compliance monitoring and enforcement by the California Department of Industrial Relations ("DIR"). Contractor will

maintain and will require all subcontractors to maintain valid and current DIR Public Works Contractor registration during the term of this Agreement. Contractor must notify City in writing immediately, and in no case more than twenty-four (24) hours, after receiving any information that Contractor's or any of its subcontractor's DIR registration status has been suspended, revoked, expired, or otherwise changed.

It is understood that it is the responsibility of Contractor to determine the correct salary scale. Contractor will make copies of the prevailing rates of per diem wages for each craft, classification, or type of worker needed to execute the Services available to interested parties upon request, and post copies at Contractor's principal place of business and at the project site, if any. The statutory penalties for failure to pay prevailing wage or to comply with State wage and hour laws will be enforced. Contractor must forfeit to City TWENTY FIVE DOLLARS ($25.00) per day for each worker who works in excess of the minimum working hours when Contractor does not pay overtime. In accordance with the provisions of Labor Code Sections 1810 et seq., eight (8) hours is the legal working day.

Contractor must also comply with State law requirements to maintain payroll records and must provide for certified records and inspection of records as required by California Labor Code Section 1770 et seq., including Section 1776. Contractor will defend (with counsel selected by City), indemnify, and hold City, its elected officials, officers, employees, and agents free and harmless from any claim or liability arising out of any failure or alleged failure to comply with the Prevailing Wage Laws. It is agreed by the parties that, in connection with performance of the Services, including, without limitation, any and all "Public works" (as defined by the Prevailing Wage Laws), Contractor will bear all risks of payment or non-payment of prevailing wages under California law and/or the implementation of Labor Code Section 1781, as the same may be amended from time to time, and/or any other similar law. Contractor acknowledges and agrees that it will be independently responsible for reviewing the applicable laws and regulations and effectuating compliance with those laws. Contractor will require the same of all subcontractors.

16. INDEMNIFICATION

CONTRACTOR will indemnify, defend, and hold harmless CITY, the Successor Agency to the Former Redevelopment Agency of the City of Torrance, the City Council, each member thereof, present and future, its officers, agents and employees from and against any and all liability, expenses, including defense costs and legal fees, and claims for damages whatsoever, including, but not limited to, those arising from breach of contract, bodily injury, death, personal injury, property damage, loss of use, or property loss however the same may be caused and regardless of the responsibility for negligence. The obligation to indemnify, defend and hold harmless includes, but is not limited to, any liability or expense,

including defense costs and legal fees, arising from the negligent acts or omissions, or willful misconduct of CONTRACTOR, its officers, employees, agents, subcontractors or vendors. It is further agreed, CONTRACTOR's obligations to indemnify, defend and hold harmless will apply even in the event of concurrent negligence on the part of CITY, the City Council, each member thereof, present and future, or its officers, agents and employees, except for liability resulting solely from the negligence or willful misconduct of CITY, its officers, employees or agents. Payment by CITY is not a condition precedent to enforcement of this indemnity. In the event of any dispute between CONTRACTOR and CITY, as to whether liability arises from the sole negligence of the CITY or its officers, employees, agents, subcontractors or vendors, CONTRACTOR will be obligated to pay for CITY's defense until such time as a final judgment has been entered adjudicating the CITY as solely negligent. CONTRACTOR will not be entitled in the event of such a determination to any reimbursement of defense costs including but not limited to attorney's fees, expert fees and costs of litigation.

17. NON-LIABILITY OF THE CITY'S OFFICERS AND EMPLOYEES

No officer or employee of the CITY will be personally liable to CONTRACTOR, in the event of any default or breach by the CITY or for any amount that may become due to CONTRACTOR.

18. INSURANCE

A. CONTRACTOR must maintain at its sole expense the following insurance, which will be full coverage not subject to self-insurance provisions:

1. Automobile Liability, including owned, non-owned and hired vehicles, with at least the following limits of liability:

   a. Combined single limits of $2,000,000 per occurrence.

2. General Liability including coverage for premises, products and completed operations, independent contractors, personal injury and contractual obligations with combined single limits of coverage of at least $3,000,000 per occurrence, with an annual aggregate of no less than $5,000,000.

3. Workers' Compensation with limits as required by the State of California and Employers Liability with limits of at least $1,000,000.

B. The insurance provided by CONTRACTOR will be primary and non-contributory.

C. CITY, the Successor Agency to the Former Redevelopment Agency of the City of Torrance, the City Council and each member thereof, members of boards and commissions, every officer, agent, official, employee and volunteer must be named as additional insureds under the automobile and general liability policies.

D. CONTRACTOR must provide certificates of insurance and/or endorsements to the City Clerk of the City of Torrance before the commencement of work.

E. Each insurance policy required by this Paragraph must contain a provision that no termination, cancellation or change of coverage can be made without thirty days notice to the CITY.

F. CONTRACTOR must include all subcontractors as insureds under its policies or must furnish separate certificates and endorsements for each subcontractor. All coverage for subcontractors will be subject to all of the requirements of this Paragraph 17.

19. SUFFICIENCY OF INSURERS

Insurance required by this Agreement will be satisfactory only if issued by companies admitted to do business in California, rated “B+” or better in the most recent edition of Best’s Key Rating Guide, and only if they are of a financial category Class VII or better, unless these requirements are waived by the Risk Manager of the CITY (“Risk Manager”) due to unique circumstances. In the event the Risk Manager determines that the work or services to be performed under this Agreement creates an increased or decreased risk of loss to the CITY, the CONTRACTOR agrees that the minimum limits of any insurance policies and/or the performance bond required by this Agreement may be changed accordingly upon receipt of written notice from the Risk Manager; provided that CONTRACTOR will have the right to appeal a determination of increased coverage by the Risk Manager to the City Council of the CITY within 10 days of receipt of notice from the Risk Manager.

20. CONFLICT OF INTEREST

A. No officer or employee of the CITY may have any financial interest, direct or indirect, in this Agreement, nor may any officer or employee participate in any decision relating to the Agreement that effects the officer or employee’s financial interest or the financial interest of any corporation, partnership or association in which the officer or employee is, directly or indirectly interested, in violation of any law, rule or regulation.

B. No person may offer, give, or agree to give any officer or employee or former officer or employee, nor may any officer or employee solicit, demand, accept, or agree to accept from another person, a gratuity or an offer of employment in connection with any decision, approval, disapproval, recommendation, preparation or any part of a program requirement or a purchase request, influencing the content of any specification or procurement standard, rendering of advice, investigation, auditing, or in any other advisory capacity in any way pertaining to any program requirement, contract or subcontract, or to any solicitation or proposal.

21. NOTICE

A. All notices, requests, demands, or other communications under this Agreement will be in writing. Notice will be sufficiently given for all purposes as follows:

1. Personal delivery. When personally delivered to the recipient: notice is effective on delivery.

2. First Class mail. When mailed first class to the last address of the recipient known to the party giving notice: notice is effective three mail delivery days after deposit in an United States Postal Service office or mailbox.

3. Certified mail. When mailed certified mail, return receipt requested: notice is effective on receipt, if delivery is confirmed by a return receipt.

4. Overnight delivery. When delivered by an overnight delivery service, charges prepaid or charged to the sender's account: notice is effective on delivery, if delivery is confirmed by the delivery service.

5. Facsimile transmission. When sent by fax to the last fax number of the recipient known to the party giving notice: notice is effective on receipt. Any notice given by fax will be deemed received on the next business day if it is received after 5:00 p.m. (recipient's time) or on a non-business day.

6. Addresses for purpose of giving notice are as follows:

CONTRACTOR:	CONTRACTOR'S NAME AND ADDRESS
	Fax: INSERT FAX NUMBER

CITY:	City Clerk City of Torrance 3031 Torrance Boulevard Torrance, CA 90509-2970 Fax: (310) 618-2931
with a copy to:	Attn: PROJECT MANAGER'S NAME Public Works Department City of Torrance 20500 Madrona Avenue Torrance, CA 90503 Fax: (310) 781-6902

B. Any correctly addressed notice that is refused, unclaimed, or undeliverable because of an act or omission of the party to be notified, will be deemed effective as of the first date the notice was refused, unclaimed or deemed undeliverable by the postal authorities, messenger or overnight delivery service.

C. Either party may change its address or fax number by giving the other party notice of the change in any manner permitted by this Agreement.

22. PROHIBITION AGAINST ASSIGNMENT AND SUBCONTRACTING

This Agreement and all exhibits are binding on the heirs, successors, and assigns of the parties. The Agreement may not be assigned or subcontracted by either the CITY or CONTRACTOR without the prior written consent of the other.

23. INTEGRATION; AMENDMENT

This Agreement represents the entire understanding of the CITY and CONTRACTOR as to those matters contained in it. No prior oral or written understanding will be of any force or effect with respect to the terms of this Agreement. The Agreement may not be modified or altered except in writing signed by both parties.

24. INTERPRETATION

The terms of this Agreement should be construed in accordance with the meaning of the language used and should not be construed for or against either party by reason of the authorship of this Agreement or any other rule of construction that might otherwise apply.

25. SEVERABILITY

If any part of this Agreement is found to be in conflict with applicable laws, that part will be inoperative, null and void insofar as it is in conflict with any applicable laws, but the remainder of the Agreement will remain in full force and effect.

26. TIME OF ESSENCE

Time is of the essence in the performance of this Agreement.

27. GOVERNING LAW; JURISDICTION

This Agreement will be administered and interpreted under the laws of the State of California. Jurisdiction of any litigation arising from the Agreement will be in Los Angeles County, California.

28. COMPLIANCE WITH STATUTES AND REGULATIONS

CONTRACTOR will be knowledgeable of and will comply with all applicable federal, state, county and city statutes, rules, regulations, ordinances and orders.

29. WAIVER OF BREACH

No delay or omission in the exercise of any right or remedy by a nondefaulting party on any default will impair the right or remedy or be construed as a waiver. A party's consent or approval of any act by the other party requiring the party's consent or approval will not be deemed to waive or render unnecessary the other party's consent to or approval of any subsequent act. Any waiver by either party of any default must be in writing and will not be a waiver of any other default concerning the same or any other provision of this Agreement.

30. ATTORNEY'S FEES

Except as provided for in Paragraph 15, in any dispute, litigation, arbitration, or other proceeding by which one party either seeks to enforce its rights under this Agreement (whether in contract, tort or both) or seeks a declaration of any rights or obligations under this Agreement, the prevailing party will be awarded reasonable attorney's fees, together with any costs and expenses, to resolve the dispute and to enforce any judgment.

31. EXHIBITS

All exhibits identified in this Agreement are incorporated into the Agreement by this reference.

32. CONTRACTOR'S AUTHORITY TO EXECUTE

The persons executing this Agreement on behalf of the CONTRACTOR warrant that (i) the CONTRACTOR is duly organized and existing; (ii) they are duly authorized to execute this Agreement on behalf of the CONTRACTOR; (iii) by so executing this Agreement, the CONTRACTOR is formally bound to the provisions of this Agreement; and (iv) the entering into this Agreement does not violate any provision of any other Agreement to which the CONTRACTOR is bound.

City of Torrance,
a municipal corporation

_____
Patrick J. Furey, Mayor

ATTEST:

_____
Rebecca Poirier, MMC
City Clerk

APPROVED AS TO FORM:

JOHN L. FELLOWS III
City Attorney

By: _____

BUSINESS OR INDIVIDUAL NAME
TYPE OF ENTITY

By: _____
SIGNER, TITLE

Attachment: Exhibit A: Bid
Revised: 11/17/15

EXHIBIT A

Bid

APPENDIX II

CITY OF TORRANCE PERMIT AND BUSINESS LICENSE

City of Torrance, Community Development Department

Permit Application Form

3031 TORRANCE BLVD. • TORRANCE, CA 90503

OWNER/APPLICANT INFORMATION

Name: _____

Address: _____

City/State: _____

Zip: _____

Phone: _____

Evacuation permits will not be issued without USA I.D. number.

Underground Service Alert
Call 1-800/227-2600

USA I.D.#: _____

CONTRACTOR INFORMATION ON FILE

_____

_____

_____

_____

_____

State License #: _____

Class: _____ Exp. Date: _____

City Business#: _____

Workers Comp. #: _____

Exp. Date: _____

JOB LOCATION/ADDRESS

(or closest street address)

Please list cross streets: _____

_____

DESCRIPTION OF WORK

_____

_____

Lin/Ft Trench _____ Width of Trench _____ Lin/Ft Curb & Gutter _____

Lin/Ft Bore _____ Sewer Connection _____ Number of Curb Drains _____

Sq/Ft Asphalt _____ Sq/Ft Concrete _____ Sq/Ft Dirt _____

Work Order Number *(for utility companies)*: _____

Applicant or Authorized Signature: _____

For further permit information, please call 310/618-5898 or Fax 310/618-2846.

Contractor Qualification List

Curb/Gutter ..... A(General Engineering)
C8(Concrete Contractor)

Driveways ..... A(General Engineering)
C8(Concrete Contractor)

Sidewalks ..... A(General Engineering)
B(General Building)
C8(Concrete Contractor)

Street/Alley ..... A(General Engineering)
C8(Concrete Contractor)
C12(Earth and Paving Contractor)

Sewer Lateral ..... A (General Engineering)
C34(Pipeline Contractor)
C42(Sanitation Contractor)

Sewer Mainline ..... A(General Engineering)
C34(Pipeline Contractor)
C42(Sanitation Contractor)

Storm Drains ..... A(General Engineering)
C34(Pipeline Contractor)
C42(Sanitation Contractor)

U/G Utilities ..... A (General Engineering)
(Water, Gas or Oil) C34 (Pipeline Contractor)

U/G Electrical ..... A (General Engineering)
C8 (Concrete Contractor)
C12 (Earth and Paving Contractors)

Contractor Qualification List

1) FOR INSPECTIONS 24 hour notice is required, before, during, and after construction. Call 310-618-5898, 7:30 AM – 5:30 PM, to SCHEDULE AN INSEPCTION.

2) Provide TRAFFIC CONTROL per the "CITY OF TORRANCE CONSTRUCTION TRAFFIC CONTROL PROCEDURES." Street closures shall be per City of Torrance Standard T603. Major street lane closures between 8:30 AM – 3:30 PM only. ONE STANDARD ARROWBOARD REQUIRED FOR EACH LANE CLOSURE.

3) Permitt is not valid until two working days after notifying DIG-ALERT of project. USA # _____ .

4) Do not remove any trees or shrubs without approval of Torrance Tree Supervisor (310-781-6900).

5) Contractor will be billed for overtime inspection services. OVERTIME REQUESTS must be submitted for approval 24 hrs in advance.

6) Construction site CLEANUP and GRAFFITI removal must be completed prior to finaling of this permit. The work site shall be kept in a well maintained condition. Signage shall be free of graffiti, replaced if bent, vandalized or displays loss of reflectivity. Any graffiti on construction signs must be removed or replaced within 24 hours of notification.

7) Any street striping, crosswalk, raised reflective pavement marker or pavement markings damaged by this construction shall be replaced to the satisfaction of the Torrance Public Works Department (310-781-6900).

8) THIS PERMIT WILL BE REVOKED if any pollutant is released into or allowed to remain in any component of the city drainage system.

9) Trench backfill and pavement repairs shall be per City of Torrance Standard T116.

10) Any irrigation system components damaged by this construction shall be replaced to the satisfaction of Park Services (310-618-2930).

11) All survey monuments in the project area MUST be located and tied out and a Corner Record filed prior to the start of construction. Also, all destroyed monuments must be replaced prior to receiving final inspection.

12) It is the responsibility of the contractor to REPLACE any PAVEMENT removed by this construction.

13) The City of Torrance is held harmless from the results of any action or accidents caused by the permittee, his employees, or equipment in the performance of the work described or covered in this permit. Validation of this permit SHALL NOT be held to permit or to be an approval of the violation of any applicable provision of the City Code covering this work, or any other provisions of the City of Torrance Code. In the granting of a Construction & Excavation permit, the Community Development Director may impose such conditions thereon, in addition to those otherwise provided herein, as are reasonably necessary to prevent the proposed operations from being conducted in such a manner as to constitute or create a HAZARD TO LIFE or property or be detrimental to property.

8/11/03

CITY OF TORRANCE
COMMUNITY DEVELOPMENT DEPARTMENT/
ENGINEERING DIVISION

PERMIT APPLICATION FORM
INSURANCE REQUIREMENTS

Any entity performing work on City streets, right-of-way, and property must comply with the following requirements.

1. TYPE OF INSURANCE

Any entity performing work must maintain at their sole expense the following insurance, which shall be full coverage not subject to self-insurance provisions.

- General Liability including coverage for premises, products and completed operations, underground hazards, independent contractors, personal injury and contractual obligations with combined single limits of at least $1,000,000 per occurrence.

- Automobile Liability, including owned, non-owned and hired vehicles, with at least the following limits of liability:

  - Primary Bodily Injury with limits of at least $500,000 per person, $1,000,000 per occurrence AND; Primary Property Damage with limits of at least $500,000per occurrence, OR

  - Combined single limits of at least $1,000,000 per occurrence.

- Workers' Compensation with limits as required by the State of California and Employer's Liability with limits of at least $1,000,000.

2. CERTIFICATES

- Certificates or an attached endorsement must be provided that contains the following provisions:

  - The City of Torrance, the City Council and each member thereof, members of boards and commissions, every officer, agent, official, employee and volunteer must be named as additional insured under the automobile and general liability policies.

  - The insurance policies required by this clause shall contain a provision that no termination, cancellation or change of coverage can be made without 30 days written notice to the City.

3. FILING REQUIREMENTS

- Certificates of insurance and/or endorsements must be provided to the Community Development Department, Permits and Records Section, 3031 Torrance Blvd., Torrance, CA 90503, prior to the issuance of the permit.

4. ADDITIONAL REQUIREMENT

- Insurance required of any entity performing work will be satisfactory only if issued by companies rated "B+" or better in the most recent edition of Best's Key Rating Guide, and only if they are of a financial category of a VII or better, unless these requirements are modified or waived by the City's Risk Manager.

NOTICE
CITY OF TORRANCE
COMMUNITY DEVELOPMENT DEPARTMENT/
ENGINEERING DIVISION
NEW INSURANCE REGULATIONS

The City of Torrance Community Development Department/Engineering Division will be requiring proof of liability insurance from each contractor applying for a Construction & Excavation permit to work in the public right-of-way or in a public easement beginning October 1, 2001. Insurance shall cover contractor and vehicles used in the construction. The attached requirements dated September 20, 2001 will detail the insurance limits.

All insurance certificates shall have an additional clause that states: ***"The City of Torrance, the City Council and each member thereof, members of boards and commissions, every officer, agent, official, employee and volunteer"*** as additional insured.

Contractors should bring in proof of insurance at the time of application for permit. For major companies that are self-insured, a letter stating this fact and signed by an officer of the firm will be acceptable. Annual insurance may also be kept on file for contractors working periodically within the City of Torrance.

If you have any questions, please contact the Engineering Division Permit Counter at 310-618-5898.

JEFFERY W. GIBSON
Community Development Director
City of Torrance

EFFECTIVE 8/11/03

Please call the Business License Office at 310-618-5923 for fee amounts. Payment must be submitted with your application.

FOR OFFICIAL USE ONLY

1. LICENSE NO. | 2. CATEGORY NO.

HOME OCCUPATION | HEALTH PERMIT | S.I.C. CODE

City of Torrance, Revenue Division

Business License Application

3031 Torrance Boulevard, Torrance, California 90503 • 310/618-5828

PART I. APPLICANT TO ANSWER ALL QUESTIONS IN THIS SECTION (print or type)

3. BUSINESS NAME OR DBA | 4. CORPORATE NAME (IF DIFFERENT FROM ABOVE)

5. BUSINESS ADDRESS | SUITE # | CITY | STATE | ZIP

6. MAILING ADDRESS | SUITE # | CITY | STATE | ZIP

7. NATURE OF BUSINESS (state type of business being conducted at this location) | 8. NO. OF PERSONS WORKING AT LOCATION | 9. BUSINESS PHONE

10. NAME OF PERSON MAKING APPLICATION (must be an owner, partner or corporate officer) | 11. TITLE | 12. HOME PHONE

13. RESIDENCE ADDRESS | CITY | STATE | ZIP | 14. DRIVER'S LICENSE NO. | 15. STATE SALES TAX NO.

16. STATE CONTRACTOR'S LICENSE NO. | 17. SQUARE FOOTAGE | 18. SOCIAL SECURITY NO. | 19. FEIN NO. | 20. SEIN NO.

21. OWNERSHIP INFORMATION ☐ PARTNERSHIP ☐ CORPORATION ☐ SOLE OWNERSHIP

NAMES OF OWNER, PARTNERS, OR PRINCIPAL OFFICERS	TITLE	HOME ADDRESS	HOME PHONE

I declare that I am the owner, partner, corporate officer or person with the power of attorney, and I understand if all the information provided above is not the true the business license being applied for may be revoked as outlined in section 31.910 of the Torrance Municipal Code.

I am duly authorized to make this application and all of the information provided in this application is true and correct. The business will not provide any service, good or product which is illegal under Federal, State, or Local Laws. I declare under penalty of perjury that the foregoing is true and correct.

SIGNATURE _____ DATE _____

PART II. FOR OFFICIAL USE ONLY

BASIC FEE | APPLICATION SENT FOR ZONING? ☐ YES ☐ NO | PROCESSING FEE | FIRE INSP. FEE | OTHER

PER PERSON FEE | OTHER (cont'd)

PENALTY FEE | HOLD ☐ YES ☐ NO | ENT. FEE | DANCE/ANIO FEE

RECEIVED BY | DATE | CHECK NO. | BANK NO. | CASH | TOTAL AMOUNT $

This form can be printed from our website at http://www.torrnet.com/416.htm.

APPENDIX III

CITY OF TORRANCE STANDARD PLANS

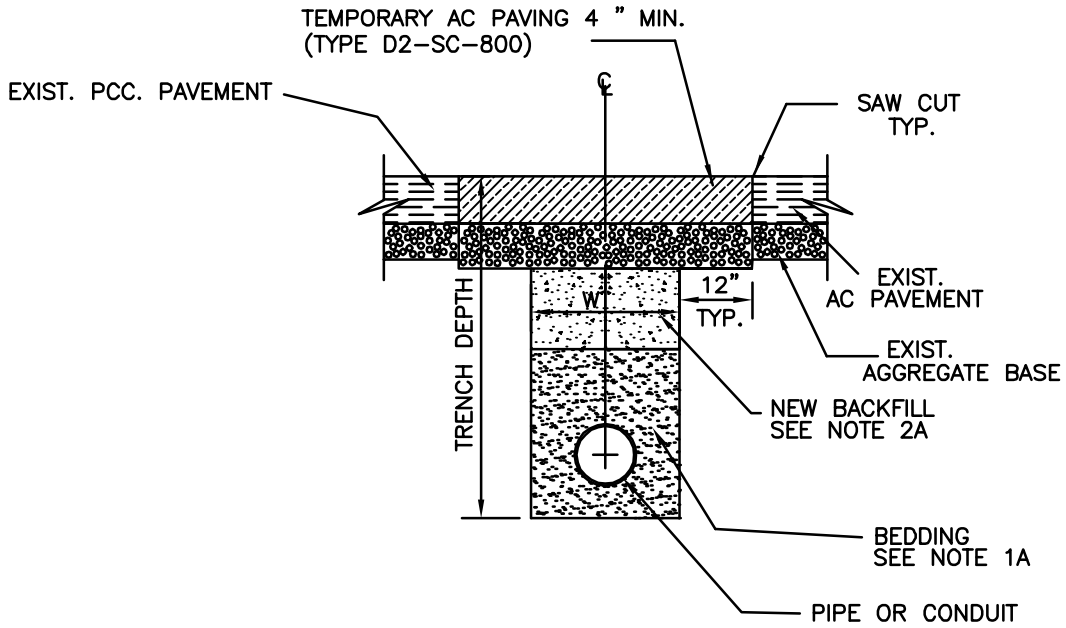

TEMPORARY ASPHALT REPAIR

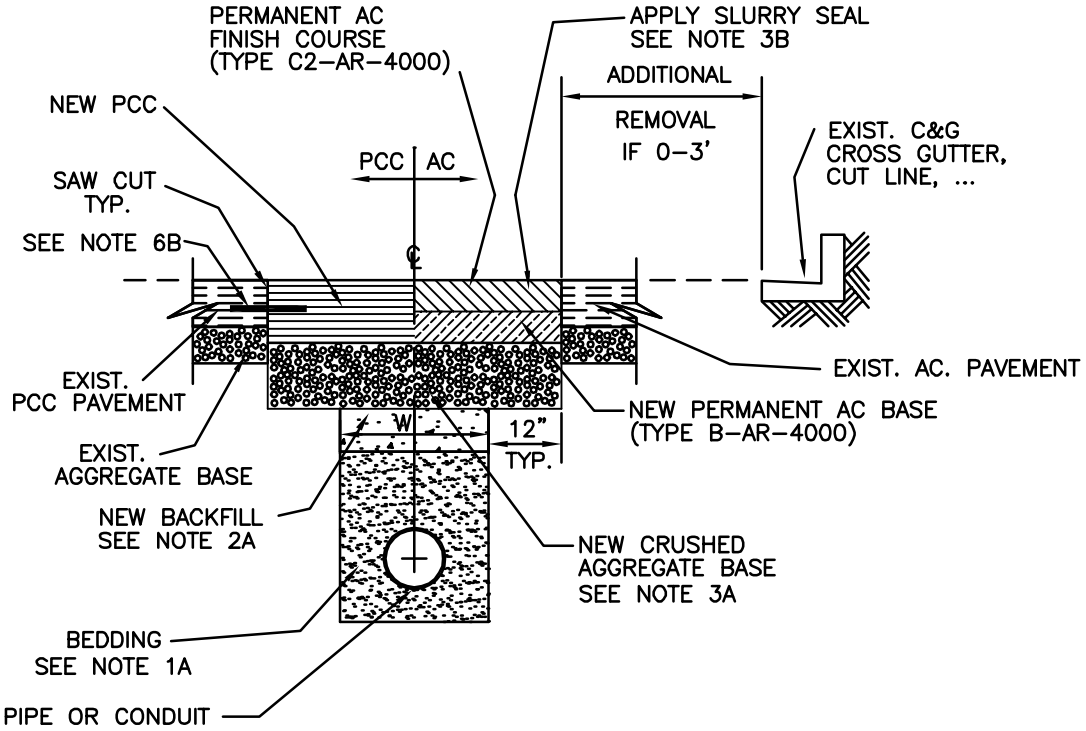

PERMANENT TRENCH REPAIR

TYPICAL TRENCH SECTION WITHIN ROADWAY

(SEE NOTE 8C FOR EXCEPTION)

CITY OF TORRANCE - ENGINEERING DEPARTMENT

DATE ISSUED	TRENCH BACKFILL & PAVEMENT REPAIRS	STANDARD NO.
10 SEP 2002	RICHARD W. BURTT ENGINEERING DIRECTOR R.C.E. NO. 32862 R.T.E. NO. 1538	T116-2
		SHEET 1 OF 4

TT\T116-2

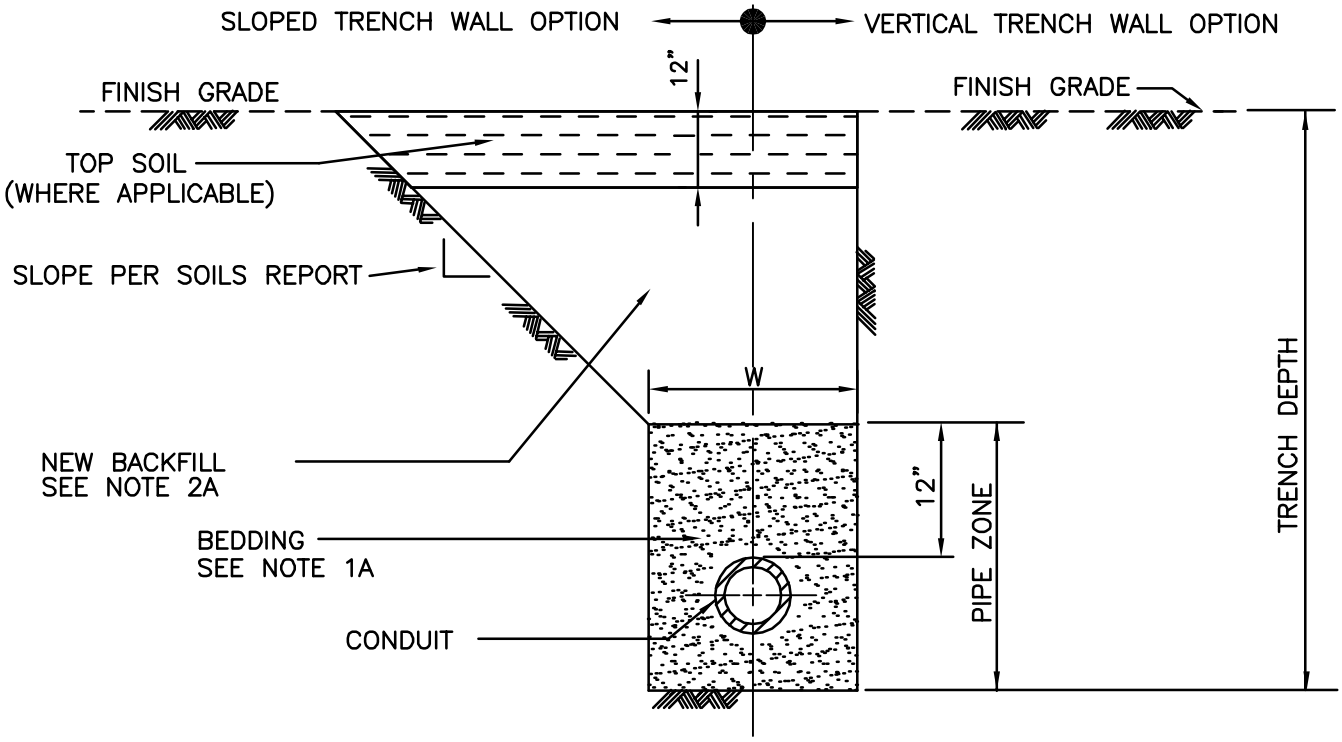

TYPICAL TRENCH SECTION OUTSIDE ROADWAY

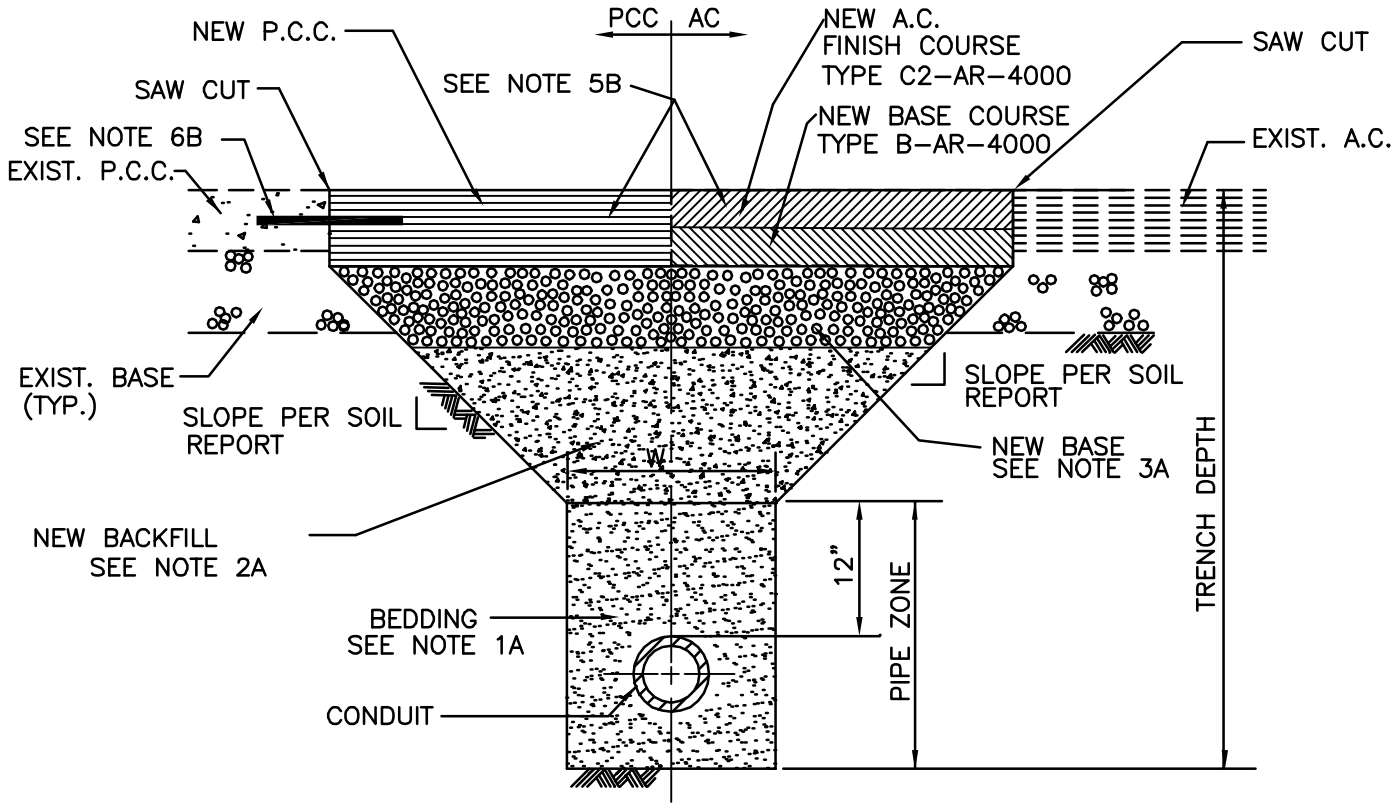

TYPICAL TRENCH SECTION WITHIN ROADWAY
SLOPED TRENCH WALL OPTION

CITY OF TORRANCE - ENGINEERING DEPARTMENT

DATE ISSUED	TRENCH BACKFILL & PAVEMENT REPAIRS	STANDARD NO.
10 SEP 2002	RICHARD W. BURTT ENGINEERING DIRECTOR R.C.E. NO. 32862 R.T.E. NO. 1538	T116-2
		SHEET 2 OF 4

TT\T116-2

NOTES:

BELOW GROUND:

1A. SEE STD. PLAN NO'S T204, T302, AND T701 FOR BEDDING REQUIREMENTS.

2A. FOR TRENCHES WITH "W" GREATER THAN 2' OR IF TRENCH WALLS ARE SLOPED, BACKFILL SHALL BE CRUSHED AGGREGATE BASE, OR NATIVE OR OTHER EXCAVATION MATERIAL WITH AN SE VALUE OF 30 OR GREATER. BACKFILL MATERIAL SHALL BE DENSIFIED TO A RELATIVE COMPACTION OF 95% IN THE UPPER 3 FEET AND TO 90% BELOW THE UPPER 3 FEET. FOR TRENCHES LONGER THAN 200' OR LARGER THAN 1,000 SQUARE FEET A LICENSED SOILS ENGINEER SHALL BE PRESENT TO MONITOR THE NATIVE OR IMPORTED BACKFILL OPERATION AND TEST FOR COMPACTION AT 100' OR 200 SQUARE FOOT MAXIMUM INTERVALS

FOR TRENCHES WITH "W" LESS THAN OR EQUAL TO 2' IN THE ROADWAY, A SAND-CEMENT SLURRY (100-E-100) BACKFILL SHALL BE USED. SLURRY SHALL CURE 16 HOURS MINIMUM PRIOR TO BASE PLACEMENT. RAPID SET CEMENT SLURRY SHALL CURE 1 HOUR MINIMUM PRIOR TO BASE PLACEMENT.

IN AREAS NOT IN EXISTING ROADWAY, BACKFILL SHALL BE COMPACTED TO A RELATIVE COMPACTION OF 90%.

3A. NEW CRUSHED AGGREGATE BASE SHALL BE 2" THICKER THAN EXISTING BASE, BUT NOT LESS THAN 8" THICK.

4A. EXCAVATED MATERIAL NOT APPROVED FOR USE IN TRENCH BACKFILL SHALL BE REMOVED FROM JOB SITE UNLESS OTHERWISE USED IN THE WORK.

5A. WHERE WET, UNSTABLE OR RUNNING SOIL IS ENCOUNTERED, SOLID SHEATHING IS REQUIRED FOR ALL VERTICAL TRENCH WALLS.

6A. ANY SHORING REQUIRED SHALL BE DESIGNED BY A REGISTERED CIVIL OR STRUCTURAL ENGINEER.

7A. "W" SHALL BE MEASURED AT TOP OF BEDDING.

VISIBLE SURFACE:

1B. IF REMAINING AC PAVEMENT BETWEEN EDGE OF TRENCH AND EXISTING GUTTER, CURB, CROSS GUTTER, OR CUT LINE IS LESS THAN 3 FEET IN WIDTH, THEN THIS AC SHALL BE REMOVED AND REPLACED WITH NEW AC PAVEMENT.

2B. THE ENGINEER MAY REQUIRE WIDER REMOVAL AREA THAN THAN THAT SHOWN ABOVE TO SUIT FIELD CONDITIONS.

3B. CRACKS SHALL BE SEALED AND A TYPE 2 SLURRY SEAL COATING WITH 2% LATEX SHALL BE APPLIED FROM LANE LINE TO LANE LINE FOR LONGITUDINAL TRENCHES GREATER THAN 200' IN LENGTH FOR ANY LANE AFFECTED.

4B. THE THICKNESS OF REPLACEMENT ASPHALT SHALL BE A MINIMUM OF 1" GREATER THAN EXISTING AC (2" GREATER IF EXISTING STREET IS PAVED WITH RUBBERIZED AC) BUT NOT LESS THAN 4" (5" FOR RUBBERIZED AC). IF EXISTING PAVEMENT IS PCC, REPLACEMENT CONCRETE SHALL BE AS PER SECTION 201.1 OF THE STANDARD SPECS AND 1" THICKER THAN EXISTING.

5B. THE NEW FINISH COURSE SHALL BE PLACED FLUSH WITH THE EXISTING ADJACENT PAVING SURFACE – MAXIMUM VARIANCE FROM FLUSH IS 1/8". NEW AC PAVEMENT ADJACENT TO EXISTING EDGE OF PCC GUTTER SHALL BE 3/8" HIGHER THAN EDGE OF GUTTER.

6B. FOR PCC ROADWAY PAVEMENT, DOWEL AT 24" O.C., #4 DEFORMED BAR, 6" EMBEDMENT, AND CENTERED IN EXISTING SLAB WITH 1–1/2" MINIMUM CONCRETE COVER. DOWEL SHALL BE EPOXIED IN EXISTING SLAB AND CAST IN NEW SLAB.

METHODOLOGY:

1C. AT THE END OF EACH WORK DAY, ANY TRENCH IN AN ARTERIAL OR IN ROLLING HILLS ROAD, MAPLE/235TH ST. OR ARLINGTON AVE. SHALL BE COVERED BY NON–SKID STEEL PLATES OR BE PAVED WITH TEMPORARY OR PERMANENT PAVEMENT FLUSH WITH ADJACENT PAVEMENT SURFACES. WHEN NON–SKID STEEL PLATES ARE USED, THEY SHALL BE WELDED, SECURED IN PLACE, RAMPED WITH AC, AND NOT USED FOR MORE THAN 48 CONSECUTIVE HOURS ON THE SAME SEGMENT OF TRENCH. "PLATE AHEAD" SIGN SHALL BE PROPERLY INSTALLED WHEN PLATES ARE IN USE. OTHER CITY STREETS MAY HAVE LESSER REQUIREMENTS AND WILL BE CONSIDERED ON A CASE BY CASE BASIS.

2C. ALL TRAFFIC LANES SHALL BE CLEANED AND RESTORED FOR USE IMMEDIATELY UPON PLACEMENT OF TEMPORARY AC PAVEMENT, TRENCH PLATES AND/OR FINAL AC PAVEMENT.

3C. ALL TRAFFIC STRIPING AND/OR MARKINGS REMOVED OR DAMAGED DURING CONSTRUCTION SHALL BE REPLACED IN KIND AS DIRECTED BY THE ENGINEER.

4C. TRAFFIC CONTROL SHALL BE PER CITY OF TORRANCE "CONSTRUCTION TRAFFIC CONTROL PROCEDURES ON CITY STREETS" AVAILABLE FROM THE ENGINEERING DEPARTMENT PERMIT COUNTER.

5C. MORITORIUM FOR CUTTING NEW OR RECONSTRUCTED STREETS IS 5 YEARS WITHOUT SPECIAL APPROVAL FROM THE ENGINEERING DIRECTOR. NEW UTILITY SERVICE CONNECTIONS AND SERVICE LINE REPAIRS ARE EXCEPTED IF NOT ABLE TO BE FORSEEN AT THE TIME THE ROADWAY WAS RECONSTRUCTED. APPROVED LONGITUDINAL EXCAVATIONS IN NEW STREETS SHALL REQUIRE THE FULL LANE TO BE GROUND AND OVERLAID.

6C. SLURRY SEALING OF TRENCH AREA MAY BE OMITTED IF PROJECT IS COORDINATED WITHIN ONE YEAR OF A CITY STREET REHABILITATION OR SLURRY SEAL PROJECT.

7C. A COLLECTION DEVICE SHALL BE USED TO COLLECT SEDIMENTS GENERATED DURING SAWCUTTING OPERATION.

8C. TRENCHES WITH "W" LESS THAN 8" WIDE AND LESS THAN OR EQUAL TO 24" DEEP ARE NOT REQUIRED TO USE T–SECTION PAVEMENT CONSTRUCTION, OR APPLY SLURRY SEAL.

9C. ALL PAVEMENT REMOVALS SHALL USE STRAIGHT LINE SAW CUTS A MINIMUM OF 1.5" DEEP.

10C. BORING SHALL BE CONSIDERED AS A CONTINUOUS TRENCH AS FAR AS EXCAVATION REPAIR. POTHOLES LOCATED INTERMITTENTLY WILL NOT BE TREATED AS SEPARATE EXCAVATIONS BUT AS A CONTINUOUS EXCAVATION. THE CITY SHALL RESERVE THE RIGHT TO REQUIRE BORING OR OPEN TRENCH AS THE SITUATION MAY ARISE.

STORM DRAIN GENERAL NOTES

1. ALL WORK SHALL BE DONE IN ACCORDANCE WITH THE STANDARD SPECIFICATIONS FOR PUBLIC WORKS CONSTRUCTION, LATEST EDITION AND SUPPLEMENTS THEREO, AS WRITTEN AND PROMULGATED BY PUBLIC WORKS STANDARDS, INC., HEREINAFTER REFERRED TO AS THE STANDARD SPECIFICATIONS, THE TORRANCE STANDARDS, AND TO THE SATISFACTION OF THE COMMUNITY DEVELOPMENT OR PUBLIC WORKS DIRECTOR.

2. IT SHALL BE THE RESPONSIBILITY OF THE CONTRACTOR TO LOCATE, VERIFY DEPTH AND PROTECT ALL STRUCTURES, INCLUDING SUBSTRUCTURES, SHOWN ON THE PLAN. THE CONTRACTOR SHALL BEAR THE ENTIRE COST OF REPAIRING OR REPLACING ANY OF SAID STRUCTURES DAMAGED BY HIM/HER DURING PROSECUTION OF THE WORK. ALL REPAIRS AND REPLACEMENTS SHALL BE DONE IN THE PRESENCE OF THE INSPECTOR. ALL LOCATIONS SHOWN ON THE PLAN FOR UTILITY LINES HAVE BEEN TAKEN FROM AVAILABLE RECORDS AND THEIR COMPLETENESS AND CORRECTNESS ARE IN NO WAY GUARANTEED.

3. THE CONTRACTOR SHALL NOTIFY UNDERGROUND SERVICE ALERT (USA) AT 1-800-227-2600 AND ALL PUBLIC UTILITY COMPANIES AND OWNERS OF PRIVATE FACILITIES WITHIN THE AREA OF CONSTRUCTION AT LEAST 2 WORKING DAYS IN ADVANCE OF PERFORMING ANY WORK WITHIN SAID AREA.

4. THE CONTRACTOR SHALL OBTAIN ALL NECESSARY PERMITS FROM THE CITY BEFORE COMMENCING WORK. TRAFFIC CONTROL WITHIN PUBLIC STREET RIGHTS OF WAY SHALL BE IN CONFORMANCE WITH THE CALIFORNIA MUTCD MANUAL OR CITY OF TORRANCE STANDARDS FOR TRAFFIC CONTROL, LATEST EDITION. THE CONTRACTOR SHALL PROVIDE A 24-HOUR TELEPHONE NUMBER FOR EMERGENCY REPAIRS TO TRAFFIC CONTROL AND PAVEMENT MARKINGS.

5. CAUTION: REVIEW APPROVED CONSTRUCTION PLAN. IF CONSTRUCTION REQUIRES WORKERS AND/OR EQUIPMENT TO BE WITHIN 6 FEET OR CRANES OR HOISTING DEVICES TO BE WITHIN 10 FEET OF OVERHEAD ELECTRIC LINES, CALL SOUTHERN CALIFORNIA EDISON CO. AT 310-783-9336.

6. PRIOR TO COMMENCEMENT OF WORK, ALL SURVEY MONUMENTS IN THE PROJECT AREA SHALL BE LOCATED AND TIED OUT. ALL CENTERLINE MONUMENTS OR TIES LOST OR DESTROYED BY THIS WORK SHALL BE REPLACED EITHER BY A LICENSED SURVEYOR OR A CIVIL ENGINEER REGISTERED PRIOR TO JANUARY 1, 1982 AND NEW TIE SHEETS PROVIDED. METHOD OF ESTABLISHMENT SHALL BE STATED ON THE TIE SHEET.

7. GRADE SHEETS PREPARED AND STAMPED BY A LICENSED ENGINEER OR SURVEYOR SHALL BE DELIVERED TO THE INSPECTOR 24 HRS PRIOR TO COMMENCEMENT OF WORK.

8. THE CONTRACTOR SHALL NOTIFY THE PUBLIC WORKS DEPARTMENT AT 310-781-6900 PRIOR TO TRIMMING, REMOVING OR RELOCATING ANY EXISTING STREET TREES.

9. UNLESS OTHERWISE SHOWN, ALL TRAFFIC SIGNS SHALL BE RELOCATED OR REMOVED BY THE CONTRACTOR. THE CONTRACTOR SHALL NOTIFY THE PUBLIC WORKS DEPARTMENT AT 310-781-6900 AT LEAST 2 WORKING DAYS IN ADVANCE OF THE WORK.

10. STORM DRAIN CONNECTIONS TO THE L.A. COUNTY STORM DRAIN SYSTEM REQUIRE A PERMIT FROM L.A. COUNTY (1-626-458-3129) BEFORE ISSUANCE OF A CITY PERMIT.

11. IN CASE OF CONFLICT BETWEEN A CONNECTOR PIPE AND AN EXISTING UNDERGROUND LINE, THE CONNECTOR PIPE MAY BE REALIGNED OVER OR UNDER THE CONFLICTING LINE. CONNECTOR PIPE GRADES SHALL DRAIN POSITIVELY TOWARD THE MAIN LINE, AND WHERE GRADE BREAKS EXCEED FIVE DEGREES A CONCRETE COLLAR PER A.P.W.A. STD. DRAWING 380 SHALL BE CONSTRUCTED. APPROVAL FOR REALIGNMENT SHALL BE OBTAINED FROM THE COMMUNITY DEVELOPMENT/PUBLIC WORKS DIRECTOR PRIOR TO COMMENCEMENT OF WORK.

12. TRENCHES CUT INTO AN EXISTING ROADWAY WITHIN THE PUBLIC RIGHT OF WAY SHALL BE BACKFILLED AND PAVED AS PER TORRANCE STANDARD T116.

STORM DRAIN GENERAL NOTES (CON'T)

13. MANHOLE AND CATCH BASIN COVERS SHALL BE CAST WITH THE WORDS "TORRANCE DRAIN" FOR CITY MAINTAINED LINES AND "PRIVATE DRAIN" FOR PRIVATELY MAINTAINED LINES.

14. DURING NON-CONSTRUCTION HOURS, ALL EXCAVATIONS MUST BE APPROPRIATELY SHORED, PLATED OR BACKFILLED EXCEPT BORE PITS WHICH SHALL BE SECURED WITH K-RAIL AND 6' HIGH CHAIN LINK FENCE PANELS SECURED IN PLACE TO THE SATISFACTION OF THE PUBLIC WORKS INSPECTOR. STEEL PLATES SHALL BE TACK WELDED, PINNED AND/OR SECURED IN PLACE BY ANOTHER METHOD APPROVED BY THE INSPECTOR.

15. THE CONTRACTOR SHALL MAKE AVAILABLE FOR THE INSPECTOR'S REVIEW, ON A DAILY BASIS, AS-BUILT DRAWINGS FOR WORK PERFORMED UP TO AND INCLUDING THE PREVIOUS DAY'S ACTIVITIES. WORK SHALL NOT BE CONSIDERED AS COMPLETE UNTIL AS-BUILT DRAWINGS ARE SUBMITTED TO AND ACCEPTED BY THE COMMUNITY DEVELOPMENT DIRECTOR.

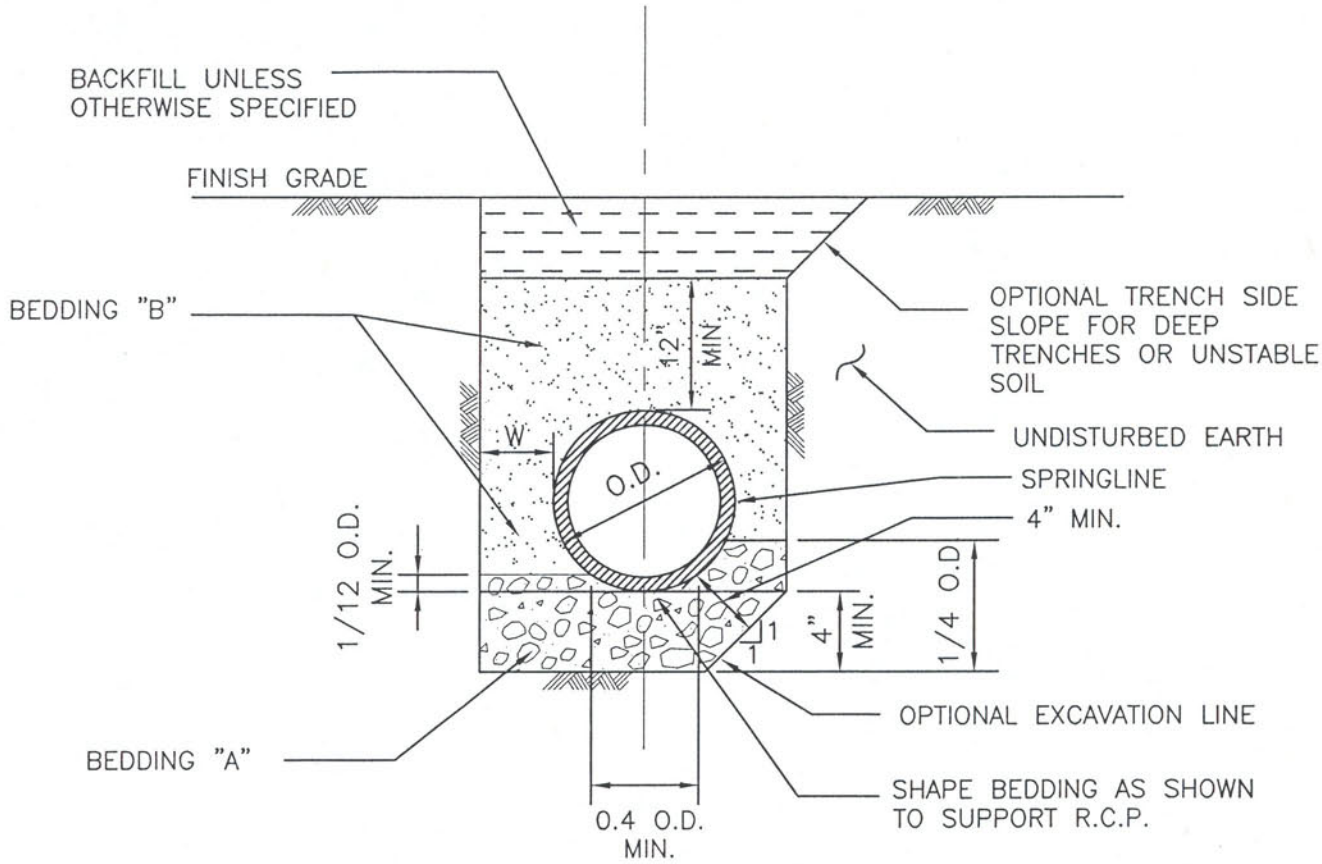

1. BEDDING "A" SHALL BE COMPOSED OF EITHER SAND, NO. 3 OR NO. 4 CRUSHED ROCK OR GRAVEL PER STANDARD SPECIFICATIONS. OTHER GRANULAR MATERIAL WITH A SAND EQUIVALENT OF 30 OR GREATER MAY BE USED WHEN APPROVED BY THE COMMUNITY DEVELOPMENT/PUBLIC WORKS DIRECTOR.

2. BEDDING "B" SHALL BE COMPOSED OF SAND OR OTHER GRANULAR MATERIAL WITH A SAND EQUIVALENT OF 30 OR GREATER AS APPROVED BY THE COMMUNITY DEVELOPMENT/PUBLIC WORKS DIRECTOR AND SHALL CONFORM TO SECTION 306-1.2.1 OF THE STANDARD SPECIFICATIONS, EXCEPT BEDDING FOR PLASTIC PIPE SHOULD CONFORM TO SECTION 306-1.2.13.

3. BEDDING "B" SHALL BE COMPACTED TO A RELATIVE COMPACTION OF NOT LESS THAN 90 PERCENT UNLESS OTHERWISE SPECIFIED.

4. BEDDING "B" SHALL BE PLACED IN TWO OR MORE LIFTS FOR PIPES WITH AN O.D. GREATER THAN 60 INCHES.

CITY OF TORRANCE		
DATE ISSUED	**BEDDING FOR STORM DRAIN**	STANDARD NO.
02 JUL 2008	ROBERT J. BESTE PUBLIC WORKS DIRECTOR R.C.E. NO. 50737	**T302**
		SHEET 1 OF 2

TT\T302

5. BACKFILL SHALL BE PER SECTION 306–1.3 OF THE STANDARD SPECIFICATIONS.

6. WHERE THE COVER IS 8 FEET OR LESS, "W" MUST BE A MINIMUM OF 6 INCHES. WHERE THE COVER IS GREATER THAN 8 FEET, "W" MUST BE BETWEEN 6 AND 10 INCHES INCLUSIVE FOR PIPES UP TO AND INCLUDING 96 INCHES IN DIAMETER. FOR PIPES OVER 96 INCHES IN DIAMETER, "W" MUST BE BETWEEN 6 AND 12 INCHES INCLUSIVE.

7. "W" SHALL INCLUDE THE THICKNESS OF ANY SHORING.

8. SHORING SHALL BE A MINIMUM OF 6 INCHES FROM THE PIPE AT SPRINGLINE.

PROJECTS UNDER CONSTRUCTION

URBAN RUNOFF REQUIREMENTS

ALL PROJECTS UNDER CONSTRUCTION IN THE CITY OF TORRANCE MUST FOLLOW SPECIFIC BEST MANAGEMENT PRACTICES, OR BMPS. BMPS INSURE THAT HAZARDOUS MATERIALS, POLLUTANTS AND OTHER ITEMS ARE CONTAINED ON SITE AND DO NOT GET WASHED OR DUMPED INTO THE STORM DRAIN SYSTEM. THE BMPS IN THE LIST BELOW ARE REQUIRED BY CITY CODE SECTION 411.1. BMPS MUST BE PUT INTO PRACTICE AT THE START OF ANY CONSTRUCTION ON PRIVATE PROPERTY OR IN THE PUBLIC RIGHT OF WAY THAT MAY IMPACT THE DRAINAGE SYSTEM. BMPS MUST BE FULLY IMPLEMENTED UNTIL ALL WORK THAT MAY IMPACT THE DRAINAGE SYSTEM HAS BEEN COMPLETED.

THE CONTRACTOR IS SOLELY RESPONSIBLE, AT ITS EXPENSE, TO PROVIDE ALL LABOR, TOOLS, MATERIALS, EQUIPMENT AND DEVICES NECESSARY TO IMPLEMENT ALL BMPS TO THE SATISFICATION OF THE COMMUNITY DEVELOPMENT AND PUBLIC WORKS DIRECTORS, AND IS NOT PERMITTED TO BEGIN CONSTRUCTION UNTIL SUCH ITEMS ARE IN PLACE.

BEST MANAGEMENT PRACTICES

(BMPS)

1. RUNOFF CONTAINING SEDIMENT, OIL, GREASE AND CONSTRUCTION WASTE FROM CONSTRUCTION SITES AND PARKING AREAS MUST NOT LEAVE THE SITE OR ENTER ANY ON-SITE STORM DRAIN.
2. ANY SEDIMENT OR OTHER MATERIALS WHICH ARE TRACKED OFF THE SITE MUST BE CLEANED AND REMOVED THE SAME DAY. WHERE DETERMINED TO BE NECESSARY BY THE DESIGNATED CITY REPRESENTATIVE, A TEMPORARY SEDIMENT BARRIER MUST BE INSTALLED.
3. DURING EMERGENCIES, A PLASTIC COVERING MAY BE USED TO PREVENT EROSION OF AN UNPROTECTED AREA, ALONG WITH DEVICES DESIGNED TO INTERCEPT AND SAFELY DIVERT RUNOFF.
4. EXCAVATED SOIL MUST BE PLACED ON-SITE IN A WAY THAT INSURES THAT THE SOIL WON'T BE WASHED INTO THE STREET OR ADJOINING PROPERTIES.
5. DURING THE RAINY SEASON OR IF CHANCE OF PRECIPITATION EXIST, SOIL PILES MUST BE COVERED UNTIL THE SOIL IS EITHER USED OR REMOVED.
6. WASHING OF CONSTRUCTION OR OTHER INDUSTRIAL VEHICLES IS NOT ALLOWED ADJACENT TO THE CONSTRUCTION SITE. RUNOFF FROM THE WASHING OF VEHICLES ON A CONSTRUCTION SITE IS NOT ALLOWED TO LEAVE THE SITE OR ENTER THE STORM DRAIN.
7. DRAINAGE CONTROLS MUST BE USED AS NEEDED, DEPENDING ON THE EXTENT OF PROPOSED GRADING AND TOPOGRAPHY OF THE SITE.

PENALTIES FOR NON-COMPLIANCE

FAILURE TO IMPLEMENT BEST MANAGEMENT PRACTICES AT CONSTRUCTION SITES SHALL CONSTITUTE A MISDEMEANOR PUNISHABLE BY A FINE AS PER CITY ORDINANCE NO. 3452. EACH DAY THAT A VIOLATION OCCURS SHALL CONSTITUTE A SEPARATE OFFENSE. THE CITY IS ALSO AUTHORIZED TO ABATE VIOLATIONS BY MEANS OF A CIVIL ACTION. CONSTRUCTION SITES ARE SUBJECT TO STOPPAGE OF WORK FOR VIOLATION OF THESE REQUIREMENTS.

VIOLATION OF THESE PROVISIONS ALSO VIOLATE THE REGULATION OF THE NATIONAL POLLUTANT DISCHARGE ELIMINATION SYSTEM (NPDES), CLEAN WATER SECTION 402 AND DIVISION 7 OF THE CALIFORNIA WATER CODE. THE VIOLATOR MAY BE SUBJECTED TO FINES AND/OR IMPRISONMENT AS PER STATE AND/OR FEDERAL STATUTES.

CITY OF TORRANCE		
DATE ISSUED 23 SEP 2009	**NPDES - BEST MANAGEMENT PRACTICES** ROBERT J. BESTE PUBLIC WORKS DIRECTOR R.C.E. NO. 50737	STANDARD NO. **T303** SHEET 1 OF 1

TT/T303

GENERAL NOTES

1. ALL WORK SHALL BE DONE IN ACCORDANCE WITH THE STANDARD SPECIFICATIONS FOR PUBLIC WORKS CONSTRUCTION, LATEST EDITION AND SUPPLEMENTS THERETO, AS WRITTEN AND PROMULGATED BY PUBLIC WORKS STANDARDS, INC., HEREINAFTER REFERRED TO AS THE STANDARD SPECIFICATIONS, THE TORRANCE STANDARDS, THE AMERICAN WATER WORKS ASSOCIATION STANDARDS LATEST EDITION, AND TO THE SATISFACTION OF THE COMMUNITY DEVELOPMENT OR PUBLIC WORKS DIRECTOR.

2. IT SHALL BE THE RESPONSIBILITY OF THE CONTRACTOR TO LOCATE, VERIFY DEPTH AND PROTECT ALL STRUCTURES, INCLUDING SUBSTRUCTURES, SHOWN ON THE PLAN. THE CONTRACTOR SHALL BEAR THE ENTIRE COST OF REPAIRING OR REPLACING ANY OF SAID STRUCTURES DAMAGED BY HIM/HER DURING PROSECUTION OF THE WORK. ALL REPAIRS AND REPLACEMENTS SHALL BE DONE IN THE PRESENCE OF THE INSPECTOR. ALL LOCATIONS SHOWN ON THE PLAN FOR UTILITY LINES HAVE BEEN TAKEN FROM AVAILABLE RECORDS AND THEIR COMPLETENESS AND CORRECTNESS ARE IN NO WAY GUARANTEED.

3. THE CONTRACTOR SHALL NOTIFY UNDERGROUND SERVICE ALERT (USA) AT 1-800-227-2600 AND ALL PUBLIC UTILITY COMPANIES AND OWNERS OF PRIVATE FACILITIES WITHIN THE AREA OF CONSTRUCTION AT LEAST 2 WORKING DAYS IN ADVANCE OF PERFORMING ANY WORK WITHIN SAID AREA.

4. THE CONTRACTOR SHALL OBTAIN ALL NECESSARY PERMITS FROM THE CITY BEFORE COMMENCING WORK. TRAFFIC CONTROL WITHIN PUBLIC STREET RIGHTS OF WAY SHALL BE IN CONFORMANCE WITH THE CALIFORNIA MUTCD MANUAL OR CITY OF TORRANCE STANDARDS FOR TRAFFIC CONTROL, LATEST EDITION. THE CONTRACTOR SHALL PROVIDE A 24-HOUR TELEPHONE NUMBER FOR EMERGENCY REPAIRS TO TRAFFIC CONTROL AND PAVEMENT MARKINGS.

5. OVERHEAD UTILITY LINES CAUTION: REVIEW APPROVED CONSTRUCTION PLAN. IF CONSTRUCTION REQUIRES WORKERS AND/OR EQUIPMENT TO BE WITHIN 6 FEET OR CRANES OR HOISTING DEVICES TO BE WITHIN 10 FEET OF OVERHEAD ELECTRIC LINES, CALL SOUTHERN CALIFORNIA EDISON AT 310-783-9336.

6. PRIOR TO COMMENCEMENT OF WORK, ALL SURVEY MONUMENTS IN THE PROJECT AREA SHALL BE LOCATED AND TIED OUT. ALL CENTERLINE MONUMENTS OR TIES LOST OR DESTROYED BY THIS WORK SHALL BE REPLACED EITHER BY A LICENSED SURVEYOR OR A CIVIL ENGINEER REGISTERED PRIOR TO JANUARY 1, 1982 AND NEW TIE SHEETS PROVIDED. METHOD OF ESTABLISHMENT SHALL BE STATED ON THE TIE SHEET.

7. GRADE SHEETS PREPARED AND STAMPED BY A LICENSED ENGINEER OR SURVEYOR SHALL BE DELIVERED TO THE INSPECTOR 24 HOURS PRIOR TO COMMENCEMENT OF WORK.

8. THE CONTRACTOR SHALL NOTIFY THE PUBLIC WORKS DEPARTMENT AT 310-781-6900 PRIOR TO TRIMMING, REMOVING OR RELOCATING ANY EXISTING STREET TREES.

9. UNLESS OTHERWISE SHOWN, ALL TRAFFIC SIGNS SHALL BE RELOCATED OR REMOVED BY THE CONTRACTOR. THE CONTRACTOR SHALL NOTIFY THE PUBLIC WORKS DEPARTMENT AT 310-781-6900 AT LEAST 2 WORKING DAYS IN ADVANCE OF THE WORK.

10. THE CONTRACTOR SHALL DISINFECT WATER LINES UNDER THE DIRECTION OF THE CITY'S WATER QUALITY INSPECTOR. THE TORRANCE MUNICIPAL WATER DEPARTMENT SHALL COLLECT WATER SAMPLES FOR ANALYSIS SUBSEQUENT TO DISINFECTING OF THE PIPELINE BY THE CONTRACTOR.

11. THE CONTRACTOR SHALL NOTIFY THE INSPECTOR AT LEAST TWO WORKING DAYS IN ADVANCE OF A PROPOSED WATER MAIN OR SERVICE LINE SHUT DOWN. THE CONTRACTOR SHALL NOTIFY THE CUSTOMERS EFFECTED BY THE PROPOSED SHUT DOWN AT LEAST 24 HOURS IN ADVANCE. CUSTOMER NOTIFICATION SHALL CONSIST OF A DOOR HANGER SPECIFING THE DATE(S) AND TIME(S) OF THE PROPOSED SHUT DOWN. NOTICE SHALL CONTAIN THE CONTRACTORS NAME AND TELEPHONE NUMBER. NOTICE SHALL BE APPROVED BY THE INSPECTOR PRIOR TO DISTRIBUTION.

12. OPERATION OF VALVES ON ALL PUBLIC WATER LINES AND THE FIRST NEW VALVE DOWNSTREAM OF A PUBLIC WATER MAIN SHALL BE PERFORMED BY THE TORRANCE MUNICIPAL WATER DEPARTMENT UNLESS OTHERWISE SHOWN.

13. ALL WATER LINES SHALL HAVE 42" COVER FROM PROPOSED FINISHED GRADE UNLESS OTHERWISE SHOWN ON THE PLAN.

CITY OF TORRANCE

DATE ISSUED	WATER GENERAL NOTES	STANDARD NO.
12 MAY 2008	ROBERT J. BESTE PUBLIC WORKS DIRECTOR R.C.E. NO. 50737	T700
		SHEET 1 OF 2

TT\T700

GENERAL NOTES (CON'T)

14. FOR PARALLEL CONSTRUCTION ALL WATER LINES SHALL BE INSTALLED WITH A TWO FOOT (MIN.) CLEARANCE FROM EXISTING UTILITY LINES (GAS, TELEPHONE, CABLE, POWER...). A MINIMUM OF 12" CLEARANCE SHALL BE PROVIDED WHEN CROSSING UTILITY LINES.

15. NO PVC PIPE SHALL BE INSTALLED UPSTREAM OF THE INLET SIDE OF METERS OR DETECTOR CHECK VALVES.

16. CONTRACTOR SHALL MAKE AVAILABLE FOR THE PUBLIC WORKS INSPECTOR'S REVIEW, ON A DAILY BASIS, AS-BUILT DRAWINGS FOR WORK PERFORMED UP TO AND INCLUDING THE PREVIOUS DAY'S ACTIVITIES. WORK SHALL NOT BE CONSIDERED AS COMPLETE UNTIL AS-BUILTS ARE SUBMITTED TO AND ACCEPTED BY THE COMMUNITY DEVELOPMENT OR PUBLIC WORKS DIRECTOR.

17. TRENCHES CUT INTO AN EXISTING ROADWAY WITHIN THE PUBLIC RIGHTS OF WAY SHALL BE BACKFILLED AND PAVED AS PER CITY OF TORRANCE STANDARD T116.

18. TRENCH RESURFACING SHALL BE OF THE SAME TYPE AS THE EXISTING PAVEMENT, EXCEPT IF EXISTING PAVEMENT IS A.C. OVER P.C.C., RESURFACING MAY BE FULL-DEPTH A.C.

19. PIPE BEDDING SHALL CONFORM TO TORRANCE STANDARD DRAWING T701.

20. ALL FLANGE NUTS, BOLTS AND WASHERS SHALL BE 316 S.S. UNLESS OTHERWISE SHOWN.

21. ALL BURIED PIPE, VALVES, FITTING, ETC. SHALL BE WRAPPED IN 8 MIL. POLYETHYLENE.

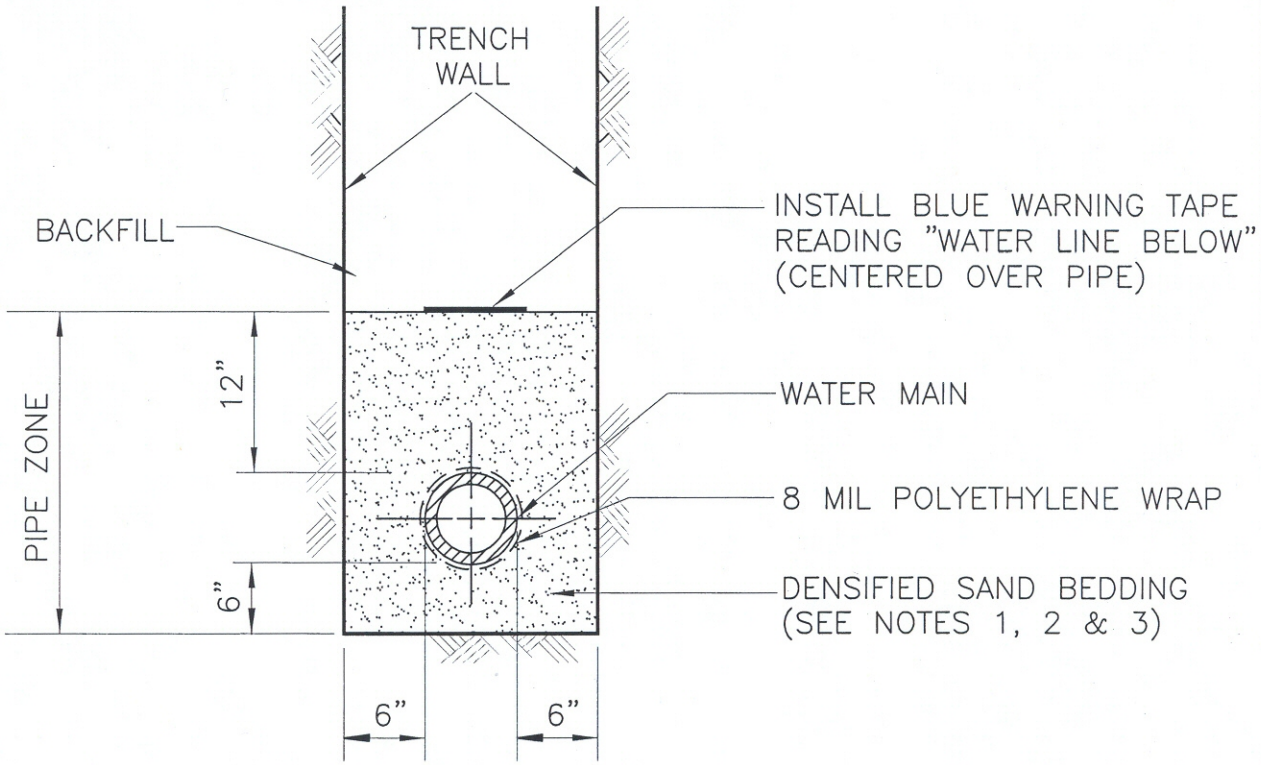

NOTES:

1. SAND BEDDING SHALL CONFORM TO SECTIONS 200–1.5.3 AND 200–1.5.5 OF THE STANDARD SPECIFICATIONS FOR PUBLIC WORKS CONSTRUCTION (LATEST EDITION).
2. DENSIFICATION OF BEDDING SHALL BE ACCOMPLISHED IN CONFORMANCE WITH 306–1.2.1 OF THE STANDARD SPECIFICATIONS FOR PUBLIC WORKS CONSTRUCTION (LATEST EDITION).
3. BEDDING SHALL BE COMPACTED TO 95% OF MAXIMUM DENSITY UNDER STRUCTURES AND 90% ELSEWHERE.

ACCOMPANYING STD.'S T700 AND T116

CITY OF TORRANCE		
DATE ISSUED JAN 2011	**BEDDING FOR WATER PIPE** ROBERT J. BESTE PUBLIC WORKS DIRECTOR R.C.E. NO. 50737	STANDARD NO. **T 701** SHEET 1 OF 1

DV/EM/T701–1

ITEM	DESCRIPTION
1	KUPFERLE TRUFLO MODEL TF550 BLOW-OFF HYDRANT W/2" FIP INLET
2	2" ADAPTOR – 2" MIP x SJ
3	2" COPPER TYPE K-SOFT TUBING
4	2" FIP BALL VALVE-FORD B11-777NL, JONES E1900 OR CB# 202NL-F7F7
5	2" BRASS STREET ELBOW
6	VALVE BOX ASSEMBLY (SEE T712) MOD.
7	2" BRASS NIPPLE AS REQUIRED
8	CONC. THRUST BLOCK PER T713
9	4" BLIND FLANGE W/FULL FACE GASKET W/2" IP DRILLED & TAPPED HOLE
10	2" 90° ELBOW – COPPER TO COPPER SJxSJ

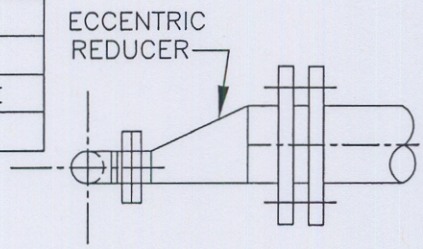

VIEW A

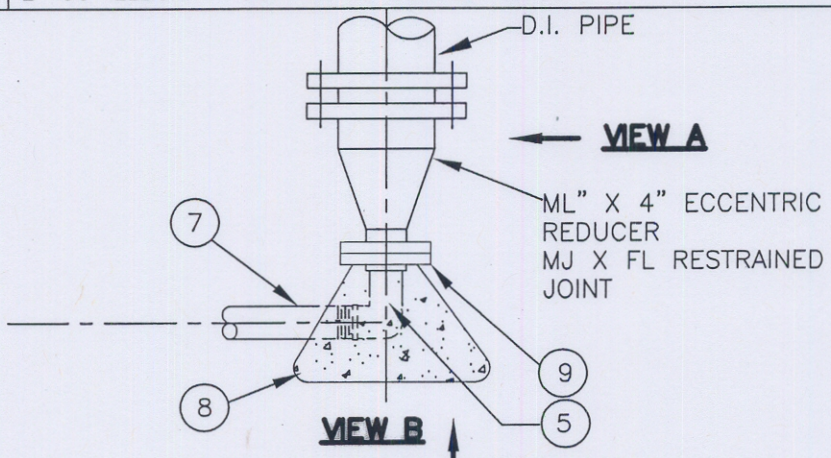

VIEW B
PLAN

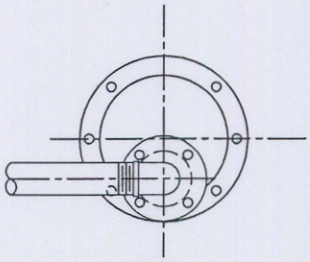

VIEW B

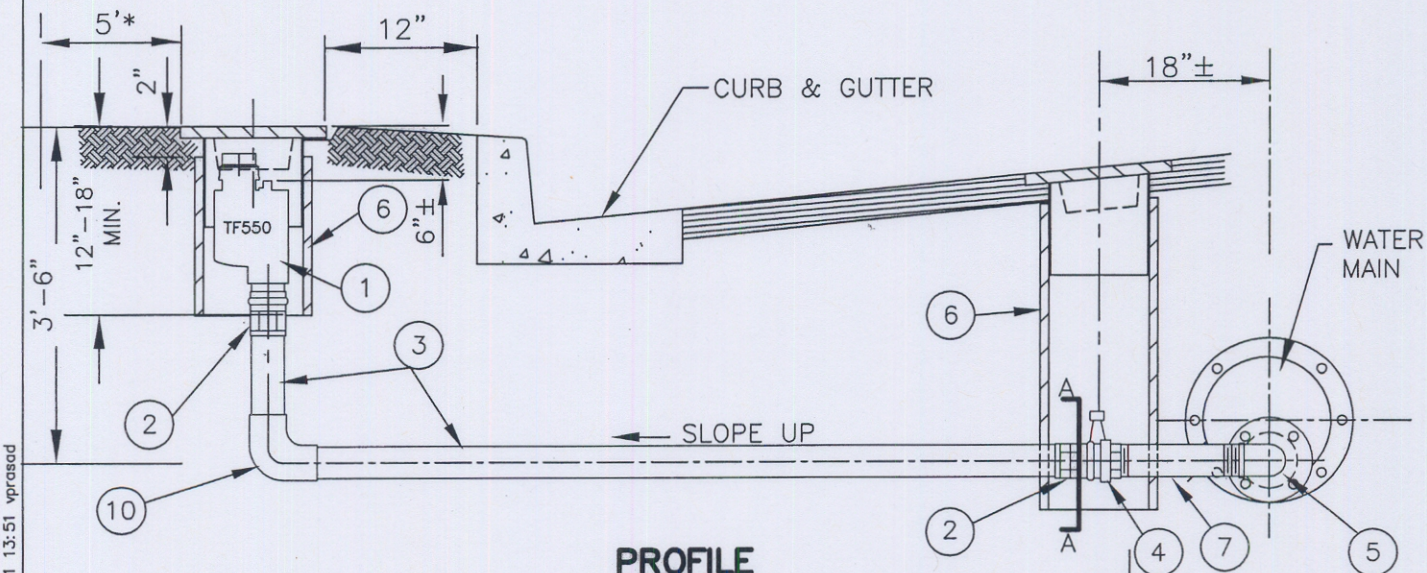

PROFILE

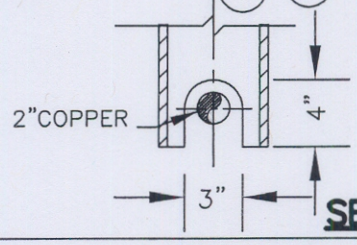

SECTION A–A

* WHERE THERE IS NO CURB, THE VALVE BOX ASSEMBLY SHALL BE SET 5' CLEAR OF PROPERTY LINE.

ACCOMPANYING STD'S T700, T701, T712, T713 AND T116

CITY OF TORRANCE

DATE ISSUED	2" BLOW-OFF ASSEMBLY	STANDARD NO.
JAN 2011	ROBERT J. BESTE PUBLIC WORKS DIRECTOR R.C.E. NO. 50737	T 707
		SHEET 1 OF 1

X:\ENG\VPrasad\Water Standards\T707.dwg 2/08/11 13:51 vprasad

X:\ENG\VPrasad\Water Standards\T708.dwg 2/08/11 13:53 vprasad

ACCOMPANYING STD'S T700, T701, T702, T712 AND T116

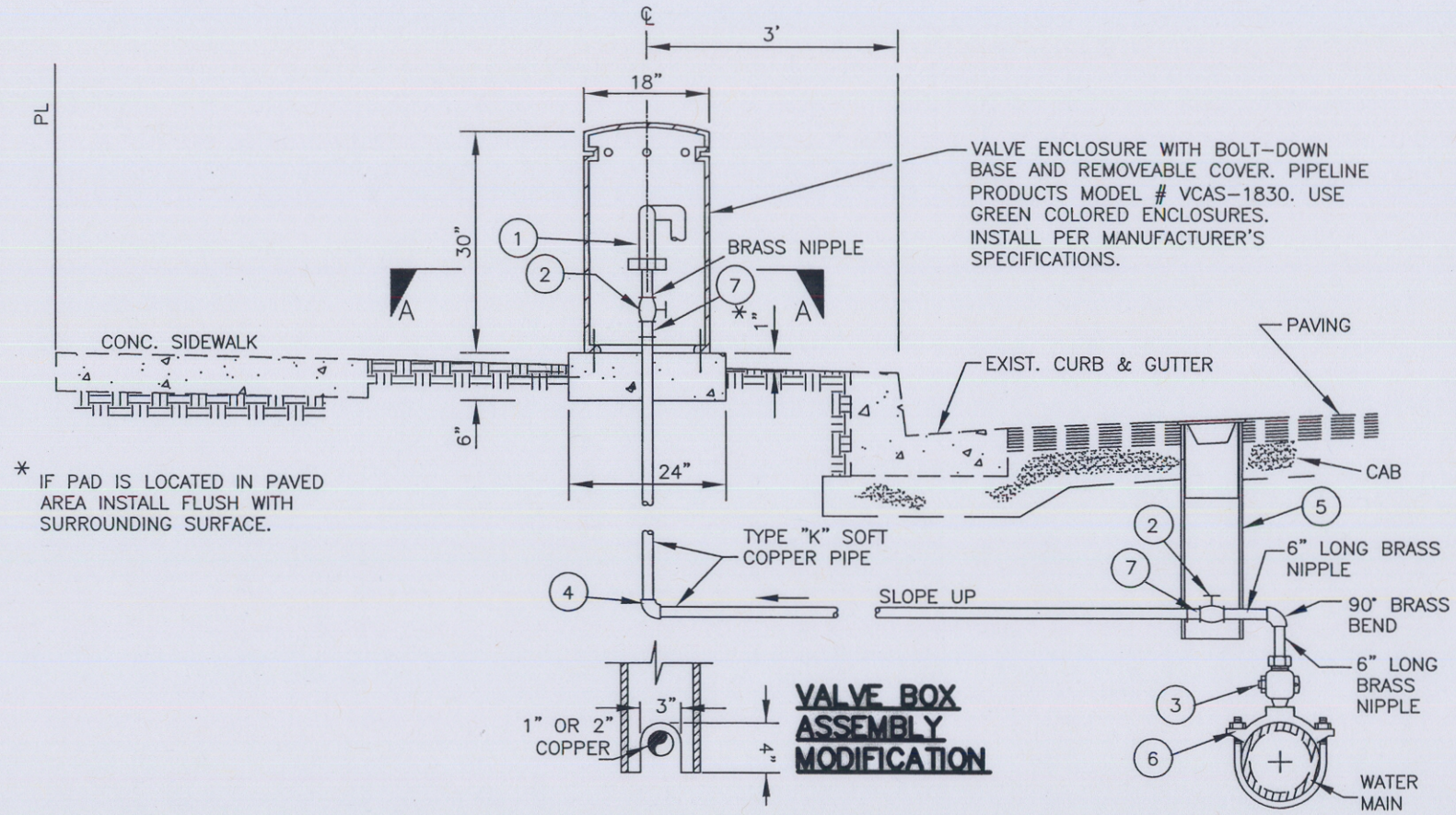

* IF PAD IS LOCATED IN PAVED AREA INSTALL FLUSH WITH SURROUNDING SURFACE.

VALVE BOX ASSEMBLY MODIFICATION

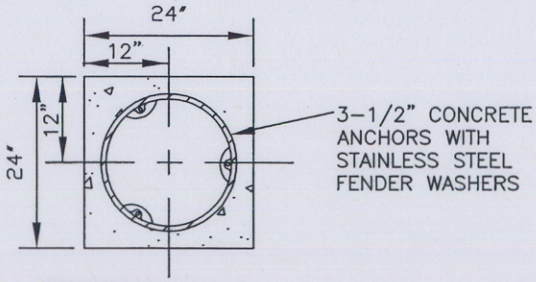

SECTION A-A

VALVE & PIPE OMITTED FOR CLARITY

COMBINATION AIR & VACUUM RELEASE VALVE
**(FOR MAIN SIZE >= 16" USE 2", FOR MAIN SIZE < 16", USE 1")

ITEM	PART NO.		**SIZE	DESCRIPTION
1	ARI D-040-P		1" OR 2"	COMBINATION AIR & VACUUM RELEASE VALVE
2	B11-444NL(FORD)	E-1900(JONES)	1"	BALL VALVE, FIPxFIP
	B11-777NL(FORD)	E-1900(JONES)	2"	
	CAMBRIDGE BRASS	#202NL-F4F4	1"	
	CAMBRIDGE BRASS	#202NL-F7F7	2"	
3	FB 1700-4NL(FORD)	E-1931(JONES)	1"	CORPORATION STOP, CCxFIP
	FB 1700-7NL(FORD)	E-1961(JONES)	2"	
	CAMBRIDGE BRASS	#30NL-M4F4	1"	
	CAMBRIDGE BRASS	#301NL-M7F7	2"	
4			1" OR 2"	90° COPPER ELBOW, SJXSJ
5				VALVE BOX ASSEMBLY (SEE T712) MOD.
6	J979(JONES)	CAMBRIDGE BRASS #810	1" OR 2"	CC SERVICE SADDLE-DOUBLE STRAP
7			1" OR 2"	COPPER FITTING SJ x MIP

DATE ISSUED
JAN 2011

CITY OF TORRANCE

AIR AND VACUUM RELEASE VALVE

ROBERT J. BESTE
PUBLIC WORKS DIRECTOR
R.C.E. NO. 50737

STANDARD NO.
T 708
SHEET 1 OF 1

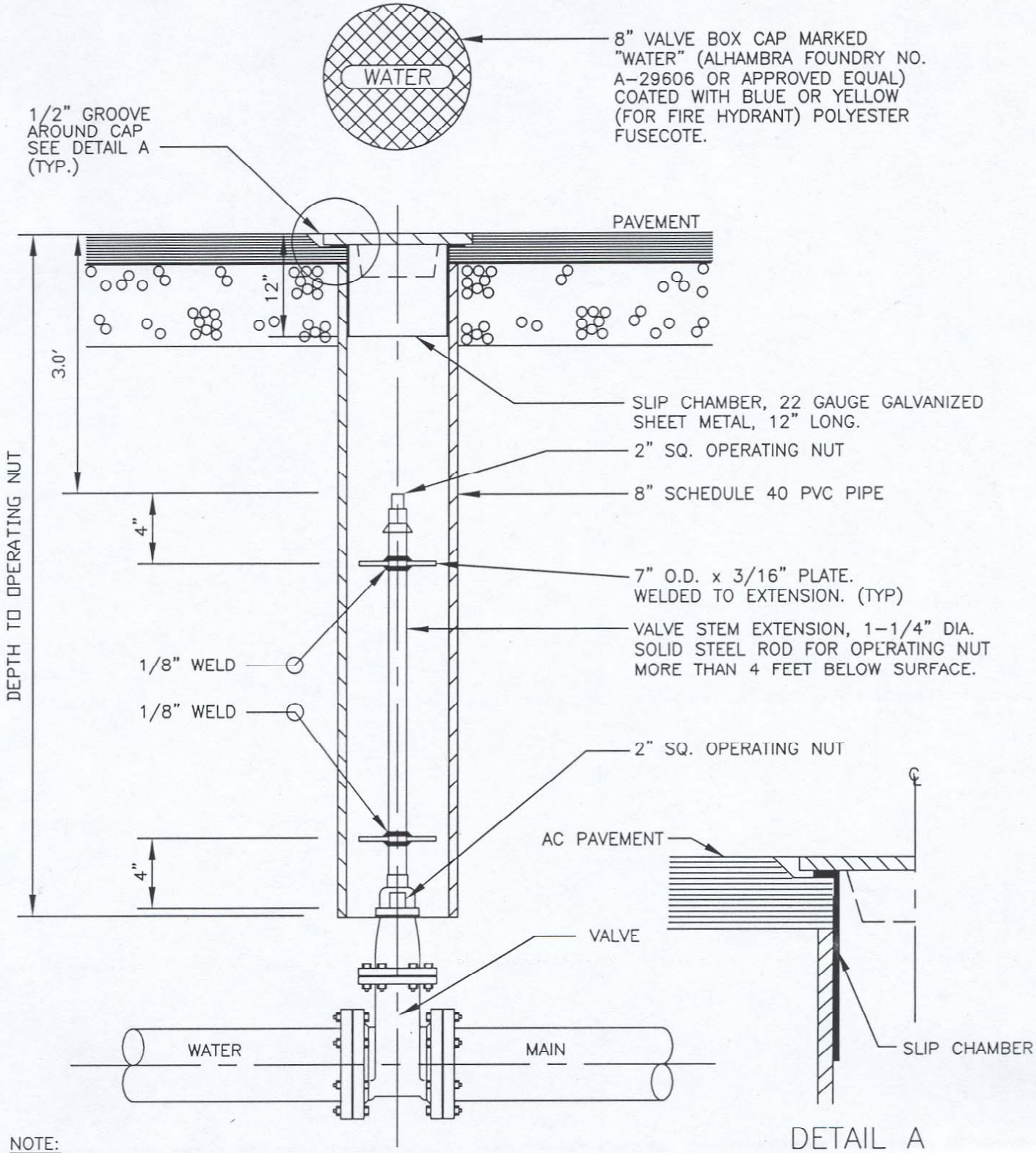

DETAIL A
NOT TO SCALE

NOTE:

VALVE STEM EXTENSION SHALL BE PROVIDED WHERE DEPTH TO OPERATING NUT EXCEEDS 4'-0".

ACCOMPANYING STD. T700 AND T701

CITY OF TORRANCE		
DATE ISSUED 11 DEC 2006	**VALVE BOX ASSEMBLY** ROBERT J. BESTE PUBLIC WORKS DIRECTOR R.C.E. NO. 50737	STANDARD NO. **T712** SHEET 1 OF 1

EM/T712-3

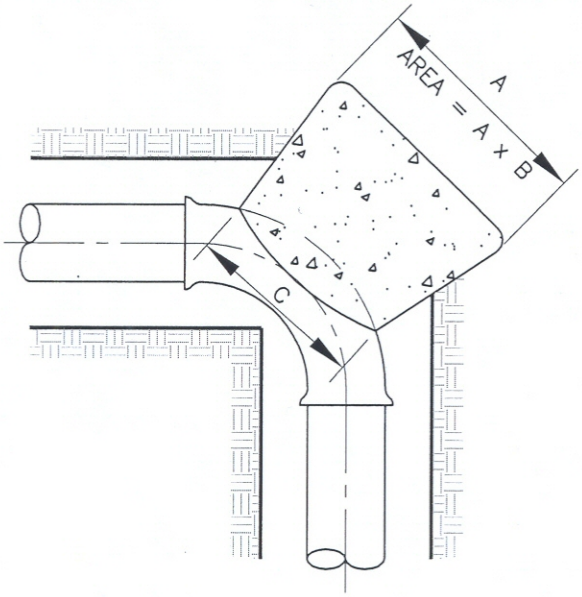

90 BEND

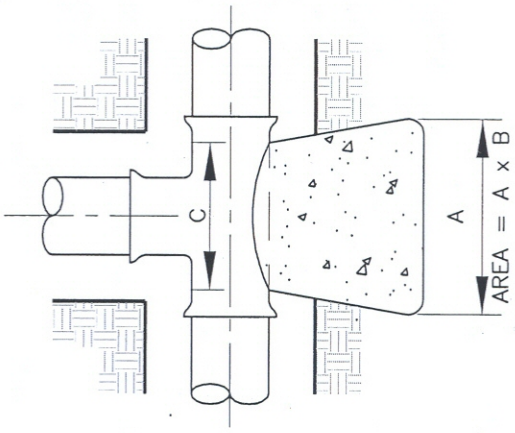

TEE

EXPOSED PORTION OF RE-BARS SHALL BE FIELD COATED W/TAR TO PREVENT CORROSION. MAKE BLOCK FULL WIDTH OF TRENCH.

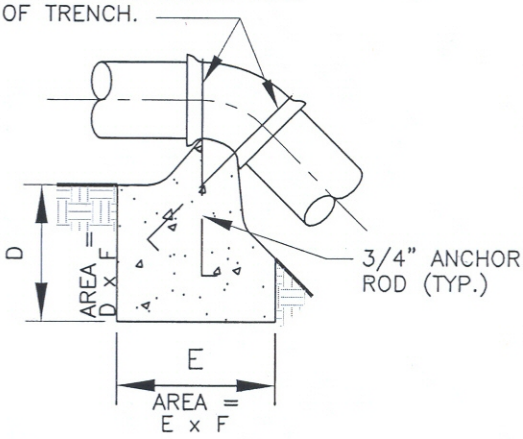

VERTICAL BEND

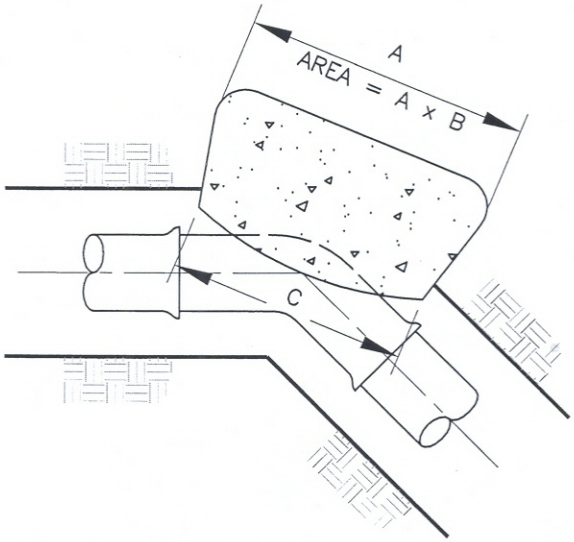

BEND

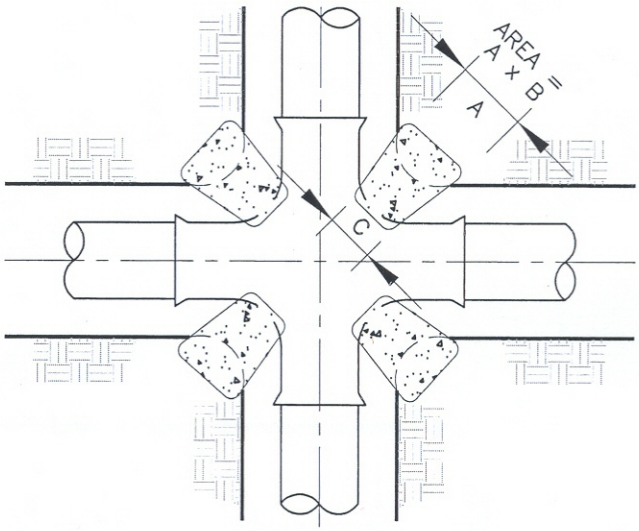

CROSS

NOTE:

SEE SHEET 2 FOR THRUST BLOCK SCHEDULE AND NOTES.

CITY OF TORRANCE		
DATE ISSUED JAN 2011	CONCRETE THRUST BLOCK ROBERT J. BESTE PUBLIC WORKS DIRECTOR R.C.E. NO. 50737	STANDARD NO. T 713 SHEET 1 OF 2

VERTICAL BENDS														
NOMINAL PIPE SIZE (INCHES)	TEST PRESSURE (PSI)	BENDS LESS THAN OR EQUAL TO ANGLE												ALL BENDS
		11–1/4°			22–1/2°			45°			90°			
		D	E	F	D	E	F	D	E	F	D	E	F	C
6"	200	1'–6"	3'–0"	1'–0"	2'–0"	4'–0"	1'–0"	3'–0"	5'–6"	1'–0"	4'–0"	7'–0"	2'–0"	8"
8"	200	2'–0"	4'–0"	1'–0"	2'–6"	5'–0"	1'–0"	3'–6"	7'–0"	2'–0"	5'–0"	10'–0"	3'–6"	10"
10"	200	2'–0"	4'–6"	1'–0"	3'–0"	6'–0"	1'–6"	4'–0"	9'–0"	3'–0"	6'–0"	12'–0"	5'–0"	1'–0"
12"	200	2'–6"	5'–0"	1'–0"	3'–6"	7'–0"	2'–0"	5'–0"	10'–0"	4'–0"	7'–0"	14'–0"	7"–0"	1'–0"

HORIZONTAL BENDS																	
NOMINAL PIPE SIZE (INCHES)	TEST PRESSURE (PSI)	DEAD ENDS AND TEES			CROSS			BENDS LESS THAN OR EQUAL TO ANGLE								ALL BENDS
								11–1/4°		22–1/2°		45°		90°		
		A	B	C	A	B	C	A	B	A	B	A	B	A	B	C
6"	200	2'–6"	1'–6"	6"	2'–0"	1'–0"	6"	1'–0"	1'–0"	2'–0"	1'–0"	3'–0"	1'–0"	3'–6"	1'–6"	8"
8"	200	4'–6"	1'–6"	8"	2'–0"	1'–6"	8"	1'–6"	1'–0"	3'–0"	1'–0"	3'–6"	1'–6"	5'–0"	2'–0"	10"
10"	200	5'–6"	2'–0"	10"	2'–6"	2'–0"	10"	2'–0"	1'–0"	3'–0"	1'–6"	4'–0"	2'–0"	6'–0"	2'–6"	1'–0"
12"	200	7'–6"	2'–0"	1'–0"	3'–6"	2'–0"	1'–0"	2'–0"	1'–6"	3'–0"	2'–0"	4'–6"	2'–6"	7'–0"	3'–0"	1'–0"

NOTES:

1. THRUST BLOCK SIZES ARE BASED ON A BEARING CAPACITY OF 1500 P.S.F., WITH A MINIMUM SOIL COVER OF 3'–0". IF SOIL COVER IS LESS THAN 3'–0", MULTIPLY BEARING AREA BY FACTOR OF 1.5 FOR SOIL COVER OF 2'–0" TO 3'–0", OR 3.0 FOR SOIL COVER OF 1'–0" TO 2'–0".
2. DIMENSIONS SHOWN REFER TO THRUST BLOCK TYPES SHOWN IN DETAIL, AND ARE MINIMUM VALUES ONLY.
3. CONCRETE MIX SHALL BE IN ACCORDANCE WITH SPECIFICATIONS FOR 3000 LBS. STRENGTH AT 28 DAYS WHEN TESTED IN ACCORDANCE WITH ASTM C39.
4. ALL THRUST BLOCKS SHALL BE POURED SOLIDLY AGAINST FIRM, UNDISTURBED SOIL.
5. IF SOILS HAVE BEEN PREVIOUSLY EXCAVATED AND BACKFILLED, CONTRACTOR SHALL NOTIFY THE ENGINEERING DIRECTOR, WHO MAY DIRECT THAT THE DIMENSIONS SHOWN SHALL BE INCREASED BY A FACTOR OF 1.5.
6. CONCRETE POURED AGAINST PIPE FITTINGS SHALL NOT EXTEND BEYOND THE FITTING JOINTS WITHOUT THE APPROVAL OF THE ENGINEERING DIRECTOR.
7. WHERE WATER MAIN DEAD ENDS AND IS BLIND FLANGED OR CAPPED, THE THRUST BLOCK SHALL EXTEND A MINIMUM DISTANCE OF 6" INTO THE SIDE OF TRENCH ON EITHER SIDE OF PIPE.

CITY OF TORRANCE

DATE ISSUED		STANDARD NO.
JAN 2011	**THRUST BLOCK SCHEDULE**	**T 713**
	ROBERT J. BESTE PUBLIC WORKS DIRECTOR R.C.E. NO. 50737	SHEET 2 OF 2

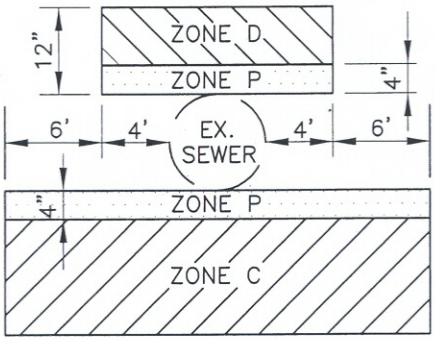

PERPENDICULAR CONSTRUCTION

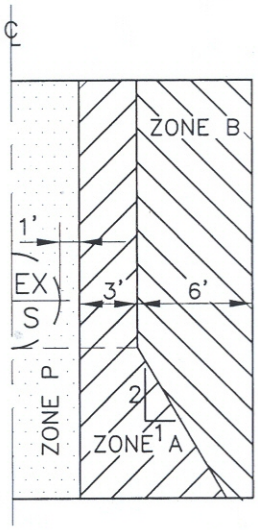

PARALLEL CONSTRUCTION

CITY OF TORRANCE		
DATE ISSUED JAN 2011	WATER AND SEWER SEPARATION REQUIREMENTS ROBERT J. BESTE PUBLIC WORKS DIRECTOR R.C.E. NO. 50737	STANDARD NO. T 714 SHEET 1 OF 2

BASIC SEPARATION STANDARDS

1. PARALLEL CONSTRUCTION: THE HORIZONTAL DISTANCE BETWEEN PRESSURE DOMESTIC WATER AND RECLAIMED WATER MAINS AND SEWER LINES SHALL BE AT LEAST 10 FEET.

2. PERPENDICULAR CONSTRUCTION (CROSSING): PRESSURE WATER MAINS SHALL BE AT LEAST ONE FOOT ABOVE SANITARY SEWER AND RECLAIMED WATER LINES WHERE THESE LINES MUST CROSS.

3. SPECIAL PROVISIONS: ALTERNATE CONSTRUCTION CRITERIA WHERE THE BASIC SEPARATION STANDARDS CANNOT BE ATTAINED ARE SHOWN BELOW:

ZONE	WATER CONSTRUCTION (EXISTING SEWER)
B	1) CLASS 350 D.I.P. WATER MAIN. 2) APPROVED ALTERNATES.
C/D	1) CLASS 350 D.I.P. WATER MAIN W/NO JOINT 2) STEEL CASING PER STD. T715 3) APPROVED ALTERNATES.
A	NO CONSTRUCTION WITHOUT APPROVAL OF WATER DIVISION AND DEPARTMENT OF PUBLIC HEALTH.
P	CONSTRUCTION WITHIN THIS AREA PROHIBITED.

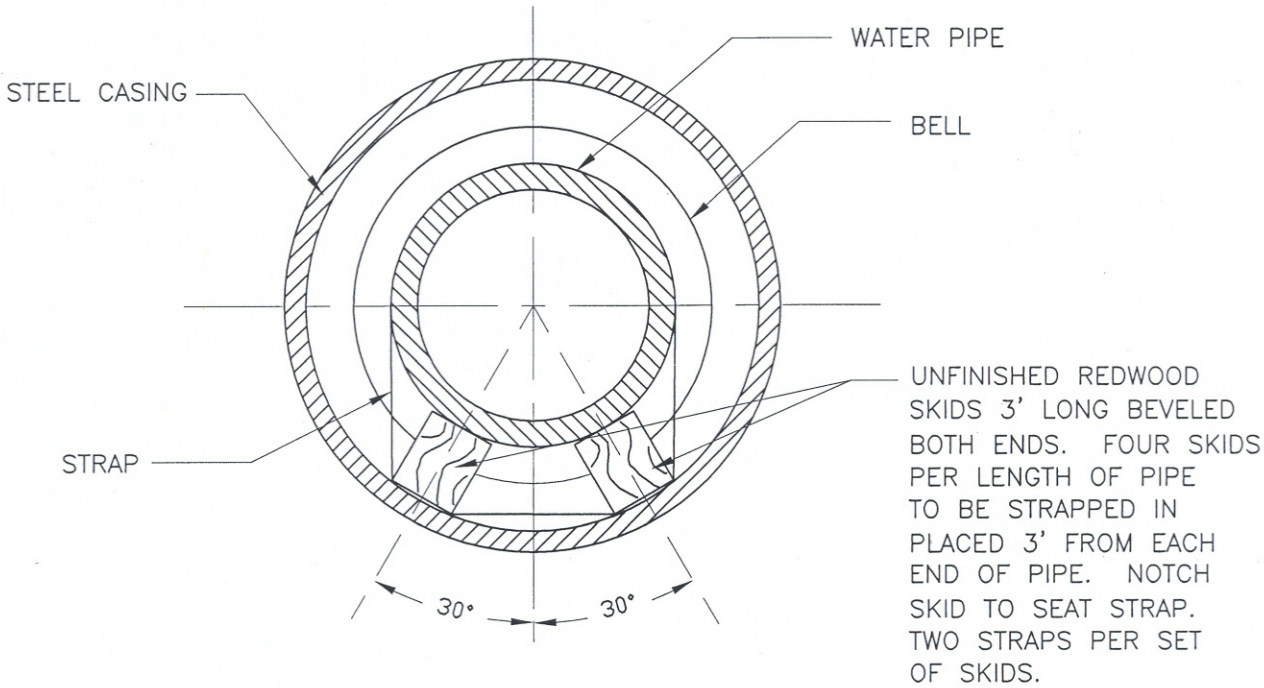

SCHEDULE STEEL CASING WITH EPOXY COATING FOR WATER PIPE				
ORIGINAL PIPE SIZE	MAXIMUM CASING SIZE	MIN. WALL	SKIDS	
4"	10" I.D.	1/4"	2"X4"	UNFINISHED REDWOOD
6"	12" I.D.	1/4"		
8"	16" I.D.	1/4"		
10"	18" I.D.	5/16"	3"X4"	
12"	20" I.D.	5/16"		

NOTES:

1. CASING SHALL BE INSTALLED BY THE TRENCH, BORE, JACK AND/OR TUNNEL METHOD. IF CASING INSTALLED BY TRENCH METHOD IT SHALL BE INSTALLED PER STD. T701.
2. REDWOOD SKIDS SHALL BE PROVIDED AS PER DETAIL ABOVE.
3. SIZE AND THICKNESS OF CASING SHALL BE AS SHOWN IN SCHEDULE ABOVE.
4. ALL CASING SECTIONS TO BE JOINED BY FULL CIRCUMFERENTIAL WELD.
5. CASING TO BE FILLED TO TOP OF BELL OF WATER PIPE WITH AIR BLOWN SAND OR SLURRY MIX.
6. ENDS OF CASING SHALL BE SEALED WITH CEMENT SLURRY MIX 100-E-100.
7. STRAPS TO BE STAINLESS STEEL.

CITY OF TORRANCE

DATE ISSUED	STEEL CASING PIPE	STANDARD NO.
JAN 2011	ROBERT J. BESTE PUBLIC WORKS DIRECTOR R.C.E. NO. 50737	T 715
		SHEET 1 OF 1

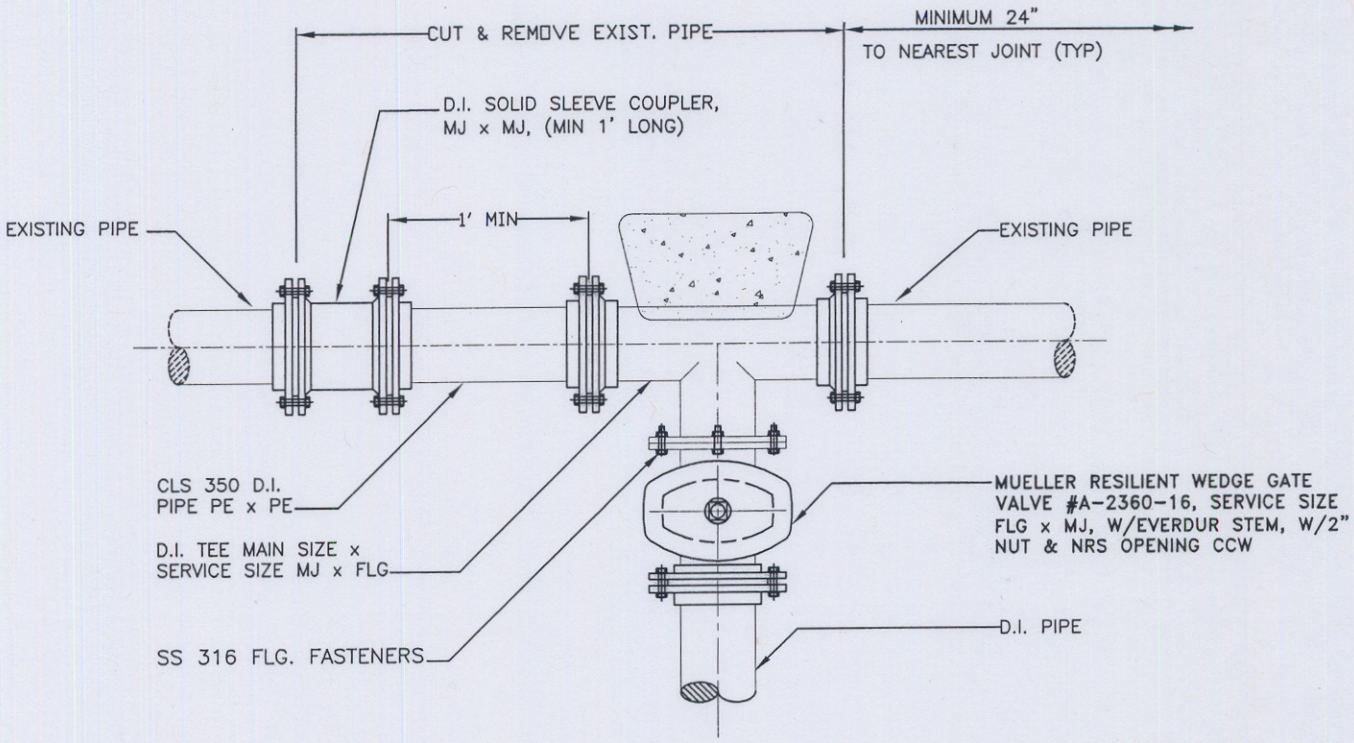

CUT IN METHOD

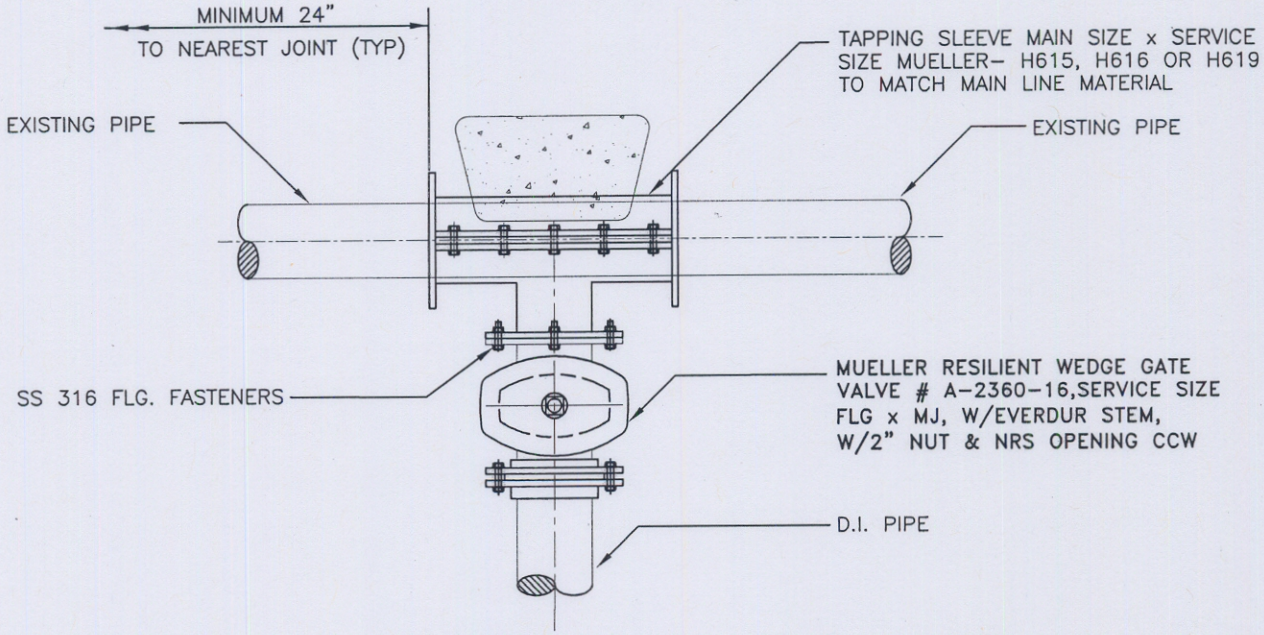

HOT TAP METHOD

ACCOMPANYING STD. T700, T701, T712, AND T713

CITY OF TORRANCE

DATE ISSUED	D.I. CONNECTION TO MAIN	STANDARD NO.
JAN 2011	ROBERT J. BESTE PUBLIC WORKS DIRECTOR R.C.E. NO. 50737	T 723 SHEET 1 OF 1

X:\ENG\VPrasad\Water Standards\T723.dwg 2/08/11 14:18 vprasad

APPENDIX IV

SPPWC STANDARD PLANS

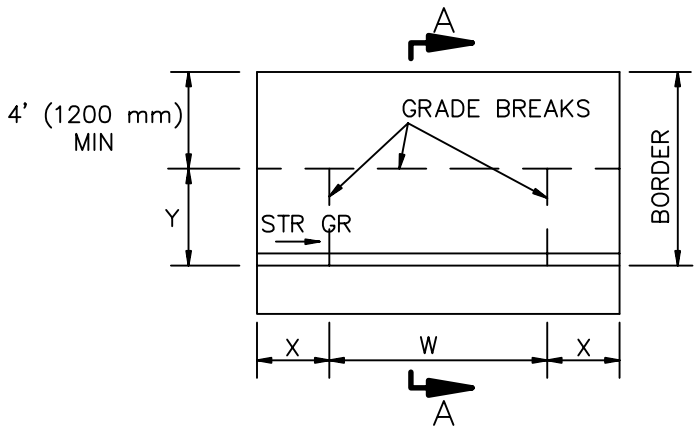

TYPE A

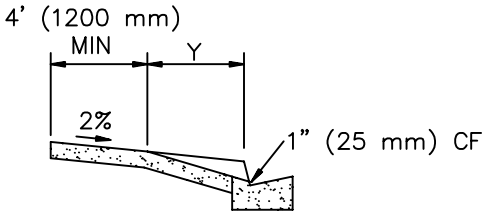

SECTION A–A

CURB FACE, inches (mm)	X, inches (mm)	Y, inches (mm)
6" (150) or less	3'–0" (900)	4'–0" (1200)
7" (175)	3'–6" (1050)	4'–9" (1425)
8" (200)	4'–0" (1200)	5'–8" (1700)
9" (225)	4'–6" (1350)	6'–6" (1950)
10" (250)	5'–0" (1500)	7'–3" (2175)
11" (275)	5'–6" (1650)	8'–0" (2400)
12" (300) or more	6'–0" (1800)	8'–9" (2625)

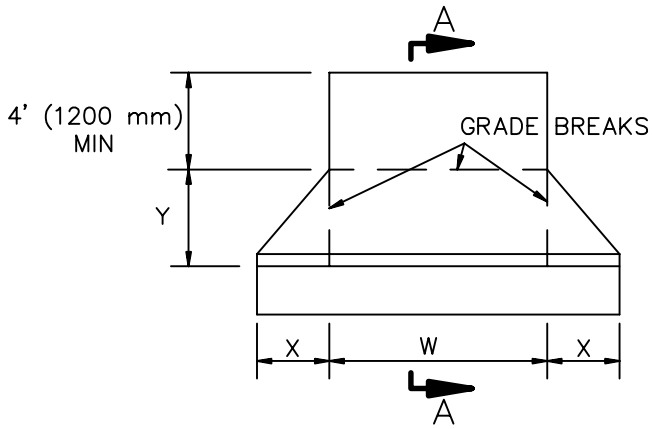

TYPE B

NOTES:

1. RESIDENTIAL DRIVEWAYS SHALL BE 4" (100 mm) THICK PCC.
2. COMMERCIAL DRIVEWAYS SHALL BE 6" (150 mm) THICK PCC.
3. WEAKENED PLANE JOINTS SHALL BE INSTALLED AT BOTH SIDES OF A DRIVEWAY AND AT 10' (3.0 m) INTERVALS.
4. CURB FOR TYPE C DRIVEWAY SHALL BE INTEGRAL AND MATCH ADJACENT CONSTRUCTION.
5. REFER TO LOCAL DEVELOPMENT REGULATIONS FOR AMERICANS WITH DISABILITIES ACCESS REQUIREMENTS AND MAXIMUM PERMITTED DRIVEWAY WIDTHS.

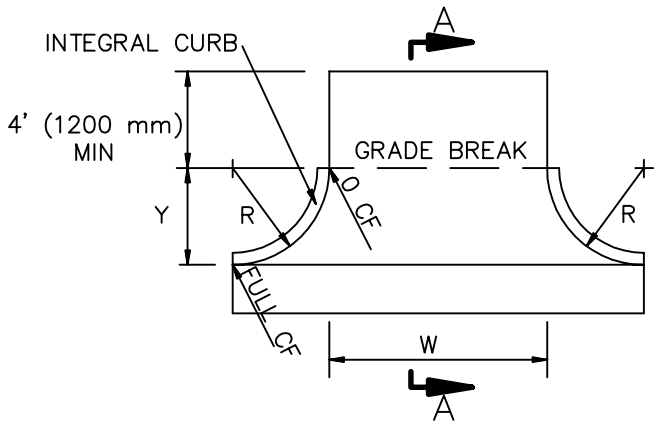

TYPE C

STANDARD PLANS FOR PUBLIC WORKS CONSTRUCTION

PROMULGATED BY THE
PUBLIC WORKS STANDARDS INC.
GREENBOOK COMMITTEE
1984
REV. 1996, 2009

DRIVEWAY APPROACHES

USE WITH STANDARD SPECIFICATIONS FOR PUBLIC WORKS CONSTRUCTION

STANDARD PLAN
110–2
SHEET 1 OF 1

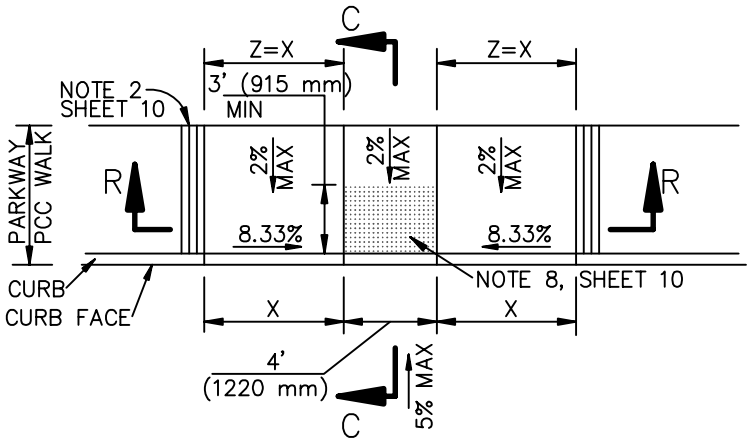

TYPE 1

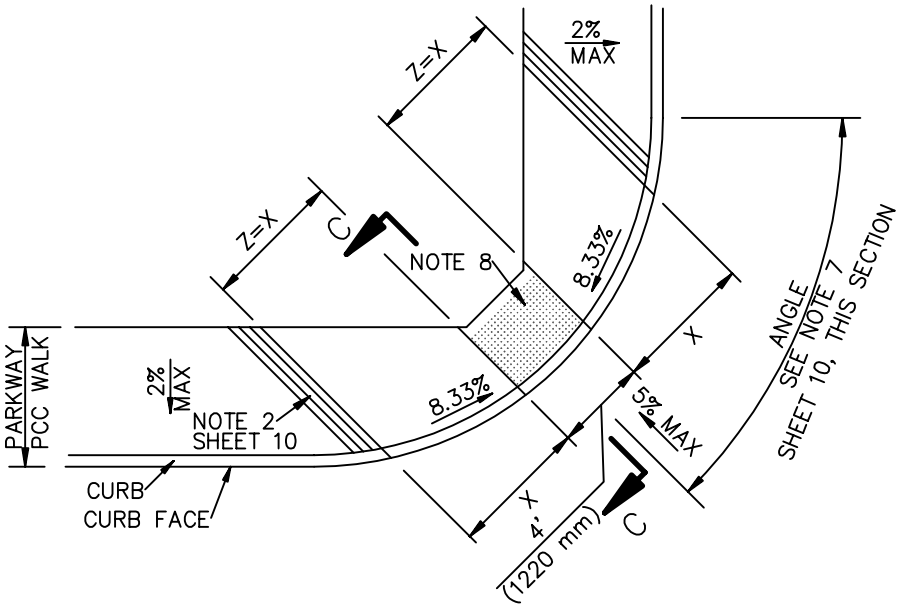

TYPE 2

CASE B

STANDARD PLANS FOR PUBLIC WORKS CONSTRUCTION	STANDARD PLAN
CURB RAMP	**111–4**
	SHEET 4 OF 10

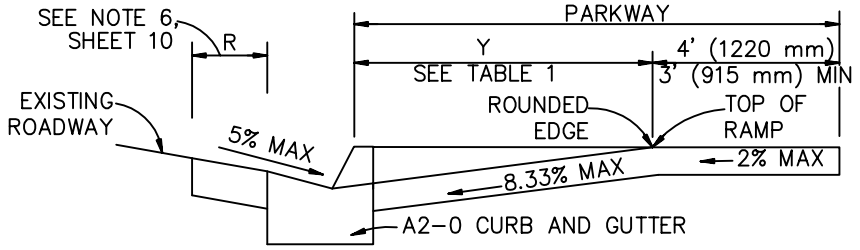

SECTION A–A

USE FIGURE 1 TO DETERMINE WHICH OF SECTIONS A–A, B–B OR C–C IS APPROPRIATE.

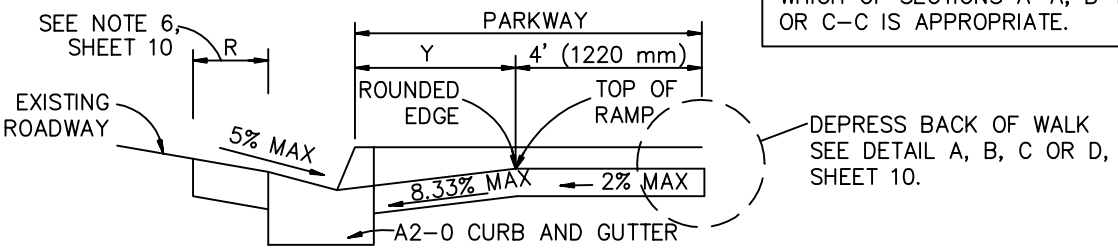

SECTION B–B

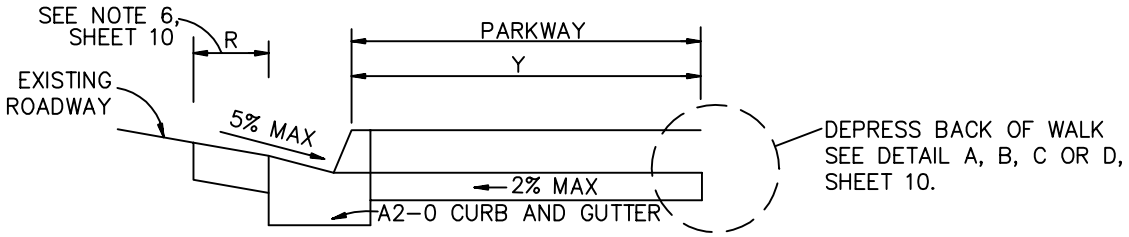

SECTION C–C

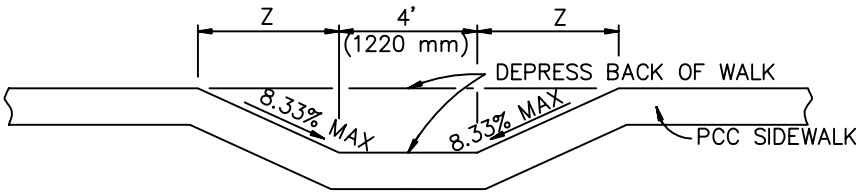

SECTION R–R

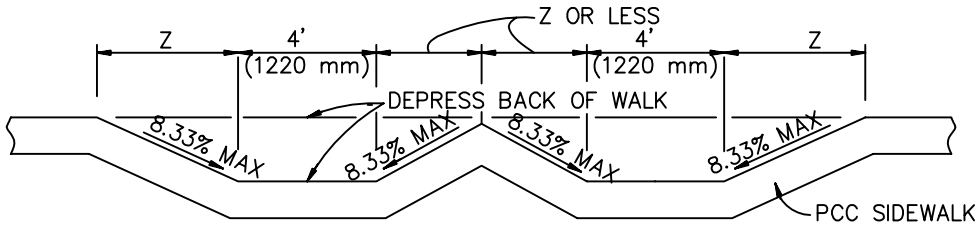

SECTION S–S

STANDARD PLANS FOR PUBLIC WORKS CONSTRUCTION	STANDARD PLAN
CURB RAMP	**111–4**
	SHEET 7 OF 10

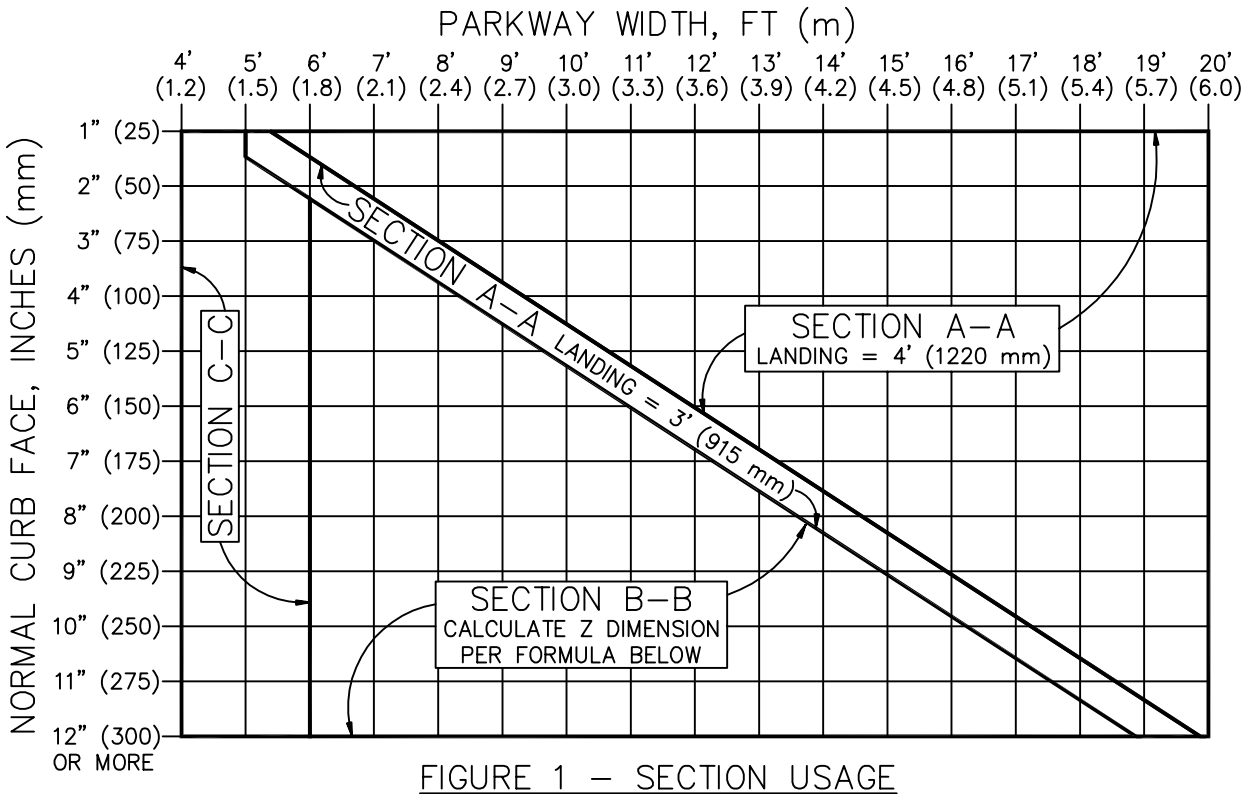

FIGURE 1 – SECTION USAGE

NORMAL CURB FACE, INCHES (mm)	X, FT (mm)	SECTION Y–Y Y, FT (mm)
2" (50)	4.00' (1200) MIN	2.63' (790)
3" (75)	4.00' (1200) MIN	3.95' (1185)
4" (100)	4.00' (1200)	5.26' (1580)
5" (125)	5.00' (1500)	6.58' (1975)
6" (150)	6.00' (1800)	7.90' (2370)
7" (175)	7.00' (2100)	9.21' (2765)
8" (200)	8.00' (2400)	10.53' (3160)
9" (225)	9.00' (2700)	11.84' (3555)
10" (250)	10.00' (3000)	13.16' (3950)
11" (275)	11.00' (3300)	14.47' (4340)
12" (300)	12.00' (3600)	15.79' (4735)

SEE SHEET 9 FOR STREET SLOPE ADJUSTMENT FACTORS, ALL STREETS

TABLE 1 – X AND Y VALUES

TABLE 1 REFERENCE FORMULAS:
X = CF / 8.333%
Y = CF / (8.333% – 2% WALK CROSS SLOPE)

WHERE FIGURE 1 SHOWS USE OF SECTION B–B, FIGURE Z DIMENSION AS FOLLOWS:

W = PARKWAY WIDTH
L = LANDING WIDTH, 4' (1220 mm) TYP, 3' (915 mm) MIN

Z = [(Y+L)–W] x 0.760

IF (Y+L) < W, THEN Z = 0

TABLE 1 SHOWS X FOR A FLARE SLOPE OF 8.33% AT THE CURB FACE. IF L IS 4' (1220 mm) OR MORE, X MAY BE MULTIPLIED BY 0.833 FOR A MAXIMUM FLARE SLOPE OF 10% AT THE CURB FACE.

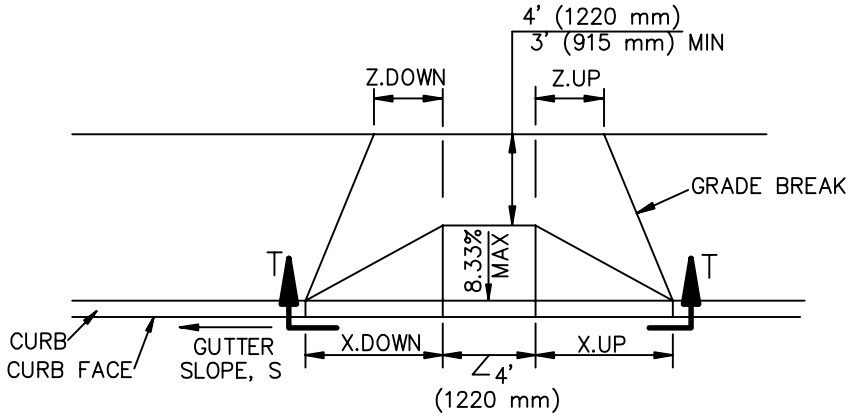

TYPICAL CURB RAMP

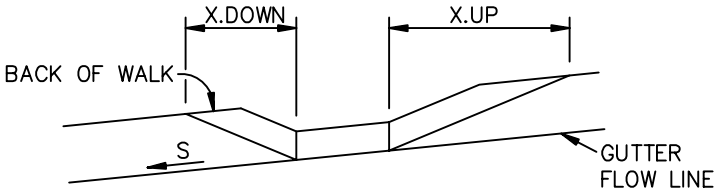

SECTION T–T
SLOPED STREET

FOR SLOPED STREETS, MULTIPLY THE DIMENSIONS PARALLEL TO THE STREET, X AND Z, UPSTREAM AND DOWNSTREAM OF THE RAMP, BY THE FACTORS IN THE FOLLOWING TABLE.

FOR EXAMPLE, X.DOWN = X x K.DOWN

S	K.DOWN	K.UP
0%	1.000	1.000
0.2%	0.977	1.025
0.5%	0.943	1.064
1%	0.893	1.136
2%	0.806	1.316
3%	0.735	1.563
4%	0.676	1.923
5%	0.625	2.500

TABLE 2 – SLOPE ADJUSTMENTS

TABLE 2 REFERENCE FORMULAS:
K.DOWN = 8.333% / (8.333% + S)
K.UP = 8.333% / (8.333% – S)

STREET SLOPE ADJUSTMENTS

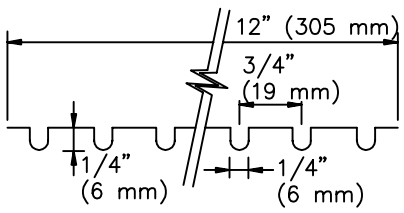

GROOVING DETAIL

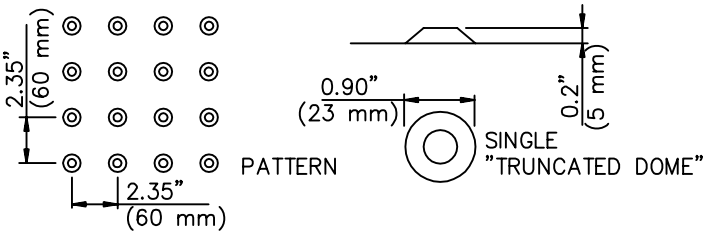

DETECTABLE WARNING DETAIL

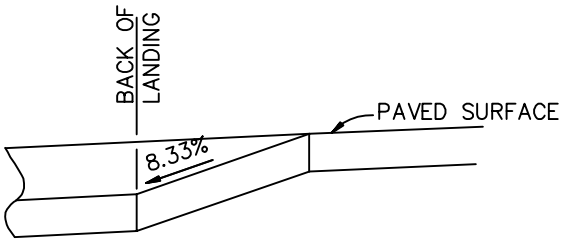

DETAIL A

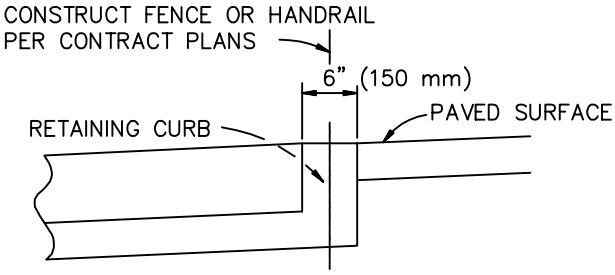

DETAIL B

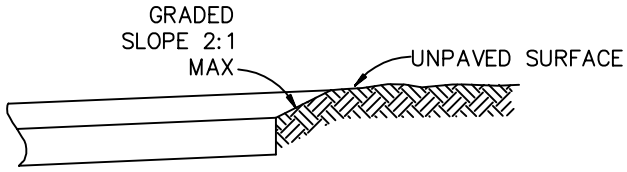

DETAIL C

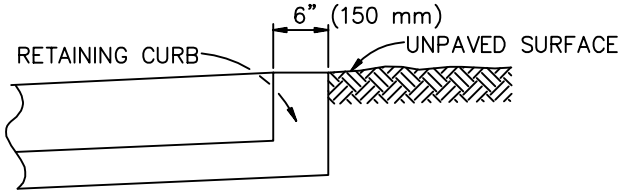

DETAIL D

GENERAL NOTES:

1. CONCRETE SHALL BE CLASS 520-C-2500 (310-C-17) CONFORMING TO SSPWC 201-1.1.2 AND SHALL BE 4" (100 mm) THICK.
2. THE RAMP SHALL HAVE A 12" (305 mm) WIDE BORDER WITH 1/4" (6 mm) GROOVES APPROXIMATELY 3/4" (19 mm) OC. SEE GROOVING DETAIL.
3. THE RAMP SURFACE SHALL HAVE A TRANSVERSE BROOMED SURFACE TEXTURE CONFORMING TO SSPWC 303-1.9.
4. USE DETAIL "A" OR B" IF EXISTING SURFACE BEHIND LANDING IS PAVED.
5. USE DETAIL "C" OR D" IF EXISTING SURFACE BEHIND LANDING IS UNPAVED.
6. R = 3' (900 mm) UNLESS OTHERWISE SHOWN ON PLAN.
7. ANGLE = $\Delta/2$ UNLESS OTHERWISE SHOWN ON PLAN.
8. CONSTRUCT DETECTABLE WARNING SURFACE PER DETAIL THIS SHEET. MATERIALS SHALL BE PER CONTRACT DOCUMENTS.

STANDARD PLANS FOR PUBLIC WORKS CONSTRUCTION	STANDARD PLAN
CURB RAMP	**111-4**
	SHEET 10 OF 10

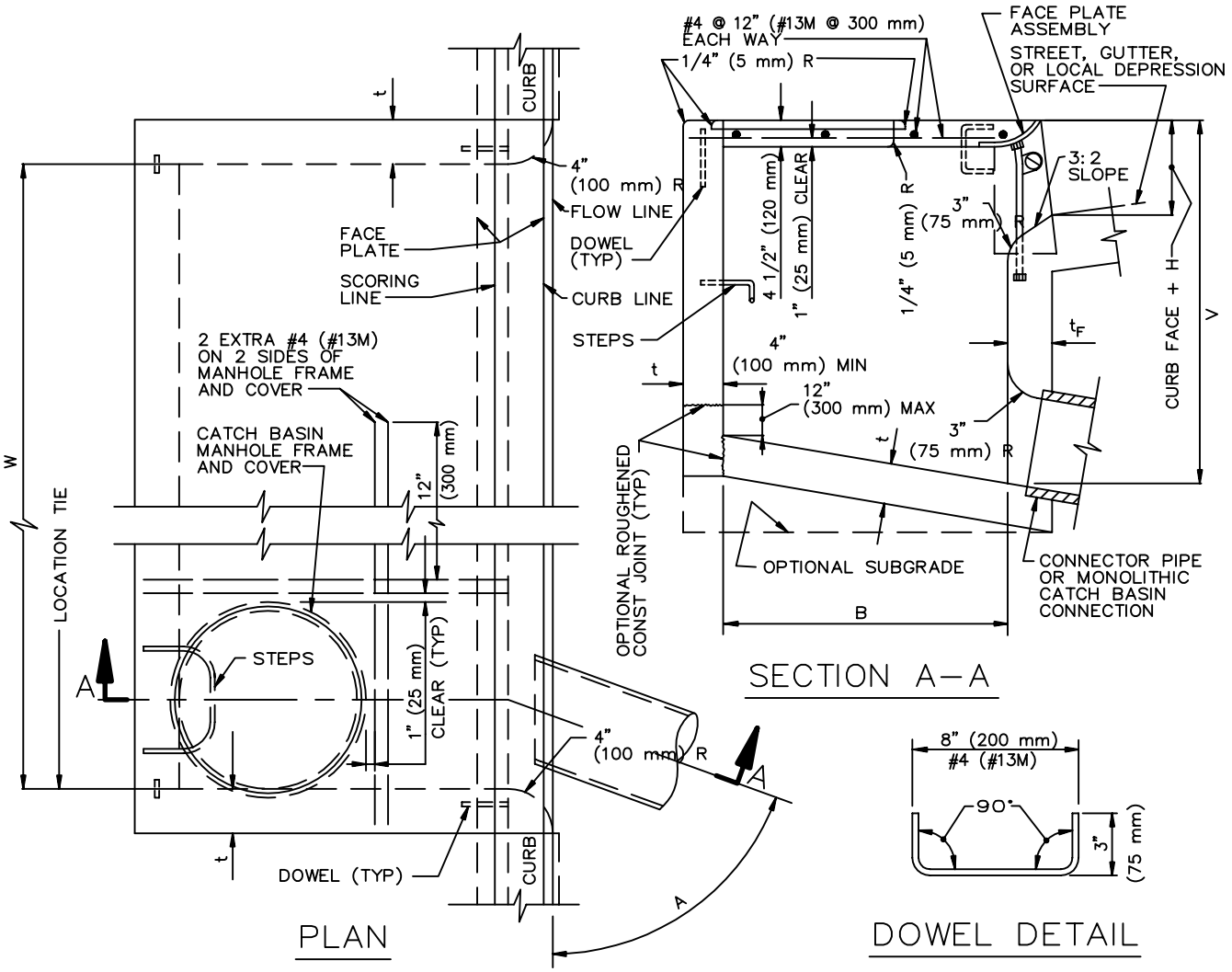

STRUCTURAL DATA

WALL AND SLAB DIMENSIONS AND REINFORCEMENT REQUIREMENTS

MAX W	MAX V	t	t_F	REINFORCEMENT REQUIRED IN: FRONT WALL	REAR WALL	BOTTOM SLAB	END WALL
3.5' (1.0 m)	8' (2.4 m)	6" (150 mm)	6" (150 mm)	NO REINFORCEMENT REQUIRED			
3.5' (1.0 m)	12' (3.5 m)	8" (200 mm)	8" (200 mm)				
7' (2.0 m)	6' (1.8 m)	6" (150 mm)	6" (150 mm)				
7' (2.0 m)	12' (3.5 m)	8" (200 mm)	8" (200 mm)				
14' (4.0 m)	4' (1.2 m)	6" (150 mm)	6" (150 mm)	REINFORCEMENT REQUIRED			
↕	8' (2.4 m)	6" (150 mm)	8" (200 mm)				
14' (4.0 m)	12' (3.5 m)	8" (200 mm)	10" (250 mm)				
6 m (21') AND 9 m (28')	4' (1.2 m)	6" (150 mm)	6" (150 mm)			REQUIRED	
	6' (1.8 m)	6" (150 mm)	8" (200 mm)				
	8' (2.4 m)	8" (200 mm)	8" (200 mm)				
	10' (3.0 m)	8" (200 mm)	10" (250 mm)				
	12' (3.5 m)	8" (200 mm)	10" (250 mm)				

FOR W > 28' (9 m), V > 12' (3.5 m) OR B > 4' (1.2 m) SEE PLANS

STANDARD PLANS FOR PUBLIC WORKS CONSTRUCTION

PROMULGATED BY THE PUBLIC WORKS STANDARDS, INC., GREENBOOK COMMITTEE 1984 REV. 1992, 1996, 2009

CURB OPENING CATCH BASIN

USE WITH STANDARD SPECIFICATIONS FOR PUBLIC WORKS CONSTRUCTION

STANDARD PLAN 300–3

SHEET 1 OF 2

NOTES:

1. WHERE THE BASIN IS TO BE CONSTRUCTED WITHIN THE LIMITS OF EXISTING OR PROPOSED SIDEWALK OR IS CONTIGUOUS TO SUCH SIDEWALK, THE TOP SLAB OF THE BASIN MAY BE POURED EITHER MONOLITHIC WITH THE SIDEWALK OR SEPARATELY, USING THE SAME CLASS OF CONCRETE AS IN THE BASIN. WHEN POURED MONOLITHICALLY, THE SIDEWALK SHALL BE PROVIDED WITH A WEAKENED PLANE OR A 1" (25 mm) DEEP SAWCUT CONTINUOUSLY AROUND THE EXTERNAL PERIMETER OF THE CATCH BASIN WALLS, INCLUDING ACROSS THE FULL WIDTH OF THE SIDEWALK. SURFACE OF ALL EXPOSED CONCRETE SHALL CONFORM IN SLOPE, GRADE, COLOR, FINISH, AND SCORING TO EXISTING OR PROPOSED CURB AND WALK ADJACENT TO THE BASIN.

2. ALL CURVED CONCRETE SURFACES SHALL BE FORMED BY CURVED FORMS, AND SHALL NOT BE SHAPED BY PLASTERING.

3. FLOOR OF BASIN SHALL BE GIVEN A STEEL TROWEL FINISH AND SHALL HAVE A LONGITUDINAL AND LATERAL SLOPE OF 1:12 MINIMUM AND 1:3 MAXIMUM, EXCEPT WHERE THE GUTTER GRADE EXCEEDS 8%, IN WHICH CASE THE LONGITUDINAL SLOPE OF THE FLOOR SHALL BE THE SAME AS THE GUTTER GRADE. SLOPE FLOOR FROM ALL DIRECTIONS TO THE OUTLET.

4. DIMENSIONS:

   B = 3'–2" (970 mm)

   V = THE DIFFERENCE IN ELEVATION BETWEEN THE TOP OF THE CURB AND THE INVERT OF THE CATCH BASIN AT THE OUTLET = 4.5' (1.35 m).

   V_U= THE DIFFERENCE IN ELEVATION BETWEEN THE TOP OF THE CURB AND THE INVERT AT THE UPSTREAM END OF THE BASIN, AND SHALL BE DETERMINED BY THE REQUIREMENTS OF NOTE 3, BUT SHALL NOT BE LESS THAN CURB FACE PLUS 12" (300 mm).

   V_I = THE DIFFERENCE IN ELEVATION BETWEEN THE TOP OF THE CURB AND THE INVERT OF THE INLET, NOTED ON THE PLANS.

   H = NOTED ON THE PLANS.

   W = NOTED ON THE PLANS.

   A = THE ANGLE, IN DEGREES, INTERCEPTED BY THE CENTERLINE OF THE CONNECTOR PIPE AND THE CATCH BASIN WALL TO WHICH THE CONNECTOR PIPE IS ATTACHED.

5. PLACE CONNECTOR PIPES AS INDICATED ON THE PLANS. UNLESS OTHERWISE SPECIFIED, THE CONNECTOR PIPE SHALL BE LOCATED AT THE DOWNSTREAM END OF THE BASIN. WHERE THE CONNECTOR PIPE IS SHOWN AT A CORNER, THE CENTERLINE OF THE PIPE SHALL INTERSECT THE INSIDE CORNER OF THE BASIN. THE PIPE MAY BE CUT AND TRIMMED AT A SKEW NECESSARY TO INSURE MINIMUM 3" (80 mm) PIPE EMBEDMENT, ALL AROUND, WITHIN THE CATCH BASIN WALL, AND 3" (75 mm) RADIUS OF ROUNDING OF STRUCTURE CONCRETE, ALL AROUND, ADJACENT TO PIPE ENDS. A MONOLITHIC CATCH BASIN CONNECTION SHALL BE USED TO JOIN THE CONNECTOR PIPE TO THE CATCH BASIN WHENEVER ANGLE "A" IS LESS THAN 70° OR GREATER THAN 110°, OR WHENEVER THE CONNECTOR PIPE IS LOCATED IN A CORNER. THE OPTIONAL USE OF A MONOLITHIC CATCH BASIN CONNECTION IN ANY CASE IS PERMITTED. MONOLITHIC CATCH BASIN CONNECTIONS MAY BE CONSTRUCTED TO AVOID CUTTING STANDARD LENGTHS OF PIPE.

6. STEPS SHALL BE LOCATED AS SHOWN. IF THE CONNECTOR PIPE INTERFERES WITH THE STEPS, THEY SHALL BE LOCATED AT THE CENTERLINE OF THE DOWNSTREAM END WALL. STEPS SHALL BE SPACED 12" (300 mm) APART. THE TOP STEP SHALL BE 7" (175 mm) BELOW THE TOP OF THE MANHOLE AND PROJECT 2–1/2" (65 mm). ALL OTHER STEPS SHALL PROJECT 5" (130 mm).

7. DOWELS ARE REQUIRED AT EACH CORNER AND AT 7' (2 m) ON CENTER (MAXIMUM) ALONG THE BACKWALL.

8. THE FOLLOWING SPPWC ARE INCORPORATED HEREIN:

   308 MONOLITHIC CATCH BASIN CONNECTION
   309 CATCH BASIN REINFORCEMENT
   310 CATCH BASIN FACE PLATE ASSEMBLY AND PROTECTION BAR
   312 CATCH BASIN MANHOLE FRAME AND COVER
   635 STEEL STEP
   636 POLYPROPYLENE PLASTIC STEP

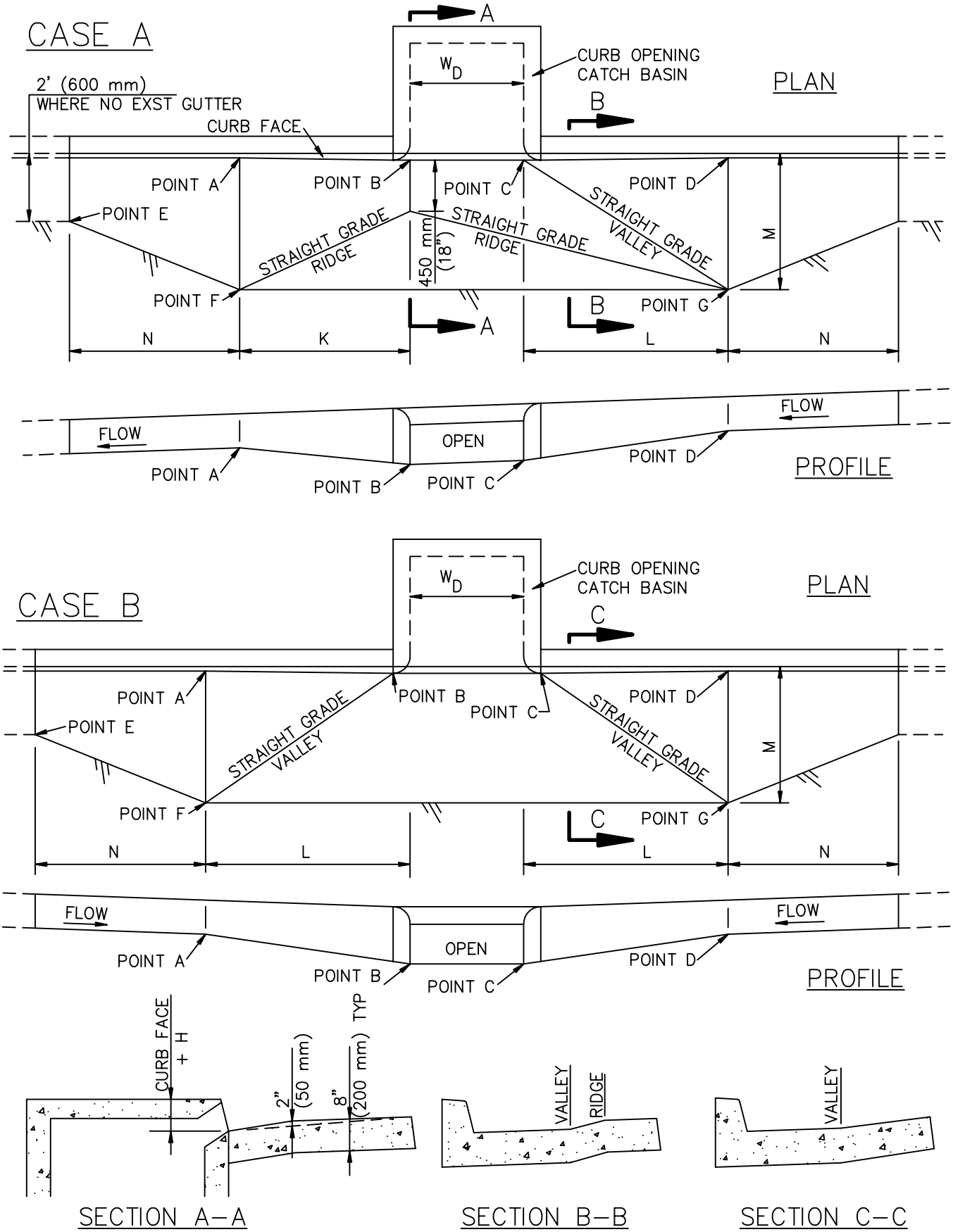

STANDARD PLANS FOR PUBLIC WORKS CONSTRUCTION

PROMULGATED BY THE
PUBLIC WORKS STANDARDS INC.
GREENBOOK COMMITTEE
1984
REV. 1996, 2005, 2009

LOCAL DEPRESSIONS AT CATCH BASINS

USE WITH STANDARD SPECIFICATIONS FOR PUBLIC WORKS CONSTRUCTION

STANDARD PLAN
313–3
SHEET 1 OF 4

CASE C

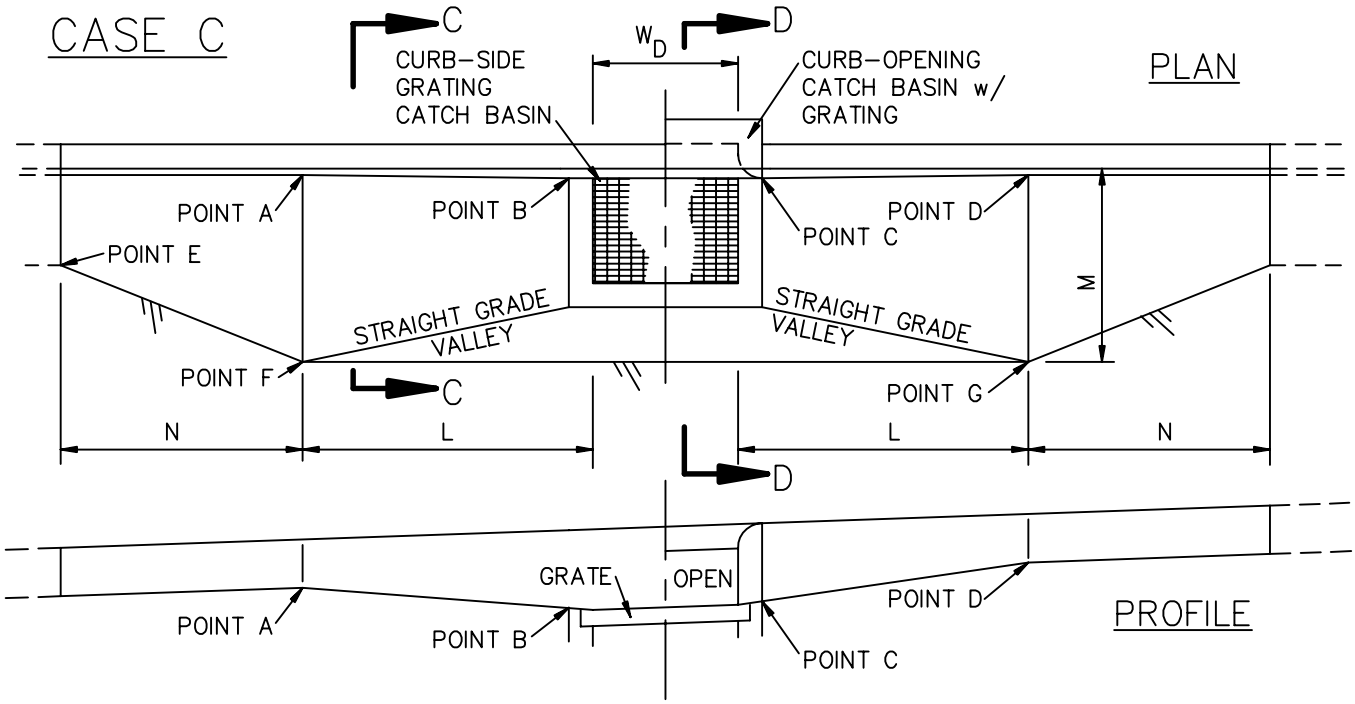

CASE D

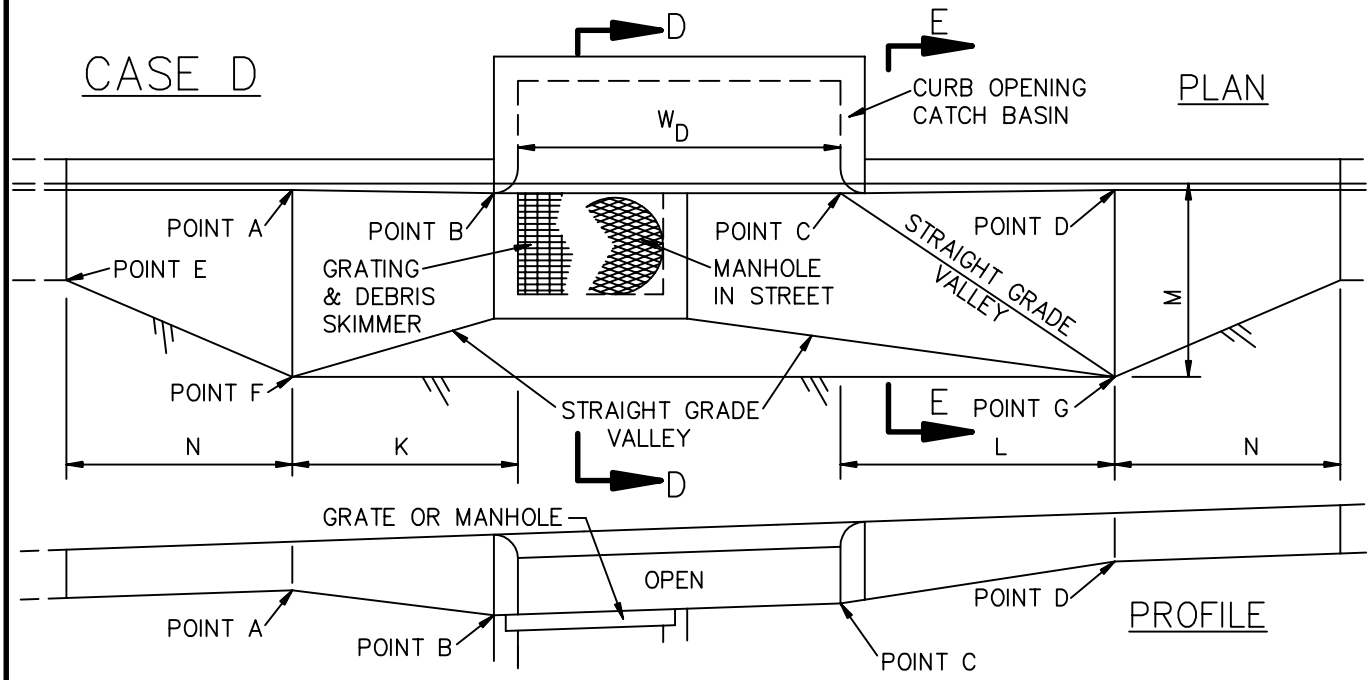

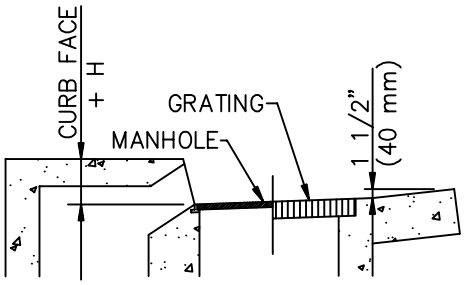

SECTION D–D

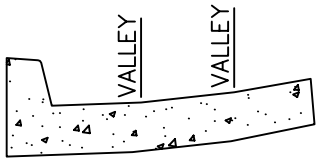

SECTION E–E

STANDARD PLANS FOR PUBLIC WORKS CONSTRUCTION

LOCAL DEPRESSIONS AT CATCH BASINS

STANDARD PLAN

313–3

SHEET 2 OF 4

CASE E

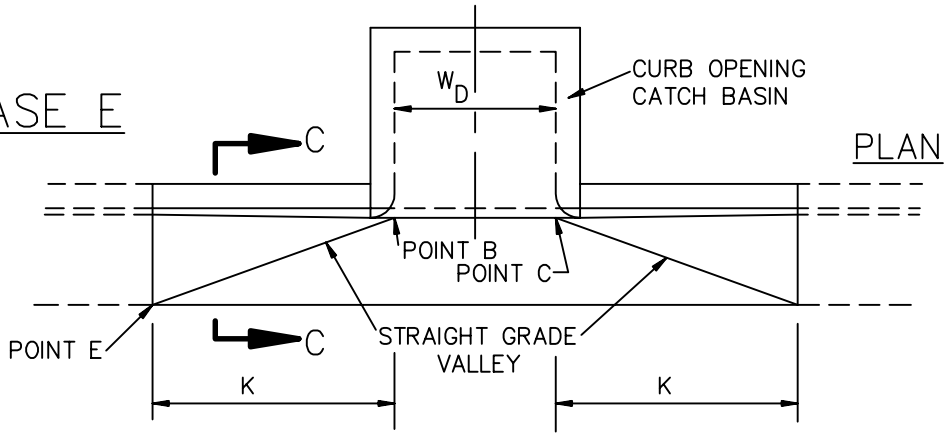

CASE F

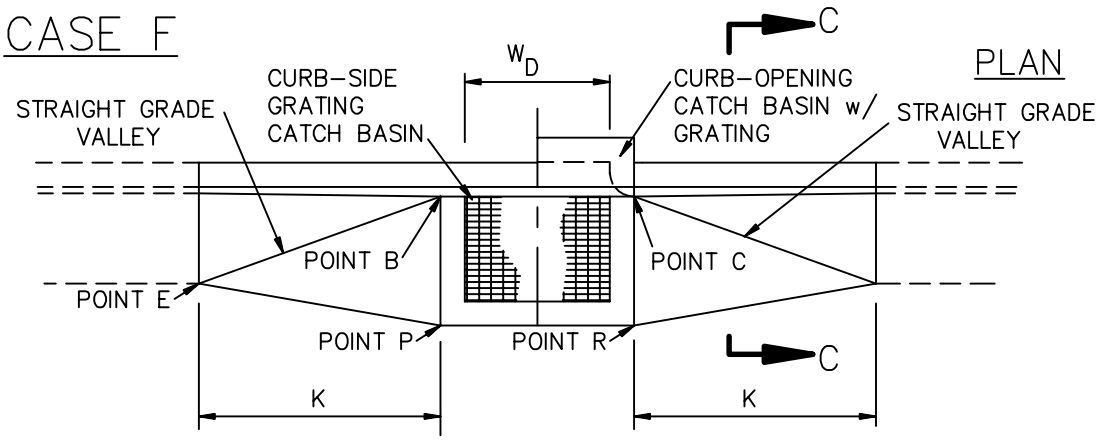

CASE G

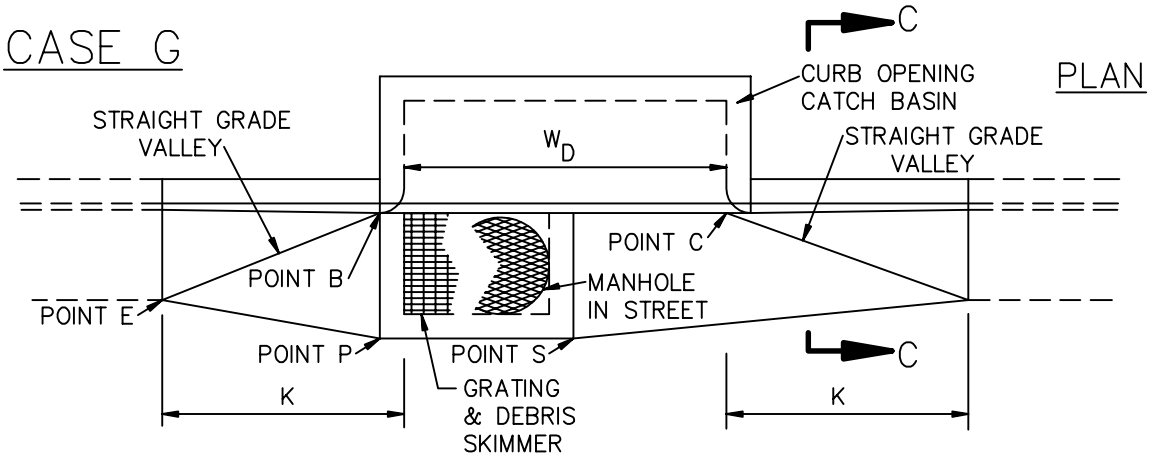

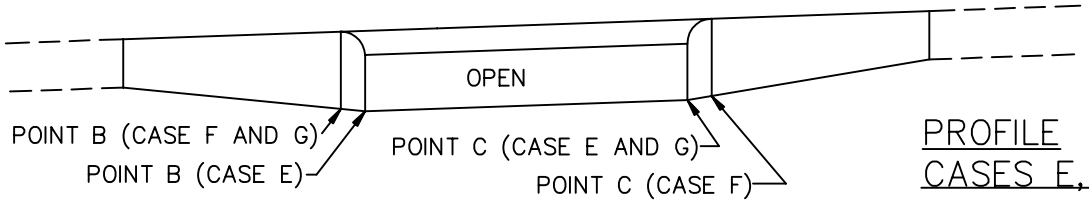

PROFILE
CASES E, F, G

STANDARD PLANS FOR PUBLIC WORKS CONSTRUCTION	STANDARD PLAN
LOCAL DEPRESSIONS AT CATCH BASINS	**313–3**
	SHEET 3 OF 4

NOTES:

1. ALL EXPOSED EDGES SHALL BE ROUNDED TO A 1/2" (15 mm) RADIUS.

2. THE CURB FACE AT POINTS A AND D SHALL BE THE NORMAL CURB FACE OF THE ADJACENT CURB. AT POINTS B AND C, THE CURB FACE SHALL BE THE NORMAL CURB FACE OF THE ADJACENT CURB PLUS H. (SEE APPLICABLE CATCH BASIN STANDARD PLAN.)

3. IN EXISTING STREETS WHERE NO PAVEMENT RECONSTRUCTION IS SPECIFIED ON THE PLANS, THE ELEVATION OF THE OUTER EDGE OF THE LOCAL DEPRESSION SHALL MEET THE FINISHED STREET SURFACE.

4. IN NEW STREETS OR IN EXISTING STREETS WHERE PAVEMENT RECONSTRUCTION IS SPECIFIED ON THE PLANS:

   THE ELEVATIONS OF POINTS F AND G SHALL BE SET H1 HIGHER THAN THE GUTTER FLOW LINE ELEVATIONS AT POINTS A AND D, RESPECTIVELY.

   THE ELEVATIONS OF POINTS P AND R SHALL BE SET H2 HIGHER THAN THE GUTTER FLOW LINE ELEVATIONS AT POINTS B AND C, RESPECTIVELY.

   THE ELEVATION OF POINT S SHALL BE SET H2 HIGHER THAN THE ELEVATION AT THE NEAREST GUTTER FLOW LINE.

   WHERE THERE IS NO GUTTER ADJACENT TO THE LOCAL DEPRESSION, THE ELEVATION OF POINT E SHALL BE SET H3 HIGHER THAN THE ELEVATION AT THE NEAREST TOE OF CURB.

5. DIMENSIONS:

   H, H1, H2 AND H3 SHALL BE AS NOTED ON THE PLANS.

   G = 24" (600 mm)

   K = 5'–0" (1500 mm)

   L = 6'–0" (1800 mm)

   M = 4'–0" (1200 mm)

   N = 5'–0" (1500 mm)

   W_D = CATCH BASIN W FOR SINGLE CATCH BASIN OR DISTANCE BETWEEN EXTREME END WALLS FOR MULTIPLE CATCH BASINS.

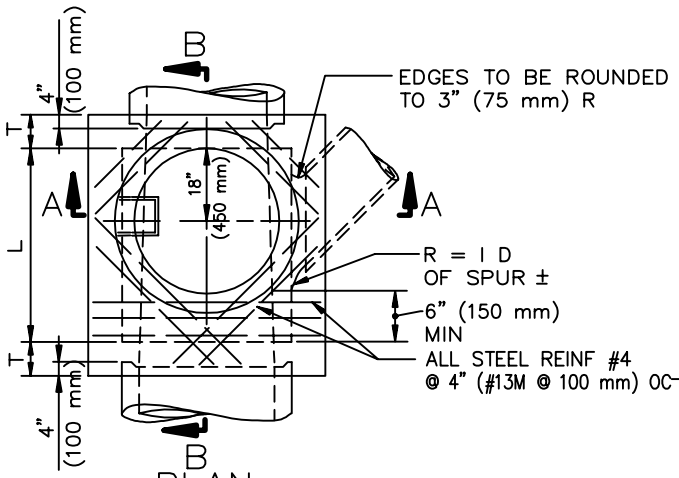

PLAN
(SHAFT NOT SHOWN)

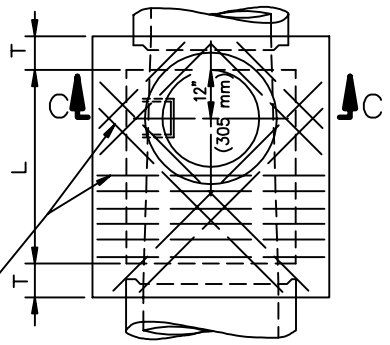

DETAIL "N" PLAN
(RINGS AND COVER NOT SHOWN)
SEE NOTE 1

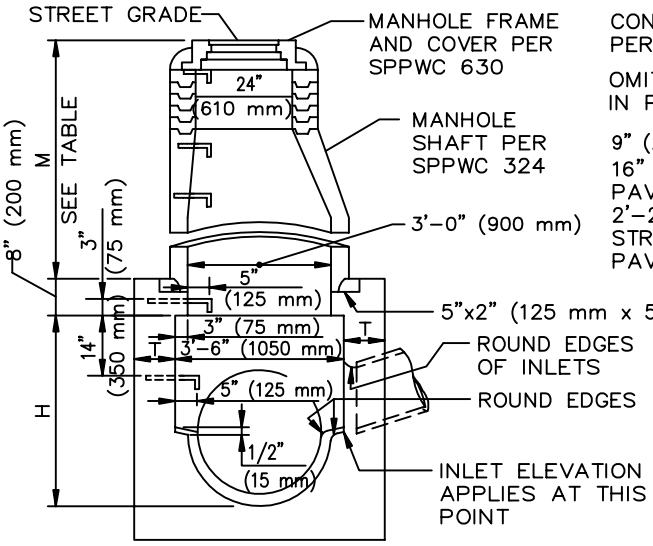

SECTION A–A

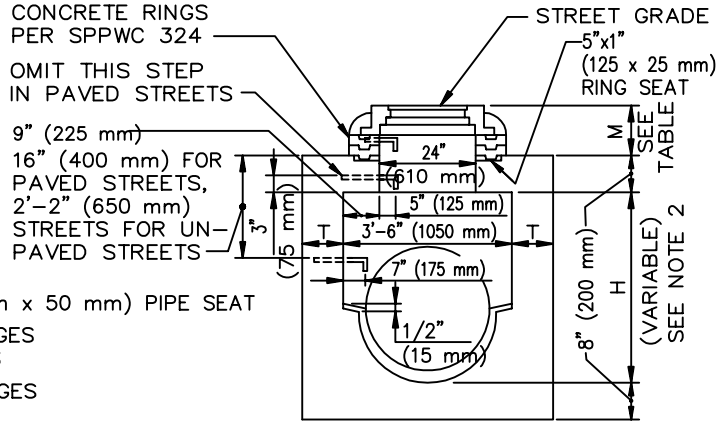

SECTION C–C

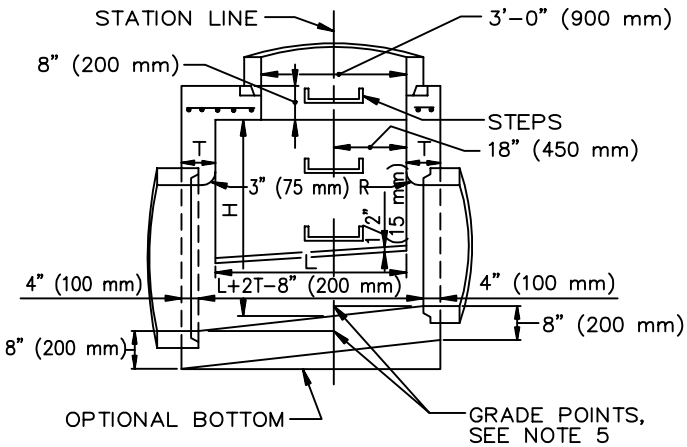

SECTION B–B

TABLE OF VALUES FOR M (SEE NOTE 1)				
SECTION	PAVED STREET		UNPAVED STREET	
	MAX	MIN	MAX	MIN
A–A		2'-10 1/2" (867 mm)		3'-6" (1060 mm)
C–C	11" (282 mm)	8 1/2" (217 mm)	16" (410 mm)	15" (380 mm)

STANDARD PLANS FOR PUBLIC WORKS CONSTRUCTION

PROMULGATED BY THE PUBLIC WORKS STANDARDS INC. GREENBOOK COMMITTEE 1992 REV. 1996, 2009

MANHOLE PIPE–TO–PIPE (ONE OR BOTH MAIN LINE IDS 33" (825 mm) OR SMALLER)

USE WITH STANDARD SPECIFICATIONS FOR PUBLIC WORKS CONSTRUCTION

STANDARD PLAN
321–2
SHEET 1 OF 3

NOTES

1. WHEN DEPTH M FROM STREET GRADE TO THE TOP OF THE BOX IS LESS THAN 2'–10 1/2" (867 mm) FOR PAVED STREETS OR 3'–6" (1060 mm) FOR UNPAVED STREETS, CONSTRUCT SHAFT PER SECTION C–C AND DETAIL "N". DEPTH M MAY BE REDUCED TO AN ABSOLUTE LIMIT OF 6" (150 mm) WHEN LARGER VALUES OF M WOULD REDUCE H IN SECTION C–C TO 3'–6" (1060 mm) OR LESS.

2. H (IN SECTION A–A AND B–B) SHALL NOT BE LESS THAN 4'–0" (1.2 m), BUT MAY BE INCREASED PROVIDED THAT THE VALUE OF M SHALL NOT BE LESS THAN THE MINIMUM SPECIFIED AND THAT THE REDUCER SHALL BE USED. FOR H (IN SECTION C–C) SEE NOTE 1.

3. L SHALL BE 4'–0" (1.2 m) UNLESS OTHERWISE SHOWN. L MAY BE INCREASED OR LOCATION OF MANHOLE SHIFTED TO MEET PIPE ENDS, BUT ANY CHANGE IN LOCATION OF THE SPUR MUST BE APPROVED BY THE ENGINEER.

4. T SHALL BE 8" (200 mm) FOR VALUES OF H UP TO AND INCLUDING 8'–0" (2.4 m) AND 10" (250 mm) FOR VALUES OF H OVER 8'–0" (2.4 m).

5. STATIONS OF MANHOLES SHOWN ON PLANS APPLY AT CENTERLINE OF SHAFT. ELEVATIONS ARE SHOWN AT CENTERLINE OF SHAFT AND REFER TO THE PROLONGED INVERT GRADE LINES. SEE NOTE 3.

6. REINFORCEMENT SHALL CONFORM TO ASTM A 615, GRADE 40 (ASTM A 615M, GRADE 300), AND SHALL TERMINATE 1 1/2" (40 mm) CLEAR OF CONCRETE SURFACES UNLESS OTHERWISE SHOWN.

7. FLOOR OF MANHOLE SHALL BE STEEL TROWELED TO SPRING LINE.

8. BODY OF MANHOLE SHALL BE POURED IN ONE CONTINUOUS OPERATION EXCEPT THAT A CONSTRUCTION JOINT WITH A LONGITUDINAL KEYWAY MAY BE PLACED AT SPRING LINE.

9. THICKNESS OF THE DECK SHALL VARY WHEN NECESSARY TO PROVIDE A LEVEL SEAT BUT SHALL NOT BE LESS THAN 8" (200 mm).

10. STEPS SHALL CONFORM TO SPPWC 635 OR 636. UNLESS OTHERWISE SHOWN, STEPS SHALL BE UNIFORMLY SPACED 14" (350 mm) TO 15" (375 mm) OC. THE LOWEST STEP SHALL NOT BE MORE THAN 24" (600 mm) ABOVE THE LEDGE AT THE SIDE OF THE MANHOLE.

11. THE FOLLOWING CRITERIA SHALL BE USED FOR THIS MANHOLE:

    A. MAIN LINE = 33" (825 mm) INSIDE DIAMETER OR LESS. (EXCEPTION – IF THE MAIN LINE RCP DOWNSTREAM OF THE MANHOLE IS 36" (900 mm) TO 42" (1050 mm) INSIDE DIAMETER AND THE MAIN LINE RCP UPSTREAM IS 33" (825 mm) OR LESS.) SPPWC 320 OR 322 IS NOT APPLICABLE WHERE THE MAIN LINE CONDUIT IS LESS THAN 36" (900 mm) IN DIAMETER.

    B. SEE SECTION A – A. THE MAXIMUM SIZE LATERAL THAT MAY BE CONNECTED TO THIS MANHOLE IS SUCH THAT THE DISTANCE FROM THE OUTSIDE (TOP) OF THE LATERAL TO THE BOTTOM OF THE 8" (200 mm) THICK TOP OF THE MANHOLE CHAMBER, MEASURED VERTICALLY FROM THE END OF THE RCP, SHALL BE A MINIMUM OF 6" (150 mm).

    C. IF THE SIZE OF THE LATERAL IS SUCH THAT THE ABOVE–SPECIFIED MINIMUM DISTANCES CANNOT BE MAINTAINED, THEN ONE OF THE FOLLOWING ALTERNATE SOLUTIONS MUST BE USED.

        1. PROVIDE A SPECIAL STRUCTURE.

        2. PROVIDE TWO STANDARD STRUCTURES, CONSISTING OF THIS MANHOLE PLACED UPSTREAM OR DOWNSTREAM FROM THE APPLICABLE JUNCTION STRUCTURE OR TRANSITION STRUCTURE.

12. MANHOLE FRAME AND COVER SHALL CONFORM TO SPPWC 630 UNLESS OTHERWISE SHOWN.

13. MANHOLE SHAFT SHALL CONFORM TO SPPWC 324 UNLESS OTHERWISE SHOWN.

14. WHERE A MANHOLE SHAFT – 36" (900 mm) WITHOUT REDUCER IS SPECIFIED REFER TO SPPWC 336.

15. WHERE A PRESSURE MANHOLE SHAFT – WITH ECCENTRIC REDUCER IS SPECIFIED REFER TO SPPWC 328.

16. WHERE A PRESSURE MANHOLE SHAFT – 36" (900 mm) WITHOUT REDUCER IS SPECIFIED REFER TO SPPWC 329.

17. THE FOLLOWING SPPWC ARE INCORPORATED HEREIN:
    324 MANHOLE SHAFT – WITH ECCENTRIC REDUCER
    326 MANHOLE SHAFT – 36" (900 mm) WITHOUT REDUCER
    328 PRESSURE MANHOLE SHAFT – WITH ECCENTRIC
    329 PRESSURE MANHOLE SHAFT – 36" (900 mm) WITHOUT REDUCER
    630 24" (610 mm) MANHOLE FRAME AND COVER
    633 36" (900 mm) MANHOLE FRAME AND COVER
    635 STEEL STEP
    636 POLYPROPYLENE PLASTIC STEP

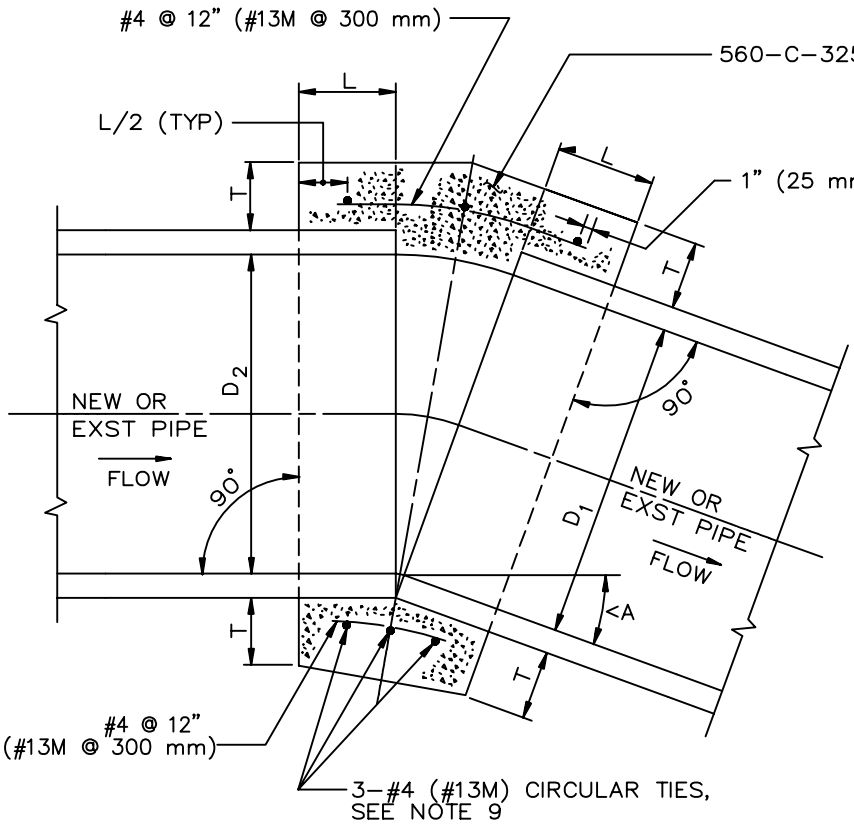

D	L	T
12" (300 mm)	12" (300 mm)	4" (100 mm)
18" (450 mm)	12" (300 mm)	5" (125 mm)
24" (600 mm)	12" (300 mm)	6" (150 mm)
30" (750 mm)	18" (450 mm)	7" (175 mm)
36" (900 mm)	18" (450 mm)	9" (225 mm)
42" (1050 mm)	18" (450 mm)	9" (225 mm)
48" (1200 mm)	18" (450 mm)	10" (250 mm)
57" (1425 mm)	18" (450 mm)	10" (250 mm)
60" (1500 mm)	21" (525 mm)	11" (275 mm)
66" (1650 mm)	21" (525 mm)	11" (275 mm)
72" (1800 mm)	24" (600 mm)	12" (300 mm)

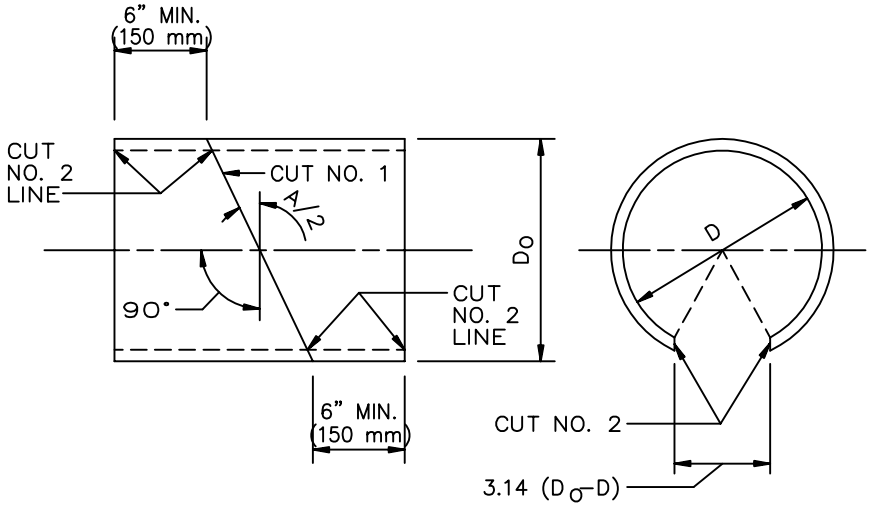

DETAIL "A" (SEE NOTE 10)

SONO-TUBE, OR EQUAL, INTERIOR FORM

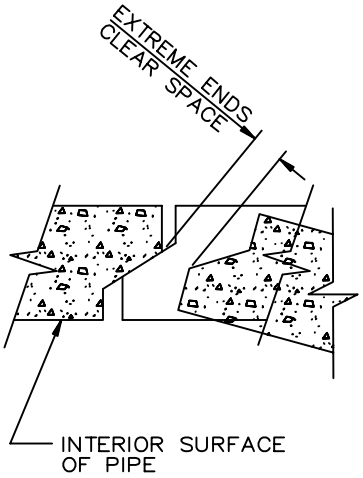

DETAIL "B"

TYPICAL JOINT FOR

REINFORCED CONCRETE PIPE

CUT NO. 1: SAW THE TUBE AT AN ANGLE OF A/2 WITH THE TRANSVERSE PLANE. REVERSE ONE SECTION AND TAPE BOTH SECTIONS TOGETHER FORMING THE DEFLECTION ANGLE A.

CUT NO. 2: SAW THE TUBE LONGITUDINALLY REMOVING A STRIP 3.14 (D_O-D) WIDE ON THE SIDE OPPOSITE THE OPEN JOINT. BEND THE ENDS OF THE CUT TOGETHER AND INSERT THE TUBE IN THE PIPE.

STANDARD PLANS FOR PUBLIC WORKS CONSTRUCTION

PROMULGATED BY THE PUBLIC WORKS STANDARDS INC. GREENBOOK COMMITTEE 1992 REV. 1996, 1997, 1999, 2009

CONCRETE COLLAR FOR RCP 12" (300 mm) THROUGH 72" (1800 mm)

USE WITH STANDARD SPECIFICATIONS FOR PUBLIC WORKS CONSTRUCTION

STANDARD PLAN

380-4

SHEET 1 OF 2

NOTES

1. A CONCRETE COLLAR IS REQUIRED WHERE THE CHANGE IN GRADE EXCEEDS 10%.

2. FOR CURVE JOINTS (SEE DETAIL B, SHEET 1)

   IF THE EXTREME ENDS OF THE PIPE LEAVE A CLEAR SPACE THAT IS GREATER THAN 1" (25 mm), BUT IS LESS THAN 3" (75 mm) A CONCRETE COVER IS REQUIRED IN ACCORDANCE WITH SSPWC 306-1.2.4.

   IF THE EXTREME ENDS OF THE PIPE LEAVE A CLEAR SPACE THAT IS EQUAL TO OR GREATER THAN 3" (75 mm), BUT LESS THAN 6" (150 mm), A CONCRETE COLLAR IS REQUIRED. IF THE CLEAR SPACE IS 6" (150 mm) OR GREATER, A TRANSITION STRUCTURE IS REQUIRED.

3. CONCRETE COLLAR SHALL NOT BE USED FOR A SIZE CHANGE ON THE MAIN LINE.

4. CONNECTOR PIPES

   A. WHERE PIPES OF DIFFERENT DIAMETERS ARE JOINED WITH A CONCRETE COLLAR, L AND T SHALL BE THOSE OF THE LARGER PIPE. $D=D_1$ OR D_2, WHICHEVER IS GREATER.
   B. WHEN D_1 IS EQUAL TO OR LESS THAN D_2, JOIN INVERTS AND WHEN D_1 IS GREATER THAN D_2, JOIN SOFFITS.

5. FOR PIPE LARGER THAN 72" (1800 mm) SPECIAL COLLAR DETAILS ARE REQUIRED.

6. FOR PIPE SIZE NOT LISTED USE NEXT SIZE LARGER.

7. REINFORCEMENT SHALL CONFORM TO ASTM A 615 (A 615 M) GRADE 40 (300).

8. WHERE REINFORCING IS REQUIRED THE DIAMETER OF THE CIRCULAR TIES SHALL BE D+(2X WALL THICKNESS) + T.

9. REINFORCING SHALL BE USED WHERE THE PIPE DIAMETER IS GREATER THAN 21" (525 mm) AND ON ALL PIPES WHERE THE SPACES BETWEEN THE EXTREME OUTER ENDS IS 3" (75 mm) OR LARGER.

   CIRCULAR TIES:

PIPE DIAMETER	NO. OF CIRCULAR TIES
21" (525 mm) OR LESS	3
24" (600 mm) TO 30" (750 mm)	3
33" (825 mm) TO 57" (1425 mm)	4
60" (1500 mm) TO 72" (1800 mm)	5

   WHERE THE SPACE BETWEEN PIPE ENDS EXCEEDS 3" (75 mm), THE NUMBER OF CIRCULAR TIES SHALL BE INCREASED TO MAINTAIN AN APPROXIMATE SPACING OF 6" (150 mm) O.C.

10. WHERE THE PIPE IS 21" (525 mm) OR LESS IN DIAMETER AN INTERIOR FORM OF UNSEALED SONO-TUBE OR EQUAL SHALL BE USED TO PROVIDE A SMOOTH INTERIOR JOINT. THE PAPER FORM MAY BE LEFT IN PLACE (SEE DETAIL A). WHEN THE PIPE IS 24" (600 mm) OR LARGER A REMOVABLE INTERIOR FORM SHALL BE USED OR THE INTERIOR JOINT SHALL BE COMPLETELY FILLED WITH MORTAR AND NEATLY POINTED.

APPENDIX V

CONSTRUCTION & DEMOLITION WASTE MANAGEMENT PLAN (WMP)

Building Permit Number: _____

CITY OF TORRANCE

Construction & Demolition Waste Management Plan (WMP)

THE REQUIREMENT IS TO REUSE OR RECYCLE AT LEAST 50% OF PROJECT WASTE AND 100% OF EXCAVATED SOIL AND LAND-CLEARING DEBRIS

1) As part of your application, you must complete the front and back of this page and the "estimate" or left side of the table on the backside of this page to the best of your ability, indicating that you will recycle at least 50% of the waste from the project and 100% of excavated soil and land-clearing debris.

2) As your project proceeds, collect and keep receipts of all waste disposed, recycled, reused or donated. Receipts must show material type, weight of material, how the material was treated and the facility used.

3) To final your project, you must then fill out the "actual" or right side of the table on the backside of this sheet, and submit it again with all the receipts to verify that at least 50% of the project's waste and 100% of excavated soil and land-clearing debris was diverted from the landfills.

Please note, if you are contracting with a different company to haul your waste or using a roll off box from another company, that company must have a business license to operate in the City of Torrance.

A COPY OF THIS WMP AND RECEIPTS (SHOWING MATERIAL TYPE, WEIGHT, TREATMENT AND FACILITY USED) FOR ALL RECYCLING AND DISPOSAL SHALL BE SUBMITTED BEFORE THE PROJECT WILL RECEIVE FINAL BUILDING APPROVAL. (FOR DEMO PERMITS, THE RECEIPTS FOR THE DEMOLITION WASTE SHOULD BE PROVIDED BEFORE THE FIRST FOOTING INSPECTION AFTER THE BUILDING PERMIT HAS BEEN ISSUED.)

Project Name: _____

Location: _____

Requesting Infeasibility Exemption: ☐ **Yes** ☐ **No**

Contractor Name: _____ **Contact Name**: _____

Address: _____ **Contact Phone**: _____

Recycler: _____ **Recycler Contact**: _____

Recycler Address: _____ **Recycler Contact Phone**: _____

CITY USE ONLY

	Application (Date)	Final (Date)
Approved		
Further explanation needed (see attached)		
Denied		
Infeasibility Exemption Approved		
Reviewed By		

Submit this form and the attached Waste Management Plan Table to: **WMP Compliance Official**
Alison Sherman, Public Works
asherman@TorranceCA.Gov
Fax: 310-781-6902

For questions or for in-person visit (by appointment only), please call 310-781-6900

CITY OF TORRANCE

Construction & Demolition Waste Management Plan Table

Project Name: _____

Total Estimated Waste Generated by Project: _____ (in tons).
(Ask your hauler, recycler or site cleanup vendor to assist you. Use receipts from your previous jobs for estimates)

Complete and return with Building Permit Application			**Complete and return with receipts prior to final building approval**		
Material Type	Estimated Reused/ Recycled	Estimated Disposed/ Landfilled	Actual Reused/ Recycled	Actual Disposed/ Landfilled	Vendor or Facility Used (Destination)
	(In Tons)	(In Tons)	(In Tons)	(In Tons)	
Asphalt & Concrete					
Bricks/Masonry/Tiles					
Building Materials (doors, windows, fixtures, etc.)					
Cardboard					
Excavated dirt and land-clearing debris					
Dirt					
Landscape Debris (Plant & Tree Trimmings)					
Scrap Metal					
Unpainted Wood & Pallets					
Other (painted wood & drywall, roofing, etc.)					
Mixed C&D*					
Trash/Garbage					
TOTAL					

If you are requesting an infeasibility exemption and the estimated amount reused/recycled is less than 50%, please explain why (attach additional sheets if necessary):

_____

_____

_____

Prepared by (print): _____ Date: _____

Signature: _____ Phone Number:_____

Must be signed by Contractor or Owner. Signatory accepts financial responsibility for penalties for non-compliance.

_____

* *Mixed C&D* is defined as a mixture of three or more materials (e.g. wood, drywall, roofing, etc.) from construction or demolition sites that will be taken to a facility capable of recycling those commingled materials.

Conversion Rates

The following conversion rates are estimates to help complete the Waste Management Plan by converting materials into tonnage format. The ranges vary widely, depending on how the materials are handled (compacted, loose, chipped, etc.). Use the conversion factors and receipts from any previous projects to help you estimate the potential amount of materials and diversion. Take into consideration the type and load of vehicles that will be used to haul the materials. Ask your hauler or recycler to assist you in estimating these numbers.

Material	**Lbs/cy**	**Tons/cy**
Asphalt	1,400 lbs/cy	0.7 tons/cy
Brick	2,430 lbs/cy	1.21 tons/cy
Cardboard	100 lbs/cy	0.05 tons/cy
Concrete	2,600 lbs/cy (Sources range from 1,000 to 4,000)	1.3 tons/cy
Dirt/Soils	2,660 lbs/cy	1.33 tons/cy
Drywall	700 lbs/cy	0.35 tons/cy
Wood (chipped)	300 - 650 lbs/cy	0.15 – 0.3 tons/cy
Mixed C&D Debris	900 lbs/cy	0.45 tons/cy
Mixed Waste/Trash	100 - 350 lbs/cy	0.05 - 0.175 tons/cy

APPENDIX VI

CALTRANS STANDARD PLANS AND ENCROACHMENT PERMIT

STATE OF CALIFORNIA • DEPARTMENT OF TRANSPORTATION

STANDARD ENCROACHMENT PERMIT APPLICATION

TR-0100 (REV. 07/2007)

FOR CALTRANS USE
PERMIT NO.
DIST/CO/RTE/PM
SIMPLEX STAMP
DATE OF SIMPLEX STAMP

Permission is requested to encroach on the State Highway right-of-way as follows:
(Complete all BOXES [write N/A if not applicable] Please print single sided)
This application is not complete until all requirements have been approved.

1. COUNTY	2. ROUTE	3. POSTMILE
Los Angeles	405	16

4. ADDRESS OR STREET NAME	5. CITY
Yukon Avenue	Torrance

6. CROSS STREET *(Distance and direction from site)*	7. PORTION OF RIGHT-OF-WAY
500 feet north of 182nd Street	Below grade

8. WORK TO BE PERFORMED BY	9. EST. START DATE	10. EST. COMPLETION DATE
☐ OWN FORCES ☑ CONTRACTOR	June 2015	September 2015

11. EXCAVATION	MAX. DEPTH	AVG. DEPTH	AVG. WIDTH	LENGTH	SURFACE TYPE
	10 feet	3.5 feet	36 inches	180 feet	Concrete Pavement

12. EST. COST IN STATE HIGHWAY RIGHT-OF-WAY	FUNDING SOURCE(S)
$205,000	☐ FEDERAL ☐ STATE ☑ LOCAL ☐ PRIVATE

13. PIPES	PRODUCT TYPE	DIAMETER	VOLTAGE / PSIG	14. CALTRANS' PROJECT CODE
	Stormwater	30 inches	N/A	N/A

15. ☑ **Double Permit** **Parent Permit Number** _____

Applicant's Reference Number / Utility Work Order Number _____

16. Have your plans been reviewed by another Caltrans branch? ☑ **NO** ☐ **YES** (If "YES") **Who?**_____

17. Completely describe work to be done within STATE highway right-of-way :

Attach 6 complete sets of plans (folded to 8.5" x 11"), and any applicable specifications, calculations, maps, etc.
All dimensions shall be in U.S. Customary (English) Units.

The proposed work includes jack and bore operations to place a 30" HDPE storm drain, with a 48" casing, below the freeway right-of-way and installation of an 18" HDPE water main within Yukon Avenue. An existing 4'x2' RCB and a 24" RCP currently outlet into180th Place. The outlet structure associated with the 4'x2' RCB will be modified to discharge directly into a proposed catch basin and the flows from the 24" RCP will also be collected in the proposed catch basin (located on the edge of Caltrans right-of-way). The 18" HDPE water main will be installed using the standard cut and cover method. The existing PCC pavement along the water line alignment will be saw cut, removed, and replaced with PCC pavement.

18. Is a city, county, or other agency involved in the approval of this project?

☑ YES ***(If "YES", check type of project and attach environmental documentation and conditions of approval.)***

☐ COMMERCIAL DEVELOPMENT ☐ BUILDING ☐ GRADING ☑ OTHER Utility and storm drain installation

☐ CATEGORICALLY EXEMPT ☐ NEGATIVE DECLARATION ☐ ENVIRONMENTAL IMPACT REPORT ☐ OTHER_____

☐ NO ***(If "NO", please check the category below which best describes the project, and complete page 4 of this application.)***

☐ DRIVEWAY OR ROAD APPROACH, RECONSTRUCTION, MAINTENANCE, OR RESURFACING
☐ PUBLIC UTILITY MODIFICATIONS, EXTENSIONS, HOOKUPS
☐ FLAGS, SIGNS, BANNERS, DECORATIONS, PARADES AND CELEBRATIONS
☐ OTHER_____
☐ FENCE
☐ MAILBOX
☐ EROSION CONTROL
☐ LANDSCAPING

19. Will this project cause a substantial change in the significance of a historical resource (45 years or older), or cultural resource? ☐ YES ☑ NO
(If "YES", provide a description)

20. Is this project on an existing highway or street where the activity involves removal of a scenic resource including a significant tree or stand of trees, a rock outcropping or a historic building? ☐ YES ☑ NO (If "YES", provide a description)

21. Is work being done on applicant's property? ☑ YES ☐ NO (If "YES", attach site and grading plans.)

ADA NOTICE: For individuals with sensory disabilities, this document is available in alternate formats. For information, call (916) 654–6410, TTY 711, or write to Records and Forms Management, 1120 N Street, MS–89, Sacramento, CA 95814.

STANDARD ENCROACHMENT PERMIT APPLICATION

TR-0100 (REV. 07/2007)

PERMIT NO.

22. Will this proposed project require the disturbance of soil? ☑ YES ☐ NO

If "YES", estimate the area within State Highway right-of-way in square feet AND acres: 1,405 (ft^2) AND 0.032 (acres)

estimate the area outside of State Highway right-of-way in square feet AND acres: 8,880 (ft^2) AND 0.2 (acres)

23. Will this proposed project require dewatering? ☐ YES ☑ NO

If "YES", estimate total gallons AND gallons/month._____(gallons) AND _____(gallons/month)

SOURCE*: ☐ STORM WATER ☐ NON-STORM WATER

(*See Caltrans SWMP for definitions of non-storm water discharge: http://www.dot.ca.gov/hq/env/stormwater/index.htm)

24. How will any storm water or ground water be disposed of from within or near the limits of this proposed project?

☑ Storm Drain System ☐ Combined Sewer / Storm System ☐ Storm Water Retention Basin

☐ Other (explain): _____

PLEASE READ THE FOLLOWING CLAUSES PRIOR TO SIGNING THIS ENCROACHMENT PERMIT APPLICATION.

The applicant, understands and herein agrees that an encroachment permit can be denied, and/or a bond required for non-payment of prior or present encroachment permit fees. Encroachment Permit fees may still be due when an application is withdrawn or denied, and that a denial may be appealed, in accordance with the California Streets and Highways Code, Section 671.5. All work shall be done in accordance with Caltrans rules and regulations subject to inspection and approval.

The applicant, understands and herein agrees to the general provisions, special provisions and conditions of the encroachment permit, and to indemnify and hold harmless the State, its officers, directors, agents, employees and each of them (Indemnitees) from and against any and all claims, demands, causes of action, damages, costs, expenses, actual attorneys' fees, judgments, losses and liabilities of every kind and nature whatsoever (Claims) arising out of or in connection with the issuance and/or use of this encroachment permit and the placement and subsequent operation and maintenance of said encroachment for: 1) bodily injury and/or death to persons including but not limited to the Applicant, the State and its officers, directors, agents and employees, the Indemnities, and the public; and 2) damage to property of anyone. Except as provided by law, the indemnification provisions stated above shall apply regardless of the existence or degree of fault of Indemnities. The Applicant, however, shall not be obligated to indemnify Indemnities for Claims arising from the sole negligence and willful misconduct of State, its officers, directors, agents or employees.

An encroachment permit is not a property right and does not transfer with the property to a new owner

DISCHARGES OF STORM WATER AND NON-STORM WATER: Work within State Highway right-of-way shall be conducted in compliance with all applicable requirements of the National Pollutant Discharge Elimination System (NPDES) permit issued to the Department of Transportation (Department), to govern the discharge of storm water and non-storm water from its properties. Work shall also be in compliance with all other applicable Federal, State and Local laws and regulations, and with the Department's Encroachment Permits Manual and encroachment permit. Compliance with the Departments NPDES permit requires amongst other things, the preparation and submission of a Storm Water Pollution Protection Plan (SWPPP), or a Water Pollution Control Program (WPCP), and the approval of same by the appropriate reviewing authority prior to the start of any work. Information on the requirements may also be reviewed on the Department's Construction Website at:

http://www.dot.ca.gov/hq/construc/stormwater

25. NAME of APPLICANT or ORGANIZATION *(Print or Type)* City of Torrance	E-MAIL ADDRESS EMartin@TorranceCA.gov
ADDRESS of APPLICANT or ORGANIZATION WHERE PERMIT IS TO BE MAILED *(Include City and Zip Code)* 20500 Madrona Avenue, Torrance, CA 90503	
PHONE NUMBER (310) 618-3059	FAX NUMBER N/A
26. NAME of AUTHORIZED AGENT / ENGINEER *(Print or Type)* William Young	**IS LETTER OF AUTHORIZATION ATTACHED?** ☑ **YES** ☐ **NO** E-MAIL ADDRESS WYoung@cwecorp.com
ADDRESS of AUTHORIZED AGENT / ENGINEER *(Include City and Zip Code)* 1561 E. Orangethorpe Avenue, Suite 240, Fullerton, California 92831	
PHONE NUMBER (714) 526-7500 ext. 103	FAX NUMBER (714) 526-7004

27. SIGNATURE of APPLICANT or AUTHORIZED AGENT	**28. PRINT OR TYPE NAME**	**29. TITLE**	**30. DATE**
	William Young	Director of Engineering	09/16/2014

PERMIT NO.
WORK ORDER/REFERENCE NUMBER

FEE CALCULATION -- FOR CALTRANS USE

☐ CASH ☐ CREDIT CARD NAME ON CARD _____ PHONE NUMBER _____

☐ CHECK NUMBER _____ NAME ON CHECK _____ PHONE NUMBER _____

☐ EXEMPT ☐ PROJECT CODE __ __ __ __ __ __ ☐ DEFERRED BILLING (Utility)

CALCULATED BY	(1)		(2)		
REVIEW 1. _____ HOURS @ $_____ * 2. _____ HOURS @ $_____ *	1. FEE / DEPOSIT $_____	DATE	2. FEE / DEPOSIT $_____	DATE	TOTAL FEE / DEPOSIT $_____ $_____
INSPECTION 1. _____ HOURS @ $_____ * 2. _____ HOURS @ $_____ *	1. FEE / DEPOSIT $_____	DATE	2. FEE / DEPOSIT $_____	DATE	TOTAL FEE / DEPOSIT $_____ $_____
FIELD WORK _____ HOURS @ $_____ *	$_____		$_____		$_____
EQUIPMENT & MATERIALS	DEPOSIT $_____	DATE	DEPOSIT $_____	DATE	DEPOSIT $_____
CASH DEPOSIT IN LIEU OF BOND	$_____		$_____		$_____
TOTAL COLLECTED	$_____		$_____		
CASHIER'S INITIALS	_____		_____		$_____

** The Standard Hourly Rate is set annually by HQ Encroachment Permits. District Office staff do not have authority to modify this rate.*

PERFORMANCE BOND	☐	DATE	AMOUNT $
PAYMENT BOND	☐	DATE	AMOUNT $
LIABILITY INSURANCE REQUIRED?		☐ YES ☐ NO	AMOUNT $

PERMIT NO.

INSTRUCTIONS
for completing page 4

This page needs to be completed when the proposed project DOES NOT involve a City, County or other public agency.

Your answers to these questions will assist departmental staff in identifying any physical, biological, social or economic resources that may be affected by your proposed project within the State highway right-of-way and to determine which type of environmental studies may be required to approve your application for an encroachment permit.

It is the applicant's responsibility for the production of all required environmental documentation and supporting studies and in some cases this may be costly and time-consuming. If possible, attach photographs of the location of the proposed project.

Please answer these questions to the best of your ability. Provide a description of any "YES" answers (type, name, number, etc.)

1. **Will any existing vegetation and/or landscaping within the highway right-of-way be disturbed?**
2. **Are there waterways (e.g. river, creek, pond, natural pool or dry streambed) adjacent to or within the limits of the project or highway right-of-way?**
3. **Is the proposed project located within five miles of the coast line?**
4. **Will the proposed project generate construction noise levels greater than 86 dBA (e.g. jack-hammering, pile driving)?**
5. **Will the proposed project incorporate land from a public park, recreation area or wildlife refuge open to the public?**
6. **Are there any recreational trails or paths within the limits of the proposed project or highway right-of-way?**
7. **Will the proposed project impact any structures, buildings, rail lines, or bridges within highway right-of-way?**
8. **Will the proposed project impact access to any businesses or residences?**
9. **Will the proposed project impact any existing public utilities or public services?**
10. **Will the proposed project impact existing pedestrian facilities, such as sidewalks, crosswalks, or overcrossings?**
11. **Will new lighting be constructed within or adjacent to highway right-of-way?**

APPENDIX VII

LOS ANGELES COUNTY DEPARTMENT OF PUBLIC WORKS STANDARD PLANS AND ENCROACHMENT PERMIT

NOTE:

The Contractor shall provide liability insurance naming the City of Torrance, County of Los Angeles, and the Los Angeles Flood Control District as co-insured; submit BMP Acknowledgement Form; and pay all charges, fees ($2,000) and bonds for this permit.

The application shall be made to the:

Los Angeles County Department of Public Works,
Permits and Subdivisions Section
8th Floor, 900 South Fremont Avenue,
Alhambra, CA 91803-1331

Point of contact: Hassan Houmsi
(626) 458-4992

Reference Permit Number: PCFL 201404106

LOS ANGELES COUNTY DEPARTMENT OF PUBLIC WORKS
FOR LOS ANGELES COUNTY FLOOD CONTROL DISTRICT

900 S. FREMONT AVE.
ALHAMBRA, CALIFORNIA 91803-1331

TRACKING NO. _____

FLOOD PERMIT APPLICATION

DATE RECEIVED: _____

OWNER/ APPLICANT: City of Torrance TELEPHONE: (310) 618-3059

ADDRESS: 20500 Madrona Avenue, Torrance, CA 90503
Street City Zip Code

AGENT/ CONTACT: William Young TELEPHONE: (714) 526-7500 ext. 103

ADDRESS: 1561 E. Orangethorpe Avenue, Suite 240 Fullerton CA 92831
Street City Zip Code

E-MAIL WYoung@cwecorp.com

SITE ADDRESS: Yukon Avenue Torrance CA 90503
Street City Zip Code

NEAREST INTERSECTION: 182th Street and Yukon Avenue THOMAS GUIDE: _____

SCOPE OF WORK: The proposed work will include connection to the upstream MH of Lateral 'D' on Line "A" of the North Torrance Relief Drain, Unit 3 (Project 645 - D5). Stormwater conveyed by this connection will be from surface flows that currently outlet into 180th Place from the Caltrans R/W. A new catch basin will be constructed at the east end of 180th Place to collect these surface flows. The proposed 30" RCP that continues north through Caltrans R/W will be used for a water reservoir emergency overflow. Facilities upstream of the connection MH are City maintained.

PERSON/AGENCY RESPONSIBLE FOR THE MAINTENANCE OF THE PROPOSED FACILITY: City of Torrance, John Dettle PHONE: (310) 618-3059

The undersigned certifies that the applicant for this permit is familiar with the requirements of the County Lobbyist Ordinance (Los Angeles County Code Chapter 2.160), and that all persons acting on behalf of the applicant have complied with and will continue to comply with this ordinance throughout the application process. **It is further agreed that the Owner/Applicant is the financially responsible party for all fees, deposits, charges, collections and refunds, regardless if payment is made by others**

William F. Young	William F. Young	October 29, 2014
Print Name of Owner/Applicant	**Signature of Owner/Applicant**	**Date**

Submittal Requirements:

1. Four sets of final construction plans (seven if the Corps is involved) with structural details and profiles of the existing and proposed facilities.
2. Two sets of letter size structural and/or hydraulic and hydrology calculations. The plans and calculations must be stamped and signed by a registered civil/structural engineer licensed to practice in the State of California.
3. Four copies of the As-Built drawings of the District's facility impacted by the proposed work and two of the right-of-way map.
4. Letter from Owner/Applicant authorizing Agent/Contact to request a permit on their behalf.
5. For storm drain connections, complete EXHIBIT "A" when applicable, and submit SUSMP.
6. Fees will be charged according to the current ordinance established by the Board of Supervisors
7. Certificate of Liability Insurance ($1 Million minimum coverage) and additional insured endorsement naming the County of Los Angeles, the Los Angeles County Flood Control District, and, when applicable, the U.S. Army Corps of Engineers as co-insured.
8. Complete and sign acknowledgement that Applicant has read, understands, and agrees to fully comply with the Best Management Practices (BMP) Attachment to this permit per Los Angeles County Code Chapter 12.80 Stormwater and Runoff Pollution Control.

The applicant must show that the proposed work will not adversely affect the District's interests; i.e., (1) Hydraulic and Hydrologic Design; (2) Structural integrity; (3) Maintenance standards; (4) District's property rights, etc.

FOR DISTRICT USE ONLY

RECEIVED BY: _____ *ASSIGNED TO:* _____

PAYMENT

Issuance Fee: $_____ Project No. _____
Plan Check: $_____ (Fee or AC) Project No. _____
Inspection: $_____ (Fee or AC) Project No. _____
Other: $_____ (Fee or AC) Project No. _____
Total: $_____

Suggested Routing:

FMD	DES-H	DES-S
WMD	WRD	MPM
ACE	PDD	EPD
AED	GMED	T&L
RMD	Road Unit	
Other _____		

TYPE

Storm Drain Connection	Landscaping	Overbuild	Access
Catch Basin Relocation	Major Modifications	Bridge	LNO
Catch Basin Modification	Minor Modifications	Utility Crossing	Other _____

INFO

Stream/Project _____ File Code _____ P.O. # _____

PD/MTD (To be Transferred) _____ Tract/P.M. No. _____

FOR DISTRICT USE ONLY

(Preliminary Check)

General

- ❑ Incomplete packages are NOT accepted
- ❑ Plan Check and Inspection fees included
- ❑ Vicinity Map
- ❑ Affected facility (i.e. MTD, RDD, & etc.) has been transferred to the District for maintenance

General Engineering Requirements

- ❑ Two sets of calculations and/or reports stamped and signed by a Civil/Structural/Geotechnical Engineer
- ❑ Four sets of plans (seven for Army Corp facilities) signed and stamped by a Civil/Structural/Geotechnical Engineer
- ❑ Four copies of District's facility "As-Built" drawings that are affected by the proposed work
- ❑ Name of affected District facility shown on the plans for the proposed work
- ❑ Plan, Profiles, Elevations, Sections, and Details for the proposed work

Storm Drain Connections

- ❑ Existing hydraulic and hydrology data of the District's facility impacted by the proposed connection
- ❑ Obtain the "Allowable Q" from Design Division
- ❑ Revised Hydraulic calculations taking into account the proposed connection
- ❑ Water quality agreement signed and notarized (Not always required)
- ❑ Stationing along LACFCD's storm drain centerline where the proposed connection is located
- ❑ SUSMP

Catch basin relocation

- ❑ Existing catch basin hydrology and design data included.
- ❑ Revised catch basin hydrology and design data included.
- ❑ Connector pipe hydraulics.
- ❑ Street capacity calculations

Crossings over channels

- ❑ Water surface and pier loss calculations
- ❑ Structural calculations for the bridge/ utility crossing including surcharges on the District facility
- ❑ Plan and profile plans

Overbuilds

- ❑ Right-of-way letter of approval from the underlying fee owner
- ❑ Two copies of the structural calculations for added surcharges on the District facility
- ❑ Two copies of the right-of-way map
- ❑ Two copies of the easement documents (if LACFCD is not the underlying fee owner)

Utility Crossings

Under-crossing

- ❑ Plan and profile of proposed utility showing the District storm drain
- ❑ Method of support and structural calculations
- ❑ Two copies of right-of-way map and four copies of the "as built"

Over-crossing

- ❑ Plan and profile of proposed utility showing the District storm drain
- ❑ Two copies of right-of-way map and four copies of the "as built"
- ❑ Structural calculations for added surcharges on the District facility

Temporary Use

Short Term Use (less than a year)

- ❑ Liability Insurance ($1,000,000 minimum coverage) including LACFCD/LACDPW as additionally insured
- ❑ Plot plan with north arrow and limits of affected areas

Long Term Use (more than a year)

- ❑ Copy of Use Agreement, Recreation Agreement
- ❑ SDF Plot plan with north arrow and limits of affected areas

ACORD™ CERTIFICATE OF LIABILITY INSURANCE

DATE (MM/DD/YYYY)

PRODUCER

INSURANCE BROKER OR COMPANY NAME AND CONTACT INFORMATION, INCLUDING EMAIL ADDRESS

THIS CERTIFICATE IS ISSUED AS A MATTER OF INFORMATION ONLY AND CONFERS NO RIGHTS UPON THE CERTIFICATE HOLDER. THIS CERTIFICATE DOES NOT AMEND, EXTEND OR ALTER THE COVERAGE AFFORDED BY THE POLICIES BELOW.

INSURERS AFFORDING COVERAGE	NAIC #
INSURER A:	
INSURER B:	
INSURER C:	
INSURER D:	
INSURER E:	

INSURED

COMPANY NAME AND CONTACT INFORMATION, INCLUDING *A VALID* EMAIL ADDRESS

COVERAGES

THE POLICIES OF INSURANCE LISTED BELOW HAVE BEEN ISSUED TO THE INSURED NAMED ABOVE FOR THE POLICY PERIOD INDICATED. NOTWITHSTANDING ANY REQUIREMENT, TERM OR CONDITION OF ANY CONTRACT OR OTHER DOCUMENT WITH RESPECT TO WHICH THIS CERTIFICATE MAY BE ISSUED OR MAY PERTAIN, THE INSURANCE AFFORDED BY THE POLICIES DESCRIBED HEREIN IS SUBJECT TO ALL THE TERMS, EXCLUSIONS AND CONDITIONS OF SUCH POLICIES. AGGREGATE LIMITS SHOWN MAY HAVE BEEN REDUCED BY PAID CLAIMS.

INSR LTR	ADD'L INSRD	TYPE OF INSURANCE	POLICY NUMBER	POLICY EFFECTIVE DATE (MM/DD/YY)	POLICY EXPIRATION DATE (MM/DD/YY)	LIMITS	
		GENERAL LIABILITY				EACH OCCURRENCE	$
		COMMERCIAL GENERAL LIABILITY				DAMAGE TO RENTED PREMISES (Ea occurence)	$
		CLAIMS MADE / OCCUR				MED EXP (Any one person)	$
						PERSONAL & ADV INJURY	$
						GENERAL AGGREGATE	$
		GEN'L AGGREGATE LIMIT APPLIES PER: POLICY / PRO-JECT / LOC				PRODUCTS - COMP/OP AGG	$
		AUTOMOBILE LIABILITY				COMBINED SINGLE LIMIT (Ea accident)	$
		ANY AUTO					
		ALL OWNED AUTOS				BODILY INJURY (Per person)	$
		SCHEDULED AUTOS					
		HIRED AUTOS				BODILY INJURY (Per accident)	$
		NON-OWNED AUTOS					
						PROPERTY DAMAGE (Per accident)	$
		GARAGE LIABILITY				AUTO ONLY - EA ACCIDENT	$
		ANY AUTO				OTHER THAN AUTO ONLY: EA ACC	$
						AGG	$
		EXCESS/UMBRELLA LIABILITY				EACH OCCURRENCE	$
		OCCUR / CLAIMS MADE				AGGREGATE	$
							$
		DEDUCTIBLE					$
		RETENTION $					$
		WORKERS COMPENSATION AND EMPLOYERS' LIABILITY				WC STATUTORY LIMITS / OTHER	
		ANY PROPRIETOR/PARTNER/EXECUTIVE OFFICER/MEMBER EXCLUDED?				E.L. EACH ACCIDENT	$
		If yes, describe under SPECIAL PROVISIONS below				E.L. DISEASE - EA EMPLOYEE	$
						E.L. DISEASE - POLICY LIMIT	$
		OTHER					

Sample

Sample

DESCRIPTION OF OPERATIONS / LOCATIONS / VEHICLES / EXCLUSIONS ADDED BY ENDORSEMENT / SPECIAL PROVISIONS

Please provide specific details such as project location, type of work, application tracking number, permit number, etc...

CERTIFICATE HOLDER

COUNTY OF LOS ANGELES
DEPARTMENT OF PUBLIC WORKS
LAND DEVELOPMENT DIVISION
P. O. BOX 1460
ALHAMBRA, CA 91802-1460
ATTENTION: _____

CANCELLATION

SHOULD ANY OF THE ABOVE DESCRIBED POLICIES BE CANCELLED BEFORE THE EXPIRATION DATE THEREOF, THE ISSUING INSURER SHALL MAIL 30 DAYS WRITTEN NOTICE TO THE CERTIFICATE HOLDER.

AUTHORIZED REPRESENTATIVE

© ACORD CORPORATION 1988

POLICY NUMBER:

COMMERCIAL GENERAL LIABILITY
CG 20 12 05 09

THIS ENDORSEMENT CHANGES THE POLICY. PLEASE READ IT CAREFULLY.

ADDITIONAL INSURED – STATE OR GOVERNMENTAL AGENCY OR SUBDIVISION OR POLITICAL SUBDIVISION – PERMITS OR AUTHORIZATIONS

This endorsement modifies insurance provided under the following:

COMMERCIAL GENERAL LIABILITY COVERAGE PART

SCHEDULE

State Or Governmental Agency Or Subdivision Or Political Subdivision:
The County of Los Angeles and public entity or Special District for which the Los Angeles County Board of Supervisors is the Governing Body, and their Agents, Officers and Employees, shall be Additional insured(s) while acting within the scope of their duties against all claims arising out of or in connection with the work to be performed.
Information required to complete this Schedule, if not shown above, will be shown in the Declarations.

SAMPLE

Section II – Who Is An Insured is amended to include as an insured any state or governmental agency or subdivision or political subdivision shown in the Schedule, subject to the following provisions:

1. This insurance applies only with respect to operations performed by you or on your behalf for which the state or governmental agency or subdivision or political subdivision has issued a permit or authorization.
2. This insurance does not apply to:
   a. "Bodily injury", "property damage" or "personal and advertising injury" arising out of operations performed for the federal government, state or municipality; or
   b. "Bodily injury" or "property damage" included within the "products-completed operations hazard".

016581

© Insurance Services Office, Inc., 2008

LOS ANGELES COUNTY DEPARTMENT OF PUBLIC WORKS

Acknowledgement Best Management Practices (BMP) Attachment

DATE: _____ PERMIT NO. _____

OWNER/APPLICANT: _____ PHONE: ( ) _____
PRINT NAME **WET SIGNATURE (REQUIRED)**

ADDRESS: _____
STREET CITY ZIP CODE

FAX: ( ) _____ CELL: ( ) _____ EMAIL ADDRESS: _____

AGENT/CONTACT: _____ PHONE: ( ) _____
PRINT NAME **WET SIGNATURE (REQUIRED)**

ADDRESS: _____
STREET CITY ZIP CODE

FAX: ( ) _____ CELL: ( ) _____ EMAIL ADDRESS: _____

hereby acknowledges reading, understanding, and agreeing to comply with the Best Management Practices (BMP) Attachment in accordance with Los Angeles County Code Chapter 12.80 Stormwater and Runoff Pollution Control.

SITE ADDRESS: _____
Street City Zip Code

NEAREST INTERSECTION: _____ THOMAS GUIDE: _____

PLEASE SUBMIT THIS DOCUMENT WITH THE APPLICATION

Best Management Practices (BMPs)
Attachment

The Los Angeles County Department of Public Works (LACDPW) requires Permittees and their contractors to implement a program to effectively control water pollution during all Permit construction projects. This project shall conform with the requirements of the following County Code and Permits:

- Los Angeles, California County Code Chapter 12.80 Stormwater and Runoff Pollution Control
- Waste Discharge Requirements for Municipal Storm Water and Urban Runoff Discharges within the County of Los Angeles, and the Incorporated Cities Therein, Except the City of Long Beach (Order No. 01-182, National Pollutant Discharge Elimination System [NPDES] No. CAS004001),
- NPDES General Permit No. CAS000002, as amended, Waste Discharge Requirements for Discharges of Storm Water Runoff Associated with Construction Activities.

The Permittee or Authorized Representative and their contractors shall know and fully comply with the applicable provisions of these permits and Federal, State and local regulations that govern the Permittee or Authorized Representative's operations and the storm water discharges from the project site.

In order to ensure a minimum level of water quality control, the Permittee or Authorized Representative and their contractors shall effectively implement and maintain appropriate Best Management Practices (BMPs) shown in Table 1. In addition, the Permittee or Authorized Representative and their contractors shall comply with the following requirements:

- Sediments shall not be discharged to the storm drain system or receiving waters. Sediments generated on the construction site shall be retained.
- No construction-related materials: waste, spills, or residue shall be discharged from the project site to streets, drainage facilities, receiving waters, or adjacent property by wind or runoff.
- Non-storm water runoff from equipment, vehicle washing, or any other activity shall be contained within the project site using appropriate BMPs.
- Erosion from slopes and channels shall be prevented.
- Minimize grading during the wet season (October 15 through April 15). All erosion susceptible slopes shall be covered, planted, or protected in any way that prevents sediment discharge from the project site.

BMPs shall conform to the requirements in the LACDPW Construction Division's "Construction Site Best Management Practices (BMPs) Manual," and addenda thereto issued up to and including, the date of issuance of the Permit for the project. Copies of the Manual are available for purchase from:

Los Angeles County Department of Public Works
Cashier's Office
900 South Fremont Avenue
Alhambra, CA 91803
Telephone (626) 458-6959

Year-Round Implementation Requirements

The Permittee or Authorized Representative and their contractors shall have an effective program for implementing, inspecting, and maintaining water pollution control practices for wind erosion control, tracking control, non-storm water control, and waste management and materials pollution control.

Soil stabilization and sediment control practices shall be provided throughout the rainy season, defined as between October 15 and April 15, and whenever the National Weather Service predicts rain within 24 hours. The National Weather Service weather forecast shall be monitored and used by the Permittee on a daily basis.

The non-rainy season shall be defined as all days outside the defined rainy season. Disturbed soil areas within the project shall be protected in conformance with the requirements in the Construction Site BMP Manual with sediment controls implemented prior to a predicted rain event.

Maintenance and Inspection

The Permittee or Authorized Representative and their contractors shall be responsible throughout the duration of the project for installing, constructing, inspecting, maintaining, removing and disposing of the BMPs. Unless otherwise directed by LACDPW, the Permittee or Authorized Representative and their contractors are responsible for BMP implementation and maintenance throughout any temporary suspension of work. The Permittee or Authorized Representative shall reimburse LACDPW for the full costs of cleaning or repairing of storm drain, water course, or channel which may be necessary due to ineffective implementation of BMPs.

The project site shall be inspected by the Permittee or Authorized Representative or their contractors a minimum of once every week or at least once for projects that last only one week or less.

Report of Non-Permitted Discharge and Enforcement

If the Permittee or Authorized Representative or their contractors identify any non-permitted discharge into the storm drain system or receiving waters in a manner causing, or potentially causing, a condition of pollution, or if the project receives a written notice or order from any regulatory agency, the Permittee or Authorized Representative or their contractors shall immediately inform LACDPW Construction Division Permits Section by calling the assigned Field Office. The Permittee or Authorized Representative or their contractors shall submit a written report (see attached Notice of Non-Permitted Discharge) to the LACDPW within 5 days of the discharge event, notice or order.

The Permittee or Authorized Representative and their contractors are subject to enforcement action by Chapter 12.80 of the Los Angeles County Code that states, *"Any person, firm, corporation, municipality or district or any officer or agent of any firm, corporation, municipality or district violating any provision of this chapter shall be guilty of a misdemeanor. Such violation shall be punishable by a fine of not more than $1,000 or by imprisonment in the county jail for a period not to exceed six months, or by both fine and imprisonment. Each day during any portion of which such violation is committed, continued or permitted shall constitute a separate offense and shall be punishable as such (Ord. 98-0021§1(part), 1998)."*

In addition, the Permittee or Authorized Representative and their contractors are subject to enforcement action by the State Water Resources Control Board (SWRCB), Environmental Protection Agency, private citizens and citizen groups. The Permittee or Authorized Representative and their contractors shall be responsible for the costs and for liabilities imposed by law as a result of the Permittee or Authorized Representative or their contractor's failure to

comply. Costs and liabilities include, but are not limited to, fines, penalties and damages whether assessed against LACDPW or the Permittee or Authorized Representative or their contractors, including those levied under the Federal Clean Water Act and the State Porter Cologne Water Quality Act.

Table 1 Construction Site BMPs		
ID	**BMP Name**	**Minimum Requirement(1)**
Temporary Soil Stabilization		
SS-1	Scheduling	X(2)
SS-2	Preservation of Existing Vegetation	X(2)
SS-3	Hydraulic Mulch(3)	
SS-4	Hydroseeding(3)	
SS-5	Soil Binders(3)	
SS-6	Straw Mulch(3)	
SS-7	Geotextiles, Plastic Covers, & Erosion Control Blankets/Mats(3)	
SS-8	Wood Mulching	
SS-9	Earth Dikes/Drainage Swales & Ditches	
SS-10	Outlet Protection/Velocity Dissipation Devices	
SS-11	Slope Drains	
SS-12	Streambank Stabilization	
Temporary Sediment Control		
SC-1	Silt Fence(4)	
SC-2	Desilting Basin	
SC-3	Sediment Trap	
SC-4	Check Dam	
SC-5	Fiber Rolls(4)	
SC-6	Gravel Bag Berm(4)	
SC-7	Street Sweeping and Vacuuming	X(2)
SC-8	Sandbag Barrier(4)	
SC-9	Straw Bale Barrier(4)	
SC-10	Storm Drain Protection	X(2)
Wind Erosion Control		
WE-1	Wind Erosion Control	X(2)
Tracking Control		
TC-1	Stabilized Construction Entrance/Exit	
TC-2	Stabilized Construction Roadway	
TC-3	Entrance/Outlet Tire Wash	

Table 1 (continued) Construction Site BMPs		
ID	**BMP Name**	**Minimum Requirement[1]**
Non-Storm Water Management		
NS-1	Water Conservation Practices	
NS-2	Dewatering Operations[5]	
NS-3	Paving and Grinding Operations	
NS-4	Temporary Stream Crossing	
NS-5	Clear Water Diversion	
NS-6	Illicit Connection/Illegal Discharge Detection and Reporting	X[2]
NS-7	Potable Water/Irrigation	
NS-8	Vehicle Equipment Cleaning	X[2]
NS-9	Vehicle Equipment Fueling	X[2]
NS-10	Vehicle Equipment Maintenance	X[2]
NS-11	Pile Driving Operations	
NS-12	Concrete Curing	
NS-13	Material and Equipment Use Over Water	
NS-14	Concrete Finishing	
NS-15	Structure Demolition/Removal Over or Adjacent to Waters	
NS-16	Temporary Batch Plant	
Waste Management and Material Pollution Control		
WM-1	Material Delivery	X[2]
WM-2	Material Use	X[2]
WM-3	Stockpile Management	
WM-4	Spill Prevention and Control	X[2]
WM-5	Solid Waste Management	X[2]
WM-6	Hazardous Waste Management	
WM-7	Contaminated Soil Management	
WM-8	Concrete Waste Management	
WM-9	Sanitary/Septic Waste Management	X[2]
WM-10	Liquid Waste Management	

[1] Additional BMPs may be required based on actual field condition, Contractor operations, or construction operations.

[2] Not all minimum requirements may be applicable to every project. Applicability to a specific project shall be verified by the Permittee or Authorized Representative and their Contractor.

[3] The Permittee or Authorized Representative and their Contractors shall select one of the identified soil stabilization BMPs or a combination thereof.

[4] The Permittee or Authorized Representative and their Contractors shall select one of the identified sediment control barrier BMPs or a combination thereof.

[5] Dewatering BMPs are required for discharging accumulated precipitation (rain and snow melt) and for potential contact with groundwater during excavation. Separate permit requirements are applicable for construction dewatering of groundwater.

Notice of Non-Permitted Discharge

To: _____ **Date:** _____

Subject: **Notice of Discharge**

Project Name:_____

Permit Number:_____

Date, time, and location of discharge:_____

Type of operation that resulted in the discharge:_____

Describe any adverse impacts resulting from the discharge:_____

Describe existing BMP(s) in place prior to the discharge event:_____

Date and type of corrective action or BMPs deployed after the discharge:_____

Proposed corrective actions to be taken to reduce, eliminate, and/or prevent recurrence of the discharge:_____

Name of Contact Person	*Title*
Company	*Telephone Number*
Signature	*Date*

APPENDIX VIII

PROJECT CONSTRUCTION SIGNS

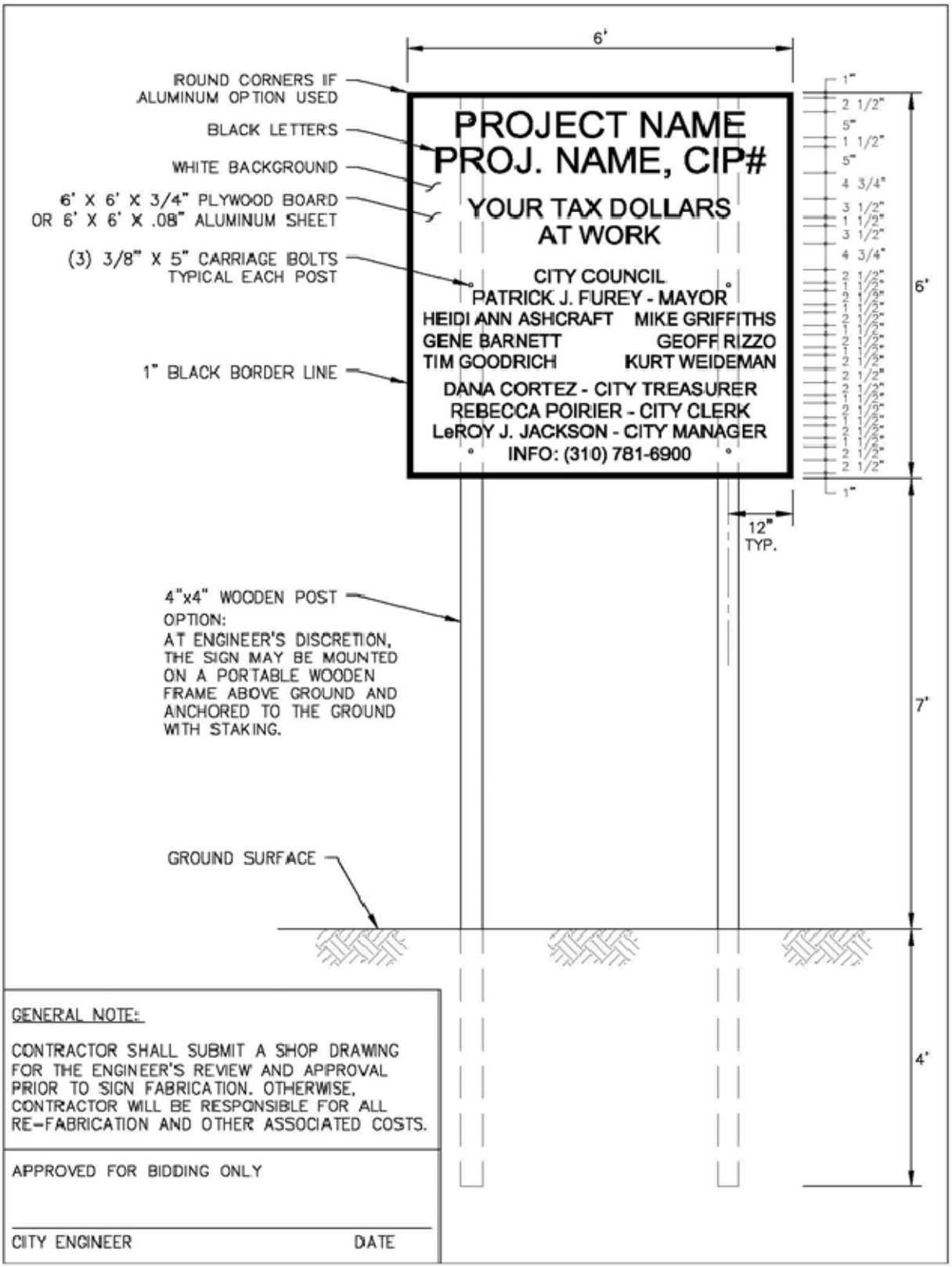

GENERAL NOTE:

CONTRACTOR SHALL SUBMIT A SHOP DRAWING FOR THE ENGINEER'S REVIEW AND APPROVAL PRIOR TO SIGN FABRICATION. OTHERWISE, CONTRACTOR WILL BE RESPONSIBLE FOR ALL RE-FABRICATION AND OTHER ASSOCIATED COSTS.

APPROVED FOR BIDDING ONLY

CITY ENGINEER DATE

APPENDIX IX

CENTERLINE TIES AND BENCHMARK INFORMATION

SURVEY OF 182ND ST. INDEX PWFB 0618 PAGE 616

JOB NO. X5000067 SURVEY NOTES CONST. TIES

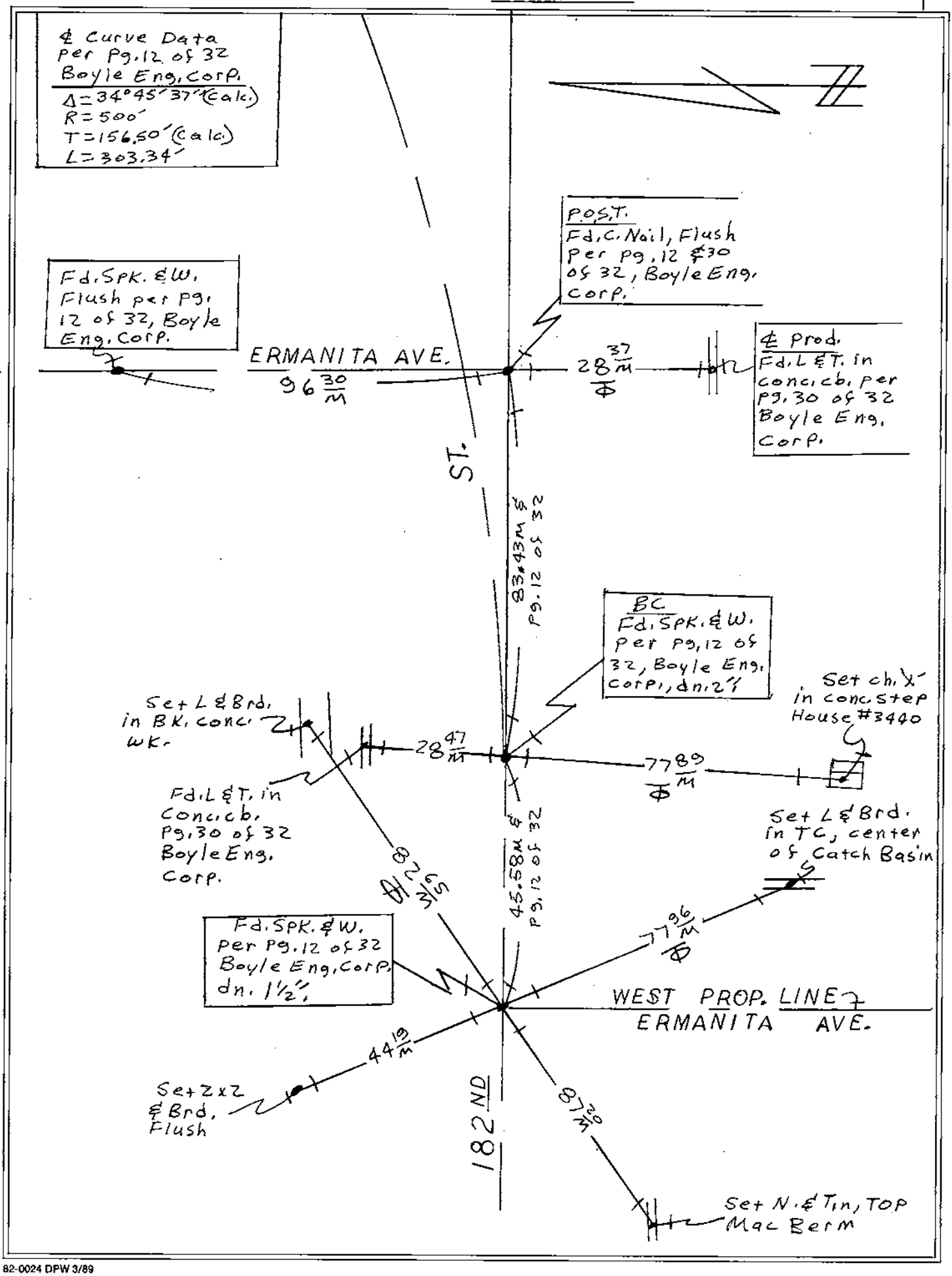

3rd FLOOR 900 S. FREMONT AVE., ALHAMBRA, CA 91803

CHECKED BY _____ DATE _____

COUNTY OF LOS ANGELES DEPARTMENT OF PUBLIC WORKS

SURVEY BY MENDENHALL DATE 7-10-90

82-0024 DPW 3/89

SURVEY OF 182ND ST. INDEX PWFB 0618 PAGE 616 A

JOB NO. X5000067 RETIES SURVEY NOTES

PWFB 0618-616A

To Bottom PWFB 0618-617A

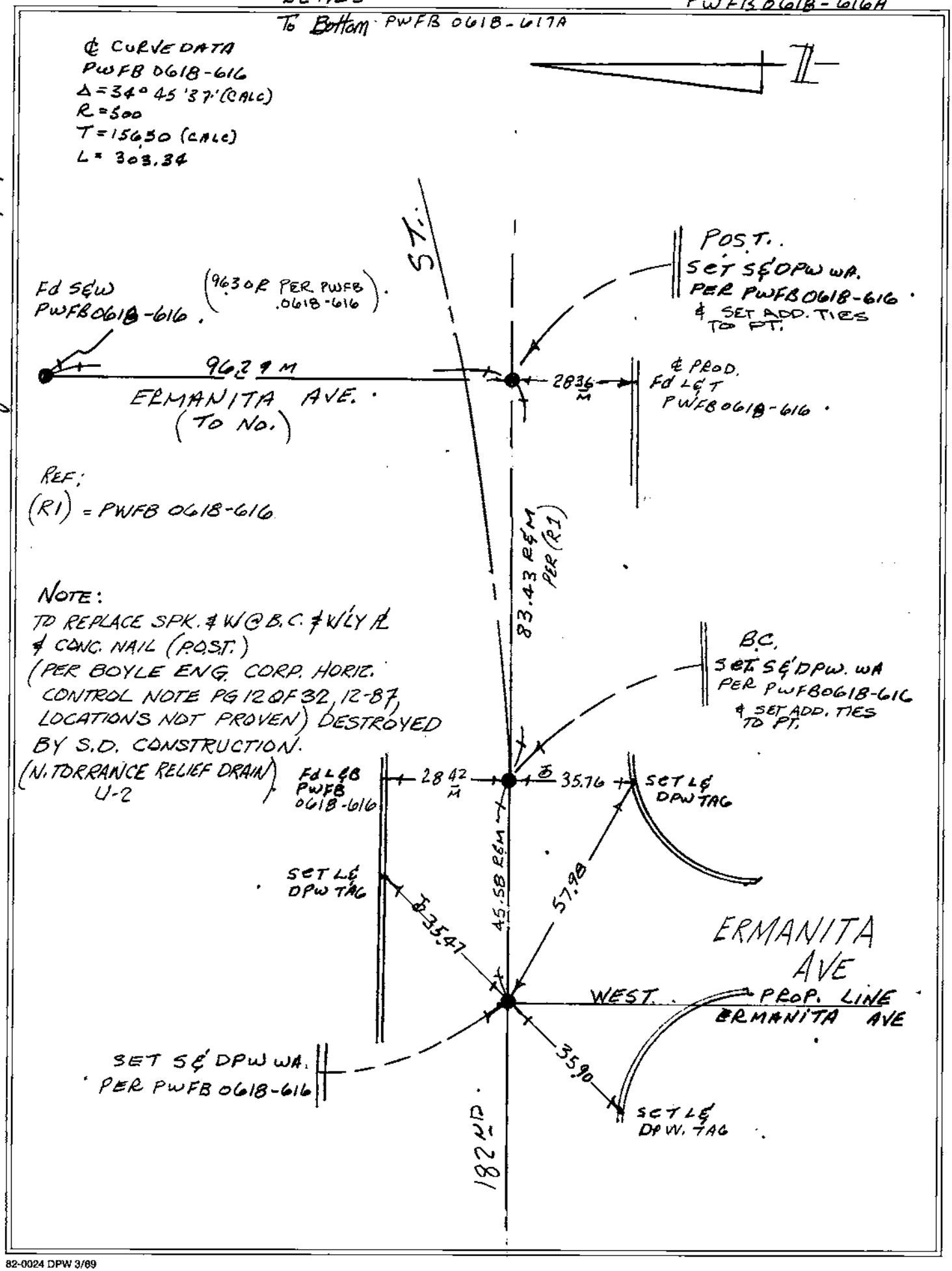

3rd FLOOR 900 S. FREMONT AVE., ALHAMBRA, CA 91803
CHECKED BY _____ DATE 4/14/93

COUNTY OF LOS ANGELES DEPARTMENT OF PUBLIC WORKS
SURVEY BY O. SHROM DATE 2-13-92

82-0024 DPW 3/69

CORNER RECORD PWFB 0618 Document Number 847

City of Torrance County of Los Angeles, California

Brief Legal Description 177 th Street & Yukon Avenue.

COORDINATES (Optional)

N.
E.
Zone NAD27 ☐ NAD83 ☐
NAD83 Epoch
Elev.
Vert. Datum: NGVD29 ☐ NAVD88 ☐
Meas. Units: Metric ☐ Imperial ☐
U.S. Survey foot ☐

CORNER TYPE

Government Corner ☐ Control ☐
Meander ☐ Property ☐
Rancho ☐ Other ■

Date of Survey 7/01/2003

Corner — Left as found ☐ Found and tagged ☐ Established ☐ Reestablished ■ Rebuilt ☐

Identification and type of corner found; Evidence used to identify or procedure used to establish or reestablish the corner:

Found as described on the reverse of this sheet.

A description of the physical condition of the monument as found and as set or reset:

These ties are for the purpose of perpetuating the found monumentation. No claim is made as to the relationship of the points or lines shown hereon to true boundary location.

LICENSED LAND SURVEYOR LARRY V. CASE No. 5411 Exp. 9/30/04 STATE OF CALIFORNIA

SURVEYOR'S STATEMENT

This Corner Record was prepared by me or under my direction in conformance with the Land Surveyor's Act on 7/18/2003

Signed L.S. or R.C.E. No. L.S. 5411

COUNTY SURVEYOR'S STATEMENT

This Corner Record was received JUL 31 2003

and examined and filed AUG 21 2003

Signed Douglas W. Joslin L.S. or R.C.E. No.

Title DEPUTY COUNTY SURVEYOR

LICENSED LAND SURVEYOR DOUGLAS W. JOSLIN SEAL L.S. 6363 EXP 12/31/06 STATE OF CALIFORNIA

County Surveyor's Comment BRR

TIES-FILED AS SUBMITTED

Document Number 848

TIES-FILED AS SUBMITTED

R-1 = CITY OF TORRANCE TIE NOTES.
NO BOOK & NO PAGE No.

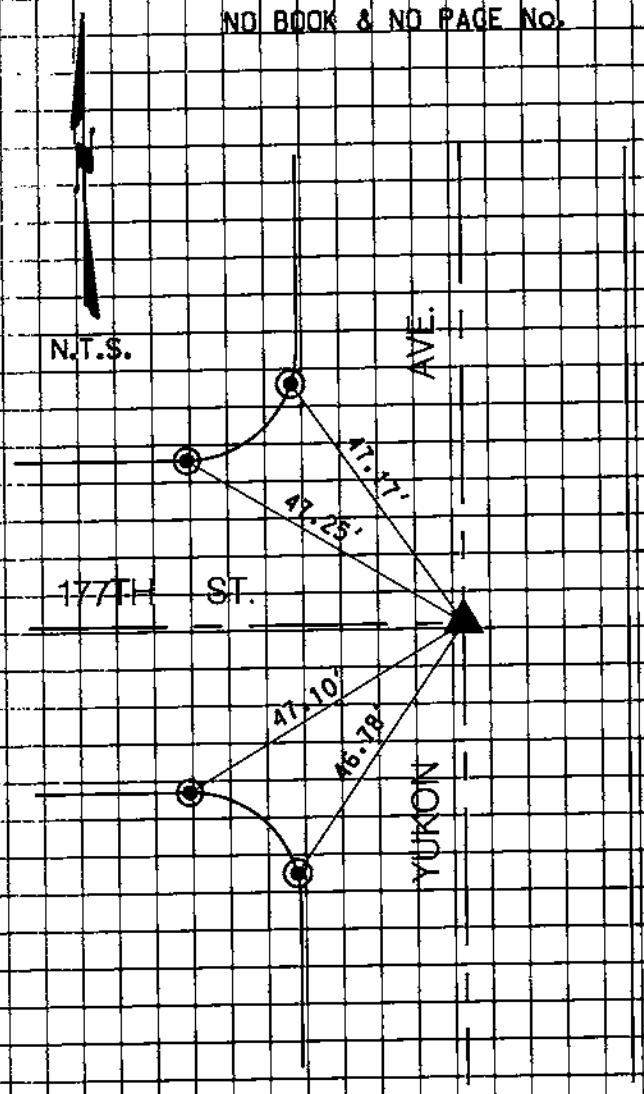

▲ FD. NOTHING SET PK/W TAG L.S. 5411 PER R-1 AFTER CONST.

◉ FD. L/T PER R-1. ADDED TAG L.S. 5411.

CASE LAND SURVEYING, INC.
1010 N. Batavia Street, Suite D
Orange, CA. 92867
tel: 714/628-8948 fax: 714/628-8905

The purpose of this record is to document the perpetuation of found monument(s). No claim is made regarding the correctness of the position(s) of said monument(s), nor the dimensional relationship to street center lines or property boundaries.

PWFB 0618

CORNER RECORD

Document Number 900

City of TORRANCE County of LOS ANGELES, California

Brief Legal Description ARTESIA BOULEVARD & YUKON AVENUE

TB 763 F1

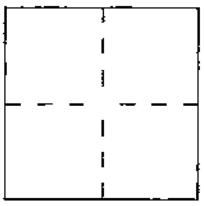

CORNER TYPE

Government Corner ☐ Control ☐
Meander ☐ Property ☐
Rancho ☐ Other ☒

Date of Survey OCTOBER 13, 2004

COORDINATES (Optional)

N.
E.
Zone NAD27 ☐ NAD83 ☐
NAD83 Epoch
Elev.
Vert. Datum: NGVD29 ☐ NAVD88 ☐
Meas. Units: Metric ☐ Imperial ☐
U.S. Survey foot ☐

Corner — Left as found ☒ Found and tagged ☐ Established ☐ Reestablished ☐ Rebuilt ☐

Identification and type of corner found; Evidence used to identify or procedure used to establish or reestablish the corner:
AS DESCRIBED.

A description of the physical condition of the monument as found and as set or reset: AS DESCRIBED.

SURVEYOR'S STATEMENT

This Corner Record was prepared by me or under my direction in conformance with the Land Surveyor's Act on OCTOBER 28,2004

Signed Ruel del Castillo L.S. or R.C.E. No. 4212

EXP. 6/30/06

LICENSED LAND SURVEYOR RUEL DEL CASTILLO EXP. 6/30/06 SEAL L.S. 4212 STATE OF CALIFORNIA

COUNTY SURVEYOR'S STATEMENT

This Corner Record was received DEC 20 2004

and examined and filed JAN 19 2005

Signed Douglas W. Joslin L.S. or R.C.E. No.

Title DEPUTY COUNTY SURVEYOR

LICENSED LAND SURVEYOR DOUGLAS W. JOSLIN SEAL L.S. 6363 EXP 12/31/06 STATE OF CALIFORNIA

County Surveyor's Comment

SMG 1-19-05

F0115-5

ARTESIA BOULEVARD & YUKON AVENUE

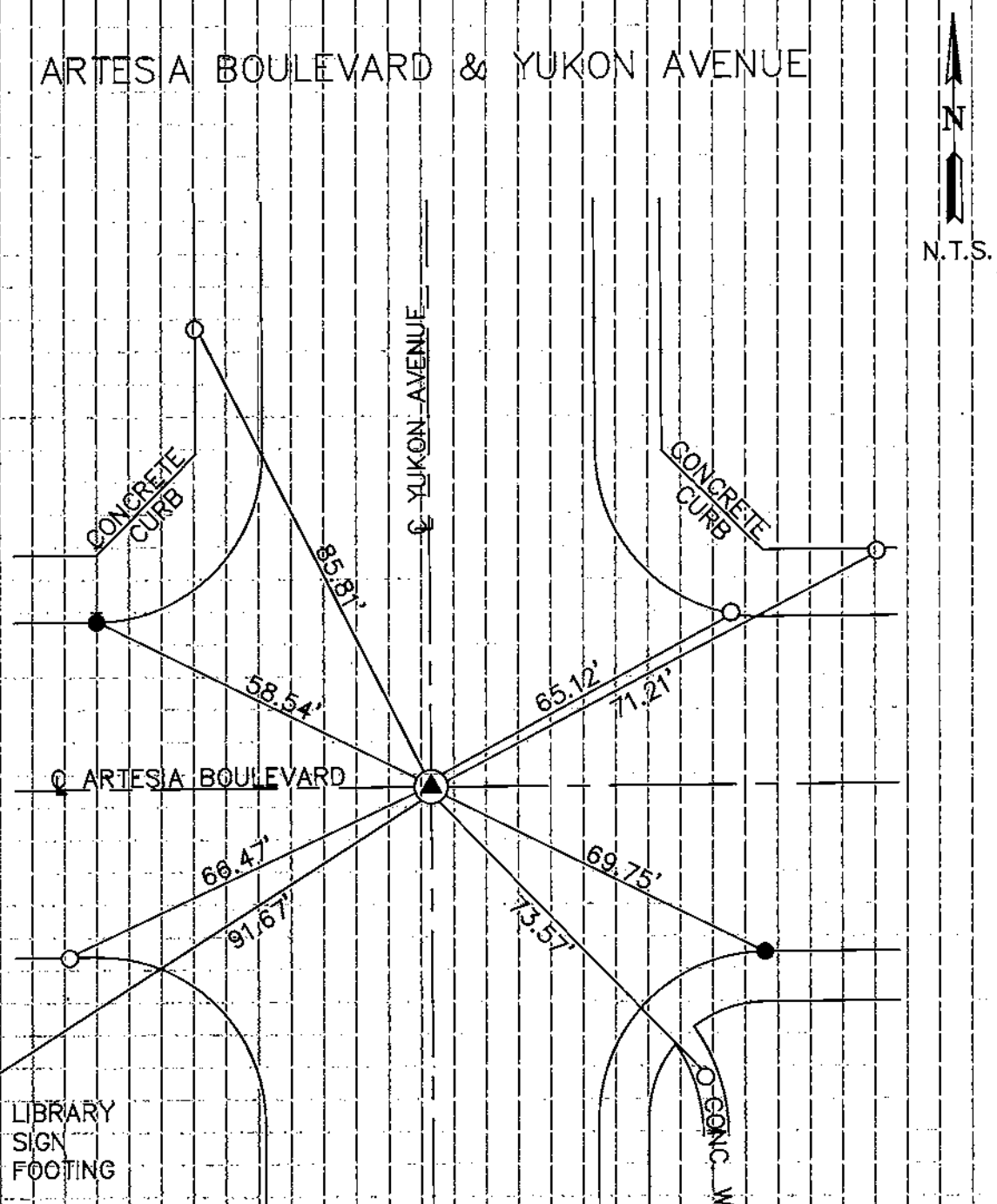

LEGEND:

▲ SET PUNCH SPIKE & WASHER "LS 4212" REPLACING FD. PUNCHED SQUARE SPIKE & WASHER, DESTROYED BY CONSTRUCTION.

● FD. LEAD & TACK.

○ SET LEAD, TACK & TAG "LS 4212".

NOTE: THESE TIES ARE FOR THE PURPOSE OF PERPETUATING THE FOUND MONUMENTATION. NO CLAIM IS MADE AS TO THE RELATIONSHIP OF THE POINTS OR LINES SHOWN HEREON TO THE TRUE BOUNDARY LOCATIONS.

SURVEY OF PRAIRIE AVE INDEX PWFB 0618 PAGE 1204

JOB NO. J54072 SURVEY NOTES

R1 = PWFB 0618 - 651

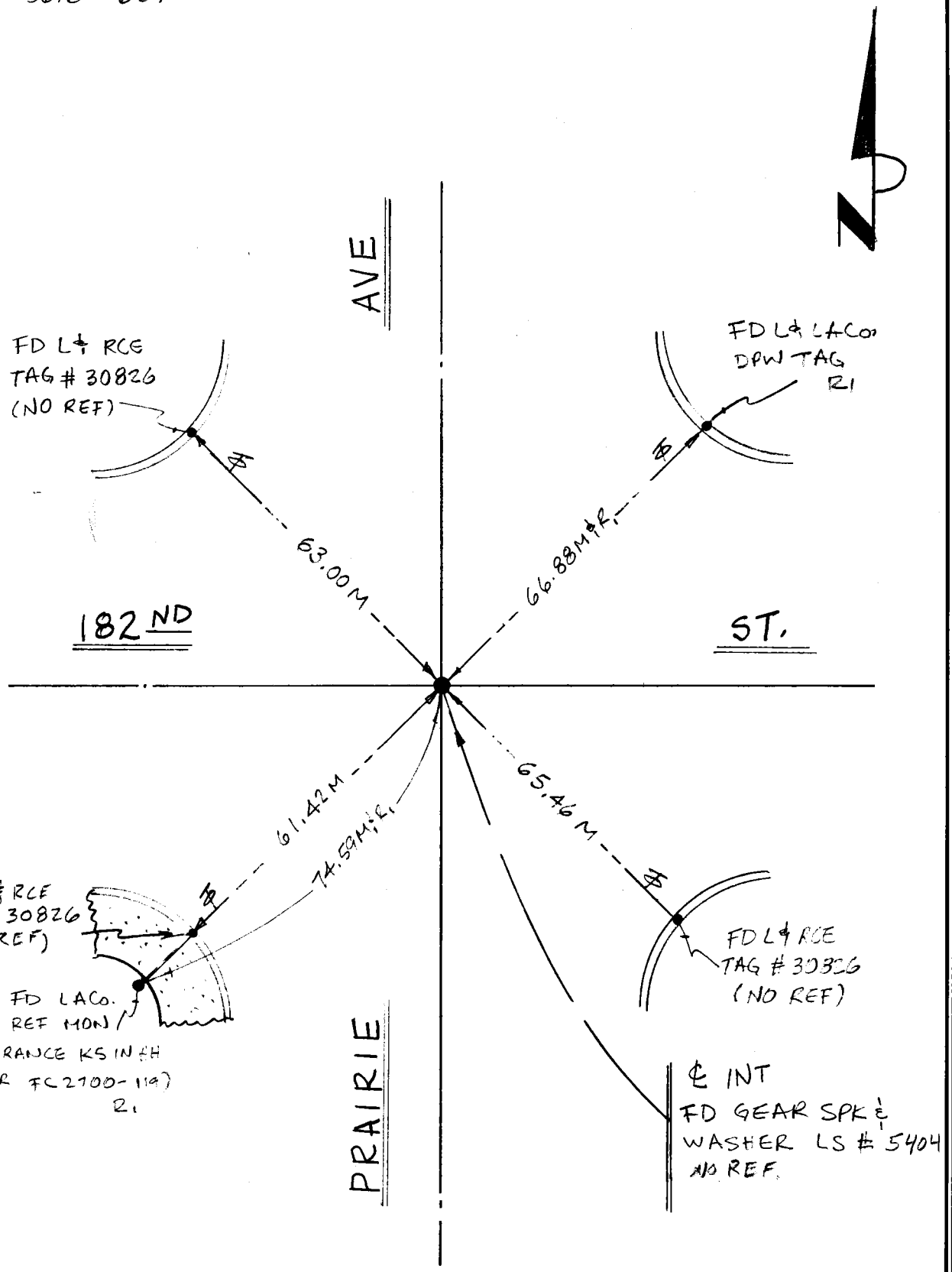

COUNTY OF LOS ANGELES DEPARTMENT OF PUBLIC WORKS
SURVEY BY D. CURIEL DATE 6/21/12
4TH FLOOR 900 S. FREMONT AVE., ALHAMBRA, CA 91803
CHECKED BY RJM DATE 6/25/12

82-0024 DPW Rev.8/99

LOS ANGELES COUNTY
DEPARTMENT OF PUBLIC WORKS

BENCHMARKS

HAWTHORNE / TORRANCE QUAD

2005 ADJUSTMENT
2005 BASELINE
NAVD 88 DATUM FOOT / METER

PREFACE

The Department of Public Works level net is composed of more than 1,700 miles or 2720 kilometers of levels supporting in excess of 9,000 benchmarks. Previously when a major readjustment of the net was undertaken, to emphasize the complete break with previous elevations, the CY, CG, and CL, series benchmarks were re-labeled DY, DG, and DL, respectively. Beginning in 1993 the Baseline readjustment year will be indicated on Baseline BM's, as indicated below (*). Henceforth all BM numbers will be labeled as a Y, G, or L series that will no longer indicate the major adjustment year.

To facilitate the adjustment, indexing and distribution of the adjusted values of the net, the county territory was divided into 33 quads or areas. For the identification purposes each quad was given a name (i.e. "Rosemead"," La Mirada", and "Santa Fe"…etc). When benchmarks and elevations in the quad are used, the name of the bench and quad must be stated in the description, i.e.:

(*)	*BASELINE*	*90.057*	*L&BR IN CTR OF CB RET @ NE COR*	***Y 9191***
	(1990)	*295.461*	*LA HABRA BLVD & VALLEY HOME AVE*	

It is expected that this general adjustment will for the most part remain sound for 8 to 10 years. Updating constrained adjustments will continue in the future. When a quad is readjusted, new elevations will be published and the date of readjustment will be noted in the benchmark description. Two benchmarks with different adjustment dates will not normally agree with each other.

The basic accuracy of the net is reflected by an indicated field probable error of ± 0.017 feet per mile (4mm per kilometer) of leveling as determined from conditions of closure. However, many years of experience in vertical control in the greater Los Angeles basin and Antelope Valley indicates that because of varying degrees of subsidence and heaving, the true datum is recovered only by obtaining substantial agreement of a number of benchmarks.

The users of this network of benchmarks are invited to assist in its maintenance by notifying this department of cases of obliteration, apparent mistakes in descriptions or elevations, and the disturbance of benchmarks.

Datum: North American Vertical Datum of 1988 (NAVD88)
Note: NAVD 1988 minus approximately 2.3 feet (70 cm) equals NGVD 1929 Datum. For more accurate equations at individual benchmarks refer to previous publications.

Abbreviations used in Benchmark Descriptions

Abbreviations	***Descriptions***		***Abbreviations***	***Descriptions***
ABUT	Abutment		*LT*	Lead and Tack
ALG	Along		*LACE*	Los Angeles City Engineer
ANG PT	Angle Point		*LACS*	La County Engineer
B/W	Back of Walk		*LAFC*	La County Flood Control
BCR	Begin Curb Return		*L&BN*	Lead and Bench Nail
BC	Begin Curve		*L&BR*	Lead and Brad
BLDG	Building		*L&N*	Lead and Nail
BM	Benchmark		*L&SPK*	Lead and Spike
BT SPK	Boat or Bolt Spike		*L&T*	Lead and Tack
BR CAP	Brass Cap Monument		*MCR*	Middle Curb Return
C B	Catch Basin		*MKD*	Marked
CTR	Center		*MC*	Middle Curve
C/L	Centerline		*MON*	Monument
C/L INT	Centerline Intersection		*N/O*	North of
C/L PROD	Centerline Produced		*NR*	Near
CONC	Concrete		*OPP*	Opposite
COR	Corner		*PI*	Point of Intersection
COE	Corps of Engineers		*PK&W*	PK Nail and Washer
CULV	Culvert		*P/L*	Property Line
CYN	Canyon		*POST*	Point on Simi-Tangent
CB	Curb		*PP*	Power Pole
CS MON	Co. Eng. Monument		*PVMT*	Pavement
CT SPK	Cut Spike		*PROD*	Produced
DPW	Dept of Public Works		*RD*	Road
DR	Driveway		*RDBM*	Road Dept Benchmark
E/O	East of		*RDBM TAG*	Road Dept Benchmark Tag
ECR	End Curb Return		*RR*	Railroad
EC	End Curve		*R/W*	Right of Way
ENT	Entrance		*SDMH*	Storm Drain Manhole
FL	Flow line		*SMH*	Sewer Manhole
FTG	Footing		*SPK*	Spike
FRWY	Freeway		*ST&W*	Spike Tin and Washer
F/W	Front of Walk		*S/O*	South of
GAR	Garage		*TP*	Telephone Pole
HDWL	Head Wall		*USC&GS*	US Coast and Geodetic Survey
HSE	House		*USGS*	US Geological Survey
HWY	Highway		*WK*	Walk
INT	Intersection		*W/O*	West of
IP	Iron Pipe			

QUAD COVERAGE INDEX MAP

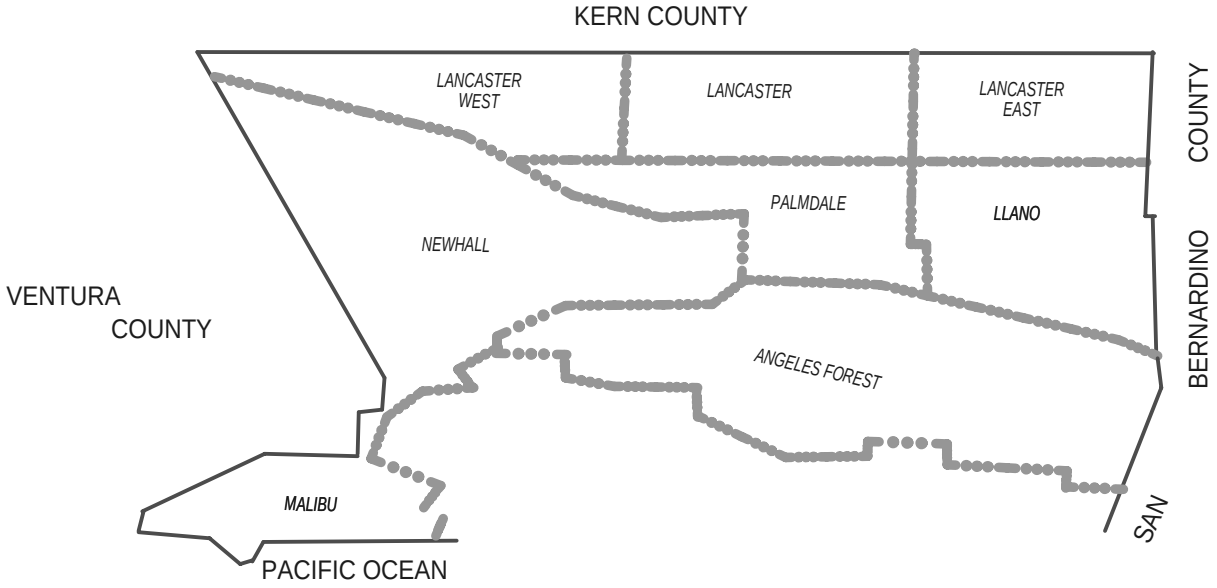

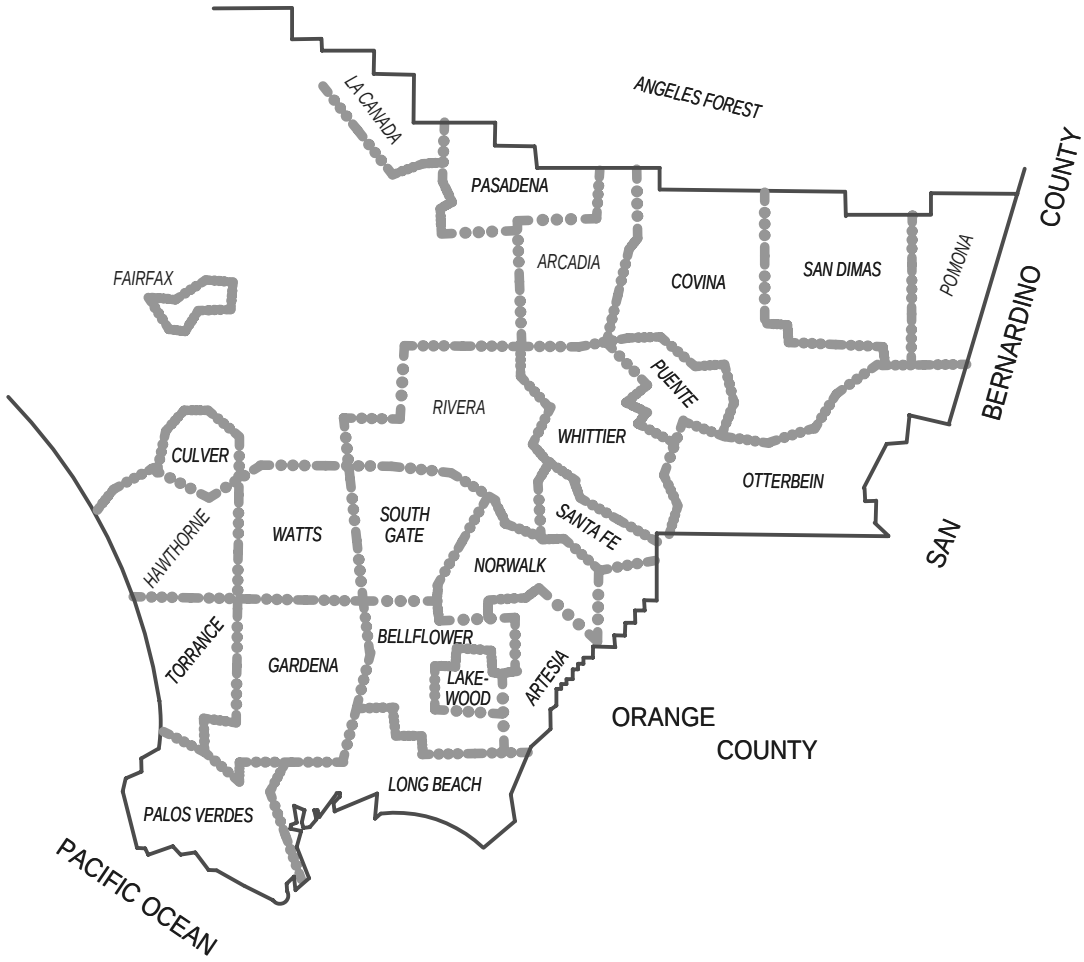

HAWTHORNE - TORRANCE QUAD INDEX

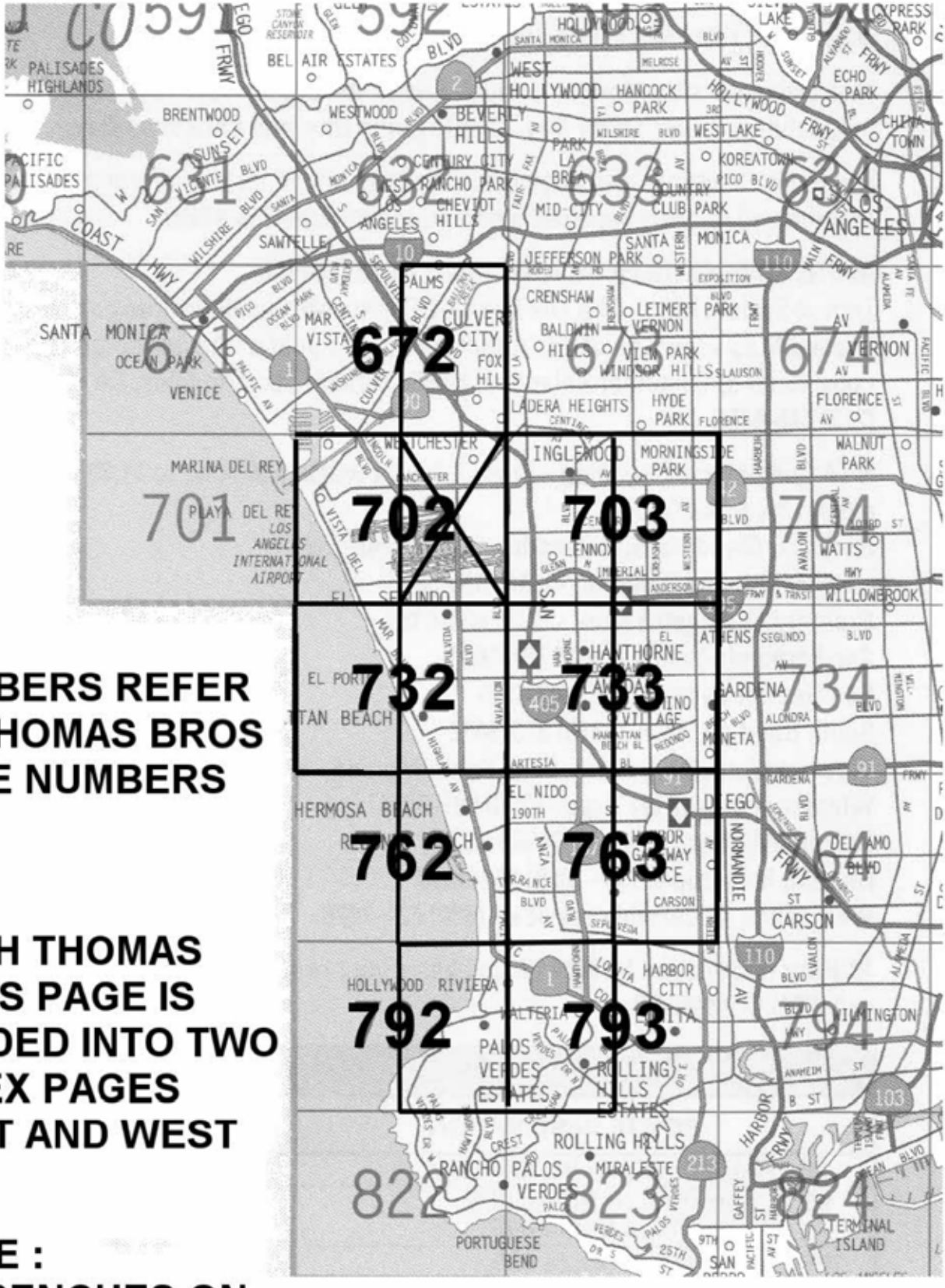

NUMBERS REFER TO THOMAS BROS PAGE NUMBERS

EACH THOMAS BROS PAGE IS DIVIDED INTO TWO INDEX PAGES EAST AND WEST

NOTE :
NO BENCHES ON MAP 702 EAST

TO MAP 703 EAST

TO MAP 763 EAST

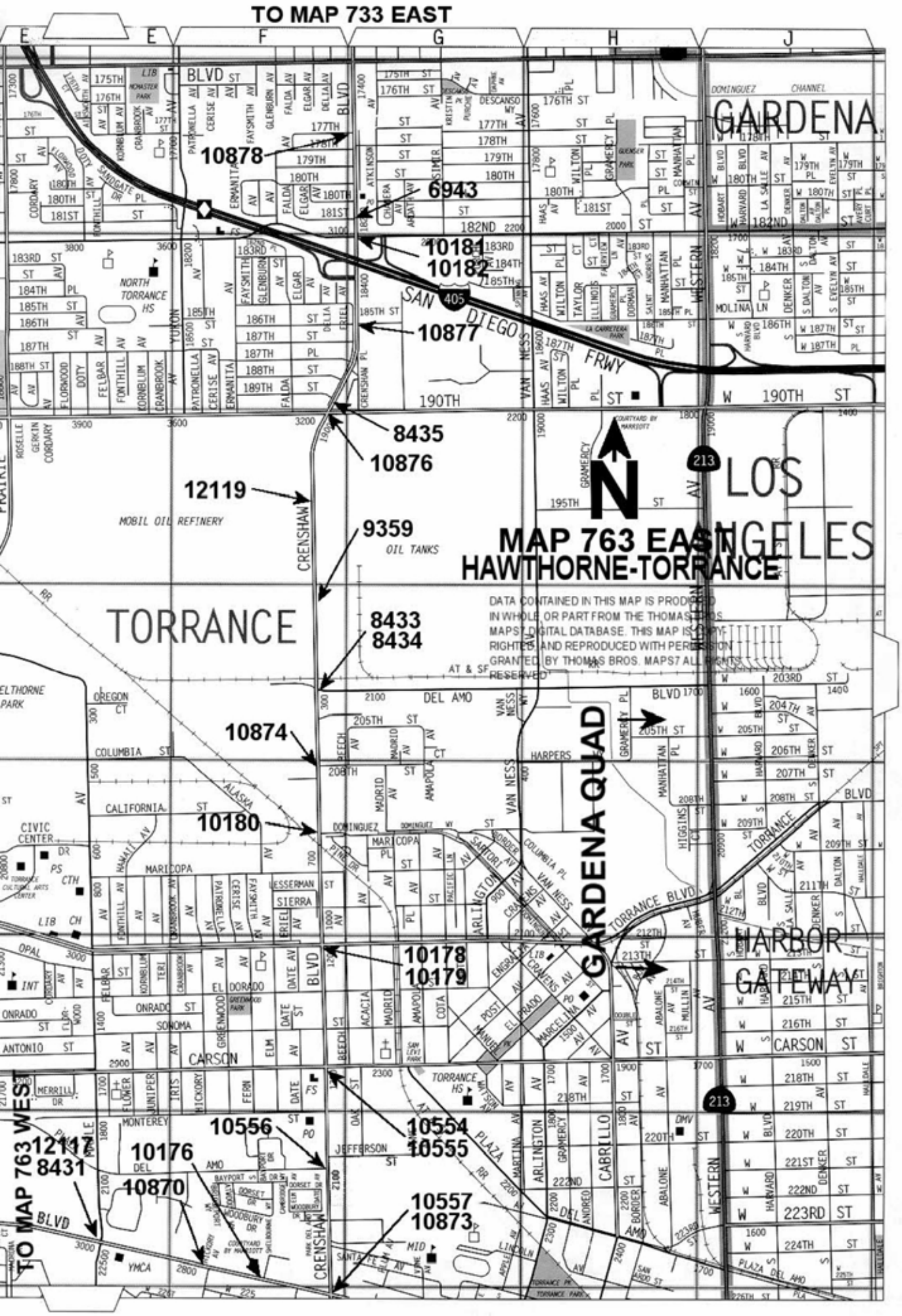
TO MAP 733 EAST
MAP 763 EAST
HAWTHORNE-TORRANCE
DATA CONTAINED IN THIS MAP IS PRODUCED IN WHOLE OR PART FROM THE THOMAS BROS. MAPS7 DIGITAL DATABASE. THIS MAP IS COPYRIGHTED AND REPRODUCED WITH PERMISSION GRANTED BY THOMAS BROS. MAPS7 ALL RIGHTS RESERVED
TO MAP 763 WEST
GARDENA
LOS ANGELES
TORRANCE
HARBOR GATEWAY
GARDENA QUAD
SAN DIEGO FRWY
MOBIL OIL REFINERY
OIL TANKS
NORTH TORRANCE HS
TORRANCE HS
CIVIC CENTER
10878
6943
10181
10182
10877
8435
10876
12119
9359
8433
8434
10874
10180
10178
10179
10556
10554
10555
12117
8431
10176
10870
10557
10873

QUAD YEAR	ELEV FOOT/METER	DESCRIPTION	BM NUMBER	
BASELINE (2005)	84.324 25.702	RD MON IN WELL 225MM(0.7FT) DN @ C/L INT ROSECRANS AVE & HINDRY AVE MKD (RD 1959)	Y	6867
BASELINE (2005)	116.662 35.559	CS MON IN WELL 2.4M(8FT) N/O N CF ROSECRANS AVE & 14.2M(47FT) W/O C/L PROD VILLAGE DR MKD (INGLEWOOD A-12A 1960 RM 3 RE 5869)	Y	6871
BASELINE (2005)	29.731 9.062	USC&GS MON 2ND STEP FR BOTTOM LEADING TO BEACH @ FT OF ROSECRANS AVE 5.5M(18FT) S/O C/L PROD & 8M(26.2FT) W/O C/L THE STRAND MKD (Y-614 1941) CO ENG #21-24	Y	6877
HAWTHORNE (2005)	13.275 4.046	LACE MON IN WALK 6M(19.7FT) W/O WLY CF 1.5M(5FT) N/O NLY CF @ NWLY COR 34.5M(113FT) W/O CULVER PL & 34.7M(114FT) N/O CULVER BLVD @ SHACK RESTAURANT MKD (26 M 11.65)	Y	6894
HAWTHORNE (2005)	97.380 29.682	BT SPK IN N CB @ W END OF FRWY BRIDGE @ NE COR ARBOR VITAE ST & LA CIENEGA BLVD 10.7M(35FT) N/O & 11M(36FT) E/O C/L INT	Y	6897
HAWTHORNE (2005)	97.094 29.594	L&BR IN W CB 1.8M(6FT) N/O BCR @ SW COR LA CIENEGA BL & ARBOR VITAE ST	Y	6898
BASELINE (2005)	98.815 30.119	SPK&L IN NW COR C.B. IN S CB 11.6M(38FT) S/O & 64M(211FT) E/O C/L INT PACIFIC COAST HWY & CALLE MAYOR "BM 21-55A" CHISELED IN THE CONCRETE	Y	6926
BASELINE (2005)	132.164 40.284	USC&GS MON W END CONC CULV 11.3M(37FT) S/O C/L PACIFIC COAST HWY 141M(0.1MI) E/O INT PASEO DE GRACIA OPP FROM & 23.2M(76FT) E/O MCCORMICK MORTUARY MKD (X-1053 1960)	Y	6927
TORRANCE (2005)	137.182 41.813	L&BN IN SLY CB 1FT E/O BCR @ SE COR AVIATION BLVD & FORD AVE 33FTS & 31FT E/O C/L INT STAMPED (BM)	Y	6930
TORRANCE (2005)	54.511 16.615	L&BR CONC WL OF POST OFFICE 12FT NLY OF CB @ NW COR PIER AVE & VALLEY DR 28FT WLY & 50FT NLY C/L INT	Y	6933
BASELINE (2005)	51.741 15.771	CS MON IN WELL 600MM(2FT) W/O CF @ SW COR CRENSHAW BLVD & MARINE AVE 58.2M(191FT) S/O & 12.2M(40FT) W/O C/L INT MKD (BM 22-1A 1953 RE 63)	Y	6936
BASELINE (2005)	49.636 15.129	SPK IN S CB 2.1M(7FT) W/O BCR @ SW COR CRENSHAW BL & MANHATTAN BEACH BL	Y	6937
BASELINE (2005)	65.669 20.016	L&BR IN S CB 900MM(3FT) W/O BCR @ SW COR CRENSHAW BLVD & 181ST ST	Y	6943
BASELINE (2005)	80.635 24.578	CS MON IN WELL 225MM(0.7FT) DN ON C/L MEDIAN HAWTHORNE BL 1.5M(5FT) E/O C/L & 37.8M(124FT) N/O C/L 230TH ST MKD (BM 22-15A 1960 RE 5869)	Y	6955
TORRANCE (2005)	104.124 31.737	L&BN N CB 36FT E/O OF BCR @ NE COR ARTESIA BLVD & AVIATION BLVD MKD (BM)	Y	7237
BASELINE (2005)	51.626 15.736	USC&GS BR DISC FL 2.4M(8FT) N/O CF & 3.8M(12.3FT) E/O CF @ NE COR AVE I & ESPLANADE AVE 12.2M(40FT) N/O & 13.4M(44FT) E/O C/L INT MKD (D 768 1945)	Y	7240
BASELINE (2005)	208.899 63.673	LACE MON IN WELL 250MM(0.8FT) DN @ C/L INT CRENSHAW BLVD & 76TH ST	Y	7843

QUAD YEAR	ELEV FOOT/METER	DESCRIPTION		BM NUMBER
BASELINE (2005)	86.030 26.222	L&T IN S CB 300MM(1FT) W/O BCR @ SW COR SEPULVEDA BLVD & ERIEL AVE	Y	10176
BASELINE (2005)	89.129 27.167	RDBM TAG IN E CB 300MM(1FT) N/O BCR @ NE COR CRENSHAW BL & TORRANCE BL	Y	10178
BASELINE (2005)	88.603 27.006	L&SPK IN N CB 1.8M(6FT) W/O BCR @ NW COR CRENSHAW BL & TORRANCE BL	Y	10179
BASELINE (2005)	78.085 23.800	RDBM TAG IN S CB 300MM(1FT) E/O BCR @ @ SE COR CRENSHAW BL & DOMINGUEZ ST	Y	10180
BASELINE (2005)	63.405 19.326	RDBM TAG IN W CB 300MM(1FT) S/O BCR @ SW COR CRENSHAW BL & 182ND ST	Y	10181
BASELINE (2005)	63.053 19.219	RDBM TAG IN W CB 300MM(1FT) S/O BCR @ NW COR CRENSHAW BL & 182ND ST	Y	10182
BASELINE (2005)	44.455 13.550	RDBM TAG IN E CB 300MM(1FT) S/O BCR @ SE COR CRENSHAW BLVD & REDONDO BEACH BLVD	Y	10183
BASELINE (2005)	44.859 13.673	RDBM TAG IN CB RET 2.7M(9FT) S/O BCR @ NE COR CRENSHAW BLVD & REDONDO BEACH BLVD	Y	10184
BASELINE (2005)	55.050 16.779	RDBM TAG IN CB 300MM(1FT) S/O BCR @ NW COR CRENSHAW BLVD & BROADWAY AV	Y	10186
BASELINE (2005)	216.481 65.984	CITY OF INGLEWOOD TAG IN CB RET 5.2M(17FT) E/O BCR @ SW COR CRENSHAW BL & PINCAY DR (TO THE W)	Y	10190
TORRANCE (2005)	56.468 17.211	L&SPK IN E CB 4.2M(13.6FT) S/O BCR @ SE COR ESPLANADE AVE & AVE D	Y	10260
TORRANCE (2005)	58.897 17.952	DPW BM TAG IN E CB 1.5M(5FT) N/O BCR @ NE COR ESPLANADE & SAPPHIRE ST @ C. B.	Y	10262
TORRANCE (2005)	110.436 33.661	DPW BM TAG IN S CB 900MM(3FT) W/O BCR @ SW COR TORRANCE BL & HAWTHORNE BL	Y	10263
TORRANCE (2005)	42.113 12.836	DPW BM TAG IN N CB 300MM(1FT) E/O BCR @ NE COR CATALINA AVE & CARNELIAN ST	Y	10267
TORRANCE (2005)	19.908 6.068	DPW BM TAG IN E CB HARBOR DR 600MM(2FT) N/O BCR 8.5M(28FT) E/O C/L OPP ST #209 (N/O INT WITH PACIFIC AVE)	Y	10268
TORRANCE (2005)	19.897 6.065	DPW BM TAG IN WLY CB 1.5M(5FT) S/O C/L PROD HARBOR DR 19.5M(64FT) S/O BC OF CURVE HARBOR DR & 8.6M(28.5FT) W/O C/L (N/O INT WITH PACIFIC AVE)	Y	10269
TORRANCE (2005)	15.935 4.857	L&BR IN W CB 600MM(2FT) S/O BCR @ SW COR HARBOR DR & PORTOFINO WAY	Y	10270
TORRANCE (2005)	15.595 4.753	L&BR IN CTR CB RET @ NW COR PORTOFINO WAY & HARBOR DR	Y	10271
TORRANCE (2005)	25.613 7.807	DPW BM TAG IN E CB OF ISLAND 12.8M(42FT) N/O & 900MM(3FT) E/O C/L INT HERMOSA AVE & TWENTYFIFTH ST	Y	10273

QUAD YEAR	ELEV FOOT/METER	DESCRIPTION		BM NUMBER
BASELINE (2005)	72.904 22.221	DPW BM TAG IN E CB 1M(3.3FT) N/O BCR @ NE COR CRENSHAW BLVD & 208TH ST	Y	10874
BASELINE (2005)	62.054 18.914	DPW BM TAG IN W CB 19.6M(64FT) S/O BCR @ SW COR 190TH ST & CRENSHAW BL	Y	10876
BASELINE (2005)	62.959 19.190	DPW BM TAG IN W CB (W SER RD) CRENSHAW BLVD 1M(3.3FT) S/O BCR 4.3M(14FT) W/O C/L & 14M(46FT) S/O C/L 186TH ST	Y	10877
BASELINE (2005)	61.293 18.682	DPW BM TAG IN W CB 1.2M(4FT) N/O BCR @ NW COR 177TH ST & CRENSHAW BLVD	Y	10878
BASELINE (2005)	47.171 14.378	DPW BM TAG IN E CB 1.2M(4FT) S/O BCR @ SE COR 170TH ST & CRENSHAW BLVD	Y	10879
BASELINE (2005)	52.311 15.944	DPW BM TAG IN W CB 1M(3.3FT) N/O BCR @ NW COR CRENSHAW BLVD & 154TH ST	Y	10880
BASELINE (2005)	50.583 15.418	DPW BM TAG IN W CB 1M(3.3FT) S/O BCR @ SW COR CRENSHAW BLVD & 147TH ST	Y	10881
BASELINE (2005)	50.856 15.501	DPW BM TAG IN S CB 1M(3.3FT) W/O BCR @ SW COR LEMOLI AVE & ROSECRANS AVE	Y	10893
BASELINE (2005)	94.396 28.772	CITY MANHATTAN BEACH 40MM(1-1/2IN) BR DISC IN S CB 1.4M(5FT) W/O BCR @ SW COR ROSECRANS AVE & PARKWAY DR S MKD (CMB BM 93-14)	Y	10897
BASELINE (2005)	95.046 28.970	DPW BM TAG IN W CB 2M(6.5FT) N/O BCR @ NW COR NASH ST & ROSECRANS AVE	Y	10898
BASELINE (2005)	110.971 33.824	RAM SET IN S CB @ BCR @ SW COR ROSECRANS AVE & BLANCHE RD	Y	10899
BASELINE (2005)	82.838 25.249	DPW BM TAG IN N CB 1M(3.3FT) W/O BCR @ NW COR PACIFIC COAST HWY & OCEAN AVE	Y	10900
BASELINE (2005)	85.765 26.141	DPW BM TAG IN CONC BASE ON S SIDE OF NLY MOST COLUMN OF PED OVERPASS PACIFIC COAST HWY 14.3M(47FT) N/O C/L 37.2M(122FT) W/O E DRWY (NR SO HIGH SCHOOL 4801 PCH)	Y	10901
BASELINE (2005)	86.504 26.366	DPW BM TAG IN N CB 1M(3.3FT) E/O BCR @ NE COR PACIFIC COAST HWY & W DRWY ENT TO SOUTH TORRANCE HIGH SCHOOL #4801 PCH	Y	10902
TORRANCE (2005)	68.970 21.022	DPW BM TAG IN W CB ESPLANADE AVE & 1M(3.3FT) N/O C/L PROD TOPAZ ST	Y	10903
TORRANCE (2005)	70.965 21.630	DPW BM TAG IN E CB 3M(10FT) N/O BCR @ NE COR CATALINA AVE & EMERALD ST	Y	10904
TORRANCE (2005)	29.131 8.879	DPW BM TAG IN W CB 1M(3.3FT) S/O BCR @ SW COR CATALINA AVE & PACIFIC AVE	Y	10905
TORRANCE (2005)	19.825 6.043	ARMY CORP OF ENG BR DISC IN E CB HARBOR DR 1.7M(6FT) N/O BCR 8.6M(28FT) E/O C/L @ LT STD #156 OPP ST #209 (N/O INT WITH PACIFIC AVE)	Y	10906

QUAD YEAR	ELEV FOOT/METER	DESCRIPTION		BM NUMBER
BASELINE (2005)	99.761 30.407	L&DPW TAG IN S CB 6.1M(20FT) E/O ECR @ SE COR PACIFIC COAST HWY & HAWTHORNE BL	Y	12113
BASELINE (2005)	83.510 25.454	L&DPW TAG IN N CB 300MM(1FT) W/O ECR @ NW COR PACIFIC COAST HWY & E ENT TO SOUTH HIGH SCHOOL	Y	12114
BASELINE (2005)	79.907 24.356	L&DPW TAG IN E CB 300MM(1FT) N/O ECR @ NE COR HAWTHORNE BL & 238TH ST	Y	12115
BASELINE (2005)	79.133 24.120	L&N IN E CB 300MM(1FT) S/O BCR @ SE COR HAWTHORNE BL & 234TH ST @ BLDG #23332	Y	12116
BASELINE (2005)	85.345 26.013	L&TAG IN E CB 300MM(1FT) S/O BCR @ SE COR SEPULVEDA BL & MAPLE AV	Y	12117
BASELINE (2005)	83.746 25.526	L&DPW TAG IN E CB 300MM(1FT) S/O OF THE BCR @ SE COR SEPULVEDA BL & HAWTHORNE BL (IN ISLAND)	Y	12118
TORRANCE (2005)	65.053 19.828	L&DPW TAG IN E CB 300MM(1FT) S/O OF THE BCR TO DR TO BLDG #19500 CRENSHAW BL @ GATE #12	Y	12119
TORRANCE (2005)	42.079 12.826	L&DPW TAG IN E CB 300MM(1FT) N/O OF THE ECR @ NE COR CRENSHAW BL & 166TH ST	Y	12120
TORRANCE (2005)	56.173 17.122	L&DPW TAG IN W CB 300MM(1FT) N/O OF THE BCR @ NW COR CRENSHAW BL & ARTESIA BL	Y	12121
TORRANCE (2005)	57.529 17.535	L&DPW TAG IN W CB 300MM(1FT) S/O OF THE BCR @ SW COR CRENSHAW BL & ARTESIA BL	Y	12122
TORRANCE (2005)	119.750 36.500	L&DPW TAG IN S CB 300MM(1FT) E/O OF THE ECR @ SE COR ARTESIA BL & INGLEWOOD AV	Y	12123
TORRANCE (2005)	93.727 28.568	L&DPW TAG IN S CB 300MM(1FT) W/O OF THE BCR @ SW COR ARTESIA BL & KINGSDALE AV	Y	12124
TORRANCE (2005)	49.341 15.039	L&DPW TAG IN N CB 300MM(1FT) W/O OF THE ECR @ NW COR MANHATTAN BEACH BL & LEMOLI AV	Y	12125
TORRANCE (2005)	50.103 15.271	L&DPW TAG IN W CB 300MM(1FT) N/O OF THE BCR @ NW COR PRAIRIE AV & 162ND ST	Y	12126
TORRANCE (2005)	75.863 23.123	L&DPW TAG IN N CB 300MM(1FT) E/O OF THE BCR @ NE COR REDONDO BEACH BL & FREEMAN AV	Y	12127
TORRANCE (2005)	63.218 19.269	L&DPW TAG IN E CB 300MM(1FT) S/O OF THE BCR @ SE COR INGLEWOOD AV & MARINE AV	Y	12128
TORRANCE (2005)	98.663 30.073	LS TAG #5411 IN N CB 1.2M(4FT) E/O BCR @ NE COR ARTESIA BL & PHELAN LN	Y	12129
TORRANCE (2005)	110.283 33.614	LS TAG #5411 IN N CB 1.5M(5FT) W/O ECR @ NW COR ARTESIA BL & VAIL AV	Y	12130
TORRANCE (2005)	111.171 33.885	LS TAG #5411 IN N CB 600MM(2FT) E/O BCR @ NE COR ARTESIA BL & RINDGE LN	Y	12131

APPENDIX X

GEOTECHNICAL STUDY REPORT – NTWFP PRE-DESIGN

Converse Consultants

Geotechnical Engineering, Environmental & Groundwater Science, Inspection & Testing Services

GEOTECHNICAL STUDY REPORT
North Torrance Wellfield Project
Torrance, California

Converse Project No. 10-31-228-01

August 11, 2011

PREPARED FOR:

AECOM
1501 Quail Street
Newport Beach, CA 92660

222 East Huntington Drive, Suite 211, Monrovia, California 91016-3500
Telephone: (626) 930-1200 ♦ Facsimile: (626) 930-1212 ♦ e-mail: converse@converseconsultants.com

Printed on Recycled Paper

Converse Consultants
Geotechnical Engineering, Environmental & Groundwater Science, Inspection & Testing Services

August 11, 2011

Mr. Russ Hulse, P.E.
AECOM
1501 Quail Street
Newport Beach, California 92660

Subject: **GEOTECHNICAL STUDY REPORT**
North Torrance Wellfield Project
Torrance, California
Converse Project No. 10-31-228-01

Dear Mr. Hulse:

Enclosed is the Geotechnical Study Report prepared by Converse Consultants (Converse) for the planned North Torrance Wellfield Project in the City of Torrance, California. Our services were performed in accordance with our proposal dated May 17, 2010, and our Subconsultant Agreement with AECOM dated October 15, 2010.

Based on the results of our background review and project-specific field exploration, laboratory testing, and geotechnical analysis, the site is considered suitable from a geotechnical standpoint for construction of the proposed facilities and pipelines associated with the North Torrance Wellfield Project, provided our conclusions and recommendations are implemented during design and construction.

We appreciate this opportunity to be of service to AECOM and the City of Torrance. If you should have any questions please do not hesitate to contact us at (626) 930-1200.

CONVERSE CONSULTANTS

William H. Chu, P.E., G.E.
Senior Vice President/Principal Engineer

Dist: 5/Addressee

GDS/SCL/WHC/amm

222 East Huntington Drive, Suite 211, Monrovia, California 91016-3500
Telephone: (626) 930-1200 ♦ Facsimile: (626) 930-1212 ♦ e-mail: converse@converseconsultants.com

Printed on Recycled Paper

PROFESSIONAL CERTIFICATION

This report for the proposed North Torrance Wellfield Project in Torrance, California has been prepared by the staff of Converse under the professional supervision of the individuals whose seals and signatures appear hereon.

The findings, recommendations, specifications or professional opinions contained in this report were prepared in accordance with generally accepted professional engineering and engineering geologic principles and practice in this area of Southern California. There is no warranty, either expressed or implied.

In the event that changes to the property or project occur, or additional, relevant information about the property is brought to our attention, the conclusions contained in this report may not be valid unless these changes and additional relevant information are reviewed and the recommendations of this report are modified or verified in writing.

REGISTERED PROFESSIONAL ENGINEER
CHI-HSIN LIN
No.2921
Exp. 9/30/12
GEOTECHNICAL
STATE OF CALIFORNIA

Sean C. Lin, Ph.D., P.E., G.E.
Senior Engineer

PROFESSIONAL GEOLOGIST
Geoffrey Daniel Stokes
NO. 2266
CERTIFIED
ENGINEERING
GEOLOGIST
Exp. 7/31/13
STATE OF CALIFORNIA

Geoffrey D. Stokes, P.G., C.E.G.
Senior Geologist

REGISTERED PROFESSIONAL ENGINEER
CHU HSUEH-HSIN WILLIAM
No. 2482
Exp. 6/30/12
GEOTECHNICAL
STATE OF CALIFORNIA

William H. Chu, P.E., G.E.
Senior Vice President / Principal Engineer

EXECUTIVE SUMMARY

The following is the summary of our Geotechnical Study Report with our findings, conclusions, and recommendations presented in the body of this report. Please refer to the appropriate sections of this Geotechnical Study Report for more detailed discussion of our conclusions and recommendations. In the event of a conflict between this executive summary and the report, or an omission in the summary, the report content shall prevail.

- The North Torrance Wellfield Project consists of the following elements:
  1. Well No. 10 within the 1.5 acre parcel west of Yukon Elementary School.
  2. Booster Pump Station and Utility building within the 1.5 acre parcel west of Yukon Elementary School.
  3. One three-million-gallon storage tank within the 1.5 acre parcel west of Yukon Elementary School.
  4. Well No. 11 planned southeast of Yukon Elementary School within an approximately 40-foot-wide strip of level land at the top of a 3- to 8-foot-high descending slope.
  5. New water pipelines to connect existing Well No. 9 at McMaster Park and planned Well No. 11 with the proposed storage tank site west of Yukon Elementary School.
  6. New drain pipeline installed below the Caltrans Right-of-Way (Interstate 405) for connection from the storage tank pipeline easement to the existing storm drain system located near the intersection of Yukon Avenue and W. 182nd Street.
- Our subsurface exploration was performed with the aid of truck-mounted hollow-stem auger borings drilled between depths of approximately 16.5 to 31.5 feet below existing grades.
- In general, soils below the well sites and planned pipeline alignments consist of relatively firm to stiff clay, based on soil type classification and sampling blow-count correlation. Undocumented fill soils ranging in depth from approximately 6.5 to 11.5 feet were encountered in the area of the proposed storage tank and booster pump/utility building. Remedial grading will be needed for foundation support.
- Groundwater levels monitored since 1949 have been recorded at depths of 75 feet or deeper from the ground surface. Groundwater was not encountered in the borings drilled to depths of up to 31.5 feet below grade. In general, groundwater is anticipated to fluctuate with seasonal variations but is not anticipated during construction of the planned improvements.
- The upper five (5) feet of native site soils sampled and tested have a medium expansion potential, and the upper five (5) feet of undocumented fill soils sampled and

tested have a very low expansion potential. Expansive soil mitigation measures for improvements supported on future fill soils derived from on-site and imported sources are recommended.

- Site soils (undocumented fill and native) have concentrations of water soluble sulfates considered non-corrosive to concrete.
- Laboratory testing indicates that site soils (undocumented fill and native) are considered potentially corrosive to ferrous metals.
- The fine-grained soils (undocumented fill and native) below the area of the planned storage tank and booster pump/utility building were tested for collapse/consolidation, with the test results indicating a moderate potential for consolidation under saturated conditions.
- The site is not located within a mapped Seismic Hazard Zone for either liquefaction or slope instability.
- There are no known active faults projecting toward or extending across the proposed site. The site is not situated within a currently designated Earthquake Fault Zone for ground rupture hazard.
- Although clear of geologic hazards associated with fault ground rupture, liquefaction, and slope instability, the site is located within a seismically active area and will be subject to intense ground motion during a significant seismic event. Site-specific parameters have been calculated in general accordance with the 2010 California Building Code.
- The planned at-grade structures for well equipment, storage tank and booster pump/utility building can be supported on shallow footings or slab-on-grade bearing on compacted fill. Buildings can be supported on shallow footings bearing on future compacted fill.
- Site preparation for well structures will require over-excavation on the order of 2 feet from existing grade for support of concrete pads. The remedial grading should extend at least 2 feet beyond the well foundation slab.
- Site preparation for proposed storage reservoir tank and booster pump/utility building will require over-excavation and placement of compacted fill for support of concrete pads and foundations. Over-excavation for reservoir should be at least 8 feet below existing grade, or to the depth of fill, whichever is deeper. Over-excavation for building should be at least 12 feet below existing grade, or to the depth of fill, whichever is deeper.
- It is expected that the near-surface site soils can be excavated with conventional heavy-duty earth-moving equipment in good working condition. Shoring or sloped excavations should be anticipated for excavations deeper than approximately 5 feet. Excavated site soils free of organic matter and demolition debris are considered

suitable for placement as compacted fill after proper processing. Such processing may include moisture conditioning and mixing, and removal/screening of oversized debris.

Results of our study indicate that the areas of planned site improvements are suitable for the proposed development from a geotechnical standpoint, provided that the recommendations contained in this report (including over-excavation) are incorporated into the design and construction of the various projects discussed herein.

TABLE OF CONTENTS

1.0 INTRODUCTION 1

2.0 PROJECT AND SITE DESCRIPTIONS 1

3.0 SITE COORDINATES 2

4.0 SCOPE OF WORK 3

4.1 TASK I: PROJECT SET-UP 3
4.2 TASK II: FIELD INVESTIGATION 3
4.3 TASK III: LABORATORY TESTING 4
4.4 TASK IV: GEOTECHNICAL EVALUATION AND REPORT PREPARATION 4

5.0 GEOLOGY AND SUBSURFACE CONDITIONS 4

5.1 REGIONAL GEOLOGIC SETTING 4
5.2 GEOLOGY AND SUBSURFACE PROFILE OF PROJECT SITE 5
5.3 GROUNDWATER 6
5.4 SUBSURFACE VARIATIONS 6

6.0 FAULTING AND SEISMIC HAZARDS 7

6.1 SEISMIC SETTING 7
6.2 SEISMIC HISTORY 10
6.3 SEISMIC HAZARDS 10
6.4 POTENTIAL EFFECTS OF SEISMIC ACTIVITY AND GEOLOGIC HAZARDS 10

7.0 SEISMIC ANALYSIS 12

7.1 CBC SEISMIC DESIGN PARAMETERS 12
7.2 DESIGN RESPONSE SPECTRA 12

8.0 LABORATORY TESTING 14

9.0 GEOTECHNICAL EVALUATION AND CONCLUSIONS 15

10.0 EARTHWORK AND SITE GRADING RECOMMENDATIONS 16

10.1 EXCAVATABILITY 16
10.2 OVER-EXCAVATION/REMOVAL 16
10.3 STRUCTURAL FILL 17
10.4 SUBTERRANEAN STRUCTURE WALL BACKFILL 18
10.5 PIPE BACKFILL RECOMMENDATIONS 18
10.6 EXPANSIVE SOIL MITIGATION 20
10.7 SHRINKAGE AND SUBSIDENCE 21
10.8 SITE DRAINAGE 21

11.0 DESIGN RECOMMENDATIONS 22

11.1 SHALLOW FOUNDATION DESIGN 22
11.2 SLABS-ON-GRADE 23

11.3 MODULUS OF SUBGRADE REACTION 23
11.4 RETAINING WALL DESIGN 24
11.5 STRUCTURAL PAVEMENT RECOMMENDATIONS 25
11.6 SOIL CORROSIVITY EVALUATION 25
11.7 SITE DRAINAGE 26
11.8 SOIL PARAMETERS FOR PIPE DESIGN 27
11.9 BEARING PRESSURE FOR ANCHOR AND THRUST BLOCKS 27
11.10 MODULUS OF SOIL REACTION (E') 28

12.0 CONSTRUCTION RECOMMENDATIONS 28

12.1 GENERAL 28
12.2 TEMPORARY EXCAVATIONS 28
12.3 SPECIAL CONSIDERATION FOR EXCAVATION ADJACENT TO EXISTING STRUCTURES 29
12.4 TEMPORARY SHORING 30
12.5 TRENCHLESS CONSTRUCTION 31
12.6 GEOTECHNICAL SERVICES DURING CONSTRUCTION 32

13.0 CLOSURE 33

14.0 REFERENCES 34

Tables

Page No.

Table No. 1, *Summary of North Torrance Wellfield Project* 2
Table No. 2, *Summary of Soil Profile and Boring Locations* 5
Table No. 3, *Summary of Regional Faults* 8
Table No. 4, *CBC Seismic Parameters* 12
Table No. 5, *Site-Specific Design Response Spectra Data* 13
Table No. 6, *Site-Specific Design Parameters* 14
Table No. 7, *Earth Pressures for Retaining Wall Design* 24
Table No. 8, *Flexible Pavement Structural Sections* 25
Table No. 9, *Corrosivity Test Results* 26
Table No. 10, *Modulus of Soil Reaction* 28
Table No. 11, *Slope Ratios For Temporary Excavation* 29

Drawings

Following Page No.

Drawing No. 1, *Site Location Map*…… 1
Drawing No. 2a thru 2e, *Site Plan and Boring Location*…… 1
Drawing No. 3, *Regional Geologic Map*…… 5
Drawing No. 4, *Southern California Regional Fault Map*…… 6
Drawing No. 5, *Site-Specific Design Response Spectra*…… 13

Appendices

Appendix A……*Field Exploration*
Appendix B ……*Laboratory Testing Program*
Appendix C……*Earthwork Specifications*

1.0 INTRODUCTION

This report contains the findings and recommendations of our geotechnical study performed for the proposed North Torrance Wellfield Project located in Torrance, California, as illustrated on Drawing No. 1, *Site Location Map*.

The purpose of this Geotechnical Study Report is to provide the results of our background review, subsurface exploration, laboratory testing, and geotechnical analyses, and to present geologic and geotechnical design parameters for use by the project design team.

This report is written for the major project elements described herein, illustrated on Drawing Nos. 2a through 2e, *Approximate Location of Borings,* and listed on Table No. 1, *Summary of North Torrance Wellfield Project*.

The findings and recommendations of this Geotechnical Study Report are intended for use solely by AECOM and the project design team. This report should not be used as a bidding document but may be made available to the potential contractors for information on factual data only. For bidding purposes, the contractors should be responsible for making their own interpretation of the data contained in this report.

2.0 PROJECT AND SITE DESCRIPTIONS

The main area of the proposed North Torrance Wellfield Project is located on a triangular shaped, 1.5 acre parcel of undeveloped land located adjacent to and west of Yukon Elementary School. The parcel is bound by to the north by a Southern California Edison (SCE) transmission line easement and to the southwest and south by a Caltrans right-of-way for Interstate 405. Existing site topography is relatively flat.

A summary of the various elements of the planned North Torrance Wellfield Project are listed on the following table:

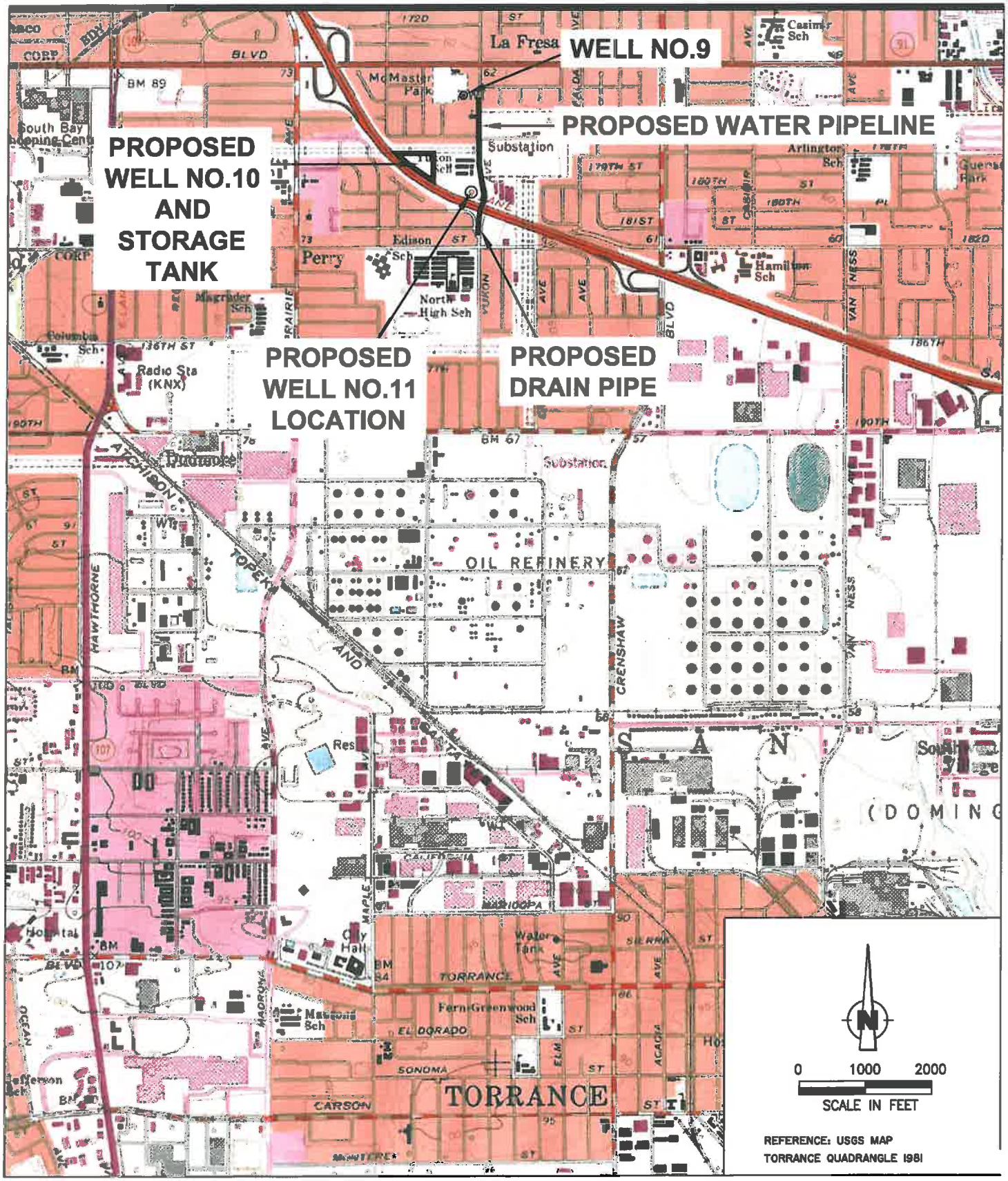

SITE LOCATION MAP

NORTH TORRANCE WELLFIELD PROJECT
TORRANCE, CALIFORNIA

Project No.

10-31-228-01

Drawing No.

1

Converse Consultants

LEGEND

APPROXIMATE LOCATION OF BORING

0 1200 2400

APPROXIMATE SCALE IN FEET

SITE PLAN AND BORING LOCATION

Converse Consultants

NORTH TORRANCE WELLFIELD PROJECT
TORRANCE, CALIFORNIA

Project No. 10-31-228-01

Drawing No. 2a

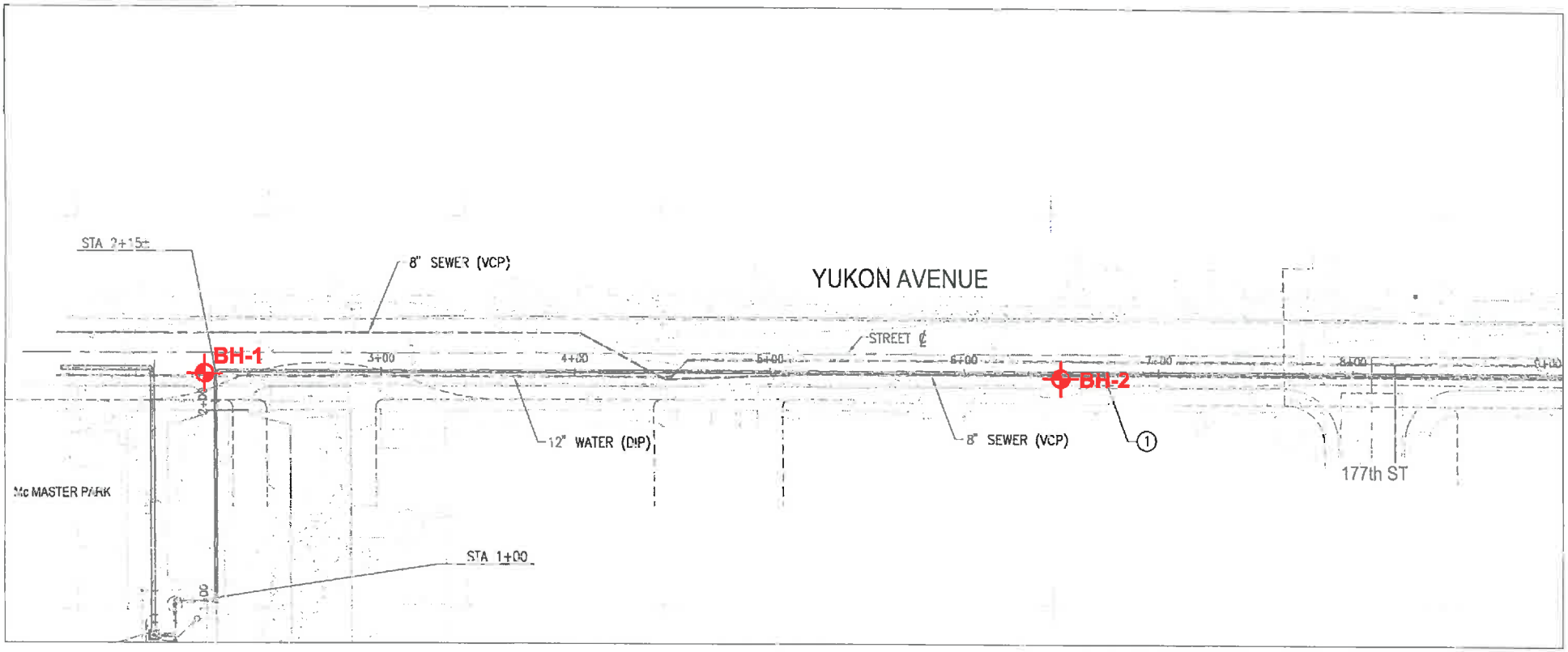

LEGEND

APPROXIMATE LOCATION OF BORING

0 80 160

APPROXIMATE SCALE IN FEET

SITE PLAN AND BORING LOCATION

Converse Consultants

NORTH TORRANCE WELLFIELD PROJECT
TORRANCE, CALIFORNIA

Project No. 10-31-228-01

Drawing No. 2b

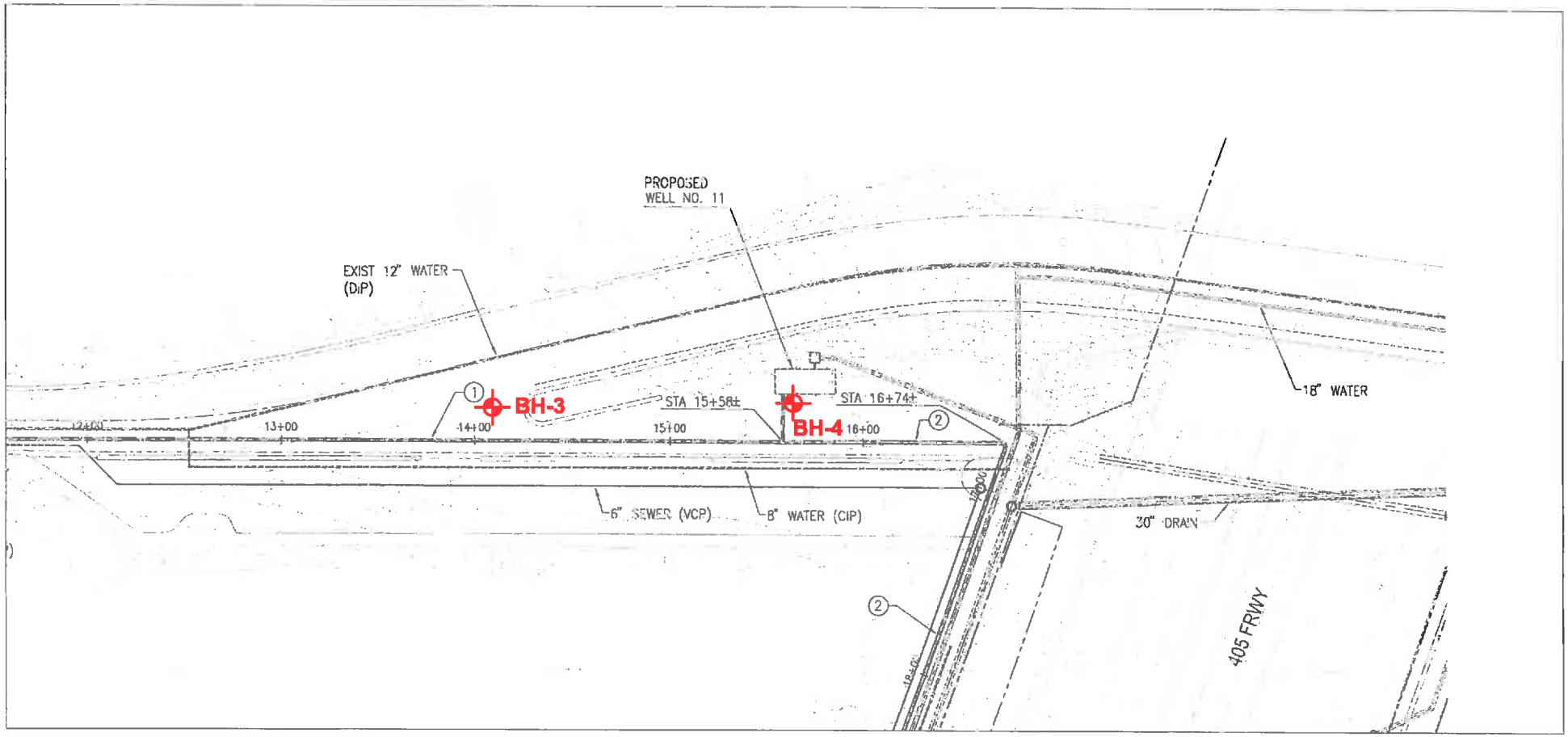

LEGEND

APPROXIMATE LOCATION OF BORING

0 80 160

APPROXIMATE SCALE IN FEET

SITE PLAN AND BORING LOCATION

Converse Consultants

NORTH TORRANCE WELLFIELD PROJECT
TORRANCE, CALIFORNIA

Project No. 10-31-228-01

Drawing No. 2c

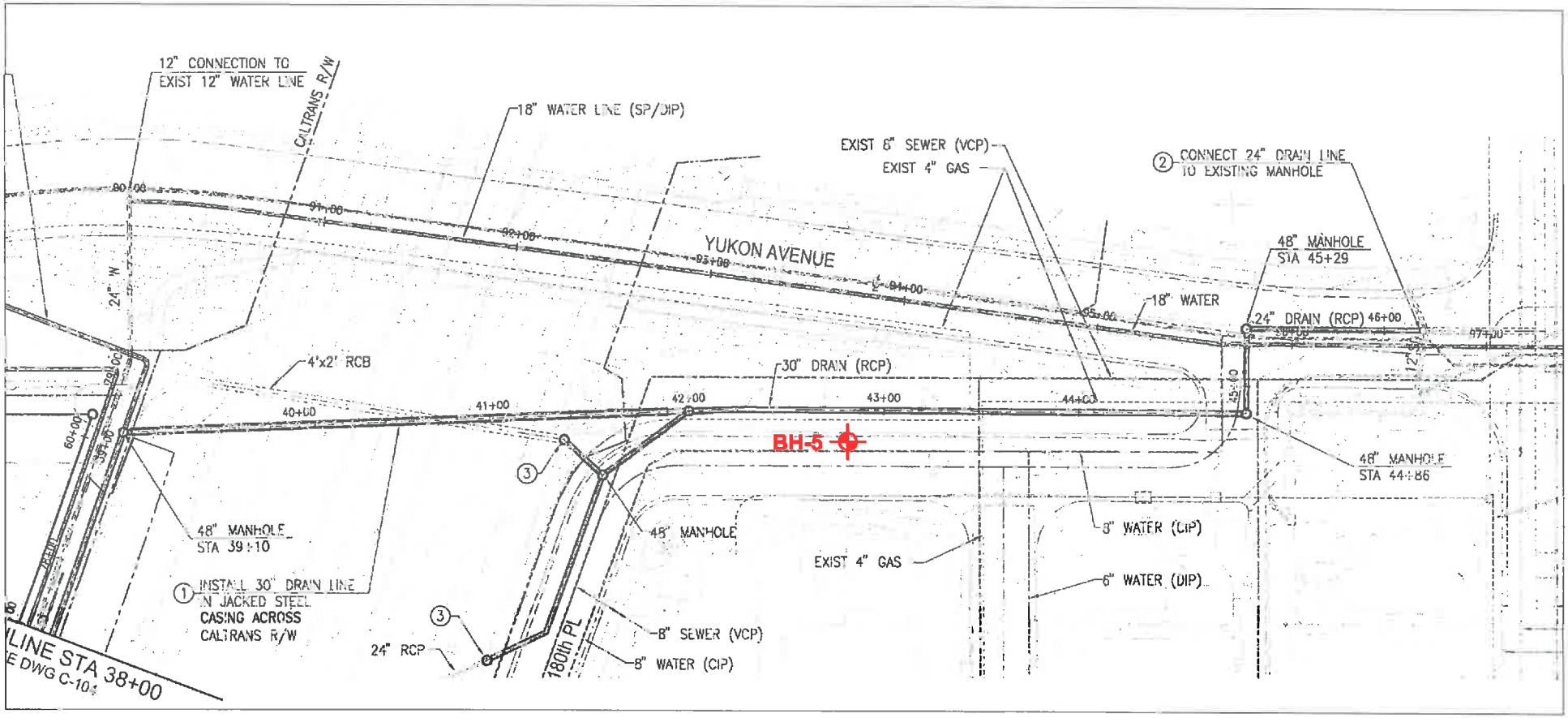

LEGEND

APPROXIMATE LOCATION OF BORING

0 80 160

APPROXIMATE SCALE IN FEET

SITE PLAN AND BORING LOCATION

Converse Consultants

NORTH TORRANCE WELLFIELD PROJECT
TORRANCE, CALIFORNIA

Project No. 10-31-228-01

Drawing No. 2d

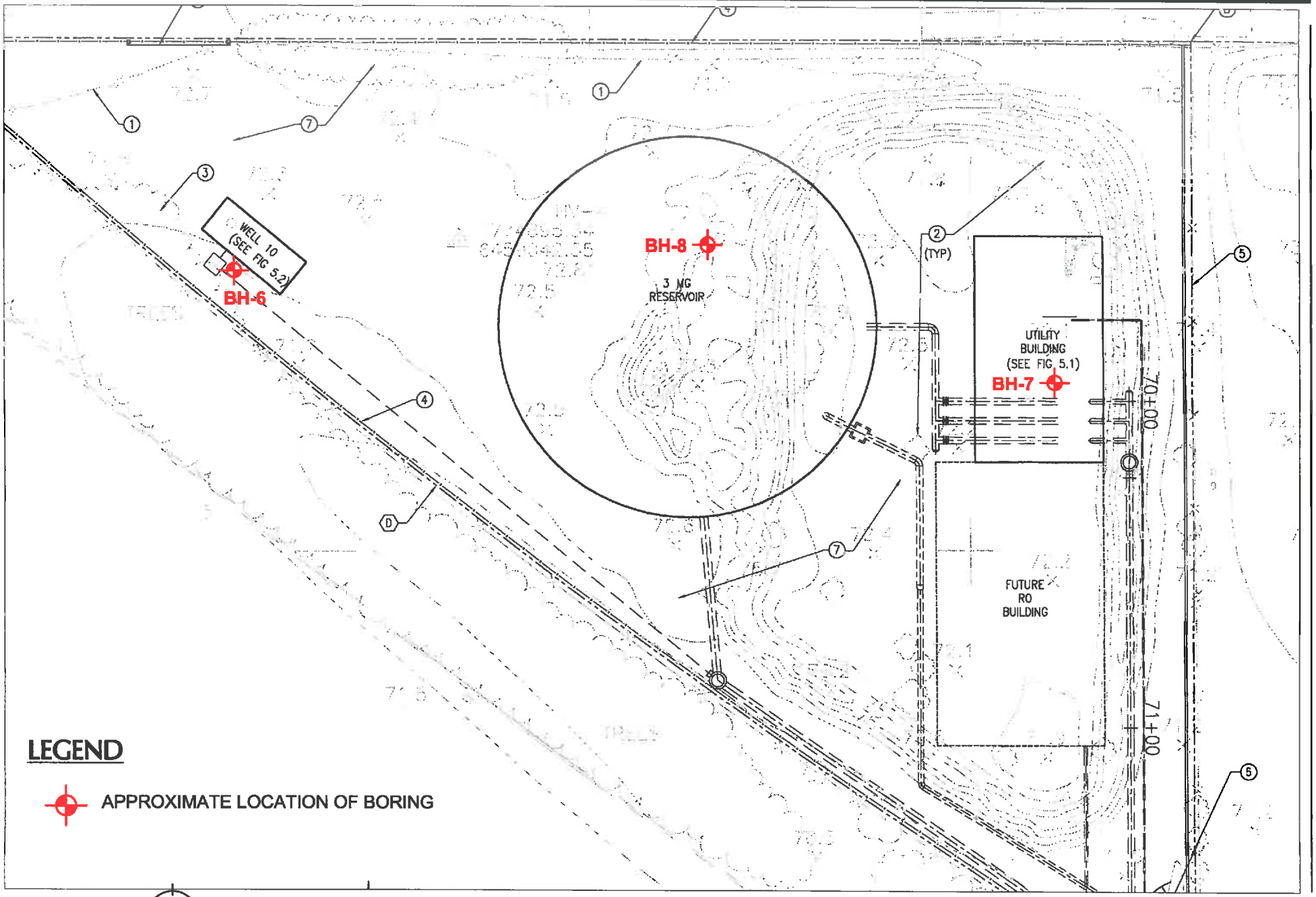

0 80 160

APPROXIMATE SCALE IN FEET

SITE PLAN AND BORING LOCATION

Converse Consultants

NORTH TORRANCE WELLFIELD PROJECT
TORRANCE, CALIFORNIA

Project No. 10-31-228-01

Drawing No. 2e

Table No. 1, Summary of North Torrance Wellfield Project

Project Component	Component Location	Site Description
Well No. 10	1.5 acre parcel west of Yukon Elementary School	Relatively flat vacant parcel
Booster Pump Station/ Utility Building	1.5 acre parcel west of Yukon Elementary School	Relatively flat vacant parcel
Three-million-gallon storage tank	1.5 acre parcel west of Yukon Elementary School	Relatively flat vacant parcel
Well No. 11	Approx. 40-foot-wide strip of land located southeast of Yukon Elementary School	Approx. 40-foot-wide level grass area situated at the top of a 3- to 8-foot-high descending slope
New water pipelines to connect existing Well No. 9 at McMaster Park and planned Well No. 11 with the proposed storage tank site	Alignment planned from the southeast corner of McMaster Park (Well No. 9 location) southward toward area of planned Well No. 11, then extending westerly toward .5 acre parcel west of Yukon Elementary School	Relatively level roadway (Yukon Avenue) and relatively flat vacant parcel
New drain pipeline	Extending southward from the southeast end of the easement for the proposed storage tank, to the existing storm drain system located on Yukon Avenue at W. 182nd Street.	Extending below the Caltrans Right-of-Way (Interstate 405) to the residential neighborhood located along the west side of Yukon Avenue, north of W. 182nd Street.

3.0 SITE COORDINATES

The coordinates representative of the three-million gallon storage tank were used to calculate earthquake ground motions with the United States Geological Survey computer program, *Seismic Hazards Curves, Response Parameters and Design Parameters, Version 5.0.9a.* These coordinates are north latitude 33.8689 degrees, west longitude 118.3378 degrees. Earthquake ground motions calculated from these coordinates are considered representative for all components of the planned North Torrance Wellfield Project.

4.0 SCOPE OF WORK

Our scope of work has consisted of the following tasks:

4.1 Task I: Project Set-up

Converse obtained an excavation permit from the City of Torrance Community Development Department prior to initiating the subsurface exploration. Coordination and preparation of traffic control plans were also performed by Converse as a part of the permit acquisition.

After obtaining the City permit, a Converse representative visited the site to mark the boring locations for utility clearance. Eight (8) boring locations (BH-1 through BH-8) were marked within the proposed project areas. Underground Service Alert of Southern California (USA) was notified of our proposed drilling locations 48 hours prior to initiation of the subsurface field work.

4.2 Task II: Field Investigation

Subsurface exploration and soil sampling was performed to evaluate the soil conditions in the areas of planned North Torrance Wellfield Project improvements. The number and locations of the borings were based in part on the Request for Proposal (RFP) to Provide Preliminary Design Services for the North Torrance Wellfield Project issued by the City of Torrance on April 28, 2010. The planned project has been modified since issuance of the RFP, therefore number and locations of the exploratory borings outlined in our May 17, 2010 proposal were also modified to better serve the needs of the project.

Our field exploration consisted of drilling, logging, and sampling eight (8) hollow-stem auger borings (BH-1 through BH-8) on July 7 and 8, 2011. The borings were drilled using truck mounted drilling equipment to depths of 16.5 to 31.5 feet below the existing ground surface (bgs). The boring locations are shown on Drawing Nos. 2a through 2e, *Approximate Location of Borings*.

The borings were visually logged by our staff and sampled at regular intervals and at changes in subsurface soils conditions. California Modified Sampler (Ring samples), Standard Penetration Test samples, and bulk soil samples were obtained for laboratory testing. The borings were backfilled with soil cuttings and 1-sack slurry cement following the completion of drilling. Paved surface areas were patched with asphalt concrete.

4.3 Task III: Laboratory Testing

Representative samples of the site soils were tested in our laboratory and the laboratory of Environmental Geotechnology Laboratory, Inc. of Arcadia to aid in the classification and to evaluate relevant engineering properties. The tests performed included:

- *In situ* moisture contents and dry densities (ASTM Standard D2216)
- Grain Size Distribution (ASTM Standard C136)
- Maximum Dry Density and Optimum-Moisture Content (ASTM Standard D1557)
- Direct Shear (ASTM Standard D3080)
- Consolidation and Collapse (ASTM Standard D2435)
- Expansion Index (ASTM Standard D4829)
- Soil Corrosivity (Caltrans 643, 422, 417, and 532)
- R-Value (Cal Standard Method 301-G)

For a description of the laboratory test methods and test results, see Appendix B, *Laboratory Testing Program*. For *in-situ* moisture and dry densities, see the Logs of Borings in Appendix A, *Field Exploration*.

4.4 Task IV: Geotechnical Evaluation and Report Preparation

Our geotechnical and engineering analyses included interpretation of the field data and laboratory data, consideration of the background data, and formulation of appropriate seismic coefficients for the site location. This data was integrated into our analysis for lateral earth pressures, shoring parameters and foundation design parameters.

Data obtained from the background review, exploratory borings, and laboratory testing program were analyzed and evaluated. This report was prepared to provide the findings, conclusions and recommendations developed during our study and evaluation.

5.0 GEOLOGY AND SUBSURFACE CONDITIONS

5.1 Regional Geologic Setting

The regional geologic setting consists of a broad sediment filled basin, known as the Los Angeles Basin, located at the convergence of the Transverse Ranges and Peninsular Ranges geomorphic provinces of California. The project site is located within the coastal portion of the Los Angeles Basin, locally referred to as the Torrance Plain. Sedimentary deposits within the Torrance Plain consist of older alluvial soils overlain to the west by older sandy sediments deposited in an eolian environment (dune sand), as mapped and described in the Seismic Hazard Zone Report for the Torrance Quadrangle (CDMG, 1998).

Drawing No. 3, *Regional Geologic Map*, based on the Geologic Map of the Long Beach 30' x 60' Quadrangle (CGS, 2003), has been prepared to show the location of the North Torrance Wellfield Project with respect to the regional geology.

5.2 Geology and Subsurface Profile of Project Site

Undocumented fill soils ranging in depth from 2 to 11.5 feet were encountered in the borings drilled within the project areas. The fill consists of primarily clay soils, underlain by older alluvial soils. Native older alluvium generally consists of clay soils. Sampling blow counts for both fill and native soils correlate with firm to stiff conditions.

Logs of the subsurface conditions as encountered in the test borings and pump/observation wells were recorded at the time of drilling and are presented on the boring logs included in Appendix A, *Field Exploration*, along with our field exploration and soil sampling procedures. The following table summarizes the subsurface information gathered along the project alignment:

Table No. 2, Summary of Soil Profile at Boring Locations

Boring Locations / (Project Component)	Geologic Profile	Descriptions
BH-1, BH-2 and BH-3 (New pipelines to connect existing Well No. 9 and planned Well No. 11 with the proposed storage tank site)	**Fill:** encountered up to 6.5 feet below road surface at BH-2 and BH-3	Clay with Sand (CL)
	Older Alluvium: below the roadway pavement at BH-1 and below the fill at BH-2 and BH-3, to the maximum depth explored of 16.5 feet	Clay (CL), Clay with Sand (CL) and Clayey Silt (ML)
BH-4 (Well No. 11)	**Fill**: encountered up to 2 feet below the ground surface	Sandy Clay (CL)
	Older Alluvium: below the fill, to the maximum depth explored of 16.5 feet	Clay (CL)

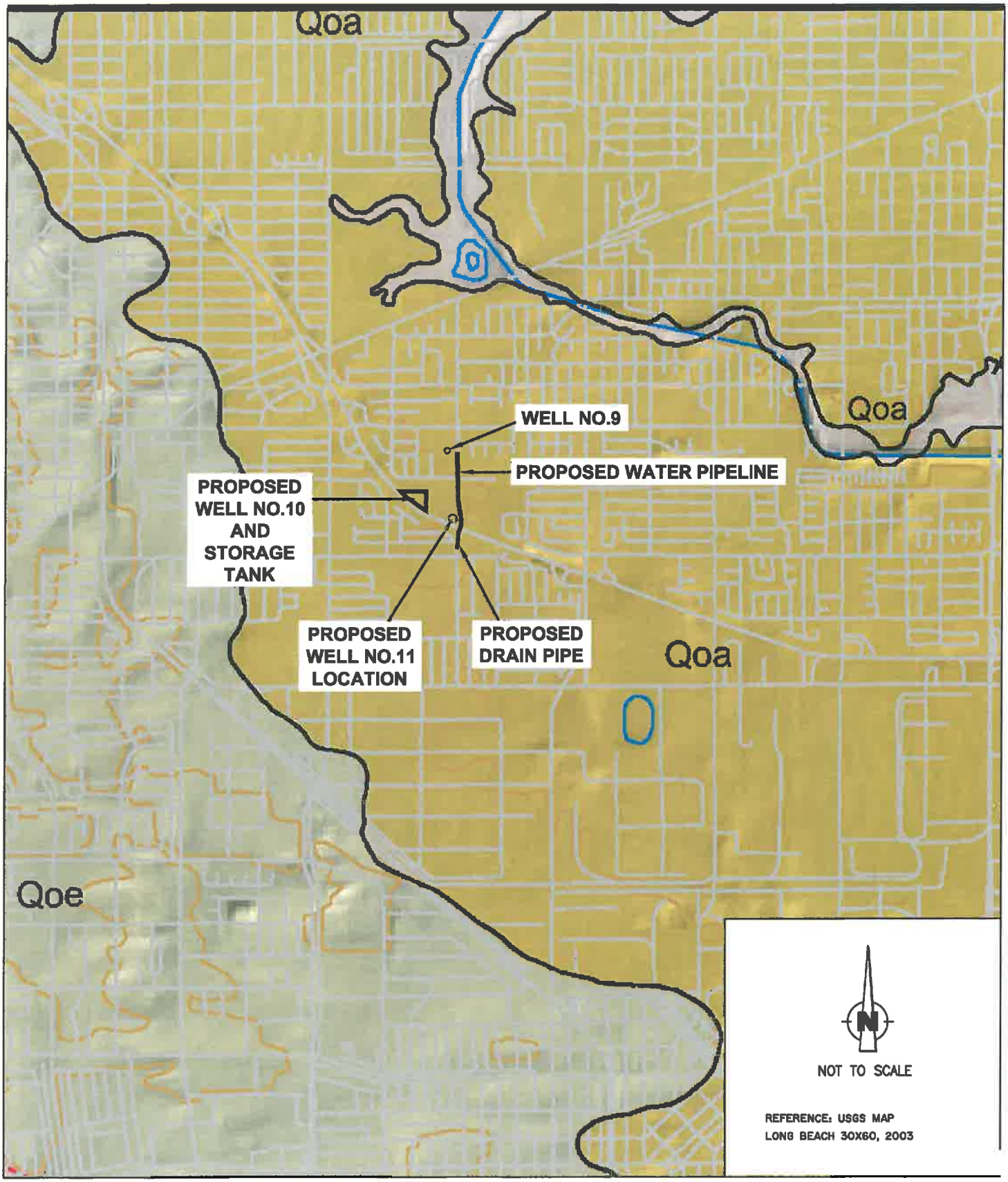

REGIONAL GEOLOGIC MAP

NORTH TORRANCE WELLFIELD PROJECT
TORRANCE, CALIFORNIA

Project No.
10-31-228-01

Drawing No.
3

Converse Consultants

BH-5 (New drain pipeline)	**Fill:** encountered up to 3 feet below road surface	Clay with Sand (CL)
	Older Alluvium: below the fill, to the maximum depth explored of 16.5 feet	Clay (CL), Clay with Sand (CL) and Clayey Silt with Sand (ML)
BH-6 (Well No. 10)	**Fill**: encountered up to 2 feet below the ground surface	Sandy Clay (CL)
	Older Alluvium: below the fill, to the maximum depth explored of 31.5 feet	Clay (CL) to a depth of 25 feet, Silty Sand (SM) below 25 feet
BH-7 and BH-8 (Three-million-gallon storage tank, and Booster Pump Station/ Utility building)	**Fill:** encountered up to 11.5 feet deep at BH-7 and 6.5 feet deep at BH-8	Silty Sand (SM), Clay (CL) and Sandy Clay (CL)
	Older Alluvium: below the fill at BH-7 and BH-8, to the maximum depth explored of 31.5 feet	Clay (CL) to depths of 20- 25 feet, Sandy to Clayey Silt (ML) below 20 - 25 feet

5.3 Groundwater

Review of readily available water well data from the Los Angeles County Department of Public Works – Ground Water Wells Website (http://gis.dpw.lacounty.gov/wells) indicates groundwater levels at depths of 75 feet or deeper from the ground surface since 1949. Groundwater was not encountered in the borings drilled to the maximum depth explored of 31.5 feet bgs. In general, groundwater levels fluctuate with the seasons and local zones of perched groundwater may be present due to local conditions or during rainy seasons. Groundwater conditions below any given site vary depending on numerous factors including seasonal rainfall, local irrigation, and groundwater pumping, among other factors. Based on our review of available groundwater data, groundwater is not anticipated to be encountered during the planned construction.

5.4 Subsurface Variations

Based on results of the subsurface exploration and our experience, variations in the continuity and nature of subsurface conditions within the project site should be anticipated, especially for the undocumented fill soils. Because of the uncertainties involved in the nature and depositional characteristics of the earth material at the site, care should be exercised in interpolating or extrapolating subsurface conditions between or beyond the boring locations. If, during construction, subsurface conditions

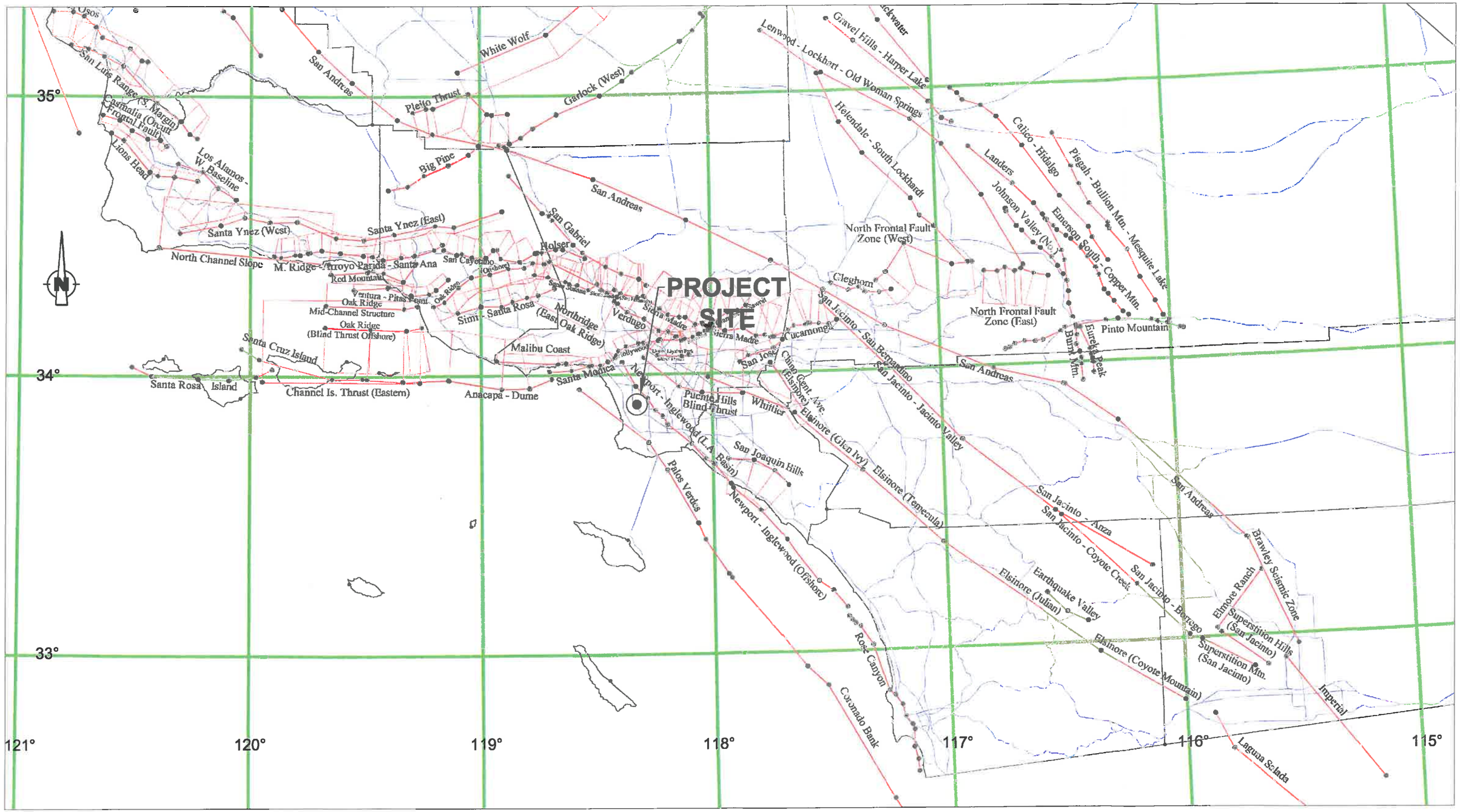

REFERENCE: PORTION OF CGS 2002 CALIFORNIA FAULT MODEL MODIFIED FOR USE WITH FRISKSP AND EQFAULT BY THOMAS F. BLAKE, AUGUST 2004

FAULT SOURCES

BLIND THRUST FAULT, POLYGONS INDICATE RUPTURE PLANES AND DIP DIRECTION

SOUTHERN CALIFORNIA REGIONAL FAULT MAP

Converse Consultants

NORTH TORRANCE WELLFIELD PROJECT
TORRANCE, CALIFORNIA

Project No.	Drawing No.
10-31-228-01	4

differ significantly from those presented in this report, this office should be notified immediately so that recommendations can be modified, if necessary.

6.0 FAULTING AND SEISMIC HAZARDS

6.1 Seismic Setting

The subject site is situated within a seismically active region. As is the case for most areas of Southern California, ground-shaking resulting from earthquakes associated with nearby and more distant faults may occur at the project site. During the life of the project, seismic activity associated with active faults can be expected to generate moderate to strong ground shaking at the site.

There are a number of nearby fault systems which could produce ground shaking at the site during a major earthquake. The approximate locations of regional capable faults with respect to the project site are shown (excluding blind thrust faults) on Drawing No. 4, *Southern California Regional Fault Map.* Table No. 3, *Summary of Regional Faults,* summarizes selected data of known faults capable of seismic activity within 40 kilometers of the site. The data presented on Table No. 3, *Summary of Regional Faults*, was calculated using UBCSEIS Version 1.03 and EQFAULT Version 3.0 with updated fault data from *"The Revised 2002 California Probabilistic Seismic Hazard Maps (Cao et al., 2003)"*, Appendix A, and other published geologic data.

Table No. 3, Summary of Regional Faults

Fault Name and Section	Approximate * Distance to Site (kilometers)	Max. Moment Magnitude (Mmax)	Slip Rate (mm/yr)
Palos Verdes	5.3	7.3	3.00
Newport-Inglewood (L.A. Basin)	7.7	7.1	1.00
Puente Hills Blind Thrust**	20.0	7.1	0.70
Santa Monica	23.8	6.6	1.00
Hollywood	24.6	6.4	1.00
Malibu Coast	25.4	6.7	0.30
Raymond	30.1	6.5	1.50
Elsinore-Whittier	32.3	6.8	2.50
Verdugo/Eagle Rock	33.4	6.9	0.50
Anacapa-Dume	35.4	7.5	3.00
Sierra Madre (Central)	40.6	7.2	2.00

***** Distance from the site (1.5 acre parcel) to the surface projection as computed by the computer program UBCSEIS, and per review of published geologic data and mapping.
** Distance from the site to nearest subsurface projection, per data in Appendix A of the 2002 California Fault Parameters Report (Cao et al.,2003).

The project site is not located within a currently designated State of California Earthquake Fault Zone (Alquist-Priolo Special Studies Zones) for surface fault rupture. No surface faults are known to project through or towards the site. The closest known faults to the project site with mappable surface expressions are the Palos Verdes fault located approximately 5.3 kilometers to the south and the onshore segments of the Newport Inglewood Fault, located approximately 7.7 kilometers to the east.

Palos Verdes Fault

The mapped trace of the Palos Verdes Fault is located about 5 kilometers south of the project site along the northern margin of the Palos Verdes Hills. The major component of uplift and tectonic deformation of the Palos Verdes Peninsula is attributed to movement along this fault. The Palos Verdes Fault is considered capable of producing a maximum moment magnitude (Mw) 7.3 earthquake.

Newport Inglewood Fault

The Newport Inglewood fault zone is located approximately 8 kilometers east of the project site. The Newport Inglewood fault system is about 66 km long on shore and extends

northwest from Huntington Beach through Long Beach to Culver City and the Cheviot Hills. The Newport Inglewood fault continues offshore to the southeast of Huntington Beach and makes landfall in La Jolla as the Rose Canyon fault. The Newport Inglewood fault is characterized by a series of uplifts and anticlines including Newport Mesa, Huntington Beach Mesa, Bolsa Chica Mesa, Alamitos Heights and Landing Hill, Signal Hill and Reservoir Hill, Dominguez Hills and Baldwin Hills.

Several earthquakes have occurred along the fault zone including the March 10, 1933 "Long Beach" earthquake of M_W 6.4, with its epicenter off Newport Beach, and smaller earthquakes at Inglewood on June 20, 1920 (M 4.9) and May 17, 2009 (M 4.7), Torrance on October 21, 1941 (M_L 4.8), Gardena on November 14, 1941 (M_L 4.8), and Newport Beach on April 7, 1989 (M_L 4.7).

The Newport Inglewood fault is considered active and capable of producing a maximum moment magnitude (M_W) 7.1 earthquake. The slip rate is approximately 1.0 mm/year but may range up to 2 to 3 mm/year along isolated segments (Cao et al., 2003).

Puente Hills Blind Thrust Fault

The potential for damage from earthquakes along a zone of north-dipping blind thrust faults in the northern Los Angeles Basin was illustrated by the M_L 5.9 Whittier earthquake event on October 1, 1987. Smaller earthquakes experienced north/northeast of downtown Los Angeles on September 3, 1905 (est. M 5.3) and July 16, 1920 (est. M 5.0) are further indications of active faulting in the area.

Blind thrust faults are low angle reverse faults which generally have no surface trace. Conventional fault finding trenches, boreholes and paleoseismic dating methods used at the surface have limited use for investigation of these deeply buried thrust fault structures. The geometry and location of the blind thrust fault structures and thrust ramps are based on interpretation of oil well data, seismic and strong motion data solutions, high resolution geophysical data, paleoseismic studies and structural model analyses (Yeats, R.S. 2004; Dolan, J.F. et al., 2003). Examples of blind thrust fault landforms include folding and uplift of areas such as the Elysian, Repetto, Montebello and Puente Hills.

The nearest subsurface projection/interpretation of the Puente Hills Blind Thrust Fault is located approximately 20 kilometers east/northeast of the project site (Shaw et al., 2002). The Puente Hills Blind Thrust has been interpreted to include three segments with a combined length of approximately 42 kilometers and a depth range of 3 km to 13 km below ground surface, ramping down toward the east/northeast (Dolan, J.F., et al., 2003). Studies of the Puente Hills Blind Thrust have indicated the occurrence of at least four large (moment-magnitude 7.2 to 7.5) earthquakes for this fault system during the past 11,000 years (Dolan, J.F. et al., 2003).

Seismic hazard fault models for the Los Angeles Basin and vicinity will continue to be refined as new information and technology develops and becomes available through time.

6.2 Seismic History

An analysis of the seismic history of the site was conducted using the computer program EQSEARCH, (Blake, 2000) from the most recent earthquake database available, and attenuation relationships proposed by Boore et al. (1997) for alluvium soil conditions. Based on the analysis of seismic history, the number of earthquakes and aftershocks with a moment magnitude of 5.0 or greater occurring within a distance of 100 kilometers was 140, since the Year 1800. Based on the analysis, the largest earthquake induced ground acceleration affecting the site since the year 1800 was approximately 0.13g, generated from the M_W 6.7 Northridge Earthquake in 1994.

6.3 Seismic Hazards

As is the case for most areas of Southern California, seismic hazards resulting from earthquakes need to be considered in the design and construction of new projects. In addition to strong ground motion, such hazards include ground rupture, slope instability and liquefaction. As previously reported, the subject site is not located within a State of California Earthquake Fault Zone (formerly Alquist-Priolo Special Studies Zones) for surface fault rupture.

The State of California Seismic Hazard Zone Map for the Torrance Quadrangle (March 25, 1999) shows that the project site is not located within an area of potential liquefaction and is not located within a mapped area of potential earthquake-induced landslides due to the relatively flat condition of the site topography.

6.4 Potential Effects of Seismic Activity and Geologic Hazards

Other effects of seismic activity (strong ground motion), besides surface fault rupture, soil liquefaction, and landslide, include lateral spreading, earthquake-induced flooding, tsunamis, and seiches. Other geologic hazards to be considered in California include volcanic eruption hazard. Site-specific potential for each of these other seismic and geologic hazards is discussed in the following sections.

Surface Fault Rupture: The site is not located within a currently designated State of California Earthquake Fault Zone. Based on a review of existing geologic information, no known active surface fault zone crosses or projects toward the site. The potential for surface rupture resulting from the movement of the nearby major faults is considered remote.

Liquefaction/Seismic Settlement: Liquefaction is defined as the phenomenon where a saturated soil mass exhibits a substantial reduction in its shear strength. This strength reduction is due to the development of excess pore pressure in a saturated soil mass caused by earthquake induced ground motions.

Groundwater was not encountered during our subsurface exploration to depths of 31.5 and review of groundwater levels since 1949 indicate the depth to groundwater is greater than 75 feet below existing ground surface. Based on firm to stiff nature of the older alluvial soils encountered at the site, and the deep groundwater level, the potential for liquefaction is very low and dynamic settlement is considered negligible.

Lateral Spreading: Seismically induced lateral spreading involves primarily lateral movement of earth materials due to ground shaking. It differs from the slope failure in that complete ground failure involving large movement does not occur due to the relatively smaller gradient of the initial ground surface. Lateral spreading is demonstrated by near-vertical cracks with predominantly horizontal movement of the soil mass involved. The topography at the project site and in the immediate vicinity of the site is relatively flat, with no nearby unsupported slopes or embankments below the site. Under these circumstances, the potential for lateral spreading at the subject site is considered negligible.

***Earthquake-Induced Flooding*:** This is flooding caused by failure of dams or other water-retaining structures as a result of earthquakes. The potential of earthquake induced flooding of the subject site is considered to be remote because of regional flood control structures.

Tsunamis: Tsunamis are tidal waves generated by fault displacement or major ground movement. Based on the surface elevation and location of the site from the ocean (approximately 3.75 miles west of the site), tsunamis do not pose a hazard.

Seiches: Seiches are large waves generated in enclosed bodies of water in response to ground shaking. Based on site location, away from lakes and reservoirs, seiches do not pose a hazard.

Volcanic Eruption Hazard: Volcanic eruption hazards are not present at the site or nearby. According to Jennings (1994), the nearest Holocene-epoch volcanic eruption area is the Amboy Crater area located in the Mojave Desert approximately 130 miles east/northeast of the site.

7.0 SEISMIC ANALYSIS

7.1 CBC Seismic Design Parameters

Seismic parameters based on the 2010 California Building Code, calculated with the United States Geological Survey computer program *Seismic Hazards Curves, Response Parameters and Design Parameters, Version 5.1.0.,* and the site coordinates 33.8689 degrees North Latitude, 118.3378 degrees West Longitude are provided on the following table:

Table No. 4, CBC Seismic Parameters

Seismic Parameters	
Site Class	D
Mapped Short period (0.2-sec) Spectral Response Acceleration, S_S	1.508g
Mapped 1-second Spectral Response Acceleration, S_1	0.605g
Site Coefficient, F_a	1.0
Site Coefficient, F_v	1.5
MCE 0.2-sec period Spectral Response Acceleration, S_{MS}	1.508g
MCE 1-second period Spectral Response Acceleration, S_{M1}	0.907g
Design Spectral Response Acceleration for short period, S_{DS}	1.005g
Design Spectral Response Acceleration for 1-second period, S_{D1}	0.605g

7.2 Design Response Spectra

A site-specific response spectra was developed for the project for a Maximum Considered Earthquake (MCE) ground motion, defined as a horizontal peak ground acceleration that has a 2 percent probability of being exceeded in 50 years (return period of approximately 2,475 years).

In accordance with ASCE 7-05, Section 21.2 and Code Application Notice (CAN 2-1802A.6.2) the site-specific response spectra can be taken as the lesser of the probabilistic maximum rotated component of MCE ground motion and the 84th percentile of deterministic maximum rotated component of MCE ground motion response spectra. The design response spectra can be taken as $^2/_3$ of the site-specific MCE response spectra, but should not be lower than 80 percent of CBC general response spectra.

A site specific response analysis, using available fault data within 100 kilometers of the site, was developed using the computer program EZ-FRISK by Risk Engineering (v. 7.62) and the 2008 USGS Statewide Fault Model. Attenuation relationships proposed by Boore and Atkinson (2008), Campbell and Bozorgnia (2008), Chiou and Youngs (2008) were used in the analysis. These attenuation relationships are based on Next

Generation Attenuation (NGA) project model. An average shear wave velocity for the upper 30 meters of soil profile (V_{s30}) of 270 meters per second was used, based upon our site-specific exploration. Shear wave velocities of 1,000 meters per second at 150 meters below grade, and 2,500 meters per second at 3,000 meters below grade were also selected for our EZ-Frisk Analysis. Maximum rotated components were determined using Huang (2008) method.

Applicable response spectra data are presented in a Table below and on Drawing No. 5, *Site-Specific Design Response Spectra.* These curves correspond to response values obtained from above attenuation relations for horizontal elastic single-degree-of-freedom systems with equivalent viscous damping of 5 percent of critical damping.

Table No. 5, Site-Specific Design Response Spectra Data

Period (sec)	Maximum Rotated Probabilistic MCE Spectra, (g)	84th Percentile of Maximum Rotated Deterministic MCE Response Spectra, (g)	Deterministic CBC Lower Level, (g)	Site Specific MCE, (g)	Design Response Spectra, (5% of Damping) (g)	General Response Spectra Lower Limit, (g)
0.03	0.786	0.881	1.50	0.786	**0.524**	0.442
0.05	0.891	0.979	1.50	0.891	**0.594**	0.522
0.10	1.232	1.289	1.50	1.232	**0.821**	0.723
0.20	1.579	1.668	1.50	1.579	**1.053**	0.804
0.30	1.734	1.800	1.50	1.734	**1.156**	0.804
0.40	1.641	1.805	1.50	1.641	**1.094**	0.804
0.50	1.550	1.755	1.50	1.550	**1.033**	0.804
0.75	1.278	1.511	1.50	1.278	**0.852**	0.645
1.00	1.052	1.224	0.90	1.052	**0.701**	0.484
2.00	0.620	0.965	0.45	0.620	**0.413**	0.242
3.00	0.433	0.832	0.30	0.433	**0.288**	0.161
4.00	0.335	0.733	0.23	0.335	**0.223**	0.121

Vertical acceleration at the site may be calculated in accordance with ASCE 7-05, Section 12.4.

The site-specific design response parameters are provided in the following table. These parameters were determined from Design Response Spectra presented in the table above, and following guidelines of ASCE Section 21.4.

SITE-SPECIFIC RESPONSE SPECTRA
2% Probability of Exceedance in 50 Years, 5% of Damping

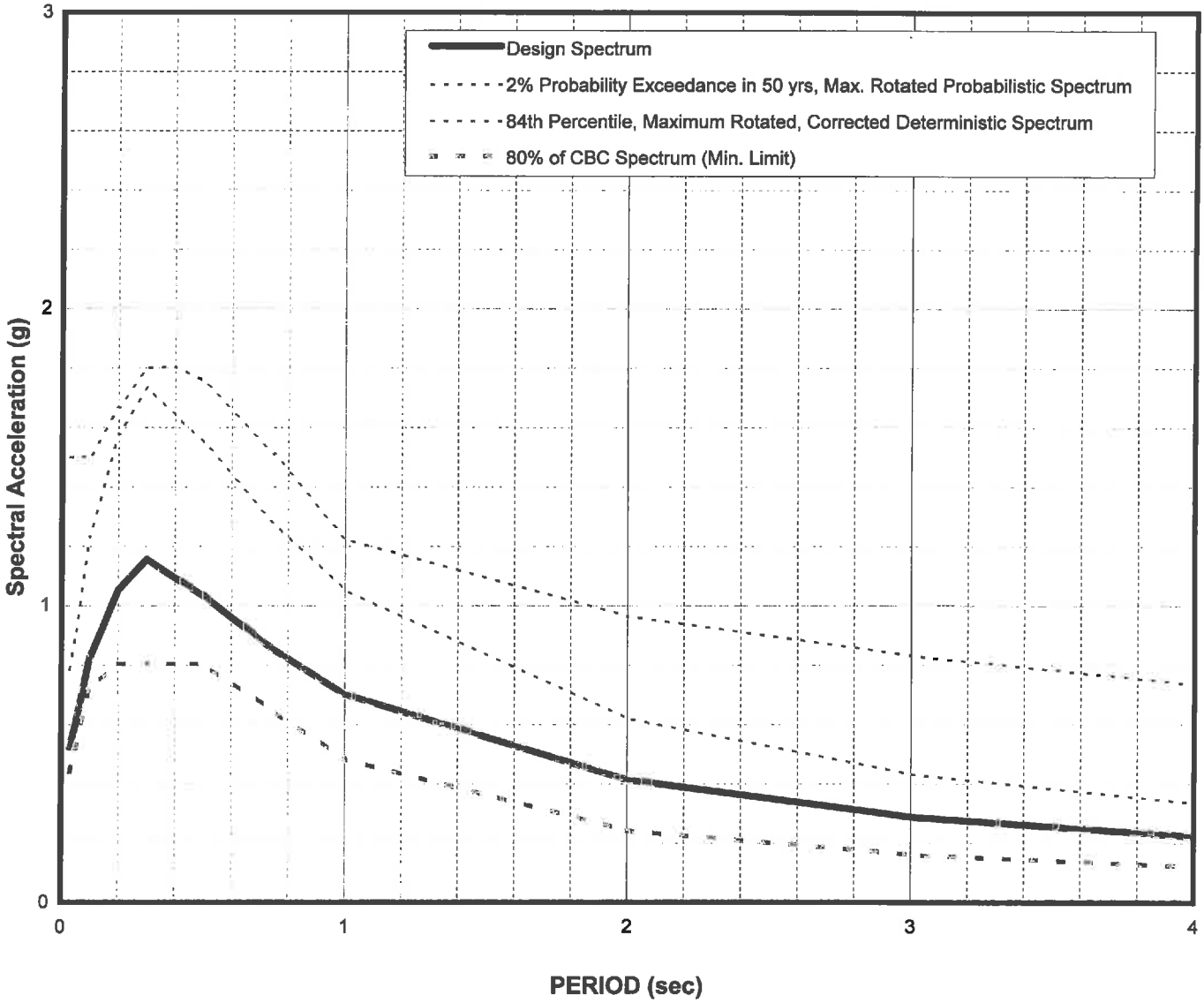

Note: Calculated using EZFRISK program Risk Engineering, version 7.62
and USGS 2008 fault model database.

SITE-SPECIFIC RESPONSE SPECTRA

North Torrance Wellfield Project

Project Number:

10-31-228-01

For : AECOM & City of Torrance

Converse Consultants

Drawing No.

5

Table No. 6, Site-Specific Seismic Design Parameters

	Design Parameters (5% Damping)	Lower Limit, 80% of CBC Design Spectra
Site Specific 0.2-sec period Spectral Response Acceleration, S_{MS}	1.579	1.206
Site Specific1-second period Spectral Response Acceleration, S_{M1}	1.240	0.726
Site Specific Design Spectral Response Acceleration for short period S_{DS}	1.053	0.804
Site Specific Design Spectral Response Acceleration for 1-second period, S_{D1}	0.827	0.484

8.0 LABORATORY TESTING

Representative samples of the site soils were tested in our laboratory and the laboratory of Environmental Geotechnology Laboratory, Inc. of Arcadia to aid in the classification and to evaluate relevant engineering properties. Results of the various laboratory tests are summarized discussed below. For a more detailed description of the laboratory test methods and test results, see Appendix B, *Laboratory Testing Program*.

- *In-situ* Moisture and Dry Density: Results of *in-situ* moisture and dry density tests are presented on the Log of Borings in Appendix A, *Field Exploration.*
- Grain Size Analysis: Three (3) representative samples were tested to evaluate the relative grain size distribution of clay samples with sand. Results are presented in Appendix B, *Laboratory Testing Program*, and indicate the samples tested are predominately clay with 6 to 16 percent sand.
- Maximum Dry Density and Optimum Moisture Content: The moisture-density relationship of two (2) representative soil samples is presented in Appendix B, *Laboratory Testing Program*. The test results indicate that the laboratory maximum dry density for representative samples of the upper five feet of soil range from 111.2 pounds per cubic foot (pcf) to 117.4 pcf at 15.2 and 14.4 percent moisture content, respectively.
- Direct Shear: Two (2) direct shear test was performed on representative sample in-situ samples, and one (1) direct shear test was performed on a sample remolded to 90 percent relative compaction. Result of the direct shear tests is presented in Appendix B, *Laboratory Testing Program*.
- Consolidation Test: Five (5) consolidation tests were performed on representative samples of the soils encountered within the areas of the planned storage tank, water wells and Booster Pump Station/Utility building. The results of the test are presented

in Appendix B, *Laboratory Testing Program.* Based on the results of these tests, the compressibility of the site native soils is considered moderate.

- Expansion Index: Two (2) representative samples of the site soils (one sand and one clay) were tested to evaluate Expansion Index (EI). Test results are included in Appendix B, *Laboratory Testing Program*. The test results indicate that the native clay site soils have a medium expansion potential (EI 51 to 90) and the sandy fill soils in the vicinity of BH-7 have a very low expansion potential (EI 0 to 20).
- Soil Corrosivity: Two (2) representative samples of the site soils were tested to evaluate soil corrosivity with respect to common construction materials such as concrete and steel. The test results are presented in Appendix B, *Laboratory Testing Program.* Test results are also discussed in Section 12.8, *Soil Corrosivity Evaluation.*
- R-Value: Two (2) representative bulk soil samples were tested for resistance value (R-value) in accordance with State of California Standard Method 301-G. This test is designed to provide a relative measure of soil strength for use in pavement design. The test results are presented in Appendix B, *Laboratory Testing Program.*

For additional information on the subsurface conditions, see the Logs of Borings in Appendix A, *Field Exploration*.

9.0 GEOTECHNICAL EVALUATION AND CONCLUSIONS

Based on the results of our background review, subsurface exploration, laboratory testing, geotechnical analyses, and understanding of the planned construction, the project site consists of the following geotechnical conditions:

- Relatively shallow depths of undocumented fill soils (clay) over firm older alluvial soils (clay) in the areas of planned water pipelines, well sites, and drain pipelines.
- Undocumented fill soils (silty sand) ranging from approximately 6.5 to 11.5 feet deep in the areas of the planned storage tank and booster pump/utility building. Based on our laboratory test results, the undocumented fill soils are compressible and require mitigation for foundation and slab support. The fill soils are underlain by firm older alluvial soils.
- Onsite clayey soils have a “medium” expansive potential, and require mitigation for foundation and slab support.

Due to compressible undocumented fill and expansive soils conditions, we recommend the planned areas of the wells, storage tank and booster pump/utility building be supported on compacted fill soils achieved through over-excavation and re-compaction. Depths of grading for remedial earthwork are anticipated to be 2 feet for the well locations. Over-

excavation for reservoir should be at least 8 feet below existing grade, or to the depth of fill, whichever is deeper. Over-excavation for building should be at least 12 feet below existing grade, or to the depth of fill, whichever is deeper. Over-excavation for pipelines is not needed.

Based on our understanding of the project, trenchless techniques may be utilized for installation of the drain pipeline planned below the Caltrans right-of-way (Interstate 405). The results of our subsurface exploration indicate relatively firm clay soils and a deep groundwater condition for this area. Therefore, it is our opinion that trenchless construction for the drain pipeline can be accomplished by an experienced contractor using pipe jacking/micro-tunneling equipment.

10.0 EARTHWORK AND SITE GRADING RECOMMENDATIONS

Based on our field exploration, laboratory testing, and analyses of subsurface conditions at the site, remedial grading will be required to prepare the planned areas of the wells, storage tank and booster pump/utility building for slab and foundation support. Vertical excavations greater than 5 feet at the site will require either shoring or sloped excavation. To reduce differential settlement of future at-grade improvements, the variations in the soil type, degree of compaction, and thickness of the compacted fill placed underneath future improvements should be kept uniform.

Site grading recommendations provided below are based on our experience with similar projects in the area and our evaluation of this study.

10.1 Excavatability

Based on our field exploration, the site soils should be excavatable with conventional heavy-duty earth-moving and trenching equipments. Temporary sloped excavation is feasible if performed in accordance with the slope ratios provided in Section 12.2, *Temporary Excavations.* If temporary sloped excavation is not feasible due to space limitations, temporary shoring is required. Existing utilities should be accurately located and either protected or removed as required.

10.2 Over-excavation/Removal

Existing soils below planned wells should be over-excavated to a depth of approximately 2 feet, moisture-conditioned if needed, and replaced as compacted fill. The remedial grading should extend at least 2 feet beyond the well foundation slab.

Due to compressible undocumented fill and expansive soils conditions, we recommend the planned areas of the wells, storage tank and booster pump/utility building be supported on compacted fill soils achieved through over-excavation and re-compaction.

Depths of grading for remedial earthwork are anticipated to be 2 feet for the well locations. Over-excavation for reservoir should be at least 8 feet below existing grade, or to the depth of fill, whichever is deeper. Over-excavation for building should be at least 12 feet below existing grade, or to the depth of fill, whichever is deeper. The extent and depth of over-excavation shall be verified and approved by a geotechnical consultant during grading operations. The remedial grading should extend laterally to a distance equal to the depth of removal, or at least 5 feet beyond the foundation/slab, whichever is greater. Over-excavation for pipelines is not needed.

For new pavement areas we recommend an over-excavation of at least two (2) feet below existing grades. The remedial grading should extent horizontally a distance equal to the depth of over-excavation.

10.3 Structural Fill

The bottom of the excavations should be scarified to a depth of at least six (6) inches and compacted to at least 90 percent of relative compaction, to establish a firm and unyielding surface for receiving compacted structural fill.

Prior to compaction, fill materials should be thoroughly mixed and moisture conditioned within two (2) percent of optimum moisture content for granular soils or at about three (3) percent above optimum moisture content for fine-grained soils.

Excavated site soils, free of deleterious materials and rocks greater than three (3) inches in the largest dimension, are suitable for placement as compacted fill. Any import fill should be tested and approved by a geotechnical consultant. All import fill should have an expansion potential less than 20.

To mitigate the expansive soils, we recommend at least 24 inches thick crushed aggregate base (CAB), i.e. Caltrans Class 2 aggregate base, be placed beneath reservoir foundations and slab. For pump station/utility building, at least 24 inches thick sandy soils (EI less than 20) or CAB shall be placed beneath foundations and slab.

All fill, if not specified otherwise elsewhere in this report, should be compacted to at least 90 percent of the laboratory dry density in accordance with the ASTM Standard D1557 test method. Crushed aggregate base beneath foundation and slab and the upper twelve (12) inches of fill underlying pavements should be compacted to at least 95 percent of the laboratory maximum dry density.

Moisture conditioning of excavated soils may be necessary prior to the material being placed as compacted fill. The amount of processing required for proper moisture conditioning at the site will depend on the seasonal variations in the *in-situ* moisture conditions, the depth of cut, the equipment, and the processing method.

10.4 Subterranean Structure Wall Backfill

Compaction of backfill adjacent to structural walls can produce excessive lateral pressures. Improper types and locations of compaction equipment and/or compaction techniques may damage the walls. The use of heavy compaction equipment should not be permitted within a horizontal distance of five (5) feet from the wall. Backfill behind any structural walls within the recommended 5-foot zone should be compacted using lightweight construction equipment such as handheld compactors to avoid overstressing the walls.

Excavated site soils, free of deleterious materials and rocks larger than three (3) inches in the largest dimension should be suitable for placement as compacted backfill. Care should be taken to avoid placing expansive, on-site fine-grained material within three (3) feet of structural walls. Any import fill should be tested for soil classification and expansion index (less than 20) and approved by a geotechnical consultant prior to delivery to the site.

As an alternative to compacted fill, Controlled Low-Strength Material (CLSM) can be used for backfill. CLSM is a low strength- and high slump- self compacted, cementitious material used primarily as backfill in lieu of compacted fill. CLSM shall be a mixture of Portland cement, fly ash or other approved materials, aggregates, water and admixtures proportioned to provide a non-segregating, self-consolidating, free-flowing and excavatable material, which will result in a hardened, dense, non-settling fill. CLSM used for backfill should have a cast density of 120 pcf minimum and a compressive strength at 28 days of 200 psi minimum and proportion to be a flowable, non-segregating, self-consolidating low shrink slurry.

10.5 Pipe Backfill Recommendations

It is anticipated that the natural soils will provide a firm foundation for planned water pipelines and drain pipelines. Any soft and/or unsuitable material encountered at the pipe invert should be removed and replaced with an adequate bedding material.

10.5.1 Pipe Subgrade Preparation

The pipe subgrade should be level, firm, uniform, free of loose materials and properly graded to provide uniform bearing and support to the entire section of the pipe placed on bedding material. Subgrade soil surfaces for pipeline should be scarified to a depth of at least six (6) inches and be compacted to a minimum of 90 percent relative compaction. Protruding oversize particles larger than two (2) inches in the largest dimension, if any, should be removed from the trench bottom and replaced with compacted materials. If yielding soft subgrade is encountered, we recommend over-excavate at least 18 inches, place geofabric (Mirafi HP570 or equivalent) at bottom of

excavation to receive 18 inches compacted base materials (CMB or equivalent). Base material should be compacted to at least 90 percent of relative compaction.

During the digging of depressions for proper sealing of the pipe joints, the pipe should rest on a prepared bottom for as near its full length as is practicable.

10.5.2 Pipe Bedding

Bedding is defined as the material supporting and surrounding the pipe to 12 inches above the pipe. To provide uniform and firm support for the pipe, compacted granular materials such as clean sand, gravel or ¾-inch crushed aggregate or crushed rock may be used as pipe bedding material. The type and thickness of the granular bedding placed underneath and around the pipe, if any, should be selected by the pipe designer. The load on the rigid pipes and deflection of flexible pipes and, hence, the pipe design, depends on the type and the amount of bedding placed underneath and around the pipe. Care should be taken to densify the bedding material below the springline of the pipe.

Pipe design generally requires a granular material with a sand equivalent (SE) greater than 30. Bedding material for the pipes should be free from oversized particles (greater than 1-inch). Therefore, on-site native materials and undocumented fill soils are not suitable to be used for pipe bedding.

Migration of fines from the surrounding native and/or fill soils must be considered in selecting the gradation of any imported bedding material. We recommend that the pipe bedding material should satisfy the following criteria:

$$D_{15} < 2.5 \text{ mm and } D_{50} < 19.0 \text{ mm}$$

Where D_{15} and D_{50} represent particle sizes of the bedding material corresponding to 15 percent and 50 percent passing by weight, respectively.

10.5.3 Trench Zone Backfill

The trench zone is defined as the portion of the trench above the pipe bedding extending up to the final grade level of the trench surface.

The following specifications are recommended to provide a basis for quality control during the placement of trench backfill.

Trench excavations to receive backfill shall be free of trash, debris or other unsatisfactory materials at the time of backfill placement. Excavated on-site soils free of oversize particles, defined as larger than one (1) inch in maximum dimension in the

upper 12 inches of subgrade soils and larger than three (3) inches in the largest dimension in the trench backfill below, and deleterious matter after proper processing may be used to backfill the trench zone. Imported trench backfill, if used, should be approved by the project geotechnical consultant prior to delivery at the site.

Trench backfill shall be compacted to 90 percent of the laboratory maximum dry density as per ASTM Standard D1557 test method. At least the upper twelve (12) inches of trench underlying pavements should be compacted to at least 95 percent of the laboratory maximum dry density.

Trench backfill shall be compacted by mechanical methods, such as sheepsfoot, vibrating or pneumatic rollers, or mechanical tampers, to achieve the density specified herein. The thickness of soil lifts/layers prior to compaction should not exceed eight (8) inches. Each layer shall be evenly spread, moistened or dried as necessary, and then tamped or rolled until the specified density has been achieved.

As an alternative to compacted fill for trench backfill, controlled low-strength material may be used. Please refer to report section 10.4 for specifications.

The contractor shall select the equipment and processes to be used to achieve the specified density without damage to adjacent ground and completed work. The field density of the compacted soil shall be measured by the ASTM Standard D1556 or ASTM Standard D2922 test methods or equivalent. Observation and field tests should be performed by Geotechnical Consultant during construction to confirm that the required degree of compaction has been obtained. Where compaction is less than that specified, additional effort shall be made with adjustment of the moisture content as necessary, until the specified compaction is obtained. It should be the responsibility of the contractor to maintain safe conditions during cut and/or fill operations. Trench backfill shall not be placed, spread or rolled during unfavorable weather conditions. When the work is interrupted by heavy rain, fill operations shall not be resumed until field tests by the project's geotechnical consultant indicate that the moisture content and density of the fill are as previously specified.

10.5.4 Flexible Pipe Joints

We recommend flexible joints should be installed to compensate possible differential settlements where the buried pipes interface with structures and for joints between the structures.

10.6 Expansive Soil Mitigation

The native soils at the site have a “medium” expansion potential. The onsite soil materials will be mixed during the grading and the expansion potential might change. Therefore, the

expansion potential of site soils should be verified after the grading. Slabs, foundations and pavement placed directly on expansive subgrade soil will likely crack over time.

The soil materials with expansion index higher than 20 should be mitigated. We recommend at least 24 inches thick crushed aggregate base (CAB), i.e. Caltrans Class 2 aggregate base, shall be placed beneath foundations and slab-on-grade to mitigate the expansive soils.

10.7 Shrinkage and Subsidence

For the remedial grading, the shrinkage and/or bulking of soils will depend on, among other factors, the depth of cut and/or fill, and the grading method and equipment utilized. For preliminary estimation, utilizing our current exploration information, bulking and shrinkage factors for various units of earth material at the site may be taken as presented below:

- The approximate shrinkage factor for native and undocumented fill soils is estimated to range from ten (10) to fifteen (15) percent.
- Subsidence would depend on the construction methods including type of equipment utilized. For estimation purposes, ground subsidence may be taken as 0.15 feet.

Although these values are only approximate, they represent our best estimates of the factors to be used to calculate lost volume that may occur during grading. If more accurate shrinkage and subsidence factors are needed, it is recommended that field-testing using the actual equipment and grading techniques be conducted.

10.8 Site Drainage

Adequate positive drainage should be provided away from building pad/excavation areas to prevent ponding and to reduce percolation of water into the foundation soils. Building pads should have a drainage gradient of at least two (2) percent towards drainage facilities.

A desirable drainage gradient is one (1) percent for paved areas and two (2) percent in landscaped areas.

Surface drainage should be directed to suitable non-erosive devices. Slope drainage should be constructed in accordance with the California Building Code (2010).

11.0 DESIGN RECOMMENDATIONS

The proposed well slabs, storage tank and booster pump/utility building should be supported on compacted fill soils. The subject site is located within an area underlain by variable depths of undocumented fill soils.

11.1 Shallow Foundation Design

The well slabs, storage tank and booster pump/utility building can be supported on slabs and shallow footings bearing on future compacted fill provided the following recommendations incorporated into design and construction.

11.1.1 Vertical Capacity

Footings should be founded at least 18 inches below lowest adjacent final grade on compacted fill. Footings should be at least 12 inches wide for continuous footings and 24 inches wide for isolated footings. The allowable dead plus live load bearing value is 2,000 psf for footings supported on 24-inch-thick compacted soil fill, and 3,000 psf for footings supported on 24-inch-thick compacted CAB. The allowable bearing pressure can be increased by 600 psf for each additional foot of excavation depth and by 300 psf for each additional foot of excavation width up to a maximum value of 4,500 psf.

The net allowable bearing values indicated above are for the dead loads and frequently applied live loads and are obtained by applying a factor of safety of 3.0 to the net ultimate bearing capacity.

11.1.2 Lateral Capacity

Resistance to lateral loads can be provided by friction acting at the base of the foundation and by passive earth pressure. A coefficient of friction of 0.3 may be assumed with normal dead load forces. An allowable passive earth pressure of 300 psf per foot of depth up to a maximum of 3,000 psf may be used for footings poured against compacted fill or native soil. The values of coefficient of friction and allowable passive earth pressure include a factor of safety of 1.5.

11.1.3 Settlement

The static settlement of structures supported on continuous and/or spread footings founded on competent native soils will depend on the actual footing dimensions and the imposed vertical loads. Most of the footing settlement at the project site is expected to occur immediately after the application of the load. Based on the maximum allowable net bearing pressures presented above, static settlement is anticipated to be less than

0.75 inch. Differential settlement is not expected to exceed one-half of the total settlement over a 50-foot span.

11.1.4 Dynamic Increases

Bearing values indicated above are for total dead load and frequently applied live loads. The above vertical bearing may be increased by 33% for short durations of loading which will include the effect of wind or seismic forces. The allowable passive pressure may be increased by 33% for lateral loading due to wind or seismic forces.

11.2 Slabs-on-grade

The design of the slab-on-grade will depend on, among other factors, the expansion potential of the pad soils. Based on the expansion index test performed during this evaluation, the expansion potential of the native site soils at a shallow depth is medium (EI 51 to 90). Slabs-on-grade supported directly on expansive soils should be designed accordingly. Mitigation of expansive soil is recommended in Section 10.6.

Slabs-on-grade should be supported on properly compacted fill. Compacted fill used to support slabs-on-grade should be placed and compacted in accordance with report section 10.0 Recommendations – Earthwork and Site Grading, and the general recommendations given in Appendix C, *Earthwork Specifications*.

Slabs-on-grade should have a minimum thickness of four (4) inches nominal for support of normal ground-floor live loads. Minimum reinforcement for slabs-on-grade should be No. 4 reinforcing bars, spaced at 24 inches on-center each way. The thickness and reinforcement of more heavily-loaded slabs will be dependent upon the anticipated loads and should be designed by a structural engineer. A static modulus of subgrade reaction equal to 150 pounds per square inch per inch may be used in structural design of concrete slabs-on-grade.

It is critical that the exposed subgrade soils should not be allowed to desiccate prior to the slab pour. Care should be taken during concrete placement to avoid slab curling. Slabs should be designed and constructed as promulgated by the ACI and Portland Cement Association (PCA). Prior to the slab pour, all utility trenches should be properly backfilled and compacted.

11.3 Modulus of Subgrade Reaction

Design of the structures supported on subgrade prepared in accordance with the recommendations provided in this report may be based on a soil modulus of subgrade reaction of (k_s) of 150 pounds per square inch per inch.

11.4 Retaining Wall Design

The following recommendations should be followed in the design and construction for any planned retaining structures. The earth pressure behind any buried wall depends primarily on the allowable wall movement, type of backfill materials, backfill slopes, wall inclination, surcharges, and any hydrostatic pressure. The following equivalent fluid pressures are recommended for vertical walls with no surcharge, and level backfill.

Table No. 7, Earth Pressures for Retaining Wall Design

Retaining Wall Types	Earth Pressure (Equivalent Fluid pressure)
Cantilever Wall (Active pressure)	45 pcf (triangular distribution)
Restrained Wall (At-rest pressure)	60 pcf (triangular distribution)

The recommended lateral pressures assume that the walls are fully back-drained to prevent build-up of hydrostatic pressure. Adequate drainage could be provided by means of permeable drainage materials wrapped in filter fabric installed behind the walls. The drainage system should consist of perforated pipe surrounded by one cubic foot of free draining, uniformly graded, ¾ -inch washed, crushed aggregate, and wrapped in filter fabric such as Mirafi 140N or equivalent, placed at bottom of wall. The filter fabric should overlap approximately 12 inches or more at the joints. The subdrain pipe should consist of perforated, four-inch diameter, rigid ABS (SDR-35) or PVC A-2000, or equivalent, with perforations placed down. Alternatively, a prefabricated drainage composite system such as the Miradrain G100N or equivalent can be used. The subdrain should be connected to a sump pump.

Design recommendations presented above are based on the assumption that retaining walls will retain either on-site soils or imported non-expansive soils that have been properly compacted. All backfill should be compacted to at least 90 percent relative compaction, with the comparative maximum density evaluated through laboratory testing in accordance with ASTM D 1557. Large equipment surcharge adjacent to newly constructed concrete walls should be avoided until the curing concrete reaches design strength. Backfill operations should be performed as specified in report section 10.

Surcharge pressures from other on-grade structures should be added to the above earth pressures for surcharges within a horizontal distance less than or equal to the wall height. Surcharge coefficients of 45% of any uniform vertical surcharge should be added as a horizontal wall pressure for walls retaining level backfill.

11.5 Structural Pavement Recommendations

The flexible pavement structural section design recommendations were performed using R-value of 5 for the subgrade soil in accordance with the *CALTRANS Highway Design Manual*, Chapter 630 without a factor of safety. No specific traffic study was performed to determine the Traffic Index (TI) for the proposed project. Pavement sections are provided for the Traffic Indices (TIs) ranging from 4 to 9. The recommended flexible pavement structural sections for various TI conditions are presented in the following table:

Table No. 8, Flexible Pavement Structural Sections

Design R-value	Design TI	Asphalt Concrete (AC) Over Aggregate Base (AB) Structural Sections		Full AC Structural Section
		AC (inches)	AB (inches)	AC (inches)
5	4	3	6.0	5.5
	5	4	7.5	7.0
	6	5	9.5	9.0
	7	6	11.5	10.5
	8	7	13.5	12.0
	9	8	15.0	13.5

Actual traffic index and traffic load should be determined by either Civil Engineer or Traffic Engineer. The above pavement sections are recommended as a guideline for basic usage of the indicated TI values, and may not be sufficient for actual traffic loading.

Base material shall conform to requirements for a Class 2 Aggregate Base (AB) or equivalent (such as crushed miscellaneous base - CMB) and should be placed in accordance with the requirements of the Standard Specifications for Public Works Construction (SSPWC, latest Edition).

Asphaltic materials should conform to Section 203-1, "*Paving Asphalt*," of the Standard Specifications for Public Works Construction (SSPWC, latest Edition) and should be placed in accordance with Section 302-5, "*Asphalt Concrete Pavement*," of the SSPWC, 2009 edition.

11.6 Soil Corrosivity Evaluation

Converse retained the services of Environmental Geotechnical Laboratory, Inc., located in Arcadia, California, to test two (2) bulk soil samples taken in the general area of the

proposed improvements. The tests included minimum resistivity, pH, soluble sulfates, and chloride content, with the results summarized on the following table:

Table No. 9, Corrosivity Test Results

Boring No.	Sample Depth (feet)	pH (Caltrans 643)	Soluble Chlorides (Caltrans 422) ppm	Soluble Sulfate (Caltrans 417) ppm	Saturated Resistivity (Caltrans 643) Ohm-cm
BH-1	1-5	8.30	105	360	970
BH-7	0-5	7.48	230	10	1,500

The pH value and chloride content of soil samples tested are in the non-corrosive range to ferrous metal. The saturated resistivity is in the potentially corrosive range to ferrous metal. The soluble sulfate concentrations tested are in the non-corrosive range to concrete according to the *California Department of Transportation Corrosion Guidelines*, dated September 2003.

If imported soils are used during construction, additional testing and evaluation of the as-graded soils is recommended. A corrosion engineer may be consulted for appropriate mitigation procedures and construction design, if needed. Conventional corrosion mitigation measures may include the following:

- Steel and wire concrete reinforcement should have at least three inches of concrete cover where cast against soil, unformed.

- Below-grade ferrous metals should be given a high-quality protective coating, such as 18-mil plastic tape, extruded polyethylene, coal-tar enamel, or Portland cement mortar.

- Below-grade metals should be electrically insulated (isolated) from above-grade metals by means of dielectric fittings in ferrous utilities and/or exposed metal structures breaking grade.

11.7 Site Drainage

Adequate positive drainage should be provided away from the structures to prevent ponding and to reduce percolation of water into structural backfill. A desirable slope for surface drainage is two (2) percent in landscaped areas and one (1) percent in paved areas.

Planters and landscaped areas adjacent to the building perimeter should be designed to minimize water infiltration into the subgrade soils. Gutters and downspouts should be

installed on the roof, and runoff should be directed to the storm drain through non-erosive devices. Lower level walkways and open patio areas may require special drainage provisions and sump pumps to provide suitable drainage.

11.8 Soil Parameters for Pipe Design

Structural design of pipeline requires proper evaluation of all possible loads acting on the walls, including dead and live or transient loads. The stresses and strains induced on the walls depend on many factors, including the type of soil density, bearing pressure, angle of internal friction, coefficient of passive earth pressure, and coefficient of friction at the interface between the backfill and native soils.

The recommended values of the various soil parameters for the pipe design are provided below:

- Average compacted fill unit weigh — γ=125 pcf
- Angle of internal friction of soils — ϕ = 30º
- Soil cohesion — c = 0 psf
- Coefficient of friction between backfill and native soils — f_s = 0.30
- Bearing pressure against alluvial soils or compacted fill — 1,500 psf
- Coefficient of passive earth pressure — K_p = 3.0

11.9 Bearing Pressure for Anchor and Thrust Blocks

Allowable net bearing pressure of 1,500 pounds per square foot may be used for anchor and thrust block design against existing fill and alluvium. Such thrust blocks should be at least 24 inches wide.

Resistance to lateral forces can be assumed provided by friction at the base of thrust blocks and by passive earth pressure. Frictional and passive resistance can be combined for the design of anchors and thrust blocks.

An ultimate value of coefficient of friction of 0.3 may be used between the thrust block and the supporting natural soil or compacted fill. A passive earth pressure of 300 psf per foot of depth may be used for the sides of thrust blocks or anchors poured against undisturbed or compacted fill. The value of the passive lateral earth pressure should be limited to 1,500 psf.

If normal code requirements are applied for design, the above recommended bearing capacity and passive resistances may be increased by 33 percent for short duration loading such as seismic or wind loading.

11.10 Modulus of Soil Reaction (E')

Deflection control in flexible pipe installation involves assessment of the deflection occurring during installation as well as that occurring due to the service loads (i.e. soils and superimposed loading). The modulus of Soil Reaction presented in the following table is determined using U.S. Bureau of Reclamation method. The pipe should be designed based on a composite modulus of soil reaction which depends on a modulus of soil reaction of native soils, pipe embedment material and a ratio of trench width to pipe diameter.

Table No. 10, Modulus of Soil Reaction

Material	E', psi
Native Soils or Compacted Fill	1,000
Pipe embedment per gravel	2,000
Composite Modulus for the minimum ratio of trench width to pipe diameter of 2	1,400

12.0 CONSTRUCTION RECOMMENDATIONS

12.1 General

Site soils should be excavatable using conventional heavy-duty excavating equipment. Temporary sloped excavation is feasible if performed in accordance with the slope ratios provided in Section 12.2, *Temporary Excavations*. Existing utilities should be accurately located and either protected or removed as required.

12.2 Temporary Excavations

Based on the materials encountered in the exploratory borings, sloped temporary excavations may be constructed according to the slope ratios presented in Table No. 11, *Slope Ratios for Temporary Excavation*. Any loose utility trench backfill or other fill encountered in excavations will be less stable than the native soils. Temporary cuts encountering loose fill or loose dry sand should be constructed at a flatter gradient than presented in the following table:

Table No. 11, Slope Ratios for Temporary Excavation

Maximum Depth of Cut (feet)	Maximum Slope Ratio* (horizontal: vertical)
0 – 5	vertical
5 – 9	1:1
9+	1.5:1

*Slope ratio assumed to be uniform from top to toe of slope.

Surfaces exposed in slope excavations should be kept moist but not saturated to minimize raveling and sloughing during construction. Adequate provisions should be made to protect the slopes from erosion during periods of rainfall. Surcharge loads, including construction, should not be placed within five (5) feet of the unsupported trench edge. The above maximum slopes are based on a maximum height of six (6) feet of stockpiled soils placed at least five (5) feet from the trench edge.

All applicable requirements of the California Construction and General Industry Safety Orders, the Occupational Safety and Health Act of 1987 and current amendments, and the Construction Safety Act should be met. The soils exposed in cuts should be observed during excavation by the project's geotechnical consultant. If potentially unstable soil conditions are encountered, modifications of slope ratios for temporary cuts may be required.

12.3 Special Consideration for Excavation Adjacent to Existing Structures

Various utility lines and existing structure foundations may be within the excavation limits for the proposed project. The depths and locations of the existing facilities may require special construction considerations during excavation to protect these facilities (if necessary) during excavation.

Temporary excavations for the proposed improvements should not extend below a 1:1 (horizontal: vertical) plane extending beyond and down from the bottom of the existing utility lines or foundations. The remedial grading excavations should not cause loss of bearing and/or lateral support for adjacent off-site utilities or structures.

If remedial grading excavations extend below a 1:1 horizontal:vertical (H:V) plane extending beyond and down from the bottom of adjacent off-site utility lines or structure foundations, shoring shall be employed. Backfill should be accomplished in the shortest period of time possible and in alternating sections.

12.4 Temporary Shoring

Due to site constraints (such as roadway pavement), sloped and/or stepped excavations may not always be feasible, thus requiring the need for shoring during construction. Shoring may consist of the use of a trench box (where feasible), and/or sheet piles. The shoring for pipeline excavations and trenchless construction jacking/receiving pits may be cantilevered or may be laterally supported by whalers and cross bracing. The shoring system should be designed to limit a maximum wall deflection of ½ inch.

Earth materials encountered in our borings within the anticipated construction zone consist of predominately clay soils. In consideration of the predominately clayey nature of the site soils, caving is not anticipated.

12.4.1 Cantilevered Shoring

Cantilevered shoring systems may include sheet piles to maintain temporary support of vertical wall excavations. Shoring design must consider the support of adjacent underground utilities and/or structures, and should consider the effects of shoring deflection on supported improvements.

Temporary cantilevered shoring should be designed to resist a lateral earth pressure equivalent to a fluid density of 30 pounds per cubic foot (pcf) for non-surcharged condition above groundwater level.

Surcharge pressures from the existing structures should be added to the above earth pressures for surcharges within a horizontal distance less than or equal to the wall height. Surcharge coefficients of 45% of any uniform vertical surcharge should be added as a horizontal earth pressure for shoring design.

Surcharge pressures due to miscellaneous loads, such as vehicular traffic, soil stockpiles or construction equipments located adjacent to the shoring, should be included in the upper 10 feet of the shoring to account for normal vehicular and construction traffic within 10 feet of the excavation. Regular traffic surcharge can be considered as 100 psf for the upper 10 fee of shoring excavation. Construction surcharge of 500 psf should be considered for the heavy construction vehicle/equipment. All shoring should be designed and installed in accordance with state and federal safety regulations.

Lateral resistance for sheet piles can be provided by passive pressure below the bottom of excavations. The allowable passive pressure for soldier piles can be taken as an equivalent fluid pressure of 300 psf on the pile per foot of depth, measured below the bottom of excavation. The allowable maximum passive resistance should not exceed 3,000 psf.

All shoring system should be designed by experienced California licensed Civil Engineer and installed by experienced contractors. Shoring design should also be reviewed by Geotechnical Consultant to verify the soil parameters used in the design conformance with geotechnical report.

All applicable requirements of the California Construction and General Industry Safety Orders, the Occupational Safety and Health Act of 1987 and current amendments, and the Construction Safety Act should be met. The soils exposed in cuts should be observed during excavation by a competent person employed by the contractor. If potentially unstable soil conditions are encountered, modifications of slope ratios for temporary cuts may be required.

It is recommended that Converse review plans and specifications for proposed shoring and that a Converse representative observes the installation of shoring. A licensed surveyor should be retained to establish monuments on shoring and the surrounding ground prior to excavation. Such monuments should be monitored for horizontal and vertical movement during construction. Results of the monitoring program should be provided immediately to the project Structural (shoring) Engineer and Converse for review and evaluation. Adjacent building elements should be photo-documented prior to construction.

12.5 Trenchless Construction

Based on our understanding of the project, trenchless techniques may be utilized for the drain pipeline planned below the Caltrans right-of-way. The results of our subsurface exploration indicate relatively firm clay soils and deep groundwater for this area. It is our opinion that trenchless construction at this location can be accomplished by an experienced contractor using pipe jacking/micro-tunneling equipment.

Pipe jacking and micro-tunneling operations involve the initial construction of a jacking/tunneling pit and a receiving pit at each end of the pipe segment to be jacked. Micro-tunneling occupies a position at the heavy end of trenchless technology, and can be regarded as an extension of pipe jacking where a new pipe is pushed through a hole excavated ahead of the advancing pipe string. Whereas traditional pipe jacking requires a team of workers at the face, micro-tunneling replaces this manual work with a small tunnel boring machine (TBM).

The working/access shafts are utilized to remove the spoil and to transport the construction materials and personnel for a tunnel project. The vertical face of the working shaft should be supported with shoring. Frequent contact grouting may be necessary to backpack the shoring during construction to minimize settlement.

Grouting through the pipe casing after jacking is recommended to fill any possible voids created by the jacking operation. Jacking operations and tunneling operations should be performed in accordance with the Standard Specifications for Public Works Construction, Sections 306-2 and 306-3 to the latest edition.

Consideration should be given to performing a pre-condition survey of improvements in the area prior to construction, to document any current existing distress. Settlement points should be considered to monitor any settlement of adjacent facilities during construction.

Excavation and shoring systems should be properly designed and installed to minimize the effect of settlement during construction. The preparation of plans for the excavation and shoring is normally the responsibility of the contractor. Such plans should be submitted to the engineer for review prior to construction. Consideration should be given to characterize the material during the excavation of tunnel and based on the behavior of the soil the support system and method of trenchless may be altered accordingly.

It is the contractor's responsibility to design and select the appropriate tunnel construction method, support system and to follow the requirements of the health and safety rules of the State of California pertaining to micro-tunnel construction and permit requirement of local agencies.

12.6 Geotechnical Services During Construction

This report has been prepared to aid in the site preparation and site grading plans and specifications, and to assist the architect, civil and structural engineers in the design of the proposed structures. It is recommended that this office be provided an opportunity to review final design drawings and specifications to verify that the recommendations of this report have been properly implemented.

Recommendations presented herein are based upon the assumption that adequate earthwork monitoring will be provided by a geotechnical consultant. Excavation bottoms should be observed by a Converse representative prior to the placement of compacted fill. Structural fill and backfill should be placed and compacted during continuous observation and testing by a geotechnical consultant. Footing excavations should be observed by a geotechnical consultant prior to placement of steel and concrete so that footings are founded on satisfactory materials and excavations are free of loose and disturbed materials.

During construction, the geotechnical engineer and/or their authorized representatives should be present at the site to provide a source of advice to the client regarding the geotechnical aspects of the project and to observe and test the earthwork performed.

Their presence should not be construed as an acceptance of responsibility for the performance of the completed work, since it is the sole responsibility of the contractor performing the work to ensure that it complies with all applicable plans, specifications, ordinances, etc.

This firm does not practice or consult in the field of safety engineering. We do not direct the contractor's operations, and cannot be responsible for other than our own personnel on the site; therefore, the safety of others is the responsibility of the contractor.

13.0 CLOSURE

The findings and recommendations of this report were prepared in accordance with generally accepted professional engineering and engineering geologic principles and practice. We make no other warranty, either expressed or implied. Our conclusions and recommendations are based on the results of the background review, field and laboratory studies, combined with an interpolation and extrapolation of soil conditions between and beyond boring locations. If conditions encountered during construction appear to be different from those shown by the borings, this office should be notified.

Design recommendations given in this report are based on the assumption that the earthwork and site grading recommendations contained in this report are implemented. Additional consultation may be prudent to interpret Converse's findings for contractors, or to possibly refine these recommendations based upon the review of the final site grading and actual site conditions encountered during construction. If the scope of the project changes, if project completion is to be delayed, or if the report is to be used for another purpose, this office should be consulted.

This geotechnical report was prepared for AECOM to aid in the design and construction of the project elements described herein. Converse is not responsible for technical interpretations made by others of our exploratory information. Specific questions or interpretations concerning the findings and conclusions presented herein may require a written clarification to avoid any misunderstandings.

14.0 REFERENCES

AMERICAN SOCIETY OF CIVIL ENGINEERS, *ASCE/SEI 7-05, Minimum Design Loads for Structures and Other Structures*, copyright 2006.

ASTM INTERNATIONAL, Annual Book of ASTM Standards, Current.

BLAKE, T. F., 2000, UBCSEIS, FRISKSP, and EQSEARCH Computer Programs for Performing Probabilistic, and Seismic Coefficient Analysis and Historical Earthquake Search, using 2002 CGS Fault Model, Computer Model Files, CGS Source Data, Maps for Performing Probabilistic Seismic Hazard Analysis.

BRANUM, D., et. al., 2008, Earthquake Shaking Potential for California, Map Sheet 48, California Geologic Survey.

CALIFORNIA BUILDING STANDARDS COMMISSION, 2010, *California Building Code* (CBC), California Code of Regulations Title 24, Part 2, Volumes 1 and 2, effective date January 2011.

CALIFORNIA DEPARTMENT OF TRANPORTATION, 2003, Corrosion Guidelines, Version 1.0, dated September, 2003.

CALIFORNIA DIVISION OF MINES AND GEOLOGY, Fault-Rupture Hazard Zones in California, Alquist-Priolo Earthquake Faulting Zoning Act with Index to Earthquake Fault Zone Maps, Special Publication 42, Revised 1997, Supplements 1 and 2 added 1999, Supplement 3 added in 2003.

CALIFORNIA DIVISION OF MINES AND GEOLOGY, 1998, Seismic Hazard Zone Report for the Torrance 7.5-Minute Quadrangles, Los Angeles County, California, Seismic Hazard Zone Report 035.

CALIFORNIA DIVISION OF MINES AND GEOLOGY, 1999, Seismic Hazard Zones Map, Torrance 7.5-Minute Quadrangle, Los Angeles County, California, Official Map dated March 25, 1999.

CALIFORNIA GEOLOGIC SURVEY, 2003, Geologic Map of the Long Beach 30’ x 60’ Quadrangle, Version 1.0, dated January 1, 2011.

CALIFORNIA GEOLOGIC SURVEY, *Guidelines for Evaluating and Mitigating Seismic Hazards in California, Special Publication 117A*, 2008.

CALIFORNIA GEOLOGIC SURVEY – Note 48, 2011, Checklist for the Review of Engineering Geology and Seismology Reports for California Public Schools, Hospitals, and Essential Services Structures, dated January 1, 2011.

CAO, T., et. al., 2003, The Revised 2002 California Probabilistic Seismic Hazard Maps, June 2003, pp. 1-11, Appendix A.

CIVILTECH SOFTWARE, *LiquefyPro, Version 5.8d, A Computer Program for Computation of Liquefaction and Seismic Settlements.*

CIVILTECH SOFTWARE, *AllPile, Version 7.9a, A Computer Program for Pile Analysis.*

DAY, Robert W., 2006, Foundation Engineering Handbook.

DEPARTMENT OF THE NAVY, Naval Facilities Engineering Command, Alexandria, VA, *SOIL MECHANICS, DESIGN MANUAL 7.01 (NAVFAC DM-7.01)*, 1982.

DEPARTMENT OF THE NAVY, Naval Facilities Engineering Command, Alexandria, VA, *FOUNDATIONS AND EARTH BUILDINGS, DESIGN MANUAL 7.02 (NAVFAC DM-7.02)*, 1986.

DOLAN, J.F., SIEH, K., ROCKWELL, T.K., GUPTILL, P., and MILLER G., 1997, Active Tectonics, Paleoseismology, and Seismic Hazards of the Hollywood Fault, Northern Los Angeles Basin, California: GSA Bulletin, v. 109, p. 1595-1616.

DOLAN, J.F., et. al., 2003, Recognition of Paleo Earthquakes on the Puente Hills Blind Thrust Fault, California, April 4, 2003, Science, Vol. 300, pp. 115-118.

EZ-FRISK, Version 7.32, 2009, “Software for Earthquake Ground Motion Estimation”, Risk Engineering, Inc.

NATIONAL CENTER FOR EARTHQUAKE ENGINEERING RESEARCH (NCEER), *Proceedings of the NCEER Workshop on Evaluation of Liquefaction Resistance of Soils*, Edited by T. L. Youd and I. M. Idriss, Technical Report NCEER-97-0022, 1997.

PORTLAND CEMENT ASSOCIATION, Southwest Region Publication P-14, Portland Cement Concrete Pavement Design Nomograph for City and County Roads.

SEED, H.B. AND WHITMAN, R. V. 1970. Design of Earth Retaining Structures for Dynamic Loads, ASCE Specialty Conference, Lateral Stresses in the Ground and Design of Earth Retaining Structures, p.103-147.

SHAW, J.H., et al., 2002, Puente Hills Blind-Thrust System, Los Angeles, California: Bulletin of the Seismological Society of America, December 2002, v. 92, no. 8, p. 2946-2960.

SOUTHERN CALIFORNIA EARTHQUAKE CENTER, *Recommended Procedures for Implementation of DMG Special Publication 117* Guidelines *for Analyzing and Mitigating Liquefaction in California*, March 1999.

STANDARD SPECIFICATIONS FOR PUBLIC WORKS CONSTRUCTION, 2009, Public Works Standards, Inc.

STATE OF CALIFORNIA DEPARTMENT OF TRANSPORTATION, California Tests 643, 422, 417 and 532.

TOKIMATSU, K. AND SEED, H. B., 1987; *Evaluation of Settlement in Sands Due to Earthquake Shaking,* ASCE Journal of Geotechnical Engineering, Vol. 118.

TOPPOZADA, T., et. al., 2000, Epicenters of and Areas Damaged by M ≥ 5 California Earthquakes, 1800-1999, Map Sheet 49, California Geologic Survey.

UNITED STATES GEOLOGICAL SURVEY, 2011, *Seismic Hazards Curves, Response Parameters and Design Parameters, Version 5.1.0*, Computer Program by the United States Geological Survey dated February 10, 2011.

APPENDIX A

FIELD EXPLORATION

APPENDIX A

FIELD EXPLORATION

Field work included site reconnaissance and subsurface exploration consisting of advancing eight (8) hollow stem auger borings drilled to depths of 16.5 to 31.5 feet. During the site reconnaissance, the surface conditions were noted, and the approximate locations of the borings were marked for utility clearance. The exploratory boring were approximately located using existing boundary and other features as a guide and should be considered accurate only to the degree implied by the method used. The various field study methods performed are discussed below.

Encountered earth materials were continuously logged by a Converse professional and classified in the field by visual examination in accordance with the Unified Soil Classification System (USCS) where appropriate, field descriptions and classifications have been modified to reflect laboratory test results.

Sampling Procedures

Ring samples of the subsurface materials were obtained at frequent intervals in the exploratory borings using a drive sampler (2.4-inches inside diameter and 3.0-inches outside diameter) lined with sample rings. The steel ring sampler was driven into the bottom of the borehole with successive drops of a 140-pound driving weight falling 30 inches, using an automatic hammer. Samples are retained in brass rings (2.4-inches inside diameter and 1.0-inch in height). The central portion of the sample was retained and carefully sealed in waterproof plastic containers for shipment to the Converse laboratory. Blow counts for each sample interval are presented on the logs of borings. Bulk samples of typical soil types were also obtained.

Standard Penetration Test (SPT) was also performed using a standard (1.4-inches inside diameter and 2.0-inches outside diameter) split-barrel sampler. The mechanically driven hammer for the SPT sampler was 140 pounds, failing 30 inches for each blow. The recorded blow counts for every six inches for a total of 1.5 feet of sampler penetration are shown on the Logs of Borings in the "BLOWS" column. The standard penetration test was performed in accordance with the ASTM Standard D1586 test method.

It should be noted that the exact depths at which material changes occur cannot always be established accurately. Unless a more precise depth can be established by other means, changes in material conditions that occur between driven samples are indicated in the logs at the top of the next drive sample. A key to soil symbols and terms is presented as Drawing No. A-1. The log of the exploratory boring is presented in Drawing Nos. A-2 through A-9, *Log of Borings*.

SOIL CLASSIFICATION CHART

MAJOR DIVISIONS			SYMBOLS GRAPH	SYMBOLS LETTER	TYPICAL DESCRIPTIONS
COARSE GRAINED SOILS MORE THAN 50% OF MATERIAL IS LARGER THAN NO. 200 SIEVE SIZE	GRAVEL AND GRAVELLY SOILS MORE THAN 50% OF COARSE FRACTION RETAINED ON NO. 4 SIEVE	CLEAN GRAVELS (LITTLE OR NO FINES)		GW	WELL-GRADED GRAVELS, GRAVEL - SAND MIXTURES, LITTLE OR NO FINES
				GP	POORLY-GRADED GRAVELS, GRAVEL - SAND MIXTURES, LITTLE OR NO FINES
		GRAVELS WITH FINES (APPRECIABLE AMOUNT OF FINES)		GM	SILTY GRAVELS, GRAVEL - SAND - SILT MIXTURES
				GC	CLAYEY GRAVELS, GRAVEL - SAND - CLAY MIXTURES
	SAND AND SANDY SOILS MORE THAN 50% OF COARSE FRACTION PASSING ON NO. 4 SIEVE	CLEAN SANDS (LITTLE OR NO FINES)		SW	WELL-GRADED SANDS, GRAVELLY SANDS, LITTLE OR NO FINES
				SP	POORLY-GRADED SANDS, GRAVELLY SAND, LITTLE OR NO FINES
		SANDS WITH FINES (APPRECIABLE AMOUNT OF FINES)		SM	SILTY SANDS, SAND - SILT MIXTURES
				SC	CLAYEY SANDS, SAND - CLAY MIXTURES
FINE GRAINED SOILS MORE THAN 50% OF MATERIAL IS SMALLER THAN NO. 200 SIEVE SIZE	SILTS AND CLAYS	LIQUID LIMIT LESS THAN 50		ML	INORGANIC SILTS AND VERY FINE SANDS, ROCK FLOUR, SILTY OR CLAYEY FINE SANDS OR CLAYEY SILTS WITH SLIGHT PLASTICITY
				CL	INORGANIC CLAYS OF LOW TO MEDIUM PLASTICITY, GRAVELLY CLAYS, SANDY CLAYS, SILTY CLAYS, LEAN CLAYS
				OL	ORGANIC SILTS AND ORGANIC SILTY CLAYS OF LOW PLASTICITY
	SILTS AND CLAYS	LIQUID LIMIT GREATER THAN 50		MH	INORGANIC SILTS, MICACEOUS OR DIATOMACEOUS FINE SAND OR SILTY SOILS
				CH	INORGANIC CLAYS OF HIGH PLASTICITY
				OH	ORGANIC CLAYS OF MEDIUM TO HIGH PLASTICITY, ORGANIC SILTS
HIGHLY ORGANIC SOILS				PT	PEAT, HUMUS, SWAMP SOILS WITH HIGH ORGANIC CONTENTS

NOTE: DUAL SYMBOLS ARE USED TO INDICATE BORDERLINE SOIL CLASSIFICATIONS

BORING LOG SYMBOLS

SAMPLE TYPE

- STANDARD PENETRATION TEST — Split barrel sampler in accordance with ASTM D-1586-84 Standard Test Method
- DRIVE SAMPLE — 2.42" I.D. sampler.
- DRIVE SAMPLE — No recovery
- BULK SAMPLE
- GROUNDWATER WHILE DRILLING
- GROUNDWATER AFTER DRILLING

LABORATORY TESTING ABBREVIATIONS

TEST TYPE
(Results shown in Appendix B)

CLASSIFICATION

Plasticity	pl
Grain Size Analysis	ma
Passing No. 200 Sieve	wa
Sand Equivalent	se
Expansion Index	ei
Compaction Curve	max
Hydrometer	h

STRENGTH

Pocket Penetrometer	p
Direct Shear	ds
Direct Shear (single point)	ds*
Unconfined Compression	uc
Triaxial Compression	tx
Vane Shear	vs
Consolidation	c
Collapse Test	col
Resistance (R) Value	r
Chemical Analysis	ca
Electrical Resistivity	er

UNIFIED SOIL CLASSIFICATION AND KEY TO BORING LOG SYMBOLS

Converse Consultants

Project Name
NORTH TORRANCE WELLFIELD PROJECT
CITY OF TORRANCE, CALIFORNIA

Project No. 10-31-228-01

Drawing No. A-1

Log of Boring No. BH-1

Dates Drilled: 7/8/2011 Logged by: SMW Checked By: GDS

Equipment: 8" HOLLOW STEM AUGER Driving Weight and Drop: 140 lbs / 30 in

Ground Surface Elevation (ft): N/A Depth to Water (ft): NOT ENCOUNTERED

Depth (ft)	Graphic Log	SUMMARY OF SUBSURFACE CONDITIONS This log is part of the report prepared by Converse for this project and should be read together with the report. This summary applies only at the location of the boring and at the time of drilling. Subsurface conditions may differ at other locations and may change at this location with the passage of time. The data presented is a simplification of actual conditions encountered.	SAMPLES DRIVE	SAMPLES BULK	BLOWS	MOISTURE (%)	DRY UNIT WT. (pcf)	OTHER
		4" ASPHALT OVER 7" BASE						
		OLDER ALLUVIUM (Qoa): **CLAY WITH SAND (CL):** fine-grained sand, dark brown.						ma,ei,r ca,er
5		**CLAY (CL):** trace fine-grained sand, some silt, trace gravels up to 3/4" in maximum dimension, trace caliche, olive brown.			3/5/7	17	99	
10		**CLAYEY SILT (ML):** olive brown.			5/11/16	22	101	
15					3/5/7	21	102	
		End of borehole at 16.5 feet. Groundwater not encountered during drilling. Borehole backfilled with cement slurry and capped with asphalt cold patch on 7-8-2011.						

Converse Consultants

Project Name
NORTH TORRANCE WELLFIELD PROJECT
CITY OF TORRANCE, CALIFORNIA

Project No. 10-31-228-01

Drawing No. A-2

Log of Boring No. BH-2

Dates Drilled: 7/8/2011 Logged by: SMW Checked By: GDS

Equipment: 8" HOLLOW STEM AUGER Driving Weight and Drop: 140 lbs / 30 in

Ground Surface Elevation (ft): N/A Depth to Water (ft): NOT ENCOUNTERED

Depth (ft)	Graphic Log	SUMMARY OF SUBSURFACE CONDITIONS This log is part of the report prepared by Converse for this project and should be read together with the report. This summary applies only at the location of the boring and at the time of drilling. Subsurface conditions may differ at other locations and may change at this location with the passage of time. The data presented is a simplification of actual conditions encountered.	SAMPLES DRIVE	SAMPLES BULK	BLOWS	MOISTURE (%)	DRY UNIT WT. (pcf)	OTHER
		3.5" ASPHALT OVER 7" BASE						
		FILL (Af): **CLAY WITH SAND (CL):** fine-grained sand, dark brown.						
5			■		3/6/9	24	97	ds
		OLDER ALLUVIUM (Qoa): **CLAY (CL):** trace of silt, olive brown.						
10		-trace caliche	■		6/12/16	24	99	
15			■		6/11/14	23	96	
		End of borehole at 16.5 feet. Groundwater not encountered during drilling. Borehole backfilled with cement slurry and capped with asphalt cold patch on 7-8-2011.						

Converse Consultants

Project Name
NORTH TORRANCE WELLFIELD PROJECT
CITY OF TORRANCE, CALIFORNIA

Project No. 10-31-228-01

Drawing No. A-3

Log of Boring No. BH-3

Dates Drilled: 7/8/2011 Logged by: SMW Checked By: GDS

Equipment: 8" HOLLOW STEM AUGER Driving Weight and Drop: 140 lbs / 30 in

Ground Surface Elevation (ft): N/A Depth to Water (ft): NOT ENCOUNTERED

Depth (ft)	Graphic Log	SUMMARY OF SUBSURFACE CONDITIONS This log is part of the report prepared by Converse for this project and should be read together with the report. This summary applies only at the location of the boring and at the time of drilling. Subsurface conditions may differ at other locations and may change at this location with the passage of time. The data presented is a simplification of actual conditions encountered.	SAMPLES DRIVE	SAMPLES BULK	BLOWS	MOISTURE (%)	DRY UNIT WT. (pcf)	OTHER
		3" ASPHALT OVER 10" BASE						
		FILL (Af): **CLAY WITH SAND (CL):** fine-grained sand, dark brown.						ma,max,r
5					6/11/17	17	111	
		OLDER ALLUVIUM (Qoa): **CLAY WITH SAND (CL):** fine-grained sand, trace coarse-grained sand, trace caliche, olive brown.						
10					5/13/20	21	105	
15					7/15/18	14	109	
		End of borehole at 16.5 feet. Groundwater not encountered during drilling. Borehole backfilled with cement slurry and capped with asphalt cold patch on 7-8-2011.						

Converse Consultants

Project Name
NORTH TORRANCE WELLFIELD PROJECT
CITY OF TORRANCE, CALIFORNIA

Project No. 10-31-228-01

Drawing No. A-4

Log of Boring No. BH-4

Dates Drilled: 7/8/2011 Logged by: SMW Checked By: GDS

Equipment: 8" HOLLOW STEM AUGER Driving Weight and Drop: 140 lbs / 30 in

Ground Surface Elevation (ft): N/A Depth to Water (ft): NOT ENCOUNTERED

Depth (ft)	Graphic Log	SUMMARY OF SUBSURFACE CONDITIONS This log is part of the report prepared by Converse for this project and should be read together with the report. This summary applies only at the location of the boring and at the time of drilling. Subsurface conditions may differ at other locations and may change at this location with the passage of time. The data presented is a simplification of actual conditions encountered.	SAMPLES DRIVE	SAMPLES BULK	BLOWS	MOISTURE (%)	DRY UNIT WT. (pcf)	OTHER
		FILL (Af): **SANDY CLAY (CL):** fine to medium-grained sand, dark brown.						
		OLDER ALLUVIUM (Qoa): **CLAY (CL):** trace fine-grained sand, some silt, trace gravels up to 1/2" in maximum dimension, light olive brown.						
5		-trace caliche	■		5/15/24	20	104	c
10		-trace coarse-grained sand, trace orange oxidation	■		6/17/26	23	98	ds
15			■		7/17/22			
		End of borehole at 16.5 feet. Groundwater not encountered during drilling. Borehole backfilled with cement slurry and capped with asphalt cold patch on 7-8-2011.						

Converse Consultants

Project Name
NORTH TORRANCE WELLFIELD PROJECT
CITY OF TORRANCE, CALIFORNIA

Project No. 10-31-228-01

Drawing No. A-5

Log of Boring No. BH-5

Dates Drilled: 7/8/2011 Logged by: SMW Checked By: GDS

Equipment: 8" HOLLOW STEM AUGER Driving Weight and Drop: 140 lbs / 30 in

Ground Surface Elevation (ft): N/A Depth to Water (ft): NOT ENCOUNTERED

Depth (ft)	Graphic Log	SUMMARY OF SUBSURFACE CONDITIONS This log is part of the report prepared by Converse for this project and should be read together with the report. This summary applies only at the location of the boring and at the time of drilling. Subsurface conditions may differ at other locations and may change at this location with the passage of time. The data presented is a simplification of actual conditions encountered.	SAMPLES DRIVE	SAMPLES BULK	BLOWS	MOISTURE (%)	DRY UNIT WT. (pcf)	OTHER
		4.5" ASPHALT OVER 22" BASE						
		FILL (Af): **CLAY WITH SAND (SC):** fine-grained sand, gravels up to 1/2" in maximum dimension, brown.						
5		**OLDER ALLUVIUM (Qoa):** **CLAY (CL):** trace coarse-grained sand and silt, black.	■	▨	4/7/10	22	102	ma
10		**CLAY WITH SAND (CL):** fine-grained sand, gravels up to 1" in maximum dimension, olive brown.	■		8/15/21	21	104	
15		**CLAYEY SILT WITH SAND (ML):** fine-grained sand, gravels up to 1 1/4" in maximum dimension, yellow brown.	☒		4/6/8			
		End of borehole at 16.5 feet. Groundwater not encountered during drilling. Borehole backfilled with cement slurry and capped with asphalt cold patch on 7-8-2011.						

Converse Consultants

Project Name
NORTH TORRANCE WELLFIELD PROJECT
CITY OF TORRANCE, CALIFORNIA

Project No. 10-31-228-01

Drawing No. A-6

Log of Boring No. BH-6

Dates Drilled: 7/7/2011 Logged by: SMW Checked By: GDS

Equipment: 8" HOLLOW STEM AUGER Driving Weight and Drop: 140 lbs / 30 in

Ground Surface Elevation (ft): N/A Depth to Water (ft): NOT ENCOUNTERED

Depth (ft)	Graphic Log	SUMMARY OF SUBSURFACE CONDITIONS This log is part of the report prepared by Converse for this project and should be read together with the report. This summary applies only at the location of the boring and at the time of drilling. Subsurface conditions may differ at other locations and may change at this location with the passage of time. The data presented is a simplification of actual conditions encountered.	SAMPLES DRIVE	SAMPLES BULK	BLOWS	MOISTURE (%)	DRY UNIT WT. (pcf)	OTHER
		FILL (Af): **SANDY CLAY (CL):** fine-grained sand, brown.						
		OLDER ALLUVIUM (Qoa): **CLAY (CL):** trace fine-grained sand and silt, light brown.						
5		-trace organic rootlets, light brown	■		13/13/16	20	99	
10		-trace caliche	■		13/25/34	16	109	
15			■		7/18/22	33	94	c
20			■		7/20/34	20	108	
25		**SILTY SAND (SM):** fine-grained, yellow brown.	☒		7/10/13			
30		-little amount of fossile shells	☒		5/7/13			
		End of borehole at 31.5 feet. Groundwater not encountered during drilling. Borehole backfilled with soil cuttings on 7-7-2011.						

Converse Consultants

Project Name
NORTH TORRANCE WELLFIELD PROJECT
CITY OF TORRANCE, CALIFORNIA

Project No. 10-31-228-01

Drawing No. A-7

Log of Boring No. BH-7

Dates Drilled: 7/7/2011 Logged by: SMW Checked By: GDS

Equipment: 8" HOLLOW STEM AUGER Driving Weight and Drop: 140 lbs / 30 in

Ground Surface Elevation (ft): N/A Depth to Water (ft): NOT ENCOUNTERED

Depth (ft)	Graphic Log	SUMMARY OF SUBSURFACE CONDITIONS This log is part of the report prepared by Converse for this project and should be read together with the report. This summary applies only at the location of the boring and at the time of drilling. Subsurface conditions may differ at other locations and may change at this location with the passage of time. The data presented is a simplification of actual conditions encountered.	SAMPLES DRIVE	SAMPLES BULK	BLOWS	MOISTURE (%)	DRY UNIT WT. (pcf)	OTHER
		FILL (Af): **SILTY SAND (SM):** fine to medium-grained, trace gravels up to 1 1/4" in maximum dimension, trace brick debris, brown.		X				max,ds,ei ca,er
5		**CLAY (CL):** some silt, tan.	X		16/17/12	18	105	
10		**SANDY CLAY (CL):** fine-grained sand, little amount of wood and plastic debris, gray brown.	X		8/7/7	18	108	c
		OLDER ALLUVIUM (Qoa): **SANDY CLAY (CL):** fine to medium-grained sand, olive brown.						
15		-trace fine-grained sand, olive brown	X		17/28/35	25	97	c
20		**CLAY (CL):** trace fine to coarse-grained and silt, gravels up to 1/4" in maximum dimension, olive.	X		6/11/16	20	108	
25		**SANDY SILT (ML):** fine-grained sand, trace fine gravels up to 3/4" in maximum dimension, orange oxidation, yellow brown.	X		5/9/8			
30		-some amount of fossile shells	X		6/13/13			
		End of borehole at 31.5 feet. Groundwater not encountered during drilling. Borehole backfilled with soil cuttings on 7-7-2011.						

Converse Consultants

Project Name
NORTH TORRANCE WELLFIELD PROJECT
CITY OF TORRANCE, CALIFORNIA

Project No. 10-31-228-01

Drawing No. A-8

Log of Boring No. BH-8

Dates Drilled: 7/7/2011 Logged by: SMW Checked By: GDS

Equipment: 8" HOLLOW STEM AUGER Driving Weight and Drop: 140 lbs / 30 in

Ground Surface Elevation (ft): N/A Depth to Water (ft): NOT ENCOUNTERED

Depth (ft)	Graphic Log	SUMMARY OF SUBSURFACE CONDITIONS This log is part of the report prepared by Converse for this project and should be read together with the report. This summary applies only at the location of the boring and at the time of drilling. Subsurface conditions may differ at other locations and may change at this location with the passage of time. The data presented is a simplification of actual conditions encountered.	SAMPLES DRIVE	SAMPLES BULK	BLOWS	MOISTURE (%)	DRY UNIT WT. (pcf)	OTHER
		FILL (Af): **SILTY SAND (SM):** fine to medium-grained, gravels up to 1/2" in maximum dimension, dark brown.						
5		**SANDY CLAY (CL):** fine-grained sand, trace gravels up to 2" in maximum dimension, dark brown.	■		6/9/8	22	100	
		OLDER ALLUVIUM (Qoa): **CLAY (CL):** trace fine to coarse-grained sand and silt, trace gravels up to 1/2" in maximum dimension, olive brown.						
10			■		10/16/17	22	99	c
15		-trace caliche	■		8/14/18	28	93	
20		**CLAYEY SILT (ML):** trace fine to coarse-grained sand, olive.	■		11/18/23			dist.
25		**SANDY SILT (ML):** fine-grained sand, yellow brown.	☒		3/6/9			
30		**CLAY (CL):** trace fine-grained sand and silt, trace gravels up to 1 1/4" in maximum dimension, yellow brown.	☒		5/6/7			
		End of borehole at 31.5 feet. Groundwater not encountered during drilling. Borehole backfilled with soil cuttings on 7-7-2011.						

Converse Consultants

Project Name
NORTH TORRANCE WELLFIELD PROJECT
CITY OF TORRANCE, CALIFORNIA

Project No. 10-31-228-01

Drawing No. A-9

APPENDIX B

LABORATORY TESTING PROGRAM

APPENDIX B

LABORATORY TESTING PROGRAM

Tests were conducted in our laboratory on representative soil samples for the purpose of classification and evaluation of their relevant physical characteristics and engineering properties. The amount and selection of tests were based on the geotechnical requirements of the project. Test results are presented herein and on the Logs of Borings in Appendix A, *Field Exploration*. The following is a summary of the laboratory tests conducted for this project.

Moisture Content and Dry Density

Results of moisture content and dry density tests, performed on relatively undisturbed ring samples were used to aid in the classification of the soils and to provide quantitative measure of the *in situ* dry density. Data obtained from this test provides qualitative information on strength and compressibility characteristics of site soils. For test results, see the Logs of Borings in Appendix A, *Field Exploration*.

Grain-Size Analysis

To assist in classification of soils, mechanical grain-size analyses were performed on three (3) selected samples. Testing was performed in general accordance with the ASTM Standard C136 test method. Grain-size curves are shown in Drawing No. B-1, *Grain Size Distribution Results*.

Maximum Dry Density Test

Two (2) laboratory maximum dry density-moisture content relationship tests were performed on representative bulk samples of the soil materials. The testing was conducted in accordance with ASTM Standard D1557 laboratory procedure. The test result is presented on Drawing No. B-2, *Moisture-Density Relationship Results*.

Direct Shear

Direct shear testing was performed on two (2) relatively undisturbed in-situ samples and one (1) remolded sample at soaked moisture conditions. For each test, three brass sampler rings were placed, one at a time, directly into the test apparatus and subjected to a range of normal loads appropriate for the anticipated conditions. The sample was then sheared at a constant strain rate of 0.01 inch/minute. Shear deformation was recorded until a maximum of about 0.25-inch shear displacement was achieved. Ultimate strength was selected from the shear-stress deformation data and plotted to determine the shear strength parameters. For test data, including sample density and moisture content, see Drawing Nos. B-3a through B-3c, *Direct Shear Test Results*.

Consolidation

Consolidation test was performed on five (5) relatively undisturbed in-situ samples. Data obtained from this test procedure was used to evaluate the settlement characteristics of the foundation soils under load. Preparation for this test involved trimming the sample and placing the one-inch high brass ring into the test apparatus, which contained porous stones, both top and bottom, to accommodate drainage during testing. Normal axial loads were applied to one end of the sample through the porous stones, and the resulting deflections were recorded at various time periods. The load was increased after the sample reached a reasonable state equilibrium. Normal loads were applied at a constant load-increment ratio, successive loads being generally twice the preceding load. The sample was tested at field and submerged conditions. The test results, including sample density and moisture content, are presented in Drawing Nos. B-4a through 4e, *Consolidation Test Results*.

Expansion Index

Two (2) representative bulk samples were tested to evaluate the expansion potential of materials encountered at the site. Test results are presented in the following table:

Table No. B-1, Expansion Index Test Results

Boring No.	Depth (feet)	Soil Description	Expansion Index	Expansion Potential
BH-1	1-5	Clay with Sand(CL)	70	Medium
BH-7	0-5	Silty Sand (SM)	9	Very Low

Soil Corrosivity

Two (2) representative soil samples were tested to evaluate minimum electrical resistivity, pH, and chemical content, including soluble sulfate and chloride concentrations. The purpose of these tests is to determine the corrosion potential of site soils when placed in contact with common construction materials. These tests were performed by Environmental Geotechnical Laboratory, Inc. (EGL), located in Arcadia, California. The test results received from EGL are included in the following table:

Table No. B-2, Corrosivity Test Results

Boring No.	Sample Depth (feet)	pH (Caltrans 643)	Soluble Chlorides (Caltrans 422) ppm	Soluble Sulfate (Caltrans 417) ppm	Saturated Resistivity (Caltrans 643) Ohm-cm
BH-1	1-5	8.30	105	360	970
BH-7	0-5	7.48	230	10	1,500

APPENDIX C

EARTHWORK SPECIFICATIONS

R-value

Representative bulk soil samples were tested for resistance value (R-value) in accordance with State of California Standard Method 301-G. This test is designed to provide a relative measure of soil strength for use in pavement design. The test result is shown in the following table:

Table No. B-3, R-value Test Result

Boring No.	Depth, ft	Soil Classification	Measured R-value
BH-1	1-5	Clay with Sand(CL)	5
BH-3	1-5	Clay with Sand (CL)	5

Sample Storage

Soil samples presently stored in our laboratory will be discarded 30 days after the date of this report, unless this office receives a specific request to retain the samples for a longer period.

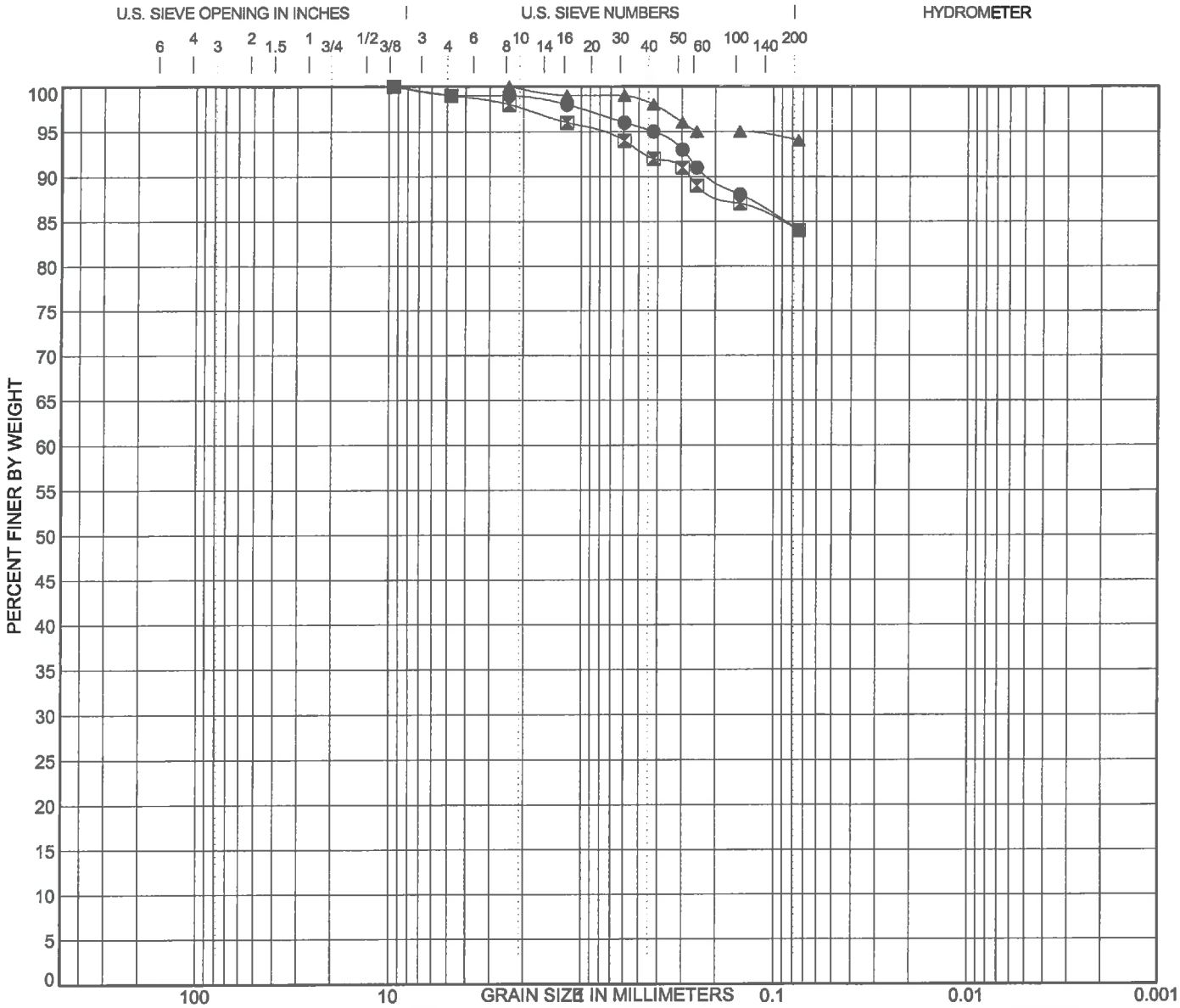

COBBLES	GRAVEL		SAND			SILT OR CLAY
	coarse	fine	coarse	medium	fine	

	Boring No.	Depth (ft)	Description	LL	PL	PI	Cc	Cu
●	BH-1	1-5	CLAY WITH SAND (CL)					
⊠	BH-3	1-5	CLAY WITH SAND (CL)					
▲	BH-5	5-10	CLAY (CL)					

	Boring No.	Depth (ft)	D100	D60	D30	D10	%Gravel	%Sand	%Silt	%Clay
●	BH-1	1-5	9.5				1.0	16	84	
⊠	BH-3	1-5	9.5				1.0	16	84	
▲	BH-5	5-10	2.38				0.0	6	94	

GRAIN SIZE DISTRIBUTION RESULTS

Converse Consultants

Project Name
NORTH TORRANCE WELLFIELD PROJECT
CITY OF TORRANCE, CALIFORNIA

Project No.
10-31-228-01

Drawing No.
B-1

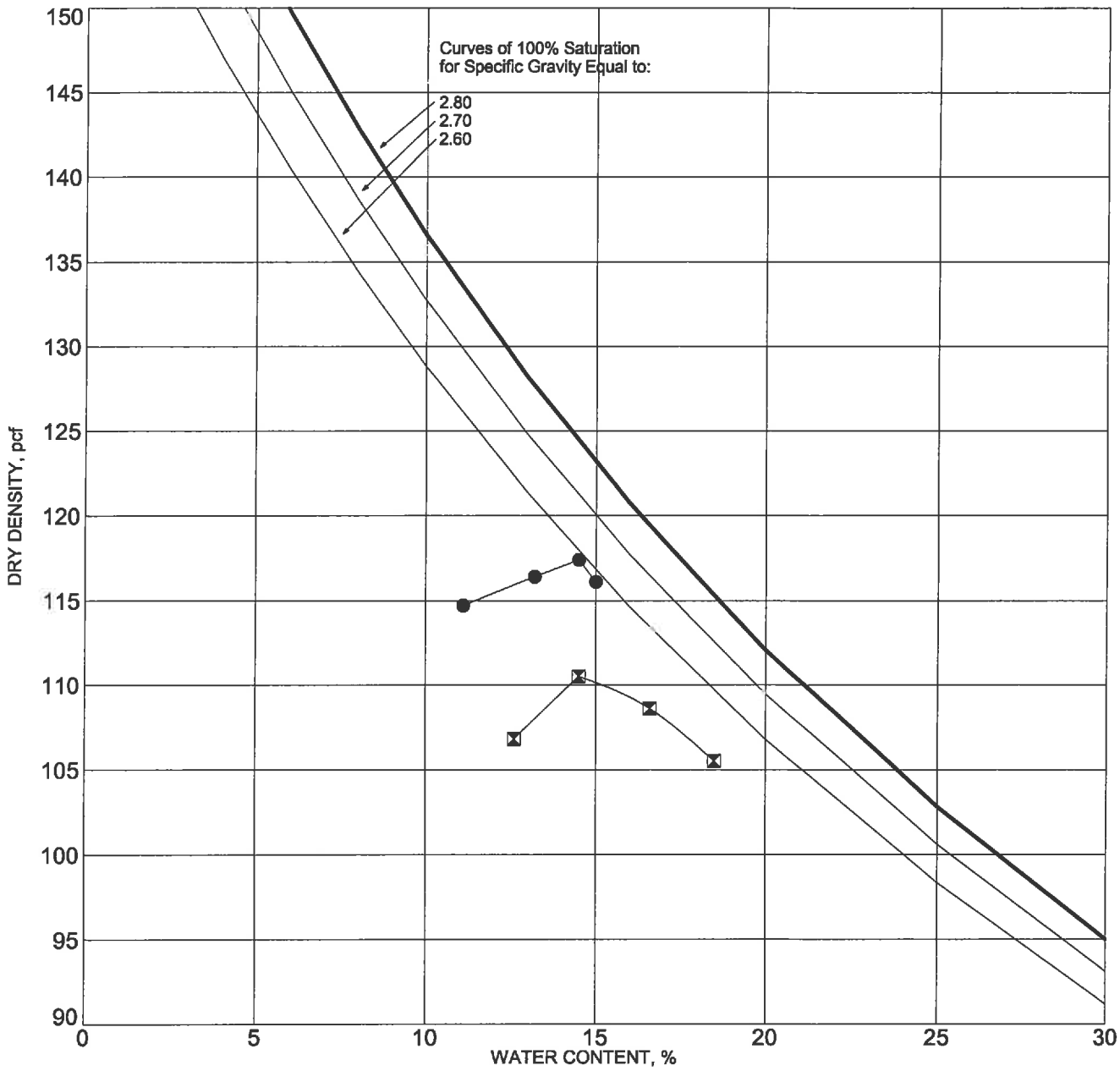

SYMBOL	BORING NO.	DEPTH (ft)	DESCRIPTION	ASTM TEST METHOD	OPTIMUM WATER, %	MAXIMUM DRY DENSITY, pcf
●	BH-3	1-5	CLAY (CL)	D1557 Method B	14.4	117.4
⊠	BH-7	0-5	SILTY SAND (SM)	D1557 Method B	15.2	111.2

MOISTURE-DENSITY RELATIONSHIP RESULTS

Converse Consultants

Project Name
NORTH TORRANCE WELLFIELD PROJECT
CITY OF TORRANCE, CALIFORNIA

Project No.
10-31-228-01

Drawing No.
B-2

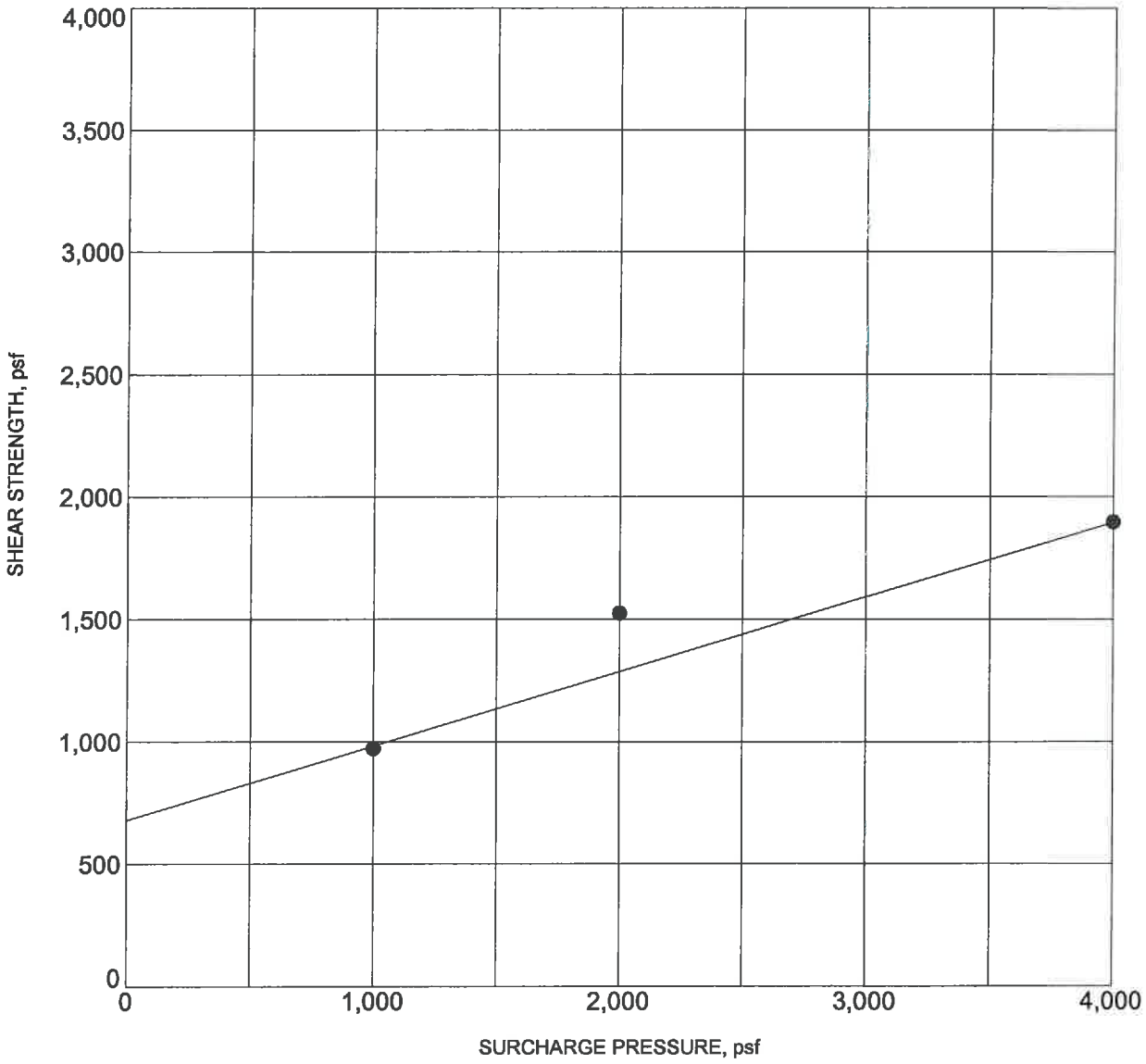

BORING NO. :	BH-2	DEPTH (ft) :	5
DESCRIPTION :	CLAY WITH SAND (CL)		
COHESION (psf) :	650	FRICTION ANGLE (degrees):	17
MOISTURE CONTENT (%) :	24.0	DRY DENSITY (pcf) :	96.5

NOTE: Ultimate Strength.

DIRECT SHEAR TEST RESULTS

Converse Consultants

Project Name
NORTH TORRANCE WELLFIELD PROJECT
CITY OF TORRANCE, CALIFORNIA

Project No. 10-31-228-01

Drawing No. B-3a

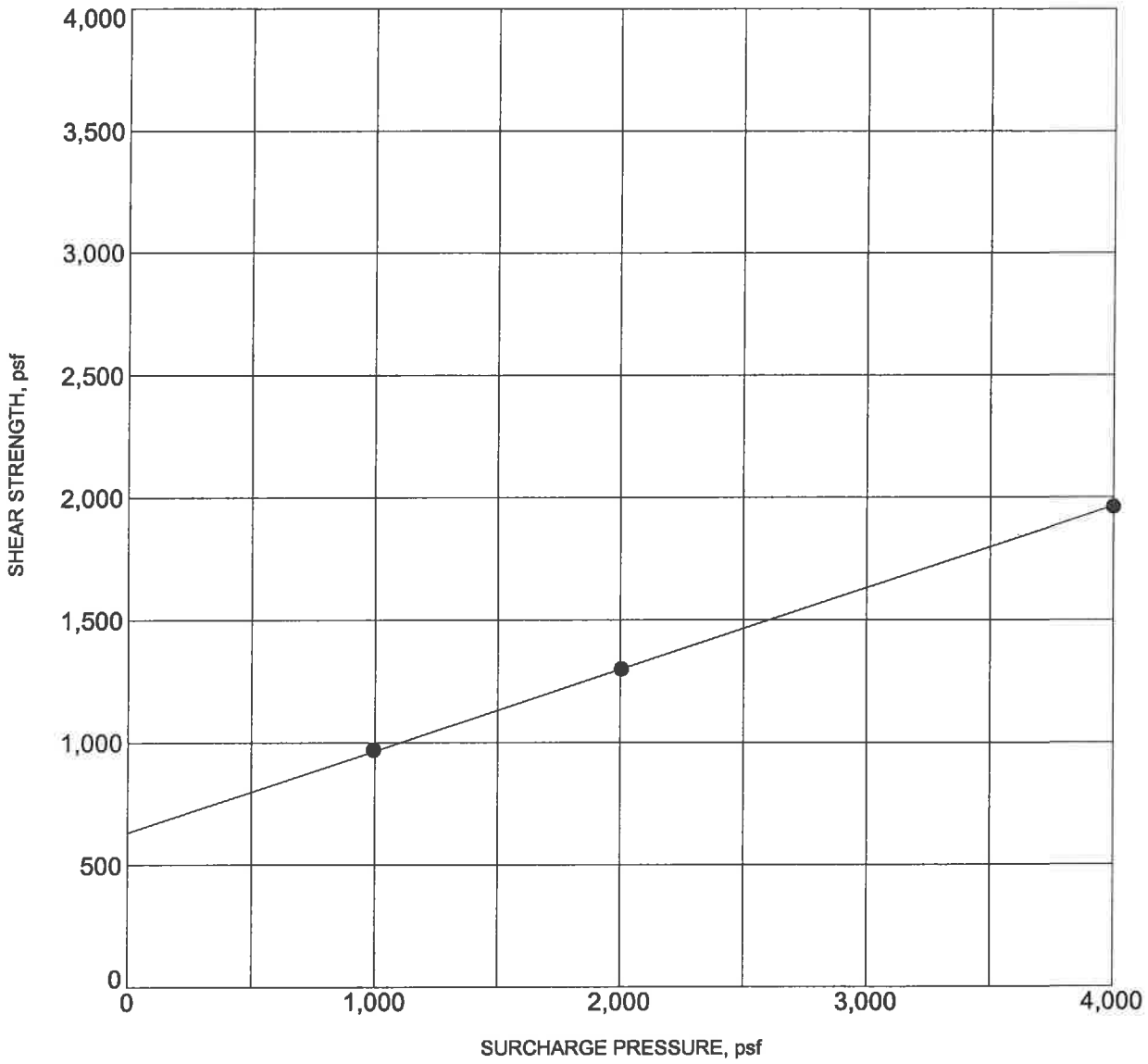

BORING NO. :	BH-4	DEPTH (ft) :	10
DESCRIPTION :	CLAY (CL)		
COHESION (psf) :	650	FRICTION ANGLE (degrees):	17
MOISTURE CONTENT (%) :	22.8	DRY DENSITY (pcf) :	98.1

NOTE: Ultimate Strength.

DIRECT SHEAR TEST RESULTS

Converse Consultants

Project Name
NORTH TORRANCE WELLFIELD PROJECT
CITY OF TORRANCE, CALIFORNIA

Project No. 10-31-228-01

Drawing No. B-3b

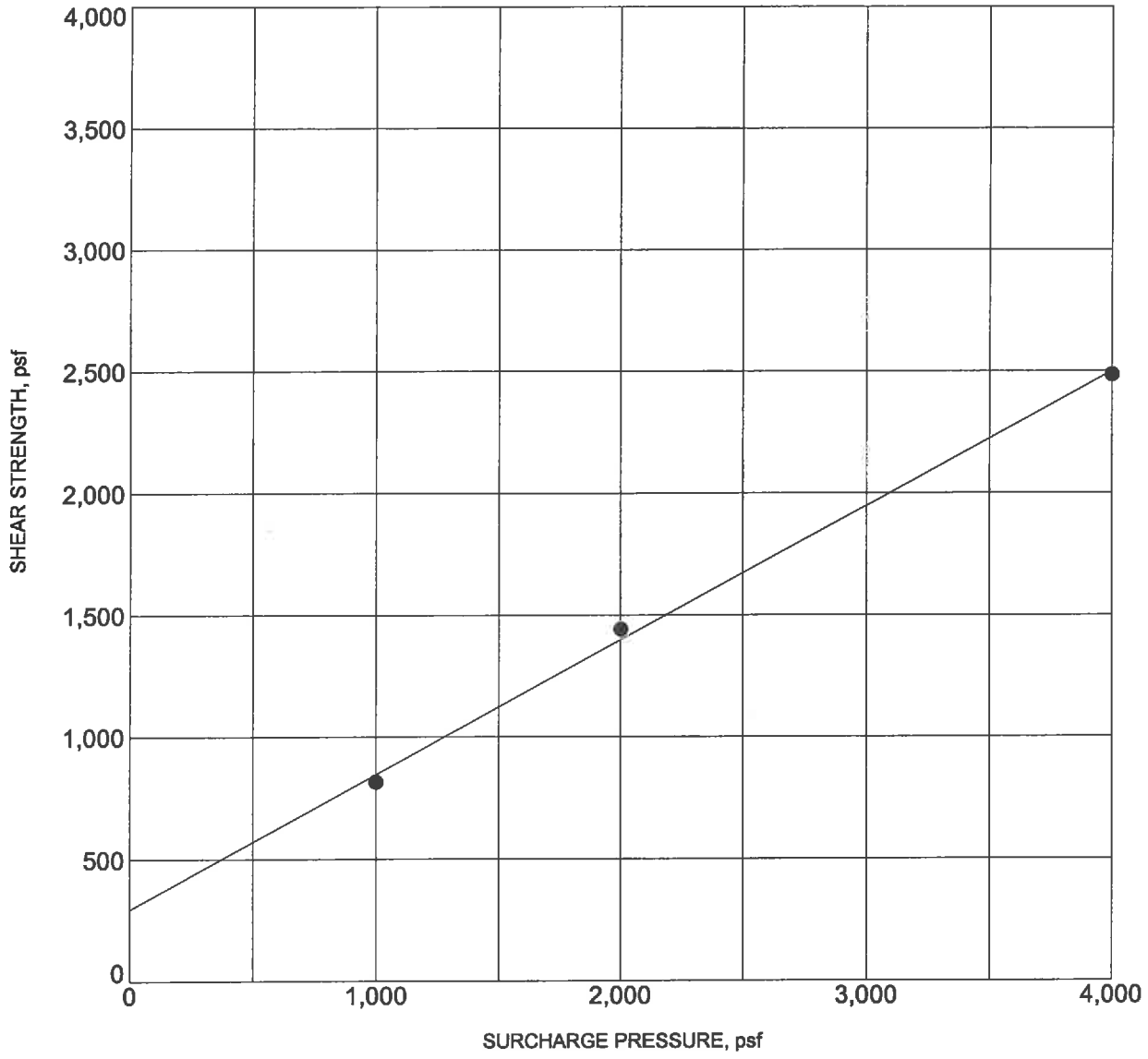

BORING NO. :	BH-7	DEPTH (ft) :	0-5
DESCRIPTION :	SILTY SAND (SM)		
COHESION (psf) :	300	FRICTION ANGLE (degrees):	29
MOISTURE CONTENT (%) :	15.8	DRY DENSITY (pcf) :	98.9

NOTE: Ultimate Strength. Remolded to 90% relative compaction.

DIRECT SHEAR TEST RESULTS

Converse Consultants

Project Name
NORTH TORRANCE WELLFIELD PROJECT
CITY OF TORRANCE, CALIFORNIA

Project No. 10-31-228-01

Drawing No. B-3c

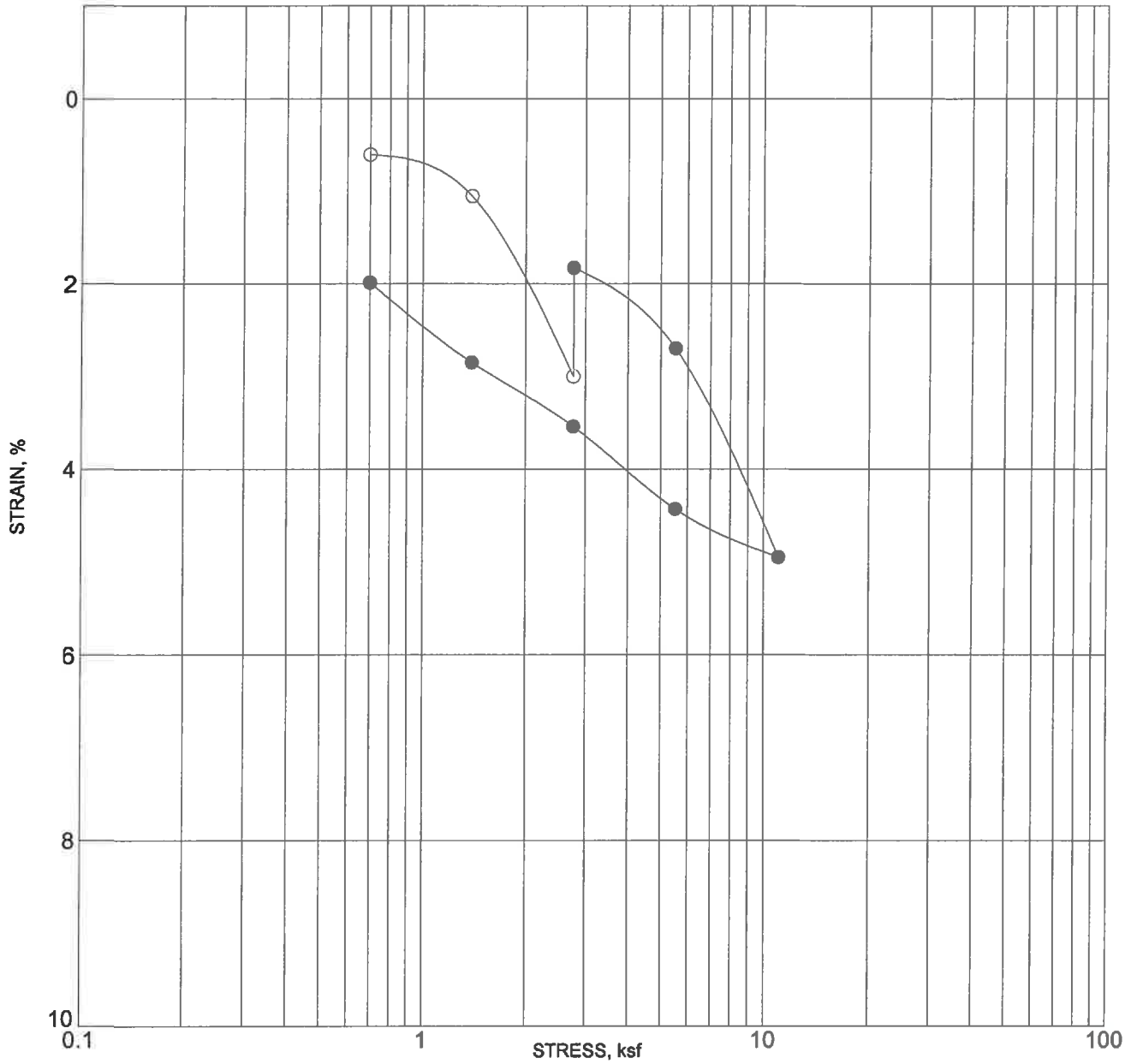

BORING NO. :	BH-4	DEPTH (ft) :	5
DESCRIPTION :	CLAY (CL)		

	MOISTURE CONTENT (%)	DRY DENSITY (pcf)	PERCENT SATURATION	VOID RATIO
INITIAL	20	103.9		
FINAL	24.5	103.9		

NOTE: SOLID CIRCLES INDICATE READINGS AFTER ADDITION OF WATER

CONSOLIDATION TEST RESULTS

Converse Consultants

Project Name
NORTH TORRANCE WELLFIELD PROJECT
CITY OF TORRANCE, CALIFORNIA

Project No. 10-31-228-01

Drawing No. B-4a

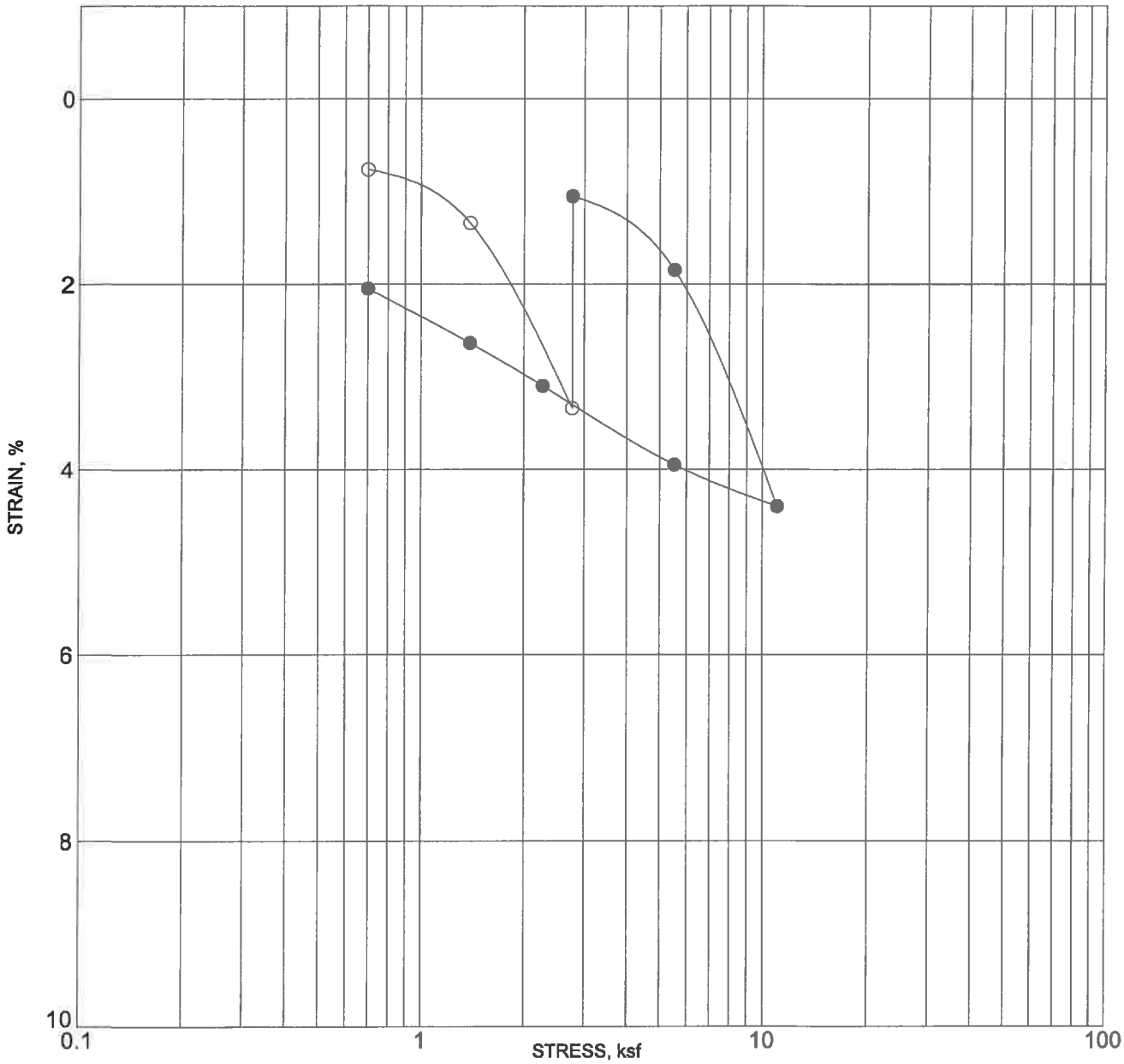

BORING NO. :	BH-6	DEPTH (ft) :	15
DESCRIPTION :	CLAY (CL)		

	MOISTURE CONTENT (%)	DRY DENSITY (pcf)	PERCENT SATURATION	VOID RATIO
INITIAL	32.5	93.5		
FINAL	37.1	93.5		

NOTE: SOLID CIRCLES INDICATE READINGS AFTER ADDITION OF WATER

CONSOLIDATION TEST RESULTS

Converse Consultants

Project Name
NORTH TORRANCE WELLFIELD PROJECT
CITY OF TORRANCE, CALIFORNIA

Project No. 10-31-228-01

Drawing No. B-4b

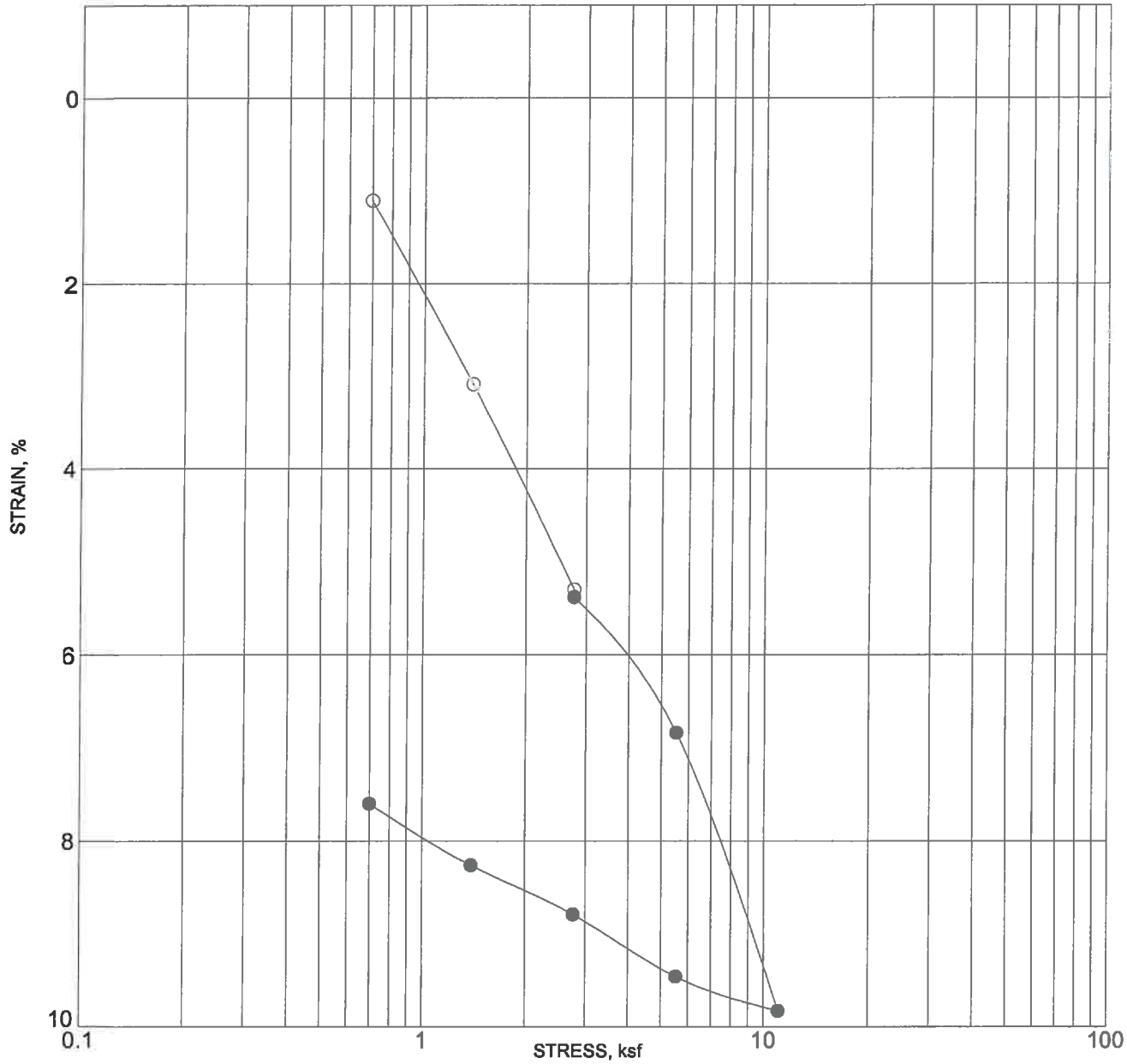

BORING NO. :	BH-7	DEPTH (ft) :	10
DESCRIPTION :	SANDY CLAY (CL)		

	MOISTURE CONTENT (%)	DRY DENSITY (pcf)	PERCENT SATURATION	VOID RATIO
INITIAL	17.9	108.3		
FINAL	21.4	108.3		

NOTE: SOLID CIRCLES INDICATE READINGS AFTER ADDITION OF WATER

CONSOLIDATION TEST RESULTS

Converse Consultants

Project Name
NORTH TORRANCE WELLFIELD PROJECT
CITY OF TORRANCE, CALIFORNIA

Project No. 10-31-228-01

Drawing No. B-4c

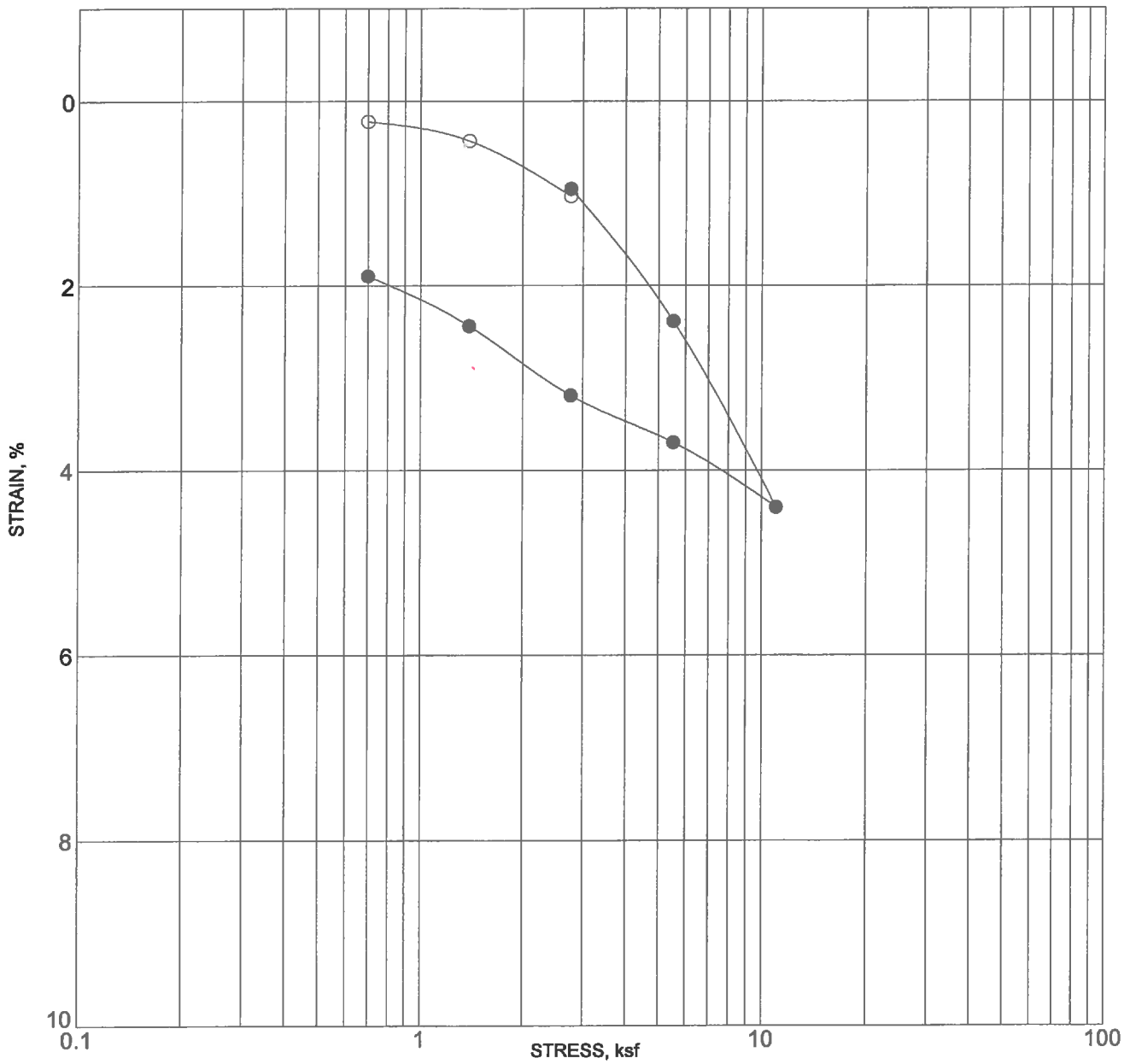

BORING NO. :	BH-7	DEPTH (ft) :	15
DESCRIPTION :	SANDY CLAY (CL)		

	MOISTURE CONTENT (%)	DRY DENSITY (pcf)	PERCENT SATURATION	VOID RATIO
INITIAL	24.6	97.1		
FINAL	28.3	97.1		

NOTE: SOLID CIRCLES INDICATE READINGS AFTER ADDITION OF WATER

CONSOLIDATION TEST RESULTS

Converse Consultants

Project Name
NORTH TORRANCE WELLFIELD PROJECT
CITY OF TORRANCE, CALIFORNIA

Project No. 10-31-228-01

Drawing No. B-4d

APPENDIX C

EARTHWORK SPECIFICATIONS

C1.1 Scope of Work

The work includes all labor, supplies and construction equipment required to construct the planned project in a good, workmanlike manner, as shown on the drawings and herein specified. The major items of work covered in this section include the following:

- Site Inspection
- Authority of Geotechnical Engineer
- Site Clearing
- Excavations
- Preparation of Fill Areas
- Placement and Compaction of Fill
- Observation and Testing

C1.2 Site Inspection

1. The Contractor shall carefully examine the site and make all inspections necessary, in order to determine the full extent of the work required to make the completed work conform to the drawings and specifications. The Contractor shall satisfy himself as to the nature and location of the work, ground surface and the characteristics of equipment and facilities needed prior to and during prosecution of the work. The Contractor shall satisfy himself as to the character, quality, and quantity of surface and subsurface materials or obstacles to be encountered. Any inaccuracies or discrepancies between the actual field conditions and the drawings, or between the drawings and specifications must be brought to the Owner's attention in order to clarify the exact nature of the work to be performed.

2. This *Geotechnical Study Report* by Converse Consultants may be used as a reference to the surface and subsurface conditions on this project. The information presented in this report is intended for use in design and is subject to confirmation of the conditions encountered during construction. The exploration logs and related information depict subsurface conditions only at the particular time and location designated on the boring logs. Subsurface conditions at other locations may differ from conditions encountered at the exploration locations. In addition, the passage of time may result in a change in subsurface conditions at the exploration locations. Any review of this information shall not relieve the

Contractor from performing such independent investigation and evaluation to satisfy himself as to the nature of the surface and subsurface conditions to be encountered and the procedures to be used in performing his work.

C1.3 Authority of the Geotechnical Engineer

1. The Geotechnical Engineer will observe the placement of compacted fill and will take sufficient tests to evaluate the uniformity and degree of compaction of filled ground.
2. As the Owner's representative, the Geotechnical Engineer will (a) have the authority to cause the removal and replacement of loose, soft, disturbed and other unsatisfactory soils and uncontrolled fill; (b) have the authority to approve the preparation of native ground to receive fill material; and (c) have the authority to approve or reject soils proposed for use in building areas.
3. The Civil Engineer and/or Owner will decide all questions regarding (a) the interpretation of the drawings and specifications, (b) the acceptable fulfillment of the contract on the part of the Contractor and (c) the matters of compensation.

C1.4 Site Clearing

1. Clearing and grubbing shall consist of the removal from building areas to be graded of all existing structures, pavement, utilities, and vegetation.
2. Organic and inorganic materials resulting from the clearing and grubbing operations shall be hauled away from the areas to be graded.

C1.5 Excavations

1. Based on observations made during our field explorations, the surficial soils can be excavated with conventional earthwork equipment.

C1.6 Preparation of Fill Areas

1. All organic material, organic soils, undocumented fill soils and demolition debris should be removed from the proposed building areas.
2. Due to compressible undocumented fill and expansive soils conditions, we recommend the planned areas of the wells, storage tank and booster pump/utility building be supported on compacted fill soils achieved through over-excavation and re-compaction. Depths of grading for remedial earthwork are anticipated to be 2 feet for the well locations, and approximately 7 to 12 feet for the storage tank and booster pump/utility building. The extent and depth of over-excavation shall be verified and approved by a geotechnical consultant during grading operations. The remedial grading should extend laterally to a distance equal to the

depth of removal, or at least 5 feet beyond the foundation/slab, whichever is greater. Over-excavation for pipelines is not needed. All loose, soft or disturbed earth materials should be removed from the bottom of excavations before placing structural fill. The actual depth of removal should be evaluated based on observations made during grading. Thickness of compacted fill underneath the buildings should not vary.

3. The subgrade in all areas to receive fill shall be scarified to a minimum depth of six (6) inches, the soil moisture adjusted between optimum and three (3) percent above optimum for fine-grained soils and within two (2) percent of optimum moisture content for granular soils, and then compacted to at least 90 percent of the laboratory maximum dry density as determined by ASTM Standard D1557 test method. Scarification may be terminated on moderately hard to hard, cemented earth materials with the approval of the Geotechnical Engineer.
4. Compacted fill may be placed on native soils that have been properly scarified and recompacted as discussed above.
5. All areas to receive compacted fill will be observed and approved by the Geotechnical Engineer before the placement of fill.

C1.7 Placement and Compaction of Fill

1. Compacted fill placed for the support of footings, slabs-on-grade, exterior concrete flatwork, and driveways will be considered structural fill. Structural fill may consist of approved on-site soils or imported fill that meets the criteria indicated below.
2. Fill consisting of selected on-site earth materials or imported soils approved by the Geotechnical Engineer shall be placed in layers on approved earth materials. Soils used as compacted structural fill shall have the following characteristics:
   a. All fill soil particles shall not exceed three (3) inches in nominal size, and shall be free of organic matter and miscellaneous inorganic debris and inert rubble.
   b. Imported fill materials shall have an Expansion Index (EI) less than 20. All imported fill should be compacted to at least 90 percent of the laboratory maximum dry density (ASTM Standard D1557) at about three (3) percent above optimum moisture for fine grained soils, and within three (3) percent of optimum for granular soils.
3. Fill soils shall be evenly spread in maximum 8-inch lifts, watered or dried as necessary, mixed and compacted to at least the density specified below. The fill shall be placed and compacted on a horizontal plane, unless otherwise approved by the Geotechnical Engineer.

4. All fill placed at the site shall be compacted to at least 90 percent of the laboratory maximum dry density as determined by ASTM Standard D1557 test method. The on-site soils shall be moisture conditioned within two (2) percent above the optimum moisture content. At least the upper 12 inches of subgrade soils underneath the concrete apron, pavement and parking areas should be compacted to a minimum of 95 percent relative compaction.
5. Fill exceeding five (5) feet in height shall not be placed on native slopes that are steeper than 5:1 horizontal:vertical (H:V). Where native slopes are steeper than 5:1 H:V, and the height of the fill is greater than five (5) feet, the fill shall be benched into competent materials. The height and width of the benches shall be at least two (2) feet.
6. Representative samples of materials being used, as compacted fill will be analyzed in the laboratory by the Geotechnical Engineer to obtain information on their physical properties. Maximum laboratory density of each soil type used in the compacted fill will be determined by the ASTM Standard D1557 compaction method.
7. Fill materials shall not be placed, spread or compacted during unfavorable weather conditions. When site grading is interrupted by heavy rain, filling operations shall not resume until the Geotechnical Engineer approves the moisture and density conditions of the previously placed fill.
8. It shall be the Grading Contractor's obligation to take all measures deemed necessary during grading to provide erosion control devices in order to protect slope areas and adjacent properties from storm damage and flood hazard originating on this project. It shall be the contractor's responsibility to maintain slopes in their as-graded form until all slopes are in satisfactory compliance with job specifications, all berms have been properly constructed, and all associated drainage devices meet the requirements of the Civil Engineer.

C1.8 Trench Backfill

The following specifications are recommended to provide a basis for quality control during the placement of trench backfill.

1. Trench excavations to receive backfill shall be free of trash, debris or other unsatisfactory materials at the time of backfill placement.
2. Trench backfill shall be compacted to a minimum relative compaction of 90 percent as per ASTM Standard D1557 test method.
3. Rocks larger than one (1) inch should not be placed within 12 inches of the top of the pipeline or within the upper 12 inches of pavement or structure subgrade. No more than 30 percent of the backfill volume shall be larger than 3/4-inch in largest dimension diameter, and rocks shall be well mixed with finer soil.

4. The pipe design engineer should select bedding material for the pipe. Bedding materials generally should have a Sand Equivalent (SE) greater than or equal to 30, as determined by the ASTM Standard D2419 test method. Trench backfill shall be compacted by mechanical methods, such as sheepsfoot, vibrating or pneumatic rollers, or mechanical tampers, to achieve the density specified herein. The backfill materials shall be brought to within three (3) percent of optimum moisture content for granular soils and between optimum and three (3) percent above optimum for fine-grained soils, then placed in horizontal layers. The thickness of uncompacted layers should not exceed eight (8) inches. Each layer shall be evenly spread, moistened or dried as necessary, and then tamped or rolled until the specified density has been achieved.
5. The contractor shall select the equipment and processes to be used to achieve the specified density without damage to adjacent ground and completed work.
6. The field density of the compacted soil shall be measured by the ASTM Standard D1556 or ASTM Standard D2922 test methods or equivalent.
7. Observation and field tests should be performed by Converse during construction to confirm that the required degree of compaction has been obtained. Where compaction is less than that specified, additional compactive effort shall be made with adjustment of the moisture content as necessary, until the specified compaction is obtained.
8. It should be the responsibility of the Contractor to maintain safe conditions during cut and/or fill operations.
9. Trench backfill shall not be placed, spread or rolled during unfavorable weather conditions. When the work is interrupted by heavy rain, fill operations shall not be resumed until field tests by the project's geotechnical consultant indicate that the moisture content and density of the fill are as previously specified.

C1.9 Observation and Testing

1. During the progress of grading, the Geotechnical Engineer will provide observation of the fill placement operations.
2. Field density tests will be made during grading to provide an opinion on the degree of compaction being obtained by the contractor. Where compaction of less than specified herein is indicated, additional compactive effort with adjustment of the moisture content shall be made as necessary, until the required degree of compaction is obtained.
3. A sufficient number of field density tests will be performed to provide an opinion to the degree of compaction achieved. In general, density tests will be performed on each one-foot lift of fill, but not less than one for each 500 cubic yards of fill place.