BIDDER'S SUBMITTAL

COMPANY: American Asphalt South, Inc.

FY2011-12 SLURRY SEAL PROGRAM, I-119

B2013-21

Honorable Mayor and Members
of the Torrance City Council
Torrance, California

Members of the Council:

In accordance with the Notice Inviting Bids pertaining to the receiving of sealed proposals by the City Clerk of the City of Torrance for the above titled improvement, the undersigned hereby proposes to furnish all Work to be performed in accordance with the Plans, Specifications, Standard Drawings, and the Contract Documents, for the unit price or lump sum set forth in the following schedule.

BID SCHEDULES

BID SCHEDULE A – RESIDENTIAL STREETS (AREAS A THRU D)

ITEM NO.	ITEM DESCRIPTION	APPROX. QTY	UNIT OF MEASURE	UNIT PRICE	TOTAL BID
1	MOBILIZATION AND DEMOBILIZATION	1	LS	$ 7,000.00	$ 7,000.00
2	TRAFFIC CONTROL	1	LS	$ 16,000.00	$ 16,000.00
3	CRACK SEAL	1	LS	$ 61,700.00	$ 61,700.00
4	CAPE SEAL (CHIP SEAL & TYPE II SLURRY SEAL WITH 2-1/2% LATEX)	1,393,500	SF	$ 0.36	$ 501,660.00
5	TYPE II SLURRY SEAL WITH 2-1/2% LATEX	3,901,000	SF	$ 0.14	$ 546,140.00
6	REMOVE EXISTING PAVEMENT STRIPING, MARKINGS, LEGENDS, AND RAISED PAVEMENT MARKERS	1	LS	$ 21,725.00	$ 21,725.00
7	INSTALL PAVEMENT STRIPING, MARKINGS, LEGENDS, AND RAISED PAVEMENT MARKERS	1	LS	$ 45,430.00	$ 45,430.00

SCHEDULE "A" SUBTOTAL: $ 1,199,655.00
(FIGURES)*

SCHEDULE "A" SUBTOTAL: One million, one hundred ninety nine thousand, six hundred Fifty Five Dollars Zero Cents
(WORDS)*

***BID MAY BE REJECTED IF SUBTOTAL BID IS NOT SHOWN IN FIGURES AND WORDS**

NOTE: Include above subtotal in the Total Bid Price for this project on page C-3.

BIDDER'S SUBMITTAL- B2013-21
(CONTINUED)

COMPANY: _____

BID SCHEDULE B REVISED– CITY PARKING FACILITIES (8 LOCATIONS)

ITEM NO.	ITEM DESCRIPTION	APPROX. QTY	UNIT OF MEASURE	UNIT PRICE	TOTAL BID
1	MOBILIZATION AND DEMOBILIZATION	1	LS	$ 1,000.00	$ 1,000.00
2	TRAFFIC CONTROL	1	LS	$ 1,250.00	$ 1,250.00
3	CRACK SEAL	1	LS	$ 7,000.00	$ 7,000.00
4	TYPE II SLURRY SEAL WITH 2-1/2% LATEX (AREAS 4 THROUGH 8)	128,000	SF	$ 0.14	$ 17,920.00
4A	**TYPE II SLURRY SEAL WITH 2-1/2% LATEX AT CITY YARD AREAS 1 & 2 (CLOSED FRIDAY AND SATURDAYS ONLY)**	**235,000**	**SF**	**$ 0.14**	**$ 32,900.00**
4B	**TYPE I SLURRY SEAL WITH 2-1/2% LATEX AT CITY HALL AREA 3 (CLOSED FRIDAY AND SATURDAYS ONLY)**	**67,000**	**SF**	**$ 0.14**	**$ 9,380.00**
5	REMOVE EXISTING PAVEMENT STRIPING, MARKINGS, LEGENDS, AND RAISED PAVEMENT MARKERS	1	LS	$ 24,000.00	$ 24,000.00
6	INSTALL PAVEMENT STRIPING, MARKINGS, LEGENDS, AND RAISED PAVEMENT MARKERS	1	LS	$ 10,500.00	$ 10,500.00
6A	INSTALL PAVEMENT STRIPING, MARKINGS, LEGENDS, AND RAISED PAVEMENT MARKERS AT CITY YARD AREAS 1 & 2 AND CITY HALL AREA 3 (CLOSED FRIDAY AND WEEKENDS ONLY)	1	LS	$ 11,750.00	$ 11,750.00
7	REMOVE AND DISPOSE EXIST WOOD WHEEL STOPS (Approx. 50 LF)	1	LS	$ 2,000.00	$ 2,000.00
8	REMOVE, STORE, AND REINSTALL EXIST CONCRETE WHEEL STOPS (Approx. 63)	1	LS	$ 6,000.00	$ 6,000.00
9	FURNISH AND INSTALL NEW CONCRETE WHEEL STOPS	50	EA	$ 55.00	$ 2,750.00

SCHEDULE "B" SUBTOTAL: $ 126,450.00

SCHEDULE "B" SUBTOTAL: One Hundred Twenty Six Thousand, Four hundred Fifty Dollars & Zero Cents

(FIGURES)* (WORDS)*

***BID MAY BE REJECTED IF SUBTOTAL BID IS NOT SHOWN IN FIGURES AND WORDS**

NOTE: Include above subtotal in the Total Bid Price for this project on page C-3.

BIDDER'S SUBMITTAL - B2013-21
(CONTINUED)

COMPANY: American Asphalt South, Inc

The Total Bid Price below shall include the 2 subtotals of Schedules A and B.

TOTAL BID PRICE FOR SCHEDULES A + B:

$ 1,326,105.00

*(FIGURES)**

TOTAL BID PRICE FOR SCHEDULES A + B:

One Million, Three hundred Twenty six thousand, one hundred Five Dollars & zero cents

*(WORDS)**

BID MAY BE REJECTED IF SUBTOTAL BID IS NOT SHOWN IN FIGURES AND WORDS

The undersigned furthermore agrees to enter into and execute a contract, with necessary bonds, at the unit prices set forth herein and in case of default in executing such contract, with necessary bonds, the check or bond accompanying this bid and the money payable thereon shall be forfeited thereby to and remain the property of the City of Torrance.

The above unit prices include all work appurtenant to the various items as outlined in the Specifications and all work or expense required for the satisfactory completion of said items. In case of discrepancies between unit prices and totals, the unit prices shall govern.

The undersigned declares that it has carefully examined the Plans, Specifications, and Contract Documents, and has investigated the site of the work and is familiar with the conditions thereon.

Contractor: American Asphalt South, Inc

Date: May 23rd, 2013 By: Lyle Shine - Secretary

Contractor's State License No.: 784989 Class: A

Address: 14936 Santa Ana Avenue
Fontana, CA 92337

Phone: (909) 427-8276 Fax: (909) 427-8279

ACKNOWLEDGMENT OF ADDENDA RECEIVED - B2013-21

The Bidder shall acknowledge the receipt of any and all addenda by placing an "X" by each addendum received.

Addendum No. 1 X

Addendum No. 2 _____

Addendum No. 3 _____

Addendum No. 4 _____

Addendum No. 5 _____

If an addendum or addenda have been issued by the City and not noted above as being received by the Bidder, the Bid Proposal may be rejected.

Bidder's Signature Lyle Stone, Secretary

Date May 23rd, 2013

CITY OF TORRANCE, CALIFORNIA

ADDENDUM NO. 1
Issued: May 15, 2013

TO

PROPOSAL, SPECIFICATIONS, BOND AND AFFIDAVIT FOR THE CONSTRUCTION OF

FY2011-12 SLURRY SEAL PROGRAM, I-119
B2013-21

Note the following changes and/or additions to the Plans and/or Specifications for the project indicated above. The bidder shall execute the Certification at the end of this addendum, and shall attach all pages of this addendum to the Contract Documents submitted with the Bid. In addition, the bidder shall fill out and submit the "Acknowledgment of Addenda Received" Form provided in Section C of the Specifications.

1. **Refer to Appendix III "List of Residential Streets Measurements and Schedule of Pavement Striping, Markings and Legends" of the project specifications and specifically to the Table named "CITY PARKING FACILITIES (8 LOCATIONS).**

   For City Parking Facilities #7 & #8, the name is hereby changed from "Columbia" to "Wilson" (see revised table below).

FY2011-12 SLURRY SEAL PROGRAM, I-119

CITY PARKING FACILITIES (8 LOCATIONS)

AREA MEASUREMENTS & WHEEL STOP INVENTORY

NO.	FACILITY NAME	AREA (SLURRY SEAL) [SF]	CRACK SEAL [YES/NO]	WHEEL STOPS: CONCRETE WHEEL STOPS TO REMAIN IN PLACE [YES/NO]	WHEEL STOPS: REMOVE, STORE, AND RE-INSTALL EXIST [EA]	WHEEL STOPS: REMOVE EXIST. WOOD WHEEL STOPS [LF]	WHEEL STOPS: INSTALL NEW CONCRETE WHEEL STOPS [EA]
1	CITY YARD - VEHICLE PARKING AREA (WEST)	116,000	NO	YES	0	0	0
2	CITY YARD - EMPLOYEE PARKING AREA (NORTH)	119,000	NO	NO	23	0	6
3	CITY HALL - EMPLOYEE PARKING AREA (NORTH)	67,000	NO	NO	40	50	25
4	VICTOR PARK / HENDERSON LIBRARY	26,700	YES	YES	0	0	6
5	LAGO SECO PARK	24,700	NO	NO	0	0	0
6	WALTERIA PARK / WALTERIA LIBRARY	11,900	YES	YES	0	0	0
7	~~COLUMBIA~~ WILSON PARK - PARKING AREA "A"	21,500	YES	NO	0	0	0
8	~~COLUMBIA~~ WILSON PARK - PARKING AREA "F"	43,000	YES	NO	0	0	0
	TOTAL =	429,800	---	---	63	50	35

2. **Refer to Appendix IV "City of Torrance and Caltrans Standard Plans for Pavement Markings" included in the project specifications and specifically to "City Of Torrance Standard Parking Striping".**

   - The "City of Torrance Standard Parking Striping" (double striped spaces) shall be installed only at City Parking Facilities #3, 4, 5, 6, 7 and 8, as listed in the table in Appendix III.

   - Parking striping for City Parking Facilities #1 and #2 shall be installed per the "City of Torrance Standard Parking Striping For City Yard Parking Facilities" now hereby added to the specifications and is hereby included with this Addendum.

3. **Refer to the Special Provisions Section 203-5, Slurry Seal, on page E-17.**

   Subsection 203-5.1 General is hereby deleted and replaced with the following:

   "**203-5.1 General.** Replace the first sentence with the following:

   Slurry seal shall be quick-set emulsion-aggregate slurry (EAS), with the addition of 2.5% latex, and is herein referred to as "Slurry."

   Type I Slurry shall be used on City Parking Facility #3, City Hall – Employee Parking Area (North).

   Type II Slurry shall be used on all residential streets and on City Parking Facilities #1, 2, 4, 5, 6, 7 and 8, as listed in the tables in Appendix III."

4. **Refer to Specifications Section C and the Bidder's Submittal Bid Schedule B on page C-2 and the Bidder's Submittal Bid Schedule B on the blue-colored paper included with the Contract Documents.**

   Bid Schedule B in the above-referenced documents is hereby deleted in its entirety and replaced with **BID SCHEDULE B REVISED– CITY PARKING FACILITIES (8 LOCATIONS)**, now hereby added to the specifications, contract documents and is hereby included with this Addendum. A bidder shall use **BID SCHEDULE B REVISED– CITY PARKING FACILITIES (8 LOCATIONS)** included with this Addendum when preparing and submitting its bid.

By Order of the Acting City Engineer

/S/ Ted Semaan

TOUFIC (TED) SEMAAN
Acting City Engineer

BIDDER'S CERTIFICATION

I acknowledge receipt of the foregoing Addendum No. 1 and accept all conditions contained therein.

American Asphalt South, Inc.
Bidder

By Lyle Stone, Secretary

May 23rd, 2013
Date

***** Submit this executed form with the bid *****

Please fill out and submit the "Acknowledgment of Addenda Received" form provided in Section C of the Specifications

CITY OF TORRANCE

STANDARD PARKING STRIPING
FOR CITY YARD PARKING FACILITIES

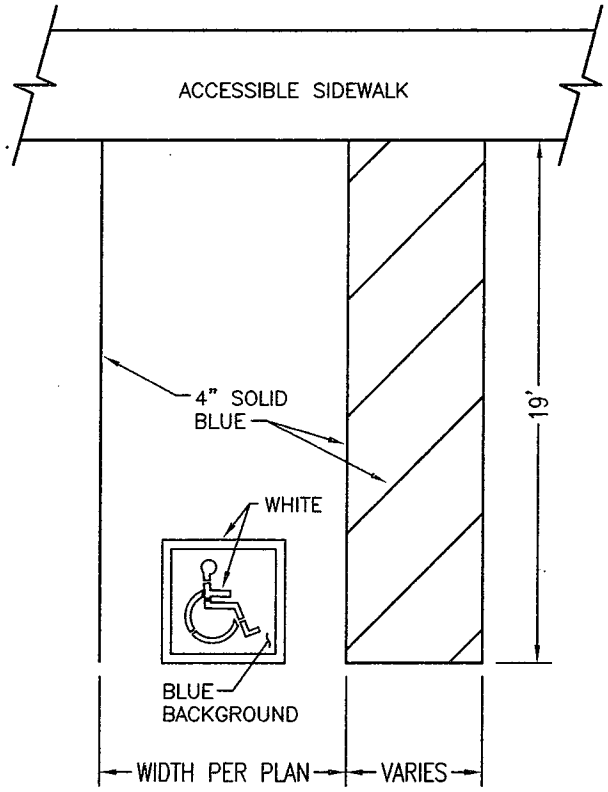

TYPICAL ADA (DISABLED) PARKING DETAILS
NO SCALE

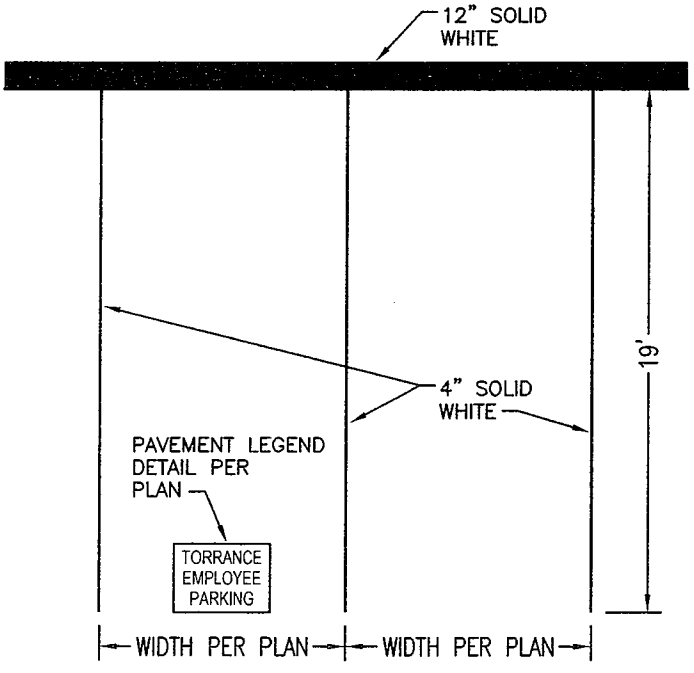

TYPICAL PARKING STALL
NO SCALE

CONTRACTOR'S AFFIDAVIT

STATE OF CALIFORNIA }
}
COUNTY OF San Bernardino }

B2013-21

Lyle Stone, being first duly sworn, deposes and says:
(NAME)

1. That he/she is the Secretary
(TITLE)
of American Asphalt South, Inc.
(NAME OF PARTNERSHIP, CORPORATION, OR SOLE PROPRIETORSHIP)

hereinafter called "Contractor," who has submitted to the City of Torrance a proposal for the Construction of FY2011-12 Slurry Seal Program, I-119, B2013-21;

2. That said proposal is genuine; that the same is not sham; that all statement of facts therein are true;

3. That such proposal was not made in the interest or behalf of any person, partnership, company, association, organization or corporation not named or disclosed;

4. That the Contractor did not, directly or indirectly, induce, solicit or agree with anyone else to submit a false or sham bid, to refrain from bidding, or to withdraw the bid, to raise or fix the bid price of the Contractor or anyone else, or to raise or fix any overhead, profit or cost element of the Contractor's price or the price of anyone else; and did not attempt to induce action prejudicial to the interest of the City of Torrance, or of any other bidder, or anyone else interested in the proposed contract;

5. That the Contractor has not in any manner sought by collusion to secure for itself an advantage over any other bidder or to induce action prejudicial to the interests of the City of Torrance, or of any other bidder or of anyone else interested in the proposed contract;

6. That the Contractor has not accepted any bid from any subcontractor or materialman through any bid depository, the bylaws, rules or regulations of which prohibit or prevent the Contractor from considering any bid from any subcontractor or materialman, which is not processed through said bid depository, or which prevent any subcontractor or materialman from bidding to any Contractor who does not use the facilities of or accept bids from or through such bid depository;

CONTRACTOR'S AFFIDAVIT
(CONTINUED)

7. That the Contractor did not, directly or indirectly, submit the Contractor's bid price or any breakdown thereof, or the contents thereof, or divulge information or data relative thereto, to any corporation, partnership, company, association, organization, bid depository, or to any member or agent thereof, or to any individual or group of Individuals, except to the City of Torrance, or to any person or persons who have a partnership or other financial interest with said Contractor in its business.

Dated this 23rd day of May, 20 13

Subscribed and Sworn to before me this 23rd day of May, 20 13

Notary Public in and for said County and State.

(SEAL)

RICHARD ENTRIKIN
COMM. #1854481
NOTARY PUBLIC - CALIFORNIA
SAN BERNARDINO COUNTY
My Comm. Expires JUL. 13, 2013
DMS2 DMS2

(CONTRACTOR'S SIGNATURE)

Lyle Stone
(NAME)

Secretary
(TITLE)

LIST OF SUBCONTRACTORS

The Bidder is required to fill in the following blanks in accordance with the provisions of the Subletting and Subcontracting Fair Practices Act (Chapter 2 of Division 5, Title 1 of the Government Code of the State of California) and should familiarize itself with Section 2-3 of the Standard Specifications.

Name Under Which Subcontractor is Licensed: American Pavement Systems

Subcontractor's Address: 1012 11th St. Suite 1000, Modesto CA 95354

Specific Description of Sub-Contract: Chip Seal

License Number: 943792 CA License Classification/Type: A, General Engineering

Name Under Which Subcontractor is Licensed: BC Traffic Specialist

Subcontractor's Address: 638 West Southern Ave, Orange CA 92865

Specific Description of Sub-Contract: remove & replace Striping, marking, Ledgwood, RPM's, & Wheel Stops

License Number: 877686 CA License Classification/Type: C 32 Parking and Highway improvements

Name Under Which Subcontractor is Licensed: _____

Subcontractor's Address: _____

Specific Description of Sub-Contract: _____

License Number: _____ CA License Classification/Type: _____

Name Under Which Subcontractor is Licensed: _____

Subcontractor's Address: _____

Specific Description of Sub-Contract: _____

License Number: _____ CA License Classification/Type: _____

Subcontractors listed must be properly licensed under the laws of the State of California for the type of work which they are to perform. Do not list alternate subcontractors for the same work.

REFERENCES

List work similar in magnitude and degree of difficulty completed by the Contractor within the past three (3) years.

1. Name (Firm/Agency): See Attached List
   Address: _____
   Contact Person: _____ Telephone No.: _____
   Title of Project: _____
   Project Location: _____
   Date of Completion: _____ Contract Amount: $ _____

2. Name (Firm/Agency): _____
   Address: _____
   Contact Person: _____ Telephone No.: _____
   Title of Project: _____
   Project Location: _____
   Date of Completion: _____ Contract Amount: $ _____

3. Name (Firm/Agency): _____
   Address: _____
   Contact Person: _____ Telephone No.: _____
   Title of Project: _____
   Project Location: _____
   Date of Completion: _____ Contract Amount: $ _____

4. Name (Firm/Agency): _____
   Address: _____
   Contact Person: _____ Telephone No.: _____
   Title of Project: _____
   Project Location: _____
   Date of Completion: _____ Contract Amount: $ _____

5. Name (Firm/Agency): _____
   Address: _____
   Contact Person: _____ Telephone No.: _____
   Title of Project: _____
   Project Location: _____
   Date of Completion: _____ Contract Amount: $ _____

REFERENCE LIST

AGENCY/CONTACT	PROJECT NAME	DOLLAR AMOUNT	DATE COMPLETED
CITY OF LA MESA MATT SOUTTERE (619)667-1171	ANNUAL STREET MAINTENANCE CITYWODE CRACKSEAL & RUBBERIZED SLURRY SEAL	$659,996.51	Jun-12
CITY OF R.SANTA MARG. MARC FERNANDEZ (949)635-1800 X6506	SLURRY SEAL PROGRAM FISCAL YEAR 11-12 (ZONE 2)	$260,182.00	Jun-12
CITY OF TEMECULA CHRIS WHITE (951)694-6411	CITYWIDE SLURRY SEAL PROJECT FY2011-2012 NO. PW11-09	$763,223.04	Aug-12
CITY OF SEAL BEACH CESAR RANGEL (562)431-2527 X1328	2012 ANNUAL SLURRY SEAL PROJECT	$99,569.14	Aug-12
CITY OF ONTARIO GARY HARMS (909)395-2130	2012 SLURRY SEAL PROGRAM AND BRIDGE REPAIR	$1,134,077.69	Aug-12
CITY OF MURRIETA KEN BURRIS (951)461-6028	CITYWIDE SLURRY SEAL PROJECT	$1,598,256.35	Sep-12
CITY OF NEWPORT BEACH ALFRED CASTANON (949)644-3311	11-12 CITYWIDE SLURRY SEAL	$722,240.20	Aug-12
CITY OF PORT HUENEME KIT NELL (805)986-6500	FY 12-13 STREET REHABILITATION	$418,048.13	Sep-12
CITY OF POWAY JEFF BEERS (858)668-4624	2012-2013 SLURRY SEAL AND HOT RUBBER CHIP SEAL PROJECT	$1,307,848.03	Oct-12

REFERENCE LIST

AGENCY/CONTACT	PROJECT NAME	DOLLAR AMOUNT	DATE COMPLETED
CITY OF ARROYO GRANDE MICHAEL LINN (805)473-5444	2012 STREET RESURFACING PROJECT	$573,475.53	Oct-12
CITY OF SAN CLEMENTE GARY VOBORSKY (949)361-6132	FY 2012 & 2013 SLURRY SEAL PROGRAM PROJECT NO. 27304	$443,775.95	Apr-13
CITY OF YUCAIPA CHUCK COLLETTE (909)797-2489	2012-2013 MICRO-SURFACING PROGRAM	$108,908.70	Feb-13
CITY OF VICTORVILLE CELESTE CALDERON (6=760)955-5082	2012 CRACK & SLURRY SEAL PROJECT	$84,989.35	Oct-12
DE LUZ COMM. ASSOC. ROB HOLMES (951)696-0060 X204	2012 SUMMER SLURRY SEAL PROJECT	$387,980.00	Nov-12
CITY OF LYNWOOD FRANK SANCHEZ (310)603-0220 X817	SLURRY SEAL IMPROVEMENTS AT VARIOUS LOCATIONS	$558,694.17	Nov-12
CITY OF DELANO ED GALERO (661)720-2221	2012 SLURRY SEAL PROJECT	$234,569.19	Dec-12
CITY OF SIGNAL HILL ANTHONY CARAVEO (562)989-7352	2013 PAVEMENT MANAGEMENT PROJECT NO. 688	$327,183.70	Nov-12
COUNTY OF RIVERSIDE WARD MAXWELL (951)955-8614	SLURRY SEAL PROJECT FOR FISCAL YEAR 2011/2012; PROJECT NO. C2-0006 & PROJECT NO. C2-0008	$2,166,097.72	Dec-12

REFERENCE LIST

AGENCY/CONTACT	PROJECT NAME	DOLLAR AMOUNT	DATE COMPLETED
CITY OF CLAREMONT VINCENT RAMOS (909)399-5395	RESIDENTIAL STREET SLURRY C.I.P. 2012-4	$903,319.85	Jan-13
CITY OF DOWNEY KEITH HOEY (562)622-5898	CASH CONTRACT NO. S.S. 638 SLURRY SEAL PROJECT AREA "C"	$244,268.88	Dec-12
CITY OF PASADENA ELVIN JIANG (626)744-6912	SLURRY SEAL OF STREETS-2012	$371,882.91	Jan-13
BELL CANYON ASSOCIATION CAROL HENDERSON (818)346-9879	2012 SLURRY SEAL PROJECT, PHASE I	$111,237.00	Feb-13
CITY OF MENIFEE RUDY LUNA (951)672-6777	2012 SLURRY SEAL PROJECT, PHASE I	$351,372.50	Feb-13
CITY OF EL SEGUNDO FLORIZA RIVERA (310)524-2360	2011-2012 FURNISHING AND APPLICATION OF SLURRY SEAL ON VARIOUS STREETS	$320,231.08	Mar-13
CITY OF SAN FERNANDO PATSY OROZCO (818)898-1224	CITYWIDE SLURRY SEAL PROGRAM FY 2011/12	$351,009.00	Mar-13
CITY OF MORENO VALLEY QUANG NGUYEN (951)413-3159	SUNNYMEAD RANCH PARKWAY SLURRY SEAL	$82,475.00	Feb-13
CITY OF RIALTO EDDIE CHAN (909)820-2651	2012/2013 ANNUAL SLURRY SEAL PROJECT CITY PROJECT NO. 130806	$631,893.22	Apr-13

REFERENCE LIST

AGENCY/CONTACT	PROJECT NAME	DOLLAR AMOUNT	DATE COMPLETED
CITY OF SAN DIEGO KIM LASELLE (619)527-5455	FY'12 GROUP I SLURRY SEAL	PENDING	IN PROGRESS
CITY OF SAN DIEGO KIM LASELLE (619)527-5455	FY'13 GROUP I SLURRY SEAL-OPTION	PENDING	IN PROGRESS
CITY OF PALM DESERT RYAN GAYLER (760)346-0611	2013 CITYWIDE SLURRY SEAL PROJECT	$1,076,060.39	May-13
CITY OF CORONADO DAVE JOHNSON (619)522-2425	STREET PREVENTIVE MAINTENANCE FY 2012-2013 PROJECT	PENDING	IN PROGRESS
CITY OF EL CAJON MIKE DUDAS (619)441-1763	STREET RESURFACING 12, RUBBERIZED SLURRY VARIOUS STREETS	PENDING	IN PROGRESS

REFERENCES
(CONTINUED)

If Contractor has not performed work for the City of Torrance within the last five (5) years, list all work done within said five years (attach additional sheets if necessary). Note if work was done as subcontractor [include only subcontract amount]:

Work Description & Contract Amount	Agency	Date Completed
See Attached List		

Contractor's License No.: 784969 Class: A

a. Date first obtained: 09/25/2000 Expiration: 09/30/2014

b. Has License ever been suspended or revoked? No

If yes, describe when and why: _____

c. Any current claims against License or Bond? No

If yes, describe claims: _____

Principals in Company (List all – attach additional sheets if necessary):

NAME	TITLE	LICENSE NO. (If Applicable)
Allan Henderson	President	784969
Jeff Petty	Vice President	
Lyle Stone	Secretary	

REFERENCE LIST

AGENCY/CONTACT	PROJECT NAME	DOLLAR AMOUNT	DATE COMPLETED
CITY OF CATHEDRAL CITY PATRICK MILOS (760)770-0390	RUBBERIZED EMULSION-AGGREGATE SLURRY (REAS) FLEX SEAL AND FLEX CAPE	$1,826,375.33	Nov-08
CITY OF RANCHO CUCAMONGA ROMEO DAVID (909)477-2740 X4070	FY 2008/2009 LOCAL STREET PAVEMENT REHABILITATION SLURRY SEAL OF VARIOUS STREETS	$576,185.42	Nov-08
CITY OF PASADENA ELVIN JIANG (626)744-6912	SLURRY SEAL OF STREETS-2008	$502,479.25	Jan-09
CITY OF YORBA LINDA JACKI NIEMI (714)961-7170	SLURRY SEAL PROGRAM FOR VARIOUS STREETS (FISCAL YEAR 2007-08 & 2008-09)	$2,226,677.89	Jun-09
COUNTY OF SAN BERN. SUNDARMOORTHY SRIRAJAN (909)387-7935	MENTONE AREA SLURRY SEALS	$65,726.10	Feb-09
CASITAS M.W.D. ANDY BENITEZ (805)649-2251 EXT 139	SLURRY SEAL & STRIPING	$111,321.25	Apr-09
CITY OF VILLA PARK JOE O'NEIL (714)998-1500	STREET MAINTENANCE PROJECT FY 2008-09	$443,003.60	Apr-09
CITY OF DES. HOT SPRINGS HAL GOLDENBERG (760)329-6411	STREET SLURRY SEAL CONSTRUCTION ON VARIOUS CITY STREETS PROJECT NO. 2009-02	$429,980.84	May-09
CITY OF CARSON RICK BOUTROS (310)952-1700	ANNUAL SLURRY SEAL PROGRAM CITYWIDE PROJECT 1301	$309,359.50	May-09

REFERENCE LIST

AGENCY/CONTACT	PROJECT NAME	DOLLAR AMOUNT	DATE COMPLETED
CITY OF LAWNDALE ALBERT MENDOZA (310)973-3261	SLURRY SEAL ON VARIOUS CITY STREETS	$120,412.81	May-09
CITY OF MONTEREY PARK VENNIE BERMUDEZ (626)307-1325	2009 SLURRY SEAL OF VARIOUS STREETS	$91,041.57	May-09
CITY OF SAN GABRIEL JASON WELDAY (909)594-9702	FISCAL YEAR 2008-09 SLURRY SEAL PROJECT	$235,332.24	Jun-09
CITY OF SAN DIEGO KIM LASELLE (619)527-5455	SLURRY SEAL GROUP I, FY 09; K094471C	$5,127,579.45	Jul-09
CITY OF MANHATTAN BEACH ISH MEDRANO (310)802-5357	2009 SLURRY SEAL PROJECT	$271,179.75	Jul-09
CITY OF ROSEMEAD RAFAEL FAJARDO (626)569-2151	ANNUAL 2008-2009 SLURRY SEAL PROJECT	$147,238.11	Aug-09
CITY OF R. CUCAMONGA ROMEO DAVID (909)477-2740 X4070	FY 2009/2010 LOCAL STREET PAVEMENT REHABILITATION (SLURRY SEAL) AND PARKING LOT RESURFACING (SEALCOAT) AT VARIOUOS LOCATIONS	$285,774.75	Aug-09
CITY OF LAGUNA NIGUEL FRANK BORGES (949)362-4325	FY 09-10 CITYWIDE ROADWAY SLURRY SEAL PROGRAM, CASH CONTRACT NO. 09-09	$1,248,754.19	Sep-09
CITY OF P.V. ESTATES FLORIZA RIVERA (310)378-0383	FY 09/10 SLURRY SEAL PROJECT	$156,045.46	Sep-09

REFERENCE LIST

AGENCY/CONTACT	PROJECT NAME	DOLLAR AMOUNT	DATE COMPLETED
CITY OF LA HABRA HEIGHTS BRUCE BARRETTE (562)694-6302	2009 ANNUAL ROAD MAINTENANCE PROJECT (ZONE 3)	$314,830.68	Sep-09
CITY OF CHINO HILLS ANNE DUTREY (909)364-2760	FY 2008-09 STREET IMPROVEMENT PROJECT PROJECT NO. S09003	$735,829.20	Oct-09
CITY OF EL CAJON MIKE DUDAS (619)441-1763	STREET RESURFACING 09 RUBBERIZED SLURRY VARIOUS STREETS	$654,426.07	Oct-09
CITY OF FONTANA KEITH KRAMER (909)350-6644	ASPHALT PAVEMENT RESTORATION PROJECT FOR VILLAGE OF HERITAGE, SOUTHRIDGE VILLAGE AND ISLAND ANNEXATION AREA III, PROJECT SB-01-PW-10	$3,276,552.14	Dec-09
CITY OF PASADENA ELVIN JIANG (626)744-6912	SLURRY SEAL OF STREETS-2009	$718,056.02	Jan-10
CITY OF RIALTO EDDIE CHAN (909)820-2651	CITYWIDE SLURRY SEAL PROGRAM 2009	$553,946.33	Jan-10
CITY OF LOMA LINDA JARB THAIPEJR (909)799-2810	PAVEMENT REHABILITATION BY SLURRY SEAL METHOD AT VARIOUS LOCATIONS (PHASE VIII)	$221,825.21	Apr-10
CITY OF PALM SPRINGS MICHAEL LYTAR (760)323-8253	2009-10 ANNUAL SLURRY SEAL PROJECT #09-13	$520,103.93	May-10
CITY OF SANTA ANA EDWARD TORRES (714)647-5018	LOCAL STREET SLURRY SEAL	$146,289.34	May-10

REFERENCE LIST

AGENCY/CONTACT	PROJECT NAME	DOLLAR AMOUNT	DATE COMPLETED
CITY OF RANCHO MIRAGE WILLIAM ENOS (760)770-3224	RUBBERIZED EMULSION-AGGREGATE SLURRY; CITY PROJECT # CP 08-242	$911,155.05	Jun-10
CITY OF EL CAJON MIKE DUDAS (619)441-1763	STREET RESURFACING 2010 RUBBERIZED SLURRY	$489,563.13	Jul-10
CITY OF CYPRESS NICK MANGKALAKIRI (714)229-6729	2009/2010 SLURRY SEAL PROJECT	$1,453,581.68	Sep-10
CITY OF NEWPORT BEACH ALFRED CASTANON (949)644-3314	2009-2010 CITYWIDE SLURRY SEAL	$378,781.98	Sep-10
CITY OF ONTARIO GARY HARMS (909)395-2130	CITY OF ONTARIO 2010 SLURRY SEAL PROGRAM	$1,476,675.55	Jan-11
CITY OF MANHATTAN BEACH ISH MEDRANO (310)802-5000	2010 SLURRY SEAL PROJECT	$289,763.00	Nov-10
CITY OF SAN DIEGO KIM LASELLE (619)527-5455	OPTION RENEWAL-SLURRY SEAL GROUP II, FY 09	$4,807,421.90	Dec-10
CITY OF SAN BERNARDINO RANDY KUETLE (909)384-5020	2010 SLURRY SEAL SERVICES	$551,578.96	Aug-10
CITY OF POWAY JEFF BEERS (858)668-4624	2010-2011 SLURRY SEAL AND ARAM PROJECT	$1,094,577.55	Sep-10

REFERENCE LIST

AGENCY/CONTACT	PROJECT NAME	DOLLAR AMOUNT	DATE COMPLETED
COUNTY OF SAN BERN. NIDHAM AL-AYES (909)387-7920	SAN BERNARDINO AREA SLURRY SEALS	$125,329.13	Sep-10
CITY OF LA MESA MATT SOUTTERE (619)667-1171	ANNUAL STREET MAINTENANCE CITYWIDE- CRACK SEALING AND RUBBERIZED SLURRY COATING OF VARIOUS STREETS	$458,508.53	Aug-10
CITY OF YUCAIPA CHARLES COLLETT (909)797-2489	2010-2011 SLURRY SEAL PROGRAM; 10817	$241,936.94	Sep-10
CITY OF PALMDALE DAVID WU (661)267-5300	PROJECT NO. 621-E; COMPLETION OF ANAVERDE PHASE I IMPROVEMENTS RUBBERIZED EMULSION-AGGREGATE SLURRY	$261,578.00	Dec-10
CITY OF ROSEMEAD RAFAEL FAJARDO (626)569-2151	ANNUAL 2009-10 SLURRY SEAL PROJECT	$222,687.95	Sep-10
COUNTY OF SAN BERN. GREG BACON (909)387-5940	CSA 70-G TYPE II RAP SLURRY SEAL WRIGHTWOOD	$61,304.00	Sep-10
CITY OF TEMECULA CHRIS WHITE (951)694-6411	CITYWIDE SLURRY SEAL PROJECT FY 2009-10	$231,705.62	Oct-10
CITY OF PALM DESERT RYAN GAYLER (760)346-0611	2011 CITYWIDE SLURRY SEAL PROJECT PROJECT NO. 751-11	$939,324.90	Dec-10
CITY OF R. SANTA MARG. MARC FERNANDEZ (949)635-1800 X6506	SLURRY SEAL PROGRAM FISCAL YEAR 2010-11	$296,815.00	Nov-10

REFERENCE LIST

AGENCY/CONTACT	PROJECT NAME	DOLLAR AMOUNT	DATE COMPLETED
CITY OF SAN CLEMENTE GARY VOBORSKY (949)361-6132	FY 2011 SLURRY SEAL PROGRAM	$215,666.01	Jan-11
L.A. COUNTY HAKIM HAKIM (626)458-3122	PROJECT NO. APT5080437; BRACKETT FIELD AIRPORT SLURRY SEAL	$378,003.93	Mar-11
CITY OF P.V. ESTATES FLORIZA RIVERA (310)378-0383	FY 10/11 SLURRY SEAL PROJECT PROJECT PW-573-10	$288,518.57	Nov-10
CITY OF LOMA LINDA JARB THAIPEJR (909)799-2810	PAVEMENT REHABILITATION BY SLURRY SEAL METHOD AT VARIOUS LOCATIONS (PHASE IX)	$183,225.19	Jan-11
CITY OF SEAL BEACH CESAR RANGEL (562)431-2527 X1328	2010 ANNUAL SLURRY SEAL	$120,776.65	Dec-10
CITY OF YORBA LINDA JACKI NIEMI (714)961-7170	SLURRY SEAL PROGRAM FOR VARIOUS STREETS (FISCAL YEARS 2009-10 & 2010-11)	$2,137,918.51	Jan-11
CITY OF COLTON AFTAB HUSSAIN (909)370-5065	2010-2011 SLURRY SEAL PROJECT ON VARIOUS CITY STREETS IN COLTON	$187,784.00	Mar-11
CITY OF TWENTYNINE PALMS DANNY CHOW (760)367-6799	2010 CITY-WIDE SLURRY SEAL	$296,125.30	Mar-11
CITY OF HOLTVILLE JUNY MARMOLEJO (760)337-3883	STREET MAINTENANCE PROJECT-2011 THG PROJECT NO. 116.33OE	$303,470.80	Apr-11

REFERENCE LIST

AGENCY/CONTACT	PROJECT NAME	DOLLAR AMOUNT	DATE COMPLETED
CITY OF ALISO VIEJO SHAUN PELLETIER (949)425-2533	FY 2010-11 SLURRY SEAL AND REHABILITATION PROJECT: 2010-064	$544,460.48	Jun-11
TOWN OF APPLE VALLEY RICHARD PEDERSEN (760)240-7000 X7352	MICRO SURFACE 2010-11 PROJECT NO. 2010-04	$955,797.23	Jun-11
CITY OF WALNUT NATALIE AVILA (909)594-9702	2010-11 MAINTENANCE AREA 4 SLURRY SEAL PROGRAM	$556,264.98	Jun-11
CITY OF RAN. CUCAMONGA ROMEO DAVID (909)477-2740 X4070	FY 2010/2011 LOCAL STREET PAVEMENT REHABILITAION (SLURRY SEAL) AT VARIOUS LOCATIONS	$271,582.40	Jul-11
CITY OF STANTON DANE BENNETT (714)379-9222 X205	FY 10-11 SLURRY SEAL PROJECT	$159,200.00	Jun-11
CITY OF NEWPORT BEACH ALFRED CASTANON (949)644-3314	2010-2011 CITYWIDE SLURRY SEAL	$553,416.42	Sep-11
CITY OF EL CAJON MIKE DUDAS (619)441-1763	STREET RESURFACING 09 RUBBERIZED SLURRY VARIOUS STREETS	$636,822.86	Jul-11
CITY OF CLAREMONT VINCENT RAMOS (909)399-5395	RESIDENTIAL STREET RESURFACING	$903,221.17	Aug-11
CITY OF LA MESA MATT SOUTTERE (619)667-1171	ANNUAL STREET MAINTENANCE CITYWIDE-CRACK SEALING AND RUBBERIZED SLURRY COATING OF VARIOUS STREETS	$461,795.00	Aug-11

REFERENCE LIST

AGENCY/CONTACT	PROJECT NAME	DOLLAR AMOUNT	DATE COMPLETED
CITY OF ONTARIO GARY HARMS (909)395-2130	CITY OF ONTARIO 2011 SLURRY SEAL AND BRIDGE REPAIR PROJECT	$997,809.30	Aug-11
CITY OF POWAY JEFF BEERS (858)668-4624	2011-2012 SLURRY SEAL AND TERMINAL BLEND CHIP SEAL PROJECT	$1,007,239.43	Oct-11
CITY OF VILLA PARK JOE O'NEILL (714)998-1500	STREET MAINTENANCE PROJECT FY 2010-2011	$259,971.45	Jul-11
CITY OF TEMECULA CHRIS WHITE (951)308-6388	CITYWIDE SLURRY SEAL FY 2010-11 PROJECT NO. PW11-02	$318,235.49	Aug-11
CITY OF LA QUINTA LEONARD ST. SAUVER (760)777-7048	FISCAL YEAR 2010/2011 SLULRRY SEAL PROGRAM	$876,303.09	Sep-11
CITY OF CORONADO JIM NEWTON (619)522-7313	STREET PREVENTIVE MAINTENANCE FY 2010-2011 PROJECT; 10-CO-ES-438	$194,085.20	Sep-11
CITY OF YUCAIPA CHARLES COLLETT (909)797-2489	2011-2012 MICRO-SURFACING PROGRAM	$44,184.74	Sep-11
CITY OF GLENDALE ANDRE HAGHVERDIAN (818)548-3970	FISCAL YEAR 2010-2011 SLURRY SEAL PROGRAM	$504,090.86	Oct-11
CITY OF ARROYO GRANDE MICHAEL LINN (805)473-5444	2011 STREET RESURFACING PROJECT PW 2011-06	$500,804.90	Dec-11

REFERENCE LIST

AGENCY/CONTACT	PROJECT NAME	DOLLAR AMOUNT	DATE COMPLETED
CITY OF DOWNEY KEITH HOEY (562)622-5898	SLURRY SEAL PROJECT AREA "B" & REMAINDER OF AREA "A"; CASH CONTRACT NO. SS 633	$269,111.75	Nov-11
CO. OF SAN BERNARDINO NIDHAM AL-RAYES (909)387-1831	BIG BEAR & MOONRIDGE AREA SLURRY SEAL	$131,042.64	Nov-11
DE LUZ COMMUNITY ROB HOLMES (951)696-0060 X204	2011 CRACK AND SLURRY SEAL PROJECT	$219,827.00	Nov-11
CITY OF LOMPOC MICHAEL LUTHER (805)875-8272	2011 SLURRY SEAL PROJECT; CITY PROJECT NO. FY-11-S-3	$901,168.02	Jan-12
CITY OF RAN. CUCAMONGA ROMEO DAVID (909)477-2740 X4070	FY 2011/2012 LOCAL STREET PAVEMENT REHABILITATION (SLURRY SEAL) AT VARIOUS LOCATIONS	$353,144.85	Dec-11
CITY OF MURRIETA KEN BURRIS (951)461-6028	TIRE RUBBER MODIFIED SLURRY SEAL (TRMSS) DEMONSTRATION PROJECT	$66,937.41	Dec-11
CITY OF LOMA LINDA ELEAZAR RUBALCAVA (909)799-4440	PAVEMENT REHABILITATION BY SLURRY SEAL METHOD AT REDLANDS BLVD, MT. VIEW AVE, BEAUMONT AVE AND POPLAR AVE	$288,149.24	Dec-11
CITY OF SAN DIEGO KIM LASELLE (619)527-5455	FY "10 GROUP V SLURRY SEAL PROJECT K-11-5268-DBB-C	$2,493,474.94	Mar-12
CITY OF SAN DIEGO KIM LASELLE (619)527-5455	FY "10 GROUP VI SLURRY SEAL PROJECT K-11-5269-DBB-C	$1,683,521.22	Mar-12

REFERENCE LIST

AGENCY/CONTACT	PROJECT NAME	DOLLAR AMOUNT	DATE COMPLETED
CITY OF SAN DIEGO KIM LASELLE (619)527-5455	FY "10 GROUP III SLURRY SEAL PROJECT K-11-5324-DBB-C	$1,912,819.15	Apr-12
COUNTY OF ORANGE TED DANG (714)667-8831	CRACK SEAL OF VARIOOUS STREETS FY 2011-12	$159,726.40	Apr-12
COUNTY OF RIVERSIDE WARD MAXWELL (951)955-8614	SLURRY SEAL PROJECT FOR FISCAL YEAR 2011/2012	$1,423,280.77	May-12
CITY OF SAN DIEGO KIM LASELLE (619)527-5455	FY "11 GROUP VI SLURRY SEAL PROJECT K-11-5269-DBB-C	$2,743,246.27	Sep-12
CITY OF SAN DIEGO KIM LASELLE (619)527-5455	FY "11 GROUP VII SLURRY SEAL PROJECT K-11-5471-DBB-C	$3,012,363.16	Sep-12
CITY OF SAN DIEGO KIM LASELLE (619)527-5455	FY "11 GROUP VIII SLURRY SEAL PROJECT K-11-5472-DBB-C	$3,004,461.96	Sep-12
CITY OF ALISO VIEJO SHAUN PELLETIER (949)425-2533	FY 2011-12 SLURRY SEAL AND REHABILITATION	$637,625.36	May-12
CITY OF CORONADO KATIE ODIORNE (619)522-7384	STREET PREVENTIVE MAINTENANCE FY 11/12 PROJECT	$233,096.60	May-12
COUNTY OF SAN BERN. GARY MARTIN (760)962-1521	TYPE II SLURRY SEAL AT EQUESTRIAN TRACT 8032 IN COUNTY SERVICE AREA 64	$51,019.36	May-12

REFERENCE LIST

AGENCY/CONTACT	PROJECT NAME	DOLLAR AMOUNT	DATE COMPLETED
CITY OF LA MESA MATT SOUTTERE (619)667-1171	ANNUAL STREET MAINTENANCE CITYWODE CRACKSEAL & RUBBERIZED SLURRY SEAL	$659,996.51	Jun-12
CITY OF R.SANTA MARG. MARC FERNANDEZ (949)635-1800 X6506	SLURRY SEAL PROGRAM FISCAL YEAR 11-12 (ZONE 2)	$260,182.00	Jun-12
CITY OF TEMECULA CHRIS WHITE (951)694-6411	CITYWIDE SLURRY SEAL PROJECT FY2011-2012 NO. PW11-09	$763,223.04	Aug-12
CITY OF SEAL BEACH CESAR RANGEL (562)431-2527 X1328	2012 ANNUAL SLURRY SEAL PROJECT	$99,569.14	Aug-12
CITY OF ONTARIO GARY HARMS (909)395-2130	2012 SLURRY SEAL PROGRAM AND BRIDGE REPAIR	$1,134,077.69	Aug-12
CITY OF MURRIETA KEN BURRIS (951)461-6028	CITYWIDE SLURRY SEAL PROJECT	$1,598,256.35	Sep-12
CITY OF NEWPORT BEACH ALFRED CASTANON (949)644-3311	11-12 CITYWIDE SLURRY SEAL	$722,240.20	Aug-12
CITY OF PORT HUENEME KIT NELL (805)986-6500	FY 12-13 STREET REHABILITATION	$418,048.13	Sep-12
CITY OF POWAY JEFF BEERS (858)668-4624	2012-2013 SLURRY SEAL AND HOT RUBBER CHIP SEAL PROJECT	$1,307,848.03	Oct-12

REFERENCE LIST

AGENCY/CONTACT	PROJECT NAME	DOLLAR AMOUNT	DATE COMPLETED
CITY OF ARROYO GRANDE MICHAEL LINN (805)473-5444	2012 STREET RESURFACING PROJECT	$573,475.53	Oct-12
CITY OF SAN CLEMENTE GARY VOBORSKY (949)361-6132	FY 2012 & 2013 SLURRY SEAL PROGRAM PROJECT NO. 27304	$443,775.95	Apr-13
CITY OF YUCAIPA CHUCK COLLETTE (909)797-2489	2012-2013 MICRO-SURFACING PROGRAM	$108,908.70	Feb-13
CITY OF VICTORVILLE CELESTE CALDERON (6=760)955-5082	2012 CRACK & SLURRY SEAL PROJECT	$84,989.35	Oct-12
DE LUZ COMM. ASSOC. ROB HOLMES (951)696-0060 X204	2012 SUMMER SLURRY SEAL PROJECT	$387,980.00	Nov-12
CITY OF LYNWOOD FRANK SANCHEZ (310)603-0220 X817	SLURRY SEAL IMPROVEMENTS AT VARIOUS LOCATIONS	$558,694.17	Nov-12
CITY OF DELANO ED GALERO (661)720-2221	2012 SLURRY SEAL PROJECT	$234,569.19	Dec-12
CITY OF SIGNAL HILL ANTHONY CARAVEO (562)989-7352	2013 PAVEMENT MANAGEMENT PROJECT NO. 688	$327,183.70	Nov-12
COUNTY OF RIVERSIDE WARD MAXWELL (951)955-8614	SLURRY SEAL PROJECT FOR FISCAL YEAR 2011/2012; PROJECT NO. C2-0006 & PROJECT NO. C2-0008	$2,166,097.72	Dec-12

REFERENCE LIST

AGENCY/CONTACT	PROJECT NAME	DOLLAR AMOUNT	DATE COMPLETED
CITY OF CLAREMONT VINCENT RAMOS (909)399-5395	RESIDENTIAL STREET SLURRY C.I.P. 2012-4	$903,319.85	Jan-13
CITY OF DOWNEY KEITH HOEY (562)622-5898	CASH CONTRACT NO. S.S. 638 SLURRY SEAL PROJECT AREA "C"	$244,268.88	Dec-12
CITY OF PASADENA ELVIN JIANG (626)744-6912	SLURRY SEAL OF STREETS-2012	$371,882.91	Jan-13
BELL CANYON ASSOCIATION CAROL HENDERSON (818)346-9879	2012 SLURRY SEAL PROJECT, PHASE I	$111,237.00	Feb-13
CITY OF MENIFEE RUDY LUNA (951)672-6777	2012 SLURRY SEAL PROJECT, PHASE I	$351,372.50	Feb-13
CITY OF EL SEGUNDO FLORIZA RIVERA (310)524-2360	2011-2012 FURNISHING AND APPLICATION OF SLURRY SEAL ON VARIOUS STREETS	$320,231.08	Mar-13
CITY OF SAN FERNANDO PATSY OROZCO (818)898-1224	CITYWIDE SLURRY SEAL PROGRAM FY 2011/12	$351,009.00	Mar-13
CITY OF MORENO VALLEY QUANG NGUYEN (951)413-3159	SUNNYMEAD RANCH PARKWAY SLURRY SEAL	$82,475.00	Feb-13
CITY OF RIALTO EDDIE CHAN (909)820-2651	2012/2013 ANNUAL SLURRY SEAL PROJECT CITY PROJECT NO. 130806	$631,893.22	Apr-13

VIOLATIONS OF FEDERAL, STATE OR LOCAL LAWS

1. Has your firm or its officers been assessed any penalties by an agency for noncompliance or violations of Federal, State or Local labor laws and/or business or licensing regulations within the past five (5) years relating to your construction projects?

   Yes/No: No Federal/State: _____

   If "yes," identify and describe, (including agency and status): _____

   _____

   _____

   _____

   _____

   Have the penalties been paid? Yes/No: _____

2. Does your firm or its officers have any ongoing investigations by any public agency regarding violations of the State Labor Code, California Business and Professions Code or State Licensing Laws?

   Yes/No: NO Code/Laws: _____ Section/Article: _____

   If "yes," identify and describe, (including agency and status): _____

   _____

   _____

   _____

   _____

DEBARMENT AND SUSPENSION CERTIFICATION

TITLE 49, CODE OF FEDERAL REGULATIONS, PART 29

The bidder, under penalty of perjury, certifies that, except as noted below, he/she or any other person associated therewith in the capacity of owner, partner, director, officer, manager:

- is not currently under suspension, debarment, voluntary exclusion, or determination of ineligibility by any Federal AGENCY;
- has not been suspended, debarred, voluntarily excluded or determined ineligible by any Federal AGENCY within the past 3 years;
- does not have a proposed debarment pending; and
- has not been indicted, convicted, or had a civil judgment rendered against it by a court of competent jurisdiction in any matter involving fraud or official misconduct within the past 3 years.

If there are any exceptions to this certification, insert the exceptions in the following space.

Exceptions will not necessarily result in denial of award, but will be considered in determining bidder responsibility. For any exception noted above, indicate below to whom it applies, initiating AGENCY, and dates of action.

Notes: Providing false information may result in criminal prosecution or administrative sanctions.

The above certification is part of the Proposal. Signing this Proposal on the signature portion thereof shall also constitute signature of this Certification.